University of Tennessee, Knoxville
TRACE: Tennessee Research and Creative Exchange

Masters Theses | Graduate School

8-2004

Systems Calibration, Testing, and Preflight Preparations of a Reusable Launch Vehicle Subscale Model for a Parameter Determination Flight Program

James Michael Rigsby
University of Tennessee, Knoxville

Follow this and additional works at: https://trace.tennessee.edu/utk_gradthes

Part of the Aviation Commons

Recommended Citation

Rigsby, James Michael, "Systems Calibration, Testing, and Preflight Preparations of a Reusable Launch Vehicle Subscale Model for a Parameter Determination Flight Program. " Master's Thesis, University of Tennessee, 2004.
https://trace.tennessee.edu/utk_gradthes/4801

This Thesis is brought to you for free and open access by the Graduate School at TRACE: Tennessee Research and Creative Exchange. It has been accepted for inclusion in Masters Theses by an authorized administrator of TRACE: Tennessee Research and Creative Exchange. For more information, please contact trace@utk.edu.

To the Graduate Council:

I am submitting herewith a thesis written by James Michael Rigsby entitled "Systems Calibration, Testing, and Preflight Preparations of a Reusable Launch Vehicle Subscale Model for a Parameter Determination Flight Program." I have examined the final electronic copy of this thesis for form and content and recommend that it be accepted in partial fulfillment of the requirements for the degree of Master of Science, with a major in Aviation Systems.

Ralph Kimberlin, Major Professor

We have read this thesis and recommend its acceptance:

Peter Solies, Richard J. Ranaudo

Accepted for the Council:
Carolyn R. Hodges

Vice Provost and Dean of the Graduate School

(Original signatures are on file with official student records.)

To the Graduate Council:

I am submitting herewith a thesis written by James Michael Rigsby entitled "Systems Calibration, Testing, and Preflight Preparations of a Reusable Launch Vehicle Subscale Model for a Parameter Determination Flight Program". I have examined the final paper copy of this thesis for form and content and recommend that it be accepted in partial fulfillment of the requirements for the degree of Master of Science, with a major in Aviation Systems.

Ralph D. Kimberlin

Ralph Kimberlin, Major Professor

We have read this thesis and recommend its acceptance:

Peter Solies

Richard J Ranaudo

Acceptance for the Council:

Vice Chancellor and Dean of Graduate Studies

Thesis
2004
.R54

SYSTEMS CALIBRATION, TESTING, AND PREFLIGHT PREPARATIONS OF A REUSABLE LAUNCH VEHICLE SUBSCALE MODEL FOR A PARAMETER DETERMINATION FLIGHT PROGRAM

A Thesis
Presented for the
Master of Science
Degree
The University of Tennessee, Knoxville

James Michael Rigsby
August 2004

Dedication

This thesis is dedicated to my parents, Jim and Hazel Rigsby, great role models and friends, and my sister and brother-in-law, Roseanne Havron and Jim Havron, and the rest of the family, for always believing in me, inspiring me, and encouraging me to reach higher in order to achieve my goals.

Acknowledgements

I wish to thank all those who helped me complete my Master of Science degree in Aviation Systems. I would like to thank Dr. Kimberlin and Dr. Solies for their guidance and encouragement to pursue the UTSI-RWTH Fellowship that allowed me to conduct this research at the Lehrstuhl für Flugdynamik, Rheinisch Westfälische Technische Hochshule, Aachen, Germany. I would like to especially thank Professor Alles and Mr. Kirschstein for their guidance and kindness during my time in Aachen. I would also like to thank Mr. Ranaudo for his guidance and encouragement, and for serving on my committee.

Lastly, I would like to thank my family and friends, whose suggestions and encouragement made this work possible.

Abstract

The European space community, having recognized the need for reliable and affordable space access, has identified two reusable vehicle concepts for future autonomous access to space. One of these concepts is the horizontally launched and landed "Hopper". Various European agencies are participating in the development of the concept including the Technical University of Aachen, Germany.

The purpose of this work was to prepare and test the subscale vehicle for the flight test program conducted at the Technical University of Aachen (RWTH). The work was part of a larger project to create and demonstrate the technology required for reusable autonomous space access. The "Phoenix" project is a joint effort involving the German government, industry, and the Technical Universities of Aachen, Munich, and Stuttgart.

The Phoenix geometry is typical for space-plane configurations, having a low aspect ratio, low wing area, and a slender body. The model was equipped with an onboard telemetry system, so as to record flight data through the use of a MatLab® program and Simulink® simulation, as well as a dSPACE® real-time processor and ControlDesk® software.

This work included the calibration of the air system, determination of the moments of inertia of the model, calibration of the control surfaces, and cooperative work in testing hardware and software, as well as flight-tests planning. The air system calibration took place in the wind tunnel at RWTH with the goal being to develop angle of attack, angle of sideslip, dynamic and static pressure relations based on the installed instrumentation. The moments of inertia were determined for the purpose of calculating aerodynamic moments from the differentiated time histories of the rotation rates. The control surface calibrations were developed in order to input the excitation deflections, and to create a correlation of the measured potentiometer values versus degrees of actual deflection. It was also necessary to test all functions including field testing of the transmitter, telemetry system, and static pressure system. Radio interference and range problems were also addressed during this phase. A summary of the status of the program and some of the possible challenges are included in the conclusions and recommendations sections.

Table of Contents

1. Introduction 1

2. Physical Description 3

3. Instrumentation Overview 5

4. Center of Gravity Location 7

5. Experimental Determination of the Moments of Inertia 9

6. Air System Calibration 15

7. Control Surface Deflection Calibration 21

8. Description of Flight Tests 27

9. Conclusions 29

10. Recommendations 31

References 32

Appendices 35

Appendix A. Experimental Data 36

Appendix B. MatLab Programs 38

Vita 45

List of Tables

Table 1: Phoenix Reference Dimensions 4

Table 2: Experimentally Determined Moments and Product of Inertia..... 13

Table 3: Wind Tunnel Test Conditions for Air System Calibration..... 16

Table 4: Control Surface Deflection Limits 21

Table 5: Static Pressure Calibration Raw Data 37

List of Figures

Figure 1. The Phoenix 3

Figure 2. Dimensioned Line Drawing of the Phoenix, [mm] 4

Figure 3. Instrumentation Assembly 5

Figure 4. Equations for Moments and Product of Inertia Calculation 10

Figure 5. Experimental Determination of I_x 11

Figure 6. Experimental determination of I_y 11

Figure 7. Experimental Determination of I_z. 12

Figure 8. Experimental Determination of I_{xz}. 12

Figure 9. Air system Five-Hole Probe 15

Figure 10. Model and Model Support System 16

Figure 11. Simplified Air System Simulink® Model 19

Figure 12. Determination of Control Surface Deflection Calibration. 22

Figure 13. Experimental Determination of Rudder Calibration 22

Figure 14. Simulink® Model for Control Surface Calibration 23

Figure15. Simulink® Model for Verification of Control Surface Data 24

Figure 16. Simulink® Subsystem Utilizing Look-Up Tables Measured Data 25

Figure 17. Control Surface "1123" Input Signal 27

List of Symbols and Abbreviations

b_{ref}	span reference length, [m]
F_B	body fixed coordinate system
I_x, I_y, I_z	moment of inertia with respect to subscript axis, [kg·m^2]
I_{xz}	product of inertia with respect to subscript plane, [kg·m^2]
L	vehicle lift, N, or pendulum length, [m]
L^*	pendulum length in product of inertia experiment, [m]
L_{ref}	body reference length, [m]
q	pitch rate [deg /s]
$\bar{q}$	dynamic pressure, [Pa, mm of H_2O, mm of Hg]
r	yaw rate [deg/s]
S	wing area, [m^2]
T	period of oscillation, [seconds]
u	scalar x component of **V** in F_B
v	scalar y component of **V** in F_B
V	vehicle velocity vector
V	vehicle velocity, [m/s]
W	weight, [N]
α	angle of attack of body zero lift line
β	angle of sideslip
δ_a	angle of aileron deflection (elevons)

δ_r	angle of rudder deflection
η	angle of elevator deflection (elevons)
θ	pitch angle [deg]

1. Introduction

The European space community has recognized that the need for reliable and affordable access to space is rising. Sources cite the increase in space commercialization as a continuing trend [4]. They have also recognized the importance of maintaining Europe's competitive position in the medium and long term. The response has been to develop cost-efficient concepts to carry payloads into orbit. One such concept is the Hopper. This concept is being developed jointly by various organizations in Europe including the European Space Agency and EADS Astrium. The German contribution to the program is the ASTRA program under the direction of the German Aerospace Center (DLR). The Technical Universities of Aachen, Munich, and Stuttgart, and the University of Bremen are participating through various research grants from the DLR.

The Hopper concept is an autonomous, horizontally launched vehicle design to deliver it's payload to space, and return to land horizontally. The vehicle is similar in appearance to the US space shuttle, but is unmanned, and designed for a high degree of reusability with a relatively low mission cost [4].

The German ASTRA program has a broad scope relating to the development of the concept. In general it seeks to construct and test a technology demonstrator and to gain system competence for autonomous access to space [4]. As well as the creation and maintenance of the transport vehicle system, ASTRA also has broad activities regarding ground facilities and payload delivery systems [4].

The technical University in Aachen, Germany is participating in the ASTRA program by developing and testing subscale models of the Hopper designated the "Phoenix". To date, two Phoenix models have been built. The first was used exclusively for wind tunnel testing. This model was used to investigate aerodynamic derivatives using both linear and nonlinear aerodynamic models. The second Phoenix model was constructed for flight (drop) tests to verify the wind tunnel data, verify the autopilot-controller, and to investigate and develop the technology of autonomous flight. This second model was instrumented and equipped with an onboard telemetry system that together, with the ground based autopilot, allowed the Phoenix to be controlled while longitudinal and lateral motions were excited. Preparation for these flight tests is the subject of this work. The project is under the direction of the Chair of Flight Dynamics, Professor Wolfgang Alles, and in totality constitutes the doctoral dissertation of Dipl. Ing. Stefan Kirschstein.

2. Physical Description

The Phoenix model used throughout this work was a subscale model of the proposed Phoenix Demonstrator. Figure 1 is a photograph of the model, and Figure 2 is a line drawing showing dimensions in millimeters, and the design location of the center of gravity. The model was constructed with layers of carbon and glass fiber-reinforced plastic. It was a delta wing configuration with a slender body and low aspect ratio. Table 1 lists some of the important parameters for Phoenix.

The model utilizes six control surfaces. Yaw control was accomplished with a rudder on the vertical fin. Rudder deflection with the trailing edge to the left was defined as $\delta_r > 0$. Pitch control was accomplished with the elevons, trailing edge downward defined as $\eta > 0$. At the beginning of each flight test, the model was trimmed in pitch with the elevons, then the required moment was transferred to the body-flap, and the elevons were returned to zero deflection. Roll control was also accomplished with the elevons. The outboard elevons are the primary pitch and roll controls, with the inboard elevons providing additional inputs when large moments were required. Downward deflection of the right surface, creating a roll to the left was defined as $\delta > 0$.

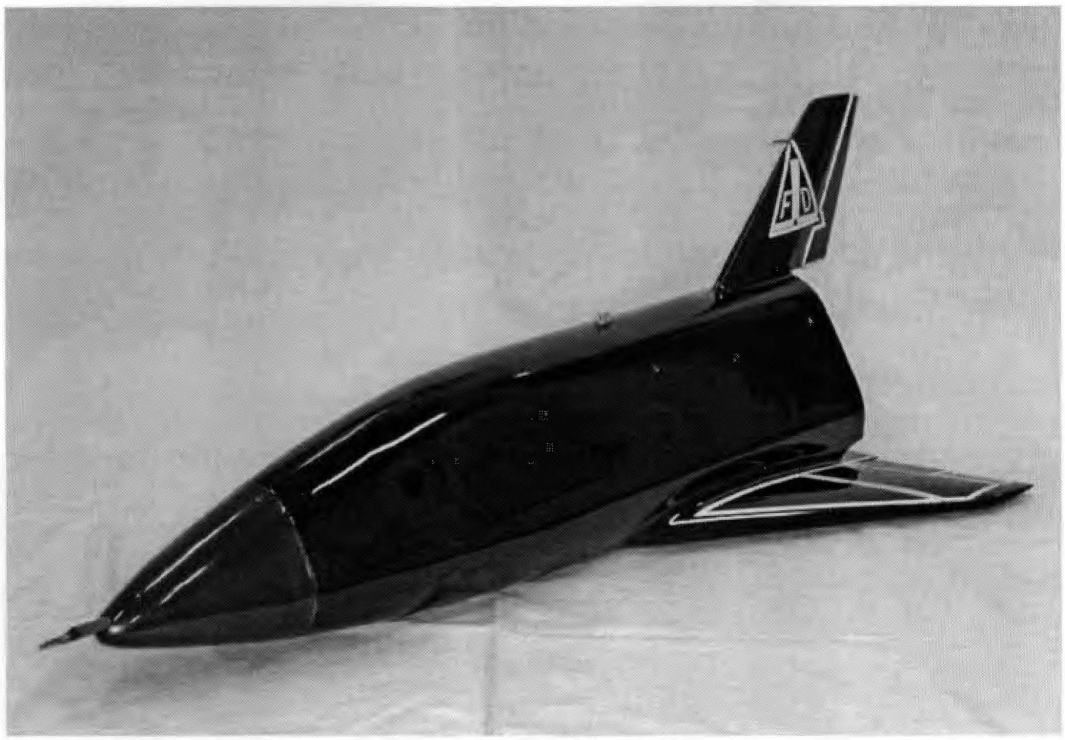

Figure 1. The Phoenix

Table 1: Phoenix Reference Dimensions

Reference Length – Longitudinal , L	0.857 m
Reference Length – Lateral, b	0.497 m
Wing Area, S	0.210 m^2
Sweep Angle of Leading Edge	61 degrees
Aspect Ratio	1.18
Dihedral Angle	0

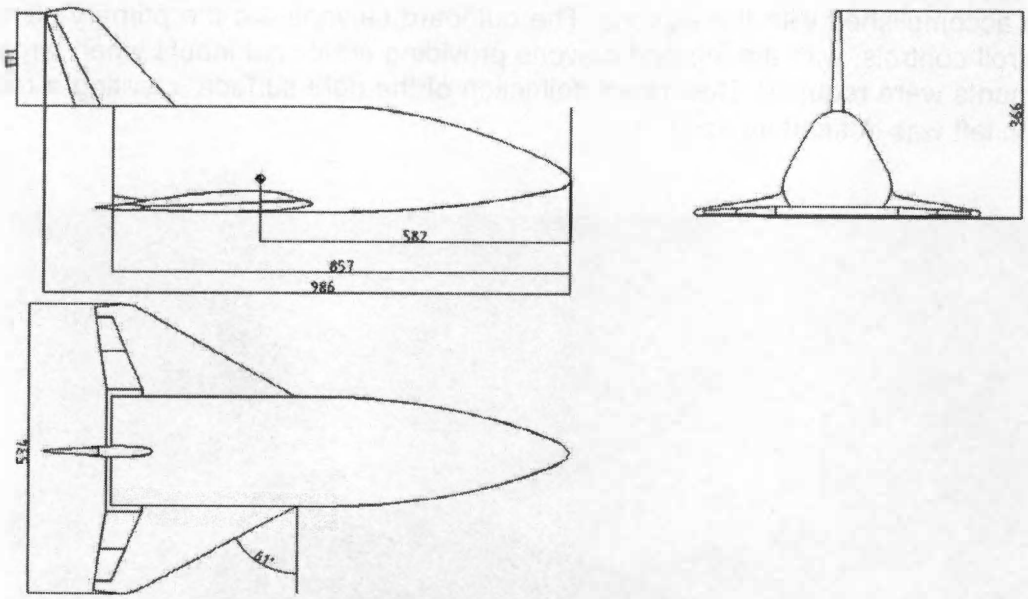

Figure 2. Dimensioned Line Drawing of the Phoenix, [mm]

3. Instrumentation Overview

The instrumentation of the Phoenix consisted of variety of sensors that allowed time histories of flight variables to be recorded. The system was designed and built by the staff of the Lehrstuhl für Flugdynamik, and the electronics workshop at the institute. The Phoenix contained a three-axis accelerometer to record x, y, and z linear accelerations relative to the body fixed axes. The accelerometer was supplied by Wuntronic GmbH, and had a range of ± 3g. Rotation rates were measured with GyroChip II solid-state rotation sensors from BEI Sensors & Systems Company, with a range of ±100 deg/sec. Pressure transducers provided angle of attack, angle of sideslip, dynamic pressure, and static pressure data. The transducers provided eight-bit output that produced an integer value between 0 and 65,650. The Phoenix was also equipped with a magnetometer to determine the orientation with respect to the Earth's magnetic field. Flight data were relayed to the dSPACE® hardware by the telemetry system. The instrumentation assembly is shown in Figure 3.

ControlDesk® and dSPACE® are trademarks of dSPACE, GMBH, Paderborn, Germany. dSPACE® hardware is an experimentation platform, consisting of a real-time processor and various input and output ports including analog to digital converters, and digital to analog converters. The equipment used in this work was the model RTI 1103. ControlDesk® software is the management and control interface for the hardware.

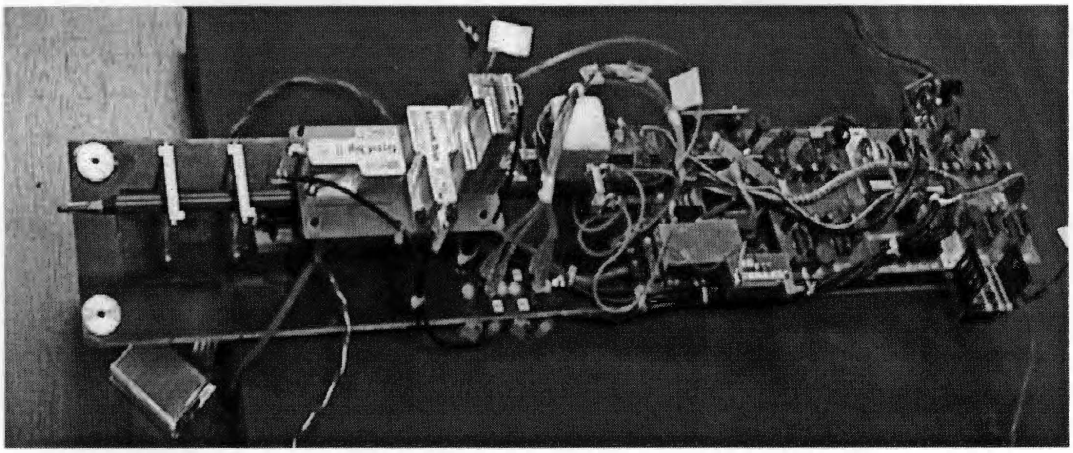

Figure 3. Instrumentation Assembly

The software allows for the design of virtual instruments, and is compatible with MatLab/Simulink®. The use of the "Real-Time Workshop" functions allow Simulink® models to be compiled and executed on the real-time processor. This function was utilized extensively in this work. Additionally, MatLab® m-files could easily trace input and output values with the "Interface and Trace Libraries" functions.

Matthias Kurze designed the autopilot-controller. It was submitted as his thesis work at the Institute for Flight Dynamics. It consisted of a Simulink® simulation that performed pitch attitude control, yaw control, roll control, gust alleviation, and allowed for excitation inputs as required for these flight tests.

Several modifications were made to the transmitter system during testing to assure adequate power for the tests, and to avoid interference from other devices. A high sensitivity receiver was installed in the Phoenix, and a large antenna was purchased specifically for the purpose of increasing the range of the equipment.

There is no documentation that currently accompanies the Phoenix regarding the component layout, proper procedures for charging the batteries and connecting an external power supply. This lack of documentation is due largely to the small number of people working on the project. Most of the connections and procedures are straight forward, although one cable was replaced during the testing phase to eliminate the possibility of damaging one of the batteries.

The instrumentation has thus far proven to be durable and reliable. As an assembly it can be removed from the model by disconnecting several modular connections and removing the mounting nuts. Throughout this work it was necessary to install and remove the assembly numerous times, and care was always taken to avoid damaging the various instruments. It was also found that the recovery parachute module came in contact with the instrumentation assembly while installing the parachute module. No equipment failures were experienced, but any researchers working with the Phoenix should be aware of the delicate nature of electronics in general.

4. Center of Gravity Location

The center of gravity of the model was adjusted after all the components were installed, and the final finish was applied. It was desired that the center of gravity lie in the plane of symmetry, and longitudinally lie in the center of the linear accelerometer on the instrumentation assembly. To position the center of gravity, a support system was created to allow the model to be supported in two places, where each support was on a mass balance. The mass reported on each balance, with the known distances between the supports, allowed for the calculation of the center of gravity in each axis direction. The location was then adjusted by the addition of lead to the model so that the proper location in the X and Y direction was obtained. It was not possible to locate the center of gravity in the Z direction at the desired location. The actual center of gravity could not be moved to this location without adding a very large mass. As a result the controller was modified so that acceleration in the x direction would not include the component due to rotations about the y axis. The pitch rate and the known offset of the center of gravity from the linear accelerometer allowed for the rotational motion effect to be subtracted from the measured acceleration.

5. Experimental Determination of the Moments of Inertia

The moments of inertia and the product of inertia for the Phoenix were determined by a method described by Turner [17], Miller [10], and Arning [3]. The final equations are shown in Figure 4. While the equations for I_x and I_y are identical, the model was swung about different axes to produce the different results. In general the method involved attaching a low-friction bearing to the bottom of the model and suspending it inverted so that it became a pendulum. The model was then swung and the period of the oscillation determined with a stopwatch. For the I_z moment of inertia it was necessary to add an additional mass to the model because the bearing was attached at the center of gravity in the x and y directions. The additional weight allowed the model to oscillate. The equation for I_z contains the term m_{add}, which is this additional mass. The product of inertia was determined by rotating the model through a known pitch angle Θ, and using the formula for $I_{x\Theta}$ to calculate the moment of inertia. The product of inertia followed from the I_{xz} formula. The I_{xy} and I_{yz} are zero due to symmetry. L and L^* are the perpendicular distances from the center of gravity to the axis of rotation, L^* being the perpendicular distance when the model is inclined at the angle Θ. The value for L was determined by measuring the distance from the axis of rotation to the bottom surface of the model. This distance was then added to the distance from the experimentally determined location of the center of gravity to the outer surface of the model as determined by building up the measurements of the various components and by the construction drawings for the model. Figures 5 through 8 show the model in each of the test configurations. The results are shown in Table 2. These values are average values from the test data. For each axis of rotation, the oscillations were counted and timed sixteen times. The stopwatch used read in hundredths of a second, but was started and stopped by hand. These values were considered accurate to within one tenth of a second. The data were however, extremely repeatable. Linear measurements were taken with a rigid ruler and considered accurate within one millimeter. Care was taken so as not to induce secondary coupled oscillations due the bending of the support rod or any flexibility of the structure. These were avoided by limiting the test to small oscillations.

Full size vehicles would normally require corrections for various effects including the moment of inertia of the mounting gear, friction in the bearing, the buoyancy of the structure, and the effect of the air influenced by the model oscillations. Miller [11] describes a method to account for the influenced air using the idea of equivalent flat plate area and empirical data. Miller [11] further describes that the overall system damping can be determined by observation of the decrease in amplitude between the first and second oscillations, noting, "when the decrease never exceeds one tenth of the original amplitude. ...the error in the moment of inertia will be less than 0.02 percent". Additionally, Arning [3], investigated the validity of neglecting the friction corrections with small model vehicles by

$$I_x = \frac{WT^2 L}{4\pi^2} - \frac{WL^2}{g}$$

$$I_y = \frac{WT^2 L}{4\pi^2} - \frac{WL^2}{g}$$

$$I_z = \frac{T^2}{4\pi^2} m_{add} gr - m_{add} r^2$$

$$I_{x\theta} = \frac{mgT^2 L^*}{4\pi^2} - mL^{*2}$$

$$I_{xz} = \frac{I_x \cos^2\theta + I_z \sin^2\theta - I_{x\theta}}{\sin 2\theta}$$

$$L^* = L\cos\theta$$

Figure 4. Equations for Moments and Product of Inertia Calculation

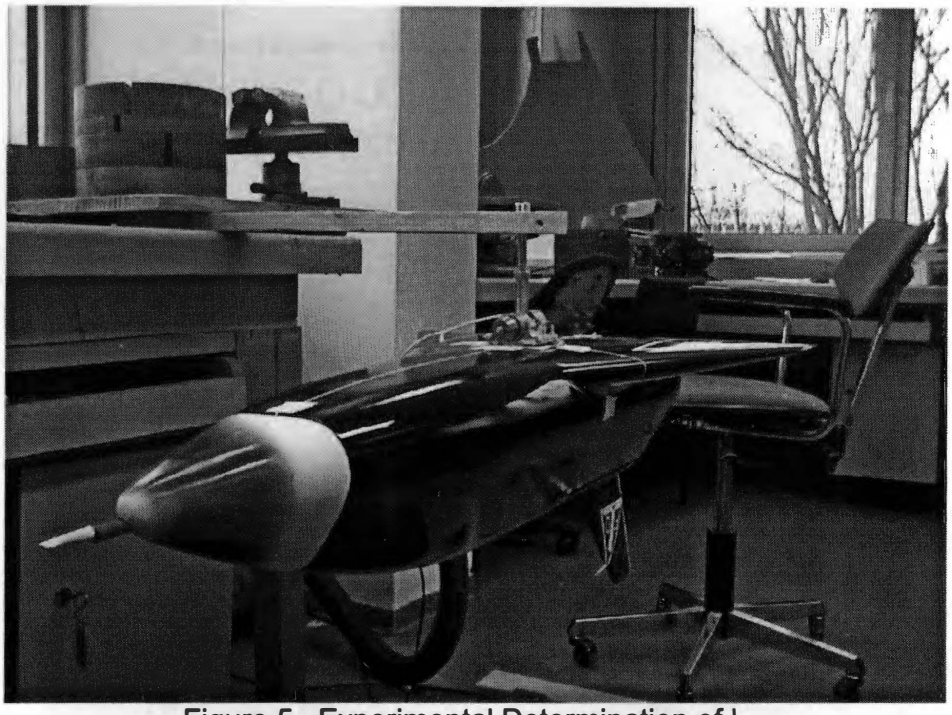

Figure 5. Experimental Determination of I_x .

Figure 6. Experimental determination of I_y .

Figure 7. Experimental Determination of I_z.

Figure 8. Experimental Determination of I_{xz}.

Table 2: Experimentally Determined Moments and Product of Inertia

I_x	0.0406 kg m^2
I_y	0.1874 kg m^2
I_z	0.1776 kg m^2
I_{xz}	-0.0309 kg m^2

comparing values of cubes calculated theoretically with values determined experimentally. They were found to be in reasonable agreement. Values were determined directly from the equations, and no corrections were made to the values for the Phoenix.

While the data proved to be repeatable, errors may still be present in the calculated values. A more thorough analysis would include investigation of the effects that were neglected here in order to verify the validity of the assumptions

6. Air System Calibration

The air data collection sensors for the Phoenix consisted of a five-hole probe and a four-hole static probe. The five-hole probe is shown in figure 9. The two probes were used to measure angle of attack, angle of sideslip, dynamic pressure, and static pressure. The calibration of the system was completed in the wind tunnel at RWTH, and data were collected over the operating range of the pressure transducers. Figure 10 shows the model and the model support system of the wind tunnel. The collected data were then used to construct "look-up" tables in a Matlab/Simulink® simulation, and the tables provide a means to convert transducer output to known values of pressure.

Data were collected using the dSPACE® hardware, ControlDesk® software, as well as MatLab/Simulink®. The MatLab® program is shown in Appendix B. The test procedure was to record the barometric pressure, and then operate the wind tunnel at an initial dynamic pressure. While dynamic pressure remained constant, the Phoenix was cycled through a range of angles of attack and angles of sideslip in one-degree increments. For the calibration, alpha varied from 0 to +25 degrees, and beta varied from -10 to +10 degrees. When the data were collected for these angles, the dynamic pressure was increased. The "look up" tables were constructed from data collected at the dynamic pressures shown in Table 3.

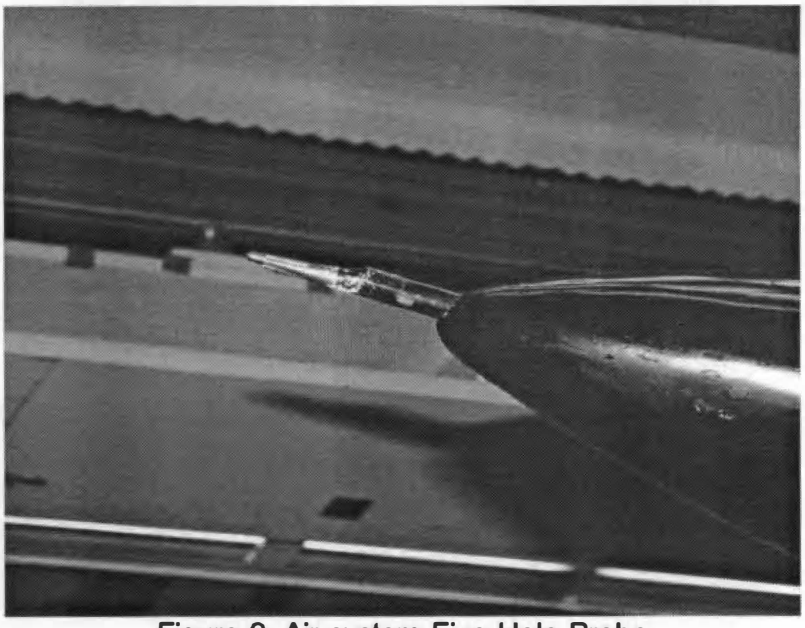

Figure 9. Air system Five-Hole Probe

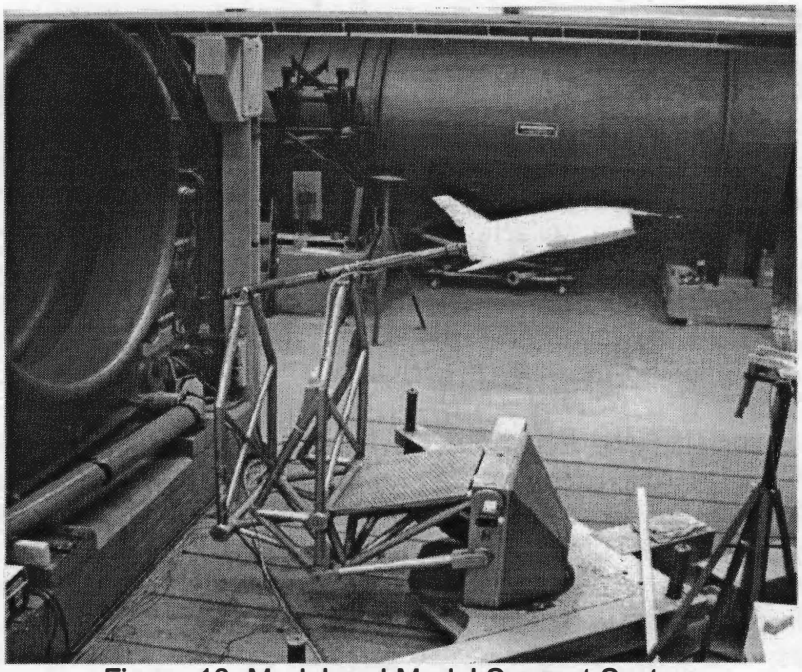

Figure 10. Model and Model Support System

Table 3: Wind Tunnel Test Conditions for Air System Calibration

Test Number	Mean Dynamic Pressure (mm H_2O)
1	14.50
2	26.15
3	40.25
4	54.77
5	71.37
6	76.70
7	83.85

The raw data were collected as matrices of static pressure, dynamic pressure, angle of attack, and angle of sideslip. The data proved to be very non-linear, and coupled. In order to use the data to determine alpha, beta, dynamic pressure, and static pressure it was necessary to create a Simulink® model to utilize an iterative process to converge on the actual parameters. The model first created an approximate look up table for dynamic pressure by calculating the mean of the alpha and beta data.

This estimated dynamic pressure value became the input to determine an estimated alpha and beta. The estimated alpha table was created by calculating the mean of the data for all values of beta. The result was an approximate lookup table for alpha and dynamic pressure that was not a function of beta. The same was done for beta, creating a lookup table for beta and dynamic pressure that was not a function of alpha. These estimated values were then used as input into the tables of the actual data to determine a better estimate for dynamic pressure, alpha, and beta. Three such iterations proved to be sufficiently accurate, meaning that three iterations provided values that matched the commanded input values, and successive iterations proved no additional gain of accuracy. The process was verified in the wind tunnel by using the wind tunnel controls and the model support system to provide a range of known conditions.

The five-hole probe with the pressure transducers provided repeatable data. The holes were very small, and susceptible to interference from debris. A plastic cover was used to protect the probe when not in use. Care had to be taken when installing or removing the nose cone, and normally the plastic cover was used to protect the probe. The nose cone was made of foam designed to absorb energy on impact, but had a tendency to flake away, and could potentially clog the probe. Several nose cones were constructed so as to have a replacement after each flight as needed, and a variety of nose cones were tested in the wind tunnel so as to investigate the influence of different nose cones on the air data. The probe was found to be far enough in front of the cone so that any variations in manufacturing did not appreciably affect the data.

The static pressure calibration was determined by recording the barometric pressure on the test day, and using a vacuum/pressurization system to create and record known static pressures and the corresponding pressure transducer values. The collected data is shown in Appendix A. The data were referred to the barometric conditions on this particular day. The wind tunnel data showed that the measured static pressure values were a function of alpha, beta, and dynamic pressure, as well as test day barometric pressure. A Simulink® model was created to "adjust" for the variances in measured static pressure over the range of dynamic pressures, alpha, and beta. These tables and models were combined to provide a complete calibration over the predicted operating range of the Phoenix.

Model control in the wind tunnel was provided by "Schwenk", a MatLab function that has been successfully used in numerous projects to provide precise model control input to the model supports system. The accuracy of the model control system is plus or minus one tenth of one degree. A simplified version of the entire air system model is shown in Figure 11. The model details the initial estimates and one iteration of the process required to determine alpha, beta, and dynamic pressure from the transducer data.

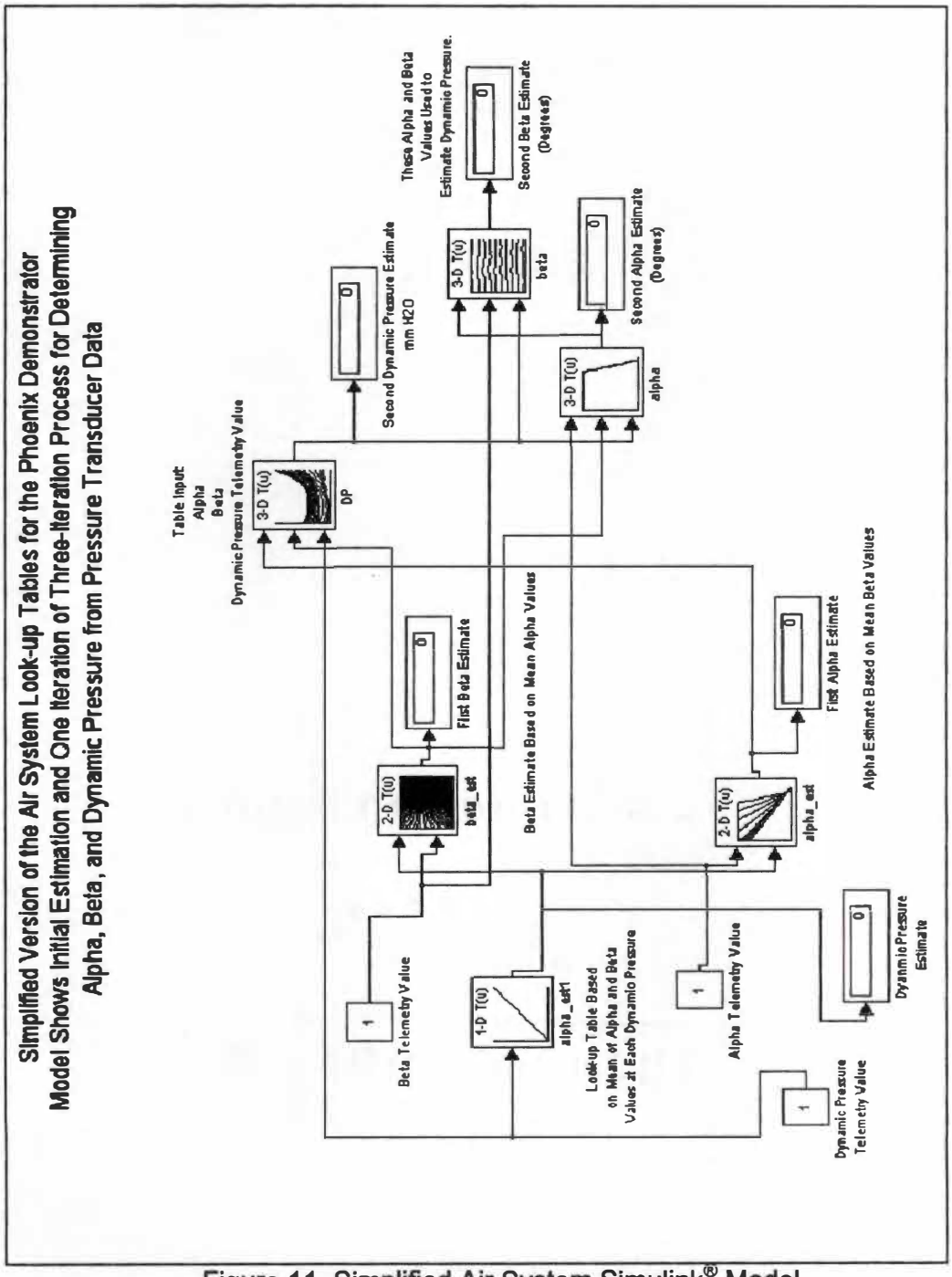

Figure 11. Simplified Air System Simulink® Model

7. Control Surface Deflection Calibration

The control surfaces of the Phoenix consist of: a rudder, a body flap, two outboard elevons, and two inboard elevons. All surfaces were driven by a separate servo, and the deflection was proportional to the servo input. Each surface also had a potentiometer to measure the deflection. The required calibrations were two relations. The first was between actuator input voltage and deflection, and the second was between actual deflection and the value returned by the telemetry system from the potentiometer.

The calibration process utilized the dSPACE® hardware, ControlDesk® software, and MatLab/Simulink®. The hardware and software provided the means to systematically vary the input, measure the deflection, and record the data. The range of motion of the control surfaces is shown in Table 4. A typical test configuration is shown in Figures 12 and 13, and the MatLab® program is shown in Appendix B. Data were determined over the operating range of each surface in approximately two-degree increments. The raw data were used to create "lookup tables" for MatLab® to use to interpolate over the operating range. The results were incorporated into the autopilot-controller. The autopilot was then able to provide stability and control for the model, and produce inputs to use for parameter determination.

Figure 14 is the Simulink® model used to collect the calibration data. The constants were connected to sliders in the ControlDesk® layout used to vary the input voltage supplied to the digital to analog converters. The "bad Link" block shows were the digital to analog connections are made on the particular computer that has the dSPACE® hardware installed.

Table 4: Control Surface Deflection Limits

Rudder	± 25 degrees
Body Flap	± 15 degrees
Inboard Elevons	± 20 degrees
Outboard Elevons	± 20 degrees

Figure 12. Determination of Control Surface Deflection Calibration.

Figure 13. Experimental Determination of Rudder Calibration

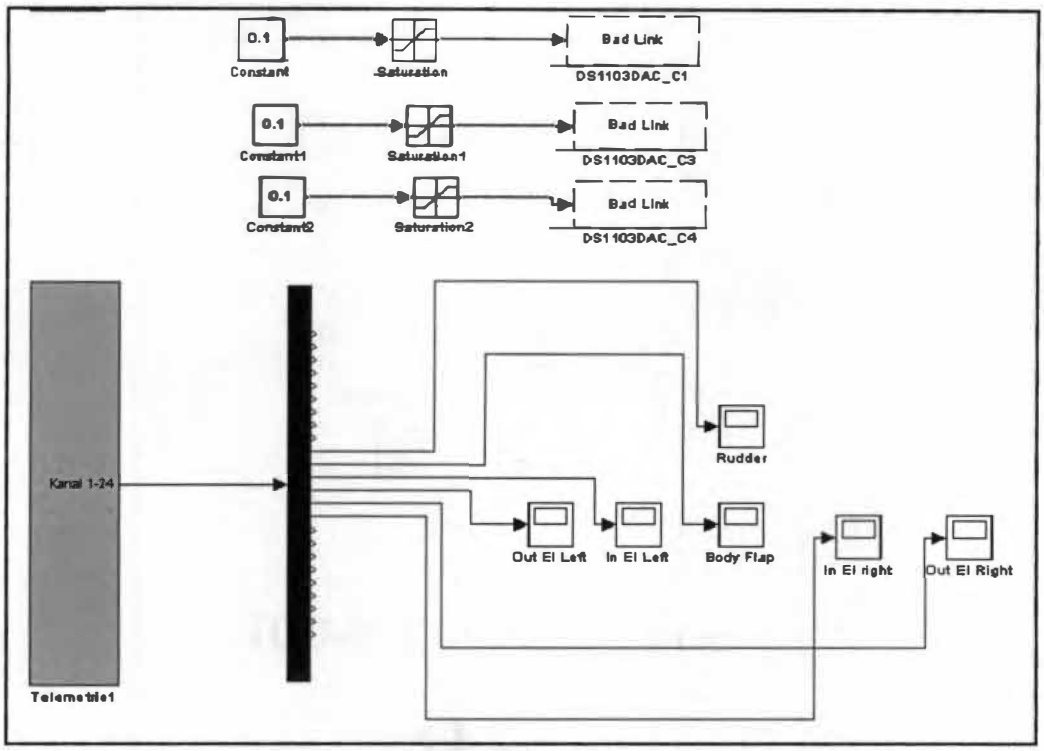

Figure 14. Simulink® Model for Control Surface Calibration

Figure 15 is the model used to verify the collected data. This model has inputs to all six control surfaces simultaneously. The additional block in the lower right corner is the block to control the recovery parachute. The calibration was required to determine the voltage required by the parachute release servo for the logical open and closed states. Figure 16 is a typical subsystem that is used in the model of figure 15. The subsystem shows the graphical representation of the look up tables. The constants in the figures could easily be connected so as to provide a way to "zero" all the control surfaces so as to be aligned with the trailing edge of the wing tips. The control surface calibrations were repeated several times for various reasons. Initially the calibrations were repeated to investigate the repeatability of the data, and to choose between using a curve fit equation or a look-up table approach in the Simulink® model. The look-up table approach seemed better because of non-linearities in the system. There was also a noticeable hysteresis in the system. The look-up tables provided mean values and allowed for the non-linearities. The control surfaces were also calibrated several times during the transmitter and receiver testing phase. Standard procedure called for the transmitter to be turned on before the receiver.

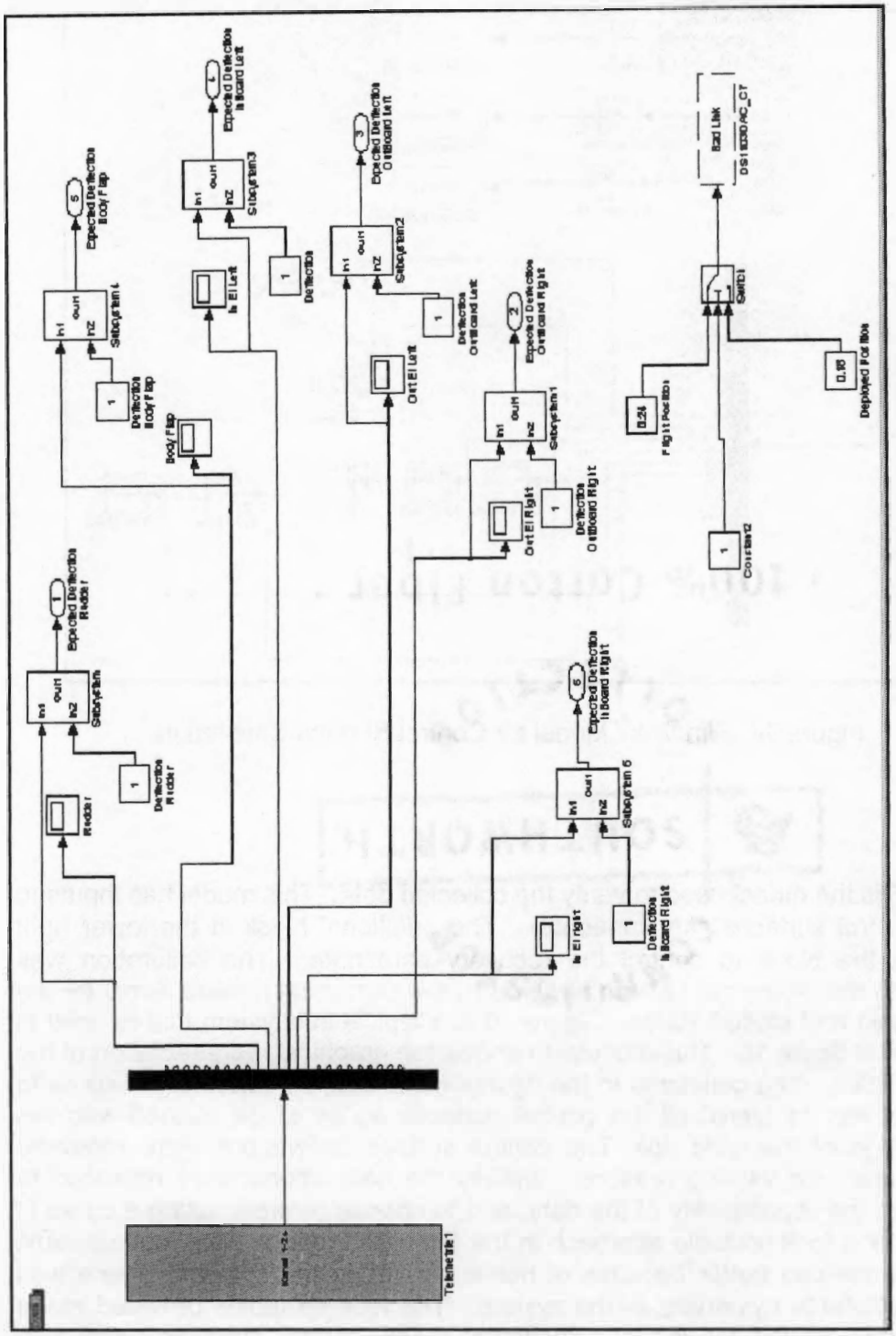

Figure15. Simulink® Model for Verification of Control Surface Data

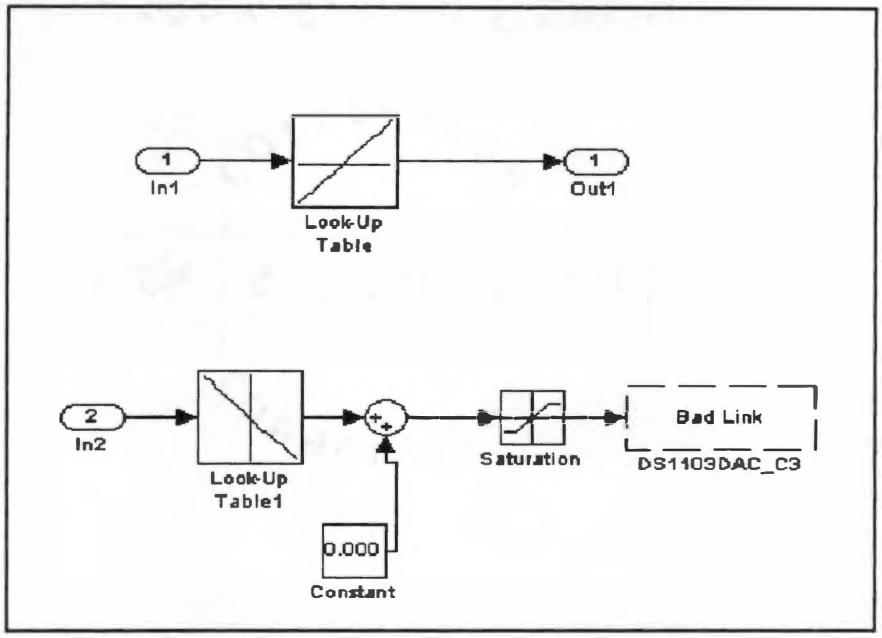

Figure 16. Simulink® Subsystem Utilizing Look-Up Tables Measured Data

It was found that when the Phoenix was out of contact with the transmitter, the surfaces had a tendency to erratically run against their stops, as is typical of many radio controlled devices. The calibrations were found to be changed by this process, so it was desirable to recalibrate all surfaces periodically during the range test phase so as to keep the model flight-test ready.

8. Description of Flight Tests

The flight tests were designed to collect longitudinal and lateral data on each flight. The model will be first carried to release altitude and position by a separate radio controlled carrier airplane, with the model connected to the underside of the carrier. After release, the autopilot trims the model to the predetermined angle of attack. The autopilot then initiates the longitudinal control inputs to excite longitudinal motion. When the model reached an altitude of 400 meters the controller switches to the lateral control inputs. At an altitude of 100 meters the control surfaces will be set to zero deflection, and the recovery parachute deployed. Throughout the entire flight the model will be programmed to fly in a steady spiral so that the landing spot would be with a two hundred meter radius.

Control input was designed as a "1123" type as shown in Figure 17. Outboard elevons were deflected together to produce the longitudinal motion. The cycle time of the longitudinal inputs was chosen as 0.28 seconds. This value corresponds to the scaled short period motion value of the full-size Phoenix under development by the European Space Agency. The lateral motion will be excited by alternating rudder and outboard elevon deflections with the same type of "1123" signal. In this motion the outboard elevons will move in opposite directions to produce the rolling motion. The cycle time for the lateral inputs is 0.18 seconds, which corresponds to the scaled dutch-roll frequency of the full-size Phoenix. In both the longitudinal and lateral motions the planned amplitude of the deflections equals five degrees. The planned data-sampling rate for all tests equals 200Hz.

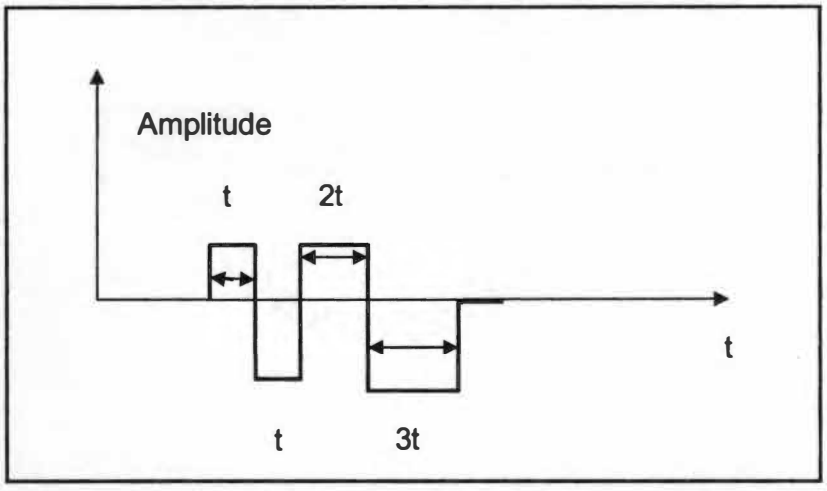

Figure 17. Control Surface "1123" Input Signal

The flight tests are planned for the model airplane flying area just outside Eschweiler, Germany. The area is an open area with a grass runway surrounded by farmland. Outside the immediate area are several wind turbines for electricity generation. They are not considered a hazard for this project, but do however indicate that strong winds are common in this area. In general, a steady, or preferably a calm atmosphere is the most desirable for this type of flight testing. Atmospheric turbulence will introduce errors into the data. This location may limit the days available for flight testing.

9. Conclusions

The Phoenix project at RWTH is the result of the efforts of many people. The design and construction were nearly complete as this work began. Mr. Kirschstein has created his doctoral dissertation research around the flight test program, and other students have contributed as well. This work took the project from the construction phase to the flight test phase. All necessary tasks have been completed, and the Phoenix is ready for flight-testing. The measurements and calibrations are complete, telemetry and transmitter equipment has been tested, and the flight test plans are complete.

Several potential problems have been observed. The tendency of the control surfaces to drive against their stops can create errors in the calibrations and the small holes of the five-hole probe could become clogged during flight testing. The weather at the location chosen for flight testing may also prove to be a problem. Additionally the instrumentation has not yet been proven to be reliable in an actual flight test.

Operation of the Phoenix is in general, straight-forward. Although at times some documentation would be helpful, especially for persons new to the project. Tasks required for flight include pre-charging batteries, gathering a wide range of equipment, and packing the recovery parachute. Any missing item or forgotten task would cancel or delay a flight.

It is expected that the collected data can be used in a number of ways. Several tasks are already planned. It is expected that stability derivatives for the Phoenix can be estimated from the data by using a multiple regression analysis. The data can also give insight into the effectiveness of the augmentation system. The project leaders expect to use a transfer function model to determine the short period and Dutch roll frequencies and damping ratios for the augmented vehicle. The data can also be compared with the data collected in the wind tunnel. The input frequency dependency of the stability derivatives has already been investigated in the wind tunnel [9]. A series of flight tests may be planned around a matrix of various control input frequencies. This frequency dependence is an indication of the non-linearities in the aerodynamics of the Phoenix [9].

10. Recommendations

The Phoenix project is positioned to complete the flight test plan and provide excellent information. Several recommendations however, may help the program maneuver around some of the potential problems observed.

It is recommended that other locations for flight tests be investigated in order to satisfy the requirements for a steady, preferably calm atmosphere. The weather near Aachen has many days per year that are not suitable for flight-testing. The airport in Mönchengladbach may be a possible alternative. This site should be investigated to determine if there is enough open area for testing, and if the traffic load would permit this type of testing. However, even though model testing has been allowed at the airport in the past, German aviation authorities would likely be reluctant to allow any potentially dangerous flight tests to be conducted at the airport.

It may also be necessary to redesign the control surfaces so that they are more robust, while not significantly affecting the weight. Accurate calibrations are required for the data to be useable, and an improved design would prevent errors in the data.

The electronics are susceptible to vibration from the carrier vehicle or damage from a crash. It is recommended to investigate a vibration isolator to protect the instruments and soften a shock from a crash landing. Further, it may be possible to develop a process to treat the inside of the nose cone to further prevent the possibility of a clogged air system line. No problems were experienced in ground testing, but flight may prove that a redesign is needed.

A final recommendation is that additional documentation be developed regarding the operating procedures. A checklist of required equipment would also be helpful. Both documents would make it easier for new researchers to utilize and benefit from the Phoenix model.

References

[1] Advisory Group for Aerospace Research & Development, *Methods for Aircraft State and Parameter Identification*, North Atlantic Treaty Organization, AGARD Conference, Proceedings Number 172, Neuilly Sur Seine, France, May 1975.

[2] Advisory Group for Aerospace Research & Development, *Parameter Identification*, North Atlantic Treaty Organization, AGARD Conference Proceedings Number 104, Neuilly Sur Seine, France, November 1979.

[3] Arning, Richard, *Untersuchung Flugmechanischer Eigenschaften eines Raumflugzeugs mit Hilfe frei Fliegender Modelle*, Shaker Verlag GmbH, Aachen 2002.

[4] Astrium, *Reusable Space Transport Systems to Reduce Costs*, Press Release, http://www.spaceref.com/news/viewpr.html, June 19, 2001.

[5] Boucher, Robert W., Drexel A. Rich, Harold L. Crane, Cloyce E. Matheny, *A Method for Measuring the Product of inertia and the Inclination of the Principle longitudinal Axis of Inertia of an Airplane,* Technical Note 3084, National Advisory Committee for Aeronautics, Washington D.C., April 1954.

[6] Etkin, Bernard, Lloyd Duff Reid, *Dynamics of Flight: Stability and Control*, John Wiley & Sons, Inc., New York, NY, 1996.

[7] Iliff, Kenneth W., *Aircraft Identification Experience*, NASA Dryden Flight Research Center, Edwards, CA, 1979.

[8] Iliff, Kenneth W., Lawrence W. Taylor, Jr., *Determination of Stability Derivatives from Flight data Using a Newton-Raphson Minimization Technique,* NASA Technical Note TN-6579, National Aeronautics and Space Administration, Washington, D.C., March 1972.

[9] Kirschstein, S., W. Alles, *Identification of Dynamic Derivatives with a Controlled Wind Tunnel Model of the Spaceplane-Configuration Phoenix*, Lehrstuhl für Flugdynamik, Rheinisch-Westfälische Technische Hochschule, 2004.

[10] Miller, M.P., *An Accurate Method of Measuring the Moments of Inertia of Airplanes*, Technical Note Number 351, National Advisory Committee for Aeronautics, Washington D.C., October 1930.

[11] Miller, Marvel P., Hartley A. Soule, *The Experimental Determination of the Moments of Inertia of Airplanes*, Report Number 467, National Advisory Committee for Aeronautics, Washington D.C., December 1933.

[12] Plaetschke, E., *Practical Input Signal Design,* DFVLR- Institut for Flugmechanik, D-330 Braunschweig-Flughafen, Germany.

[13] Ross, A. Jean, *Identification Experience in Extreme Flight Regimes*, Flight Systems Department, Royal Aircraft Establishment, Farnborough, Hampshire, England.

[14] Spies, Johann, Herbert Grallert, *Configurations Finding and Characterization of ASTRA Reference Concepts,* ASTRIUM – Space Infrastructure, Bremen, Germany, 2001.

[15] Spies, Johann, H. Kuczera, *The Sub-Orbital Hopper – one of FESTIP'S Preferred Concepts*, American Institute of Aeronautics and Astronautics, AIAA-99-4945, 1999.

[16] Stepner, David E., Raman K. Mebra, *Maximum Likelihood Identification and Optimal Input Design for Identifying Aircraft Stability and Control Derivatives,* NASA Technical Note TN-6579, National Aeronautics and Space Administration, Washington, D.C., March 1972.

[17] Turner, Howard L., *Measurement of the Moments of Inertia of an Airplane by a Simplified Method,* Technical Note 2201, National Advisory Committee for Aeronautics, Washington D.C., October 1950.

Appendices

Appendix A. Experimental Data

Table 5: Static Pressure Calibration Raw Data

Gauge Pressure (mm H_2O)	Transducer Output
-1000	2896
-900	6720
-800	10544
-700	14352
-600	18160
-500	22080
-400	25920
-300	29680
-200	33568
-100	37440
0	41264
100	44848
200	48608
300	52400
400	56144
500	60000
600	63760

Appendix B. MatLab Programs

```
% m file to calibrate the air system on the Phoenix model in the wind tunnel
% to create look up tables for all air data conditions in range
%*****************************************************************************************************
% Author = Mike Rigsby, RWTH und UTSI
% *****************************************************************************************************
% this program calls simulink function 'schwenk' to move the model support
% system, telemetrie records data with the D space hardware
% alpha range 0 to 25 degrees, 1 degree increments
% beta range  -10 to 10 degrees 1 degree increments
% airspeed range 5 to 50 m/s ,  2 m/s increments
% at a particular airspeed the calibration tests are to be made throughout the range of alpha and
% beta, and repeated throughout the airspeed range

% variables:
%       alpha           - angle of attack of the model support system
%       ang_of_att      - mean, measured angle of attack matrix
%       ang_of_slp      - mean, measured angle of sideslip matrix
%       beta            - angle of side slip of the model support system
%       data            - row vector of collected data, after calc of mean
%       dyn_pres        - mean measured dynamic pressure matrix
%       i               - counting variable, alpha loop
%       j               - counting variable, beta loop
%       master_var      - gives path to telemetrie system
%       out_data        - matrix of raw data collected
%       stat_pres       - mean measured static pressure matrix,
%
% Select hardware to be used with this experiment
mlib ('selectboard', 'DS1103');

% Define counting indices
i=1
j=1

% Define variables to trace with the GetTrcVar function
master_var={'Model Root/static_pres/In1';...
      'Model Root/total_pres/In1';...
      'Model Root/angle of attack/In1';...
      'Model Root/angle of sideslip/In1'}
[static_pres, dynamic_pres,angleof_attack,angleof_sideslip]=mlib('GetTrcVar', master_var);

% For Loop (beta)
for beta=-10:1:10;
i=1;
      % For loop (alpha)
      for alpha=0:1:25;

      % call 'schwenk' function to set alpha and beta position, returns
      % when transition to new alpha and beta is complete
      schwenk(alpha,beta)

      %alpha
      %beta
      % set data acquisition options
      mlib('Set','Tracevars',[static_pres dynamic_pres angleof_attack angleof_sideslip]',...
```

```
    'NumSamples', 1000);

    % capture data
    mlib('StartCapture');

    % Wait until data acquisition is complete
    while mlib('CaptureState')~=0,end

    % Fetch data
    out_data=mlib('FetchData');

    % determine the mean value, returns mean of each column, stored as a row vector
    data=mean(out_data');

    %store mean values as elements of a matrix
    stat_pres(i,j)=data(1,1);
    dyn_pres(i,j)=data(1,2);
    ang_of_att(i,j)=data(1,3);
    ang_of_slp(i,j)=data(1,4);

    % increment i
    i=i+1

    % Next loop (alpha)
    end

% increment j
j=j+1

% Next loop (beta)
end

%Save the measured values
 [filename, pathname] = uiputfile('.mat', 'Save measured values...');
      save([pathname, filename], 'stat_pres', 'dyn_pres', 'ang_of_att', 'ang_of_slp');
```

```
% M File to create a static pressure correction table based on data
% collected in the wind tunnel.
% ***************************************************
% Author - Mike Rigsby - UTSI & RWTH
% ***************************************************
%
% Wind tunnel test October 16, 2003
% - barometer = 757.2mm Hg = 100951.7 Pa

% Static calibration test October 30,2003
% - barometer = 728.6 mm Hg= 97138.7 Pa
%
% variables:
% corr_tab     - 26x21x4 table of corrects to static pressure reading (Pa)
% mmH2O_Pa_conv - constant conversion factor
% mmHg_Pa_conv - constant conversion factor
% sp15         - static pressure data for dynamic pressure = 14.5 mm H2O
% sp40         - static pressure data for dynamic pressure = 40.25 mm H2O
% sp70         - static pressure data for dynamic pressure = 71.37 mm H2O
% sp85         - static pressure data for dynamic pressure = 83.85 mm H2O
% stat_mmH2O   - vector of test pressures 0= ambient on test day
% stat_pa      - vector of static pressures in Pa for test data points
% V_static     - vector of test data collected

% load static pressure data
load ac15.mat
sp15=stat_pres;
for i=1:1:26
  for j=1:1:21   %test day (Pa)      to mm H2O          to Pa    cal barometer
    corr_tab(i,j,1)=(100951.7)-(((sp15(i,j).*0.02628-1079).*9.80665)+97138.7);
  end
end

load ac40.mat
sp40=stat_pres;
for i=1:1:26
  for j=1:1:21
    corr_tab(i,j,2)=(100951.7)-(((sp40(i,j).*0.02628-1079).*9.80665)+97138.7);
  end
end

load ac70.mat
sp70=stat_pres;
for i=1:1:26
  for j=1:1:21
    corr_tab(i,j,3)=(100951.7)-(((sp70(i,j).*0.02628-1079).*9.80665)+97138.7);
  end
end

load ac85.mat
sp85=stat_pres;
for i=1:1:26
  for j=1:1:21
```

```
    corr_tab(i,j,4)=(100951.7)-(((sp85(i,j).*0.02628-1079).*9.80665)+97138.7);
  end
end

% vector of test data collected
V_static=[2896 6720 10544 14352 18160 22080 25920 29680 33568 37440 41264 44848 48608
52400 56144 60000 63760];

% routine to create a vector of static pressures (in Pa) from static
% calibration data October 30, 2003
stat_mmH2O=-1000:100:600;
barometer_mmHg=728.6;
mmHg_Pa_conv=133.32239;
mmH2O_Pa_conv=9.80665;
i=1
for j=-1000:100:600
  stat_pa(i,1)=barometer_mmHg*mmHg_Pa_conv+(mmH2O_Pa_conv*stat_mmH2O(i));
  i=i+1
end
```

```
% M file to develop correlations for control surface deflections
% for the Phoenix model.
%*****************************************************************************
% Author : Mike Rigsby - RWTH & UTSI
%*****************************************************************************
% Two correlations are required:
%
% 1) telecommand output  (+1 to  +4v) : actual control surface position (deg)
% 2) potentiometer output (0v to +5v): actual control surface position (deg)

% Variables:
% com                 -  vector of 1st order curve fit  coeff. [slope,intercept]
% command_out         -  output signal of telecommand system to actuator
% cont_sur_tab        -  table of input and measured values for cs deflections
% data                -  row vector of collected data, after calc of mean
% measured_value      -  physical value measured, and entered from keyboard
% out_data            -  matrix of raw data collected
% pot                 -  vector of 1st order curve fit coef. [slope,intercept]
% pot_out             -  output signal from potentiometer for cs position


% Hardware selection
mlib ('Selectboard', 'DS1103');

% Determine Variables to trace
master_var={'Model Root/Constant/Value';...
      'Model Root/In El right/In1'};
[command_out,telem_val]=mlib('GetTrcVar', master_var);

% Loop of  deflections (input signals) to telecommand system for each cs
for i=1:1:15

      % adjust slider on control panel and allow to stabilize before entering
      % value
      % Input physical measurement of control surface deflection from keyboard
      measured_value=input('Please enter measured angle of cs deflection....   ')

      % set data acquisition options
      mlib('Set','Tracevars',[command_out telem_val]',...
      'NumSamples', 1000,...
      'TimeStamping', 'OFF');

      % capture data
      mlib('StartCapture');

      % Wait until data acquisition is complete
      while mlib('CaptureState')~=0,end

      % Fetch data
      out_data=mlib('FetchData');

      % determine the mean value, returns mean of each column, stored as a row vector
      data1=mean(out_data(1,:));
      data2=mean(out_data(2,:));
```

```
    % store  data in a matrix
    cont_sur_tab(i,1)=data1;
    cont_sur_tab(i,2)=data2
    cont_sur_tab(i,3)=measured_value;


% loop for next control surface position (input to telecommand)
end

% plot data
plot(cont_sur_tab(:,1),cont_sur_tab(:,3),'b',cont_sur_tab(:,2),cont_sur_tab(:,3),'r');

% determine coefficients of 1st order equation for:
% input (1v to 4v)      command_out vs. measured_value
com=polyfit(cont_sur_tab(:,1),cont_sur_tab(:,3),1)

% determine coefficients of 1st order eqn. for:
% telemetrie value      pot_out  vs. measured_value
pot=polyfit(cont_sur_tab(:,2),cont_sur_tab(:,3),1)

% Save the matrix values
 [filename, pathname] = uiputfile('.mat', 'Save all values...');
      save([pathname, filename], 'cont_sur_tab','com','pot');
```

Vita

James Michael Rigsby was born in Louisville, Kentucky on November 7, 1966. He was raised in Louisville, and went to grade school at Schryock Elementary School. His family moved to Nashville, Tennessee in 1980, and he graduated from Madison High School in 1984. From there, he went to the University of Tennessee, Knoxville and received a B.S. in aerospace engineering in 1990.

Mike is currently pursuing a master's degree in aviation systems at the University of Tennessee Space Institute, Tullahoma, Tennessee.

1331 4702 39
10/20/04 MRB