University of Tennessee, Knoxville

TRACE: Tennessee Research and Creative Exchange

Doctoral Dissertations

Graduate School

5-2006

Assessment of the Trait Hope Scale with Social Service Providers

Andrea Kelli McCarter
University of Tennessee, Knoxville

Follow this and additional works at: https://trace.tennessee.edu/utk_graddiss

Part of the Social Work Commons

Recommended Citation

McCarter, Andrea Kelli, "Assessment of the Trait Hope Scale with Social Service Providers. " PhD diss., University of Tennessee, 2006.
https://trace.tennessee.edu/utk_graddiss/4266

This Dissertation is brought to you for free and open access by the Graduate School at TRACE: Tennessee Research and Creative Exchange. It has been accepted for inclusion in Doctoral Dissertations by an authorized administrator of TRACE: Tennessee Research and Creative Exchange. For more information, please contact trace@utk.edu.

To the Graduate Council:

I am submitting herewith a dissertation written by Andrea Kelli McCarter entitled "Assessment of the Trait Hope Scale with Social Service Providers." I have examined the final electronic copy of this dissertation for form and content and recommend that it be accepted in partial fulfillment of the requirements for the degree of Doctor of Philosophy, with a major in Social Work.

Karen M. Sowers, Major Professor

We have read this dissertation and recommend its acceptance:

William Nugent, Cynthia J. Rocha, Tricia McClam

Accepted for the Council:

Carolyn R. Hodges

Vice Provost and Dean of the Graduate School

(Original signatures are on file with official student records.)

To the Graduate Council:

I am submitting herewith a dissertation written by Andrea Kelli McCarter entitled "Assessment of the Trait Hope Scale with Social Service Providers." I have examined the final paper copy of this dissertation for form and content and recommend that it be accepted in partial fulfillment of the requirements for the degree of Doctor of Philosophy, with a major in Social Work.

Karen M. Sowers, Major Professor

We have read this dissertation and recommend its acceptance.

William Nugent

Cynthia J. Rocha

Tricia McClam

Acceptance for the Council:

Vice Chancellor and Dean of Graduate Studies

Thesis
2006b
.M23

Assessment of the Trait Hope Scale with Social Service Providers

A dissertation
Presented for the
Doctor of Philosophy degree
The University of Tennessee, Knoxville

Andrea Kelli McCarter
May, 2006

COPYRIGHT © 2006 by
ANDREA KELLI MCCARTER
All Rights Reserved

DEDICATION

I dedicate this dissertation to my parents and extraordinary extended family of friends.

My parents have been superbly supportive of me throughout my 14 year career as a professional student financially, emotionally and mentally. To my mother and father who has taught me to do my best at "whatever [my] hands find to do.

To all the friends who have touched my life in so many ways- this dissertation would not be completed without your listening to my ventures through the Ph.D. process and multiple edits and getting me out of the house to de-stress.

Acknowledgements

There have been so many people involved in the progress of my pursuit of higher education. I wish to thank Vickie Stout for introducing me to the idea of hope and encouragement to seek hope and find ways to inject it into others. I would like to thank Bill Nugent for serving on my committee and guiding me to a better understanding of statistics. I would like to thank Tricia McClam for coming onto my committee at the last minute and providing support through my edits and defense.

I would especially like to thank Karen Sowers for her support and challenges to me to better my research and writing in serving as my major professor. She has taught me a great amount about writing, teaching and researching in allowing me to work with her.

I would like to thank Sarah Hurley at Youth Villages for helping me through the data collection part of my research. She provided many hours of assistance in coordinating the collection of data and reading and providing feedback on my literature. Additionally, I would like to thank the crisis team with whom I have had the pleasure of working, especially Holly Morrell and Lynn Kinney, for allowing me flexibility and help balancing work and education.

I would like to thank Torrie Dorschug, Amy McGinley and Milly Morrow for the love and support they provided in so many ways through encouragement suggestions.

Lastly, I would like to thank Cynthia Rocha for being an extraordinary mentor, teacher and friend. She has provided me with the opportunity to learn along side of her for 6 years how to be a better teacher, researcher and writer. She has truly had an impact on my understanding of the world and myself.

Abstract

The purpose of this study was to examine the reliability of the Trait Hope Scale when used with a sample of socials service providers. Scale scores were collected from 104 social service providers in the southeastern region of the United States. Data was collected using self report surveys from a population of case managers in the social service field. Univariate analyses were conducted to determine the make up of the sample which was primarily white females having a graduate degree. Additionally, Bivariate analyses were used to compare the mean scores of the agency, pathway and hope scale between genders and races with no significant differences found.

Analyses were conducted to determine if the subscales (agency and pathway) of the Trait Hope Scale are measured in this population as they have been with other populations. When the constructs were analyzed separately there were no significant findings and it was determined that the model was not a good fit. However, when analyses were conducted with the constructs being correlated, the model presented as being a good fit. Finally, the model was analyzed with only the females being included. Similar results were found providing some evidence that the scale measures agency and pathway the same for men and women. The indicators were found to load on the appropriate construct in each of the models and the constructs were shown to only fit significantly when correlated rather than independently.

There is much to be learned about hope in the social service field. This study has been a preliminary step in determining if the Trait Hope Scale measures hope in social service providers the same way that it has been in other studies. There is a need to evaluate the possible model fit differences between genders and race. There is also a need to consider the impact of demographic characteristics such as income, age, experience, education and geographic location on a person's level of hope. Further research is needed to better define hope in social work and consider the possible impacts of a person's hope on her/his potential level of burnout and turnover.

TABLE OF CONTENTS

I. INTRODUCTION.....1

Statement of the Problem.....1

Purpose of the Study.....5

Objectives.....5

II. LITERATURE REVIEW.....6

History and Development.....11

Hope Theory Definition Development.....12

Historical Perspectives.....12

Attributes.....13

Theoretical Framework.....13

Rules of Hope.....16

Measurement Tools.....17

Snyder Hope Scales.....19

Research Outcomes.....22

Gaps in Research.....26

Research Questions.....27

III.METHODOLOGY.....28

Design.....28

Data Source.....29

Variables.....29

Instrumentation.....30

Data Collection.....30

Human Subjects.....30

Anonymity.....31

Procedures.....31

Data Analysis.....33
Univariate Analysis.....33
Assessing the Model.....33

IV. RESULTS/FINDINGS.....35
Univariate Analysis.....35
Categorical Variables.....35
Interval Variables.....36
Scale Frequencies.....37
Bivariate Analysis.....38
Structural Equation Modeling.....39
Uncorrelated Model.....41
Proposed Model.....42
Alternative Model.....44
Correlated Model without Men.....46

V. DISCUSSION.....48
Overview of Significant Findings.....48
Limitations of Study.....48
Implications for Research.....49
Implications for Theory.....50
Implications for Education/Practice.....51

LIST OF REFERENCES.....53
APPENDICES.....63
VITA.....80

LIST OF TABLES

Table		PAGE
1.	Pathology vs Strengths	7
2.	Hope Measurement Tools	18
3.	Trait Scale Research	24
4.	Demographic Characteristics	35
5.	Comparison of Means Between Gender	37
6.	Comparison of Means Between Races	37
7.	Trait Hope Scale Items	38
8.	Uncorrelated Model Parameters	41
9.	Proposed Model Parameters	43
10.	Alternative Model Parameters	45
11.	Correlated Model without Men Parameters	47

LIST OF FIGURES

FIGURES PAGE

1. GAP Interaction.....14

2. Tested Measurement Model.....34

3. Uncorrelated Model.....41

4. Proposed Model.....43

5. Alternative Model.....45

6. Correlated Model without Men.....46

CHAPTER I

Introduction

Statement of the Problem

The prevalence and incidence of burnout in social work is unknown, but considered to be an "above average risk of burnout" (Jayaratne & Chess, 1984; Pines & Kafry, 1978; Soderfeldt, Soderfeldt, & Warg, 1995, pg. 638). The financial, personal and social costs of burnout, although incalculable are assumed to be of immense proportions and can be devastating to both the individual and the organization (Sowers-Hoag & Thyer, 1987). Burnout effects can cause depression and physical health problems in social workers. These problems then potentially lead to social worker turnover or wastage. Knapp, Harissis and Missiakoulos (1981) discuss two terms in regards to turnover: turnover being defined as the loss of an individual in a specific social work job to another social work job and wastage being defined as the loss of an individual from the profession. The costs of turnover are high in separation (exit of an employee), replacement (interviewing and hiring) and training (time and money) for an organization as well as potential reinforcement of mistrust among the clients and decreased morale of the remaining employees (Blankertz, 1997; Braddock & Mitchell, 1992; Mor Barak, Nissly & Levin, 2001; Todd & Deery-Schmitt, 1996).

Between 30% and 60% of social workers leave their jobs or change careers each year (Ben-Dror, 1994; Geurts, Shaufeli & De Jonge, 1998; Jayaratne & Chess, 1984). Turnover in social work has "grave implications for quality, consistency and stability of services" (Mor Barak, Nissly, & Levin, 2001). Clients have reported that turnover or change of service providers causes personal disruption or prolonged crisis (Drake &

Yadarma, 1996; Knapp, Harissis & Missiakoulos, 1981). Additionally, turnover portrays a negative reputation of the profession. Burnout and turnover rates are extremely high in the social service fields partly because of feelings of hopelessness (Walsh, 1987).

Hopelessness can be caused by a person's personal characteristics, her/his environment, multiple losses and illness (Farran, Herth & Popovitch, 1995) and has been shown to have detrimental effects on people ranging from increased physical health problems to depression and psychological problems (Grossarth-Maticek, Kanazir, Vetter, Schmidt, 1983; Itzhaky & Lipschitz-Elhawi, 2004). Increased incident of cancer, depression and suicidal thoughts are just a few of the problems people with a low level of hope may deal with. These impacts can lead to decreased functioning further lowering a person's level of hope. Many of the clients that social service providers work with are experiencing the physical and psychological effect of hopelessness. Social service providers who work with people who feel hopeless have the potential to taking on those traits of hopelessness. Likewise, a social service provider who is already experiencing a lack of hope can transfer that hopelessness to her/his clients.

Social workers need to feel hopeful on the job to provide good services to their clients. There are a number of reasons that this lack of hope is detrimental to social work, however the primary reason is that when social workers leave their jobs there is a disruption in the continuity of services to clients (Drake & Yadama, 1996). "Hope is a vital ingredient for enhancing quality of life and promoting health and healing" (Beck, Rawlins & Williams,1984; Farran, Herth, & Popovich, 1995, p.80; Farran & Popovich, 1990; Miller & Powers, 1988; Owen, 1989). The Code of Ethics presents guidelines indicating that the well-being of clients is the first and foremost important issue to social

workers and the profession (NASW, 1999, 1.01). If we want the best for our clients, then the well-being and best interest of the workers needs to be considered.

One way of accomplishing this is to consider the level of hope that social workers have related to their current position and organization. If social service providers are to be effective in the field, there must be a focus on goal setting, discussing the ways in which those goals will be met and providing a level of motivation for reaching those goals. Given the primary responsibility of social workers to better the well-being of clients then social workers need to be aware of their own hope. "We can't give what we have not got" (Elliot, 2005, p.). Hope has promise in the social service field in identifying hopelessness in order to alleviate burnout and turnover. However, there needs to be an appropriate measurement tool that is valid and reliable in social services.

Hope is the relationship between motivation and methods used in order to reach goals successfully. Hope provides the 'stuff' that facilitates change in people. It provides the substance for making change and reaching goals. It is important for social service providers in that an ability to determine hope allows one to better assess a person's strengths and guide her/him through improvement. On an organizational level, there is a need for assessment of social service providers' level of hope in order to better determine ways to consistently maintain social service providers in the field, thus decreasing risks to clients.

Over the past three decades there has been an increased interest in hope and its impacts on people. This interest began in the medical field and has become a more interdisciplinary interest. Much of the research related to hope has been conducted in the medical profession beginning in the early part of the 20th century. Hope theory has been

further defined and researched in psychology in the past twenty years. Most recently, Hope Theory has been introduced to Human Resource Development in business.

As a basic beginning to research on hope in the social service fields, Snyder (1989) began looking at stress, coping and the opposite of excusing. He worked with a number of researchers and offered a specific definition for hope in 1991 (Snyder, Irving & Anderson, 1991). There have been numerous scales created to measure hope in other disciplines primarily in the medical field. The Trait Hope Scale and State Hope Scales were developed to measure hope with psychiatric patients and college students aiding the transition of hope as a construct to hope as a theory.

Specifically, hope has been defined in a variety of ways since interest in the construct has begun. Most recently, in the field of psychology, hope has been defined as a relationship between a person's goals, motivation and planning to meet those goals. Specifically, hope is defined as "a positive motivational state that is based on an interactively derived sense of successful (a) agency (goal-directed energy), and (b) pathways (planning to meet goals)" (Snyder, Irving & Anderson, 1991, p.287). Hope is considered to be the goals that a person sets to obtain/attain in conjunction with the agency (motivation) that a person has and the pathways (routes and methods) chosen to move toward those goals.

The purpose of this research is to continue progress in developing hope as a construct and a theory. Specifically, this research will consider a field that has not been considered in the past in terms of hope: social service. This research will help define hope in a new area and test the validity of the Trait Hope Scale to better determine its ability to be generalized.

Purpose of the Study

As previously noted much of the research related to hope has been conducted in disciplines other than social work. In light of the lack of knowledge about hope in the social work profession, the proposed study explores the definitions of hope and the validity of the trait hope scale in the field.

Because the participants represented in this study are in a population that has not been considered in past hope research, the findings will add to the knowledge base related to hope/hope theory in looking at a new discipline as well as adding to the theory base in social work. Furthermore, new knowledge about the generalizability of the Trait Hope Scale will be determined. Although this study is a small step towards understanding hope better, the information gained will provide openings for further research in a new discipline with a new population.

Objectives

Specifically, the objectives of the proposed study are the following:

1. To determine if the Trait Hope Scale measures hope in social service providers
2. To test the validity of the Trait Hope Scale based on gender

CHAPTER II

Literature Review

This chapter will first provide a discussion of a current practice perspective in social services. The author will discuss hopelessness and the detriments that it can have on social service providers. Next, the development of hope definitions through history will be elaborated upon. Hope as a theory will be presented as the theoretical framework for the study. A history and analysis of measurement tools for hope will be discussed. Finally, the current research outcomes of measurement tools used in research and gaps will be presented and critiqued.

Strengths perspective is one of the most popular approaches to social service practice. It was developed as a response to the pathology model in which therapeutic focus was on the problem rather than possibilities (Table 1). Barker (1999) defines strengths perspective as an "orientation that emphasizes the client's resources, capabilities, support systems, and motivations to meet challenges and overcome adversity" (p.468). Although the strengths perspective has been defined in a variety of ways, there are five basic tenets of the model: 1. individuals have the capacity to grow, 2. focusing on strengths will enable individuals to grow, 3. individuals do the best they can, 4. human behavior is complex, making it difficult to predict behavior, and 5. clients know what is best for them (Staudt, Howard & Drake, 2001; Weick, Rapp, Sullivan & Kirsthard, 1989). The tenets of strengths perspective can be found in the Code of Ethics in terms of a practitioner's responsibility to clients.

The Social Work Code of Ethics identifies a social worker's "primary responsibility [as promoting] the well being of clients" (NASW, 1999, 1.01). Secondly,

Table 1: Pathology versus Strengths

PATHOLOGY	STRENGTHS
Person is defined as a "case" and symptoms add up to a diagnosis	Person is defined as unique; traits, talents, resources add up to strengths.
Therapy is problem focused	Therapy is possibility focused
Personal account aid in the evocation of a diagnosis through reinterpretation by an expert	Personal accounts are the essential route to knowing and appreciating the person.
Practitioner is skeptical of personal stories, rationalizations.	Practitioner knows the person from the inside out
Childhood trauma is the precursor or predictor of adult pathology	Childhood trauma is not predictive; it may weaken or strengthen the individual
Centerpiece of therapeutic work is the treatment plan devised by practitioner.	Centerpiece of work is the aspirations of the family, individual, or community
Practitioner is the expert on client's lives	Individuals, family, or community are the experts
Possibilities for choice, control, commitment, and personal development are limited by pathology.	Possibilities for choice, control, commitment, and personal development are open
Resources for work are the knowledge and skills of the professional	Resources for work are the strengths, capacities, and adaptive skills of the individual, family, or community
Help is centered on reducing the effects of symptoms and the negative personal and social consequences of actions, emotions, thoughts, or relationships	Help is centered on getting on with one's life, affirming and developing values and commitments, and making and finding membership in or as a community

social workers are called to "assist clients in their efforts to identify and clarify goals" (NASW, 1996, 1.02). In order to promote well-being in another person one must be aware of the strengths that person currently employs.

There has been minimal research on strengths-based treatment interventions (Staudt, Howard & Drake, 2001). Strengths perspective is considered to be more of a theoretical approach to practice rather than a practice model providing specified steps in an intervention.

A step beyond strengths perspective would be assessing a person's strengths in an effort to guide her/him toward setting goals which is a primary part of hope theory. Hope theory is a more defined method that considers specifically evaluating a person's strengths, considering her/ his systems of support and ability to propel her/him toward a goal. Once a person's agency, pathways and goals have been determined a social service provider can evaluate and assess with the client how to increase or maintain the person's level of hope. In order to work with the strengths and hope of a client, the strengths and hope of the social service provider must be considered. Creating goals and evaluating agency and pathways can be developed as an intervention with clients and social service providers to increase a person's level of hope.

Hopelessness can be considered as a way of feeling and acting (Farran, Herth, & Popovich, 1995). A person's hope can be threatened by being around others with low levels of hope, depleted energy, isolation, physical deterioration, concurrent losses and lack of information or feelings of devaluation (Farran, Herth, & Popovich, 1995). It is believed that hopelessness begins in childhood and develops throughout a person's life if there is not intervention (Erikson, 1982; Schmale, 1964). Hopelessness can leave a

person feeling discouraged, despaired, deenergized, entrapped by situations with the inability to form concrete plan and realize different paths to reaching goals (Farran, Herth, & Popovich, 1995). Hopelessness causes impaired thinking and leads a person to have low expectations. There are a number of characteristics that can clue one into the fact that a person is experiencing hopelessness such as: social withdrawal, psychological discomfort, feelings of incompetence and overwhelming (Farran, Herth, & Popovich, 1995).

In the long run hopelessness has been shown to be detrimental in a number of ways. Hopelessness is a direct link to mental illness, depression and suicidal ideation (Beck, Kovacs & Weissman, 1975; Fromm, 1968). People experiencing hopelessness also have an increased incident of physical health problems, especially cancer (Frankl, 1963; Grossarth-Maticek, Kanazir, Vetter, Schmidt, 1983; Richter, 1957). All of these detrimental impacts lead to a decreased ability to function thus creating unsuccessful attainment of goals. Specific to the social services field are issues of transference of hope from the social worker to the client or patient (Itzhaky & Lipschitz-Elhawi, 2004). There has been minimal literature related to hope and coping in social service literature and only in the medical social service field with AIDS patients. Even within this paucity of literature there is only one article discussing the level of hope among social service providers. Itzhaky & Lipschitz-Elhawi (2004) report that social service providers working with terminally ill patients often see things get worse with their clients and begin to have feelings of hopelessness and despair themselves which is then passed on to their clients.

There are a number of factors that play into a person's level of hope being high or raised: feelings of connectedness and a sense of control, having uplifting memories and affirmation of worth, have the ability to set goals and refocus time and have a number of cognitive strategies to reach goals (Farran, Herth, & Popovich, 1995). Additionally, a person's lightheartedness and other personal attributes play a role in her/his level of hope (Farran, Herth, & Popovich, 1995). According to Itzhaky & Lipschitz-Elhawi (2004) the role of a social service provider's supervisor and approach to supervision can have an impact on the provider's level of hope. Using analytical and cognitive approaches in providing education and support to the provider can help the person feel more hopeful in her/his job.

In discussions of human development many suggestions have been created and tested to develop and increase hope as a person grows and matures (i.e. using positive self talk, learning to laugh at oneself, making and maintaining friendships, viewing problems as a challenge). High hope people have been shown to fair better in athletics, academics and maintaining higher levels of physical and psychological well-being (Snyder, Thompson, Shorey, Heinze, 2003).

Hope theory has not been considered in social work to date. None of the current scales have been used to determine if they, in fact, measure hope in the social services fields. Additionally, despite the work that has been done with hope in other fields there has not been any research conducted with professionals. It is possible that differences exist in the strengths based practice of service providers dependent upon whether an organization employs hope based practices. Social work is a profession that would

benefit from increased knowledge related to hope because of its focus on reaching goals for the well-being of clients.

To instill hope in others one must have a sense of their own hope. With these responsibilities bestowed upon the social work profession, it would present as an important endeavor to strive to learn about hope and how to assist people in gaining knowledge about hope and maintaining hope.

History and Development

Hope has been discussed and researched in many areas including religion, mythology and philosophy, medicine, societal and political arenas, and academics. Arenas in which hope has been discussed has changed over time depending on what is societal importance at the time.

Initial quantitative, empirical research with hope has its roots in the medical field. Many of the research studies that have been conducted have explored the effects of hope on cancer victims and survivors. Researchers in the psychology discipline began examining hope in the early 1980s. This field is more similar to social work and will be the focus of the literature review.

In the 1960s, there was a rise of hope as the societal focus turned to the future and future planning. World events lead to a need to change "social, economic, cultural life… [it] make it possible to hope again" (Fromm, 1968, p. 21). Erickson's developmental stages included hope as being the basic need of a person (Elliot, 2005; Erikson, 1982).

The 70s, 80s, and 90s showed a different view of hope as perspectives turned more positive. Hope researchers began to provide a more cognitive base and definitions.

Hope Theory Definition Development

Historically, hope has not been clearly defined with terms that can be used in a variety of disciplines (Snyder, 1998). Hope is primarily a way of thinking, but emotions do play a role in the level of hope that a person maintains (Elliot, 2005; Snyder, 2002). Hope is a positive expectation for reaching goals (Frankl, 1992; Stotland, 1969). One of the first theoretical definitions provided is that hope is "an expectation greater than zero of achieving a goal" (Stotland, 1969, p.2). Nowotny (1989) reported a belief that "hope is activated when [people] encounter stressful events" (Snyder, 1998, p.423) and that hope is made up of "inner readiness, active involvement, spiritual beliefs, relations to others perceived future possibilities, and confidence in desired outcomes (p.423). Hope has also been defined hope as a construct "[involving] the realistic perception of upcoming positive outcomes, a feeling of confidence about one's plans to achieve goals, and the recognition of the importance of the interaction between self, others, and spiritual matters" (Herth, 1991; Snyder, 1998, p 423). Hope is value neutral and is not the same as trust, virtues or values (Snyder, 2002).

Historical Perspectives

Farran, Herth and Popovitch (1995) provide rationalization that Hope Theory can be explained by three theoretical perspectives: existentialism, social learning theory and development theory. In terms of existentialism, hope has been considered, historically, to be an event that is not considered outside the current context. Other thoughts about hope stem from a more social learning theory in which hope is the result of self regulation related to planning, creating, imagining and engaging (Farran, Herth & Popovitch, 1995).

Finally, Farran, Herth & Popovitch (1995) elaborate on Erickson's developmental model (Erickson, 1982) that hope is developed through early relationships and experiences.

Attributes

Farran, Herth and Popovich (1995) explain hope has having four attributes. Hope is experiential or gained from learning which they refer to as the pain of hope. Additionally, they report hope as being spiritual or faith based. This spiritual aspect is referred to as the soul of hope. Rational thought is also defined as being the mind of hope in which one maintains a reality base. Finally, the authors indicate that there is a heart of hope in relational characteristics (Farran, Herth & Popovitch, 1995). They consider these attributes to be the multi dimensional characteristics of hope.

Theoretical Framework

"Hope is a positive motivational state that is based on an interactively derived sense of successful (a) agency (goal-directed energy), and (b) pathways (planning to meet goals)" (Snyder, Irving & Anderson, 1991, p.287). This definition was created for use in the psychology discipline and appears to be most fitting with social work. Hope is an interaction of a person's agency and pathways in relation to successful goal attainment/obtainment.

Attainment of a goal refers to the successful accomplishment of a goal such as graduating. Obtainment on the other had is the ability to successfully get an item desired such as buying a home or car.

Goals can be discussed in terms of positive goals and negative goals. Positive goals are those things that can be achieved for the first time (i.e. graduation), maintenance of current situation (i.e. doing assignments and attending class) and

increasing current situation (i.e. participation in study groups and extra credit activities). Negative goals are those things that one can achieve to deter from happening (i.e. being fired from a job) or to delay from happening (i.e. being laid off from work). Goals fall into three categories of functioning: repair, maintenance and enhancement. Repair goals are set in order to fill a gap (i.e. registering for a required course). Ongoing goals are those things that are day to day focuses (i.e. studying for a class). Enhancement goals include overall desires to be sought (i.e. graduation).

People set goals for things that they either want to attain or accomplish. Once those goals are set they determine pathways to direct their work toward those goals. The pathways and alternative pathways lead to a person's agency. A person's agency also plays a role in the development of pathways (See Figure 1). Successful attainment of goals will then lead to the initiation of other goals, thus creating a cycle. Agency has been described as the motivation or willpower that a person has to make her/his goals known. Agency indicates a capacity to use pathways and have alternative pathways to reach goals. In more layman terms agency is the energy and motivation that one has that her/his goals will be met.

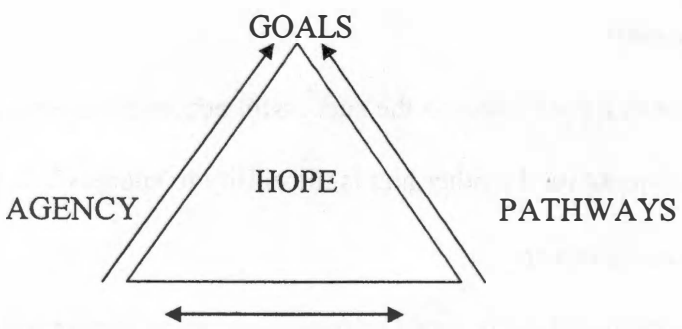

Figure 1 : GAP Interaction

Pathways or waypower are the methods and planning that a person will conduct in order to meet goals. The routes and alternative routes to attaining goal achievement are the way power or pathways. The can give a visual of thinking about how to get from point A to point B.

Hope is also defined as either being trait hope or state hope. Trait hope is that hope that someone has that is natural. It is lasting and enduring regardless of situations. It is related to how a person approaches life (Elliot, 2005; Farran, Herth & Popovitch, 1995).

The second type of hope, state hope, is more transient, and changes depending on the circumstances in which one is being asked to acknowledge her/his level of hope. State hope gives an indication of how hopeful a person feels about a current situation (Elliot, 2005; Farran, Herth, & Popovitch, 1995).

Beyond the two types of Hope, Snyder and colleagues (2000a; 2000b, 2002) discuss the differences between high- and low-hope people. Thoughts about goals lead to the emotions that a person feels (Snyder, 2000; 2000b). There is a general conception that barriers produce negative thoughts which would lead to negative emotions, but people who are considered to be high hope are more adaptive (Snyder, 2000a; 2000b). There is research that has shown that high hope people are better able to successfully meet their goals because they are able to view barriers as challenges and create multiple pathways for reaching their goals (1994a; 1994b). There are a number of things that have been shown to undermine hope: abuse/neglect, loss of parents or care givers and lack of consistent boundaries (Snyder, 1998).

Rules of Hope

Several authors have discussed the idea that there are four rules involved in hope and creating hope that are based on goals. There needs to be an emphasis on goals from setting goals to focusing on and planning for goals which has been labeled as prudential. Goals must maintain an element of being moralistic or socially acceptable. Goals must also maintain a priority to the person attempting to reach the goal. It must be of a vital interest. Finally, there is a need for a willingness to take action to attain/obtain a goal in order for there to be positive hope (Elliott, 2005).

Through the exploration of the historical perspectives attributes were developed to better understand hope. Rules further elaborate on the knowledge of hope as a construct and as a theory. The progression and increased understanding of these perspectives, attributes and rules have led to the creation of the most common definition of hope.

Hope began as a divine virtue before moving into the philosophical arena of discussion. Beyond being discussed hope was able to move into a more secular realm and become more of a scientific theme. Hope has since been considered an individual attribute that has been debated to be either stable or transient. Hope has been discussed as a vital outcome and mental state of individuals. Finally, hope has been most recently researched as a ubiquitous construct (Bloch, 1986) meaning that it is multifaceted: emotional and cognitive, involuntary and voluntary, subjective and objective, individual and social. Each definition and theory of hope provides an additional aspect of the construct. The different definitions provide a new lens through which to view hope. Hope definitions and explanations have grown and changed over time, but previous definitions and information are not completely discarded for the new.

Measurement Tools

In the past thirty years 16 tools have been created to measure the construct hope Table 2). These tools were developed in the medical field primarily. Some of them, however, were created for use in the psychiatric field. The development of hope measurement tools are still in the early stages (Farran, Herth & Popovitch, 1995) and are continuously being refined. All but one of the tools is self report survey instruments and range from 8-60 items. All of the items on the surveys are Likert type scale questions. These instruments vary in terms of complexity based on length and wording.

Stotland (1969) cited flaws with self report measures of hope being that the questions lend confusion for the responders. Also, as some of the instruments are long, it is difficult to ascertain the accuracy of the results when the scales are used with populations that are suffering physically or psychologically. Gottschalk (1974) attempted to alleviate these effects by using interviews and observations. It is the only verbal analysis scale and requires extensive training on the scoring component of using the scale in research (Farran, Herth & Popovich, 1995). The Snyder scales (Snyder, Harris, et al, 1991) were developed with consideration given to participants fatigue level and attention span. Snyder's hope scales account for these flaws in creating scales that have only twelve and eight items that are one line phrase items.

The scales that have been created over the past 30 years have been used primarily in the medical field. Most of the scales are more than 16 years old. The Herth Hope Scales (1991) have been used for the past 16 years, but there have been minimal studies conducted (Farran, Herth & Popovich, 1995). The scales have not been used long term or with varied populations.

Table 2- Hope Measurement Tools

Scale Title	Author	Year	Population	#/ Type of Items	Cronbach's Alpha Reliability
Gottschalk Hope Scale (GHS)	Gottschalk	1974	Psychiatric patients	Verbal Observa tion	.85
Hope Scale	Erickson, Post, Paige	1975	Undergraduate Students	30 Likert	.73-.78
Hope Index	Obayuwana	1982	Healthy Adults and Psychiatric Patients	60 Dichoto mous	
Hopefulness Scale	Mercier, Fawcett, Clark	1984	Healthy Adults and Older Adults	20 Likert	.87-.93
Stoner Hope Scale (SHS)	Stoner	1982	Cancer Patients and Older Adults	30 Likert	.93
State-Trait Hope Inventory (STHI)	Grimm	1984	Cancer Patients, Healthy Adults, Psychiatric Patients	40 Likert	.94-.98
Miller Hope Scale (MHS)	Miller and Powers	1988	Chronically Ill	40 Likert	.88-.93
Hope Index (HI)	Staats	1989	Undergraduate Students	16 Likert	.86
Nowotny hope Scale (NHS)	Nowotny	1989	Well Adults and Cancer Patients	29 Likert	.89
Herth Hope Scale (HHS)	Herth	1991	Cancer Patients undergoing Chemo	30 Likert	.75-.97
Herth Hope Index (HHI)	Herth	1992	Acutely, Terminally Ill Adults	12 Likert	.88-.97
Hopefulness Scale for Adolescents	Hinds and Gattuso	1991	Well Adolescents and Ill Adolescents		.76-.94
The Future Scale	Snyder, Harris, et al	1991	Psychiatric Adult Patients	12 Likert	.71-.76
Goals Scale for the Present	Snyder, Harris, et al	1991	Psychiatric Adult Patients	8 Likert	

Research has been conducted for 15 years with populations, using the Trait Hope Scale consistently. This research includes a number of populations including college students, psychiatric patients, veterans, cancer and spinal cord injuries patients and drug rehabilitation patients. Overall, the Snyder Hope Scales have been used consistently with multiple populations over the longest period of time.

Many of the scale developers have struggled with determining if hope is stable or transient. The Snyder scales account for each of these characteristics in that there is a scale for stable hope (State Hope Scale) as well as for dispositional hope (Trait Hope Scale) (Farran, Herth & Popovich, 1995).

Although some research has shown that there is not a difference in hope based on race or gender, there is a lack of empirical evidence with the majority of the scales. Snyder and colleagues have shown in their research with college students and athletes that there is no difference in hope as related to performance between men and women (Farran, Herth & Popovich, 1995).

The majority of the measurement tools were developed for use in the medical field. Three of the scales were developed for use with college students and psychiatric patients. Although the alpha reliability scores of the measurement tools are above average, the Snyder scales have demonstrated increased levels of reliability consistently with different populations and as determined by varied researchers.

Snyder Hope Scales

The State Hope Scale, formally titled "Goals Scale for the Present," consists of six items that are answered on an eight point Likert scale. The scale is comprised of three agency questions and three pathways questions. Each question is worded in a positive

tone and computes a score indicating the level of hope a person has at the moment of the testing. Higher scores equal higher levels of overall. The overall scale has been found to have a range of coefficient alphas to be = .82-.95 (Snyder, et al, 1996). The scale is made up of two subscales in which a tester can determine a person's level of pathway thinking with coefficient alphas = .74-.93 and agency thinking with coefficient alphas =.83-.95 (Snyder, et al, 1996).

The Trait Hope Scale or "The Future Scale" was created to be used with adults and has been tested in a number of arenas ranging from college students to psychiatric patients and in the medical field to measure the stable level of hope a person holds.

The original Trait Hope Scale was created with 45 items. The first research conducted with the scale was with psychology students at the University of Kansas (Harris, 1988). The original scale consisted of a 4 point Likert scale. After the preliminary analysis the scale was reduced to 14 items. The 4 agency items and 4 pathways items with the highest item remainder coefficients (>.20) were kept in the scale. There were 4 filler items added.

The current scale has twelve items to be answered on an eight point Likert scale. There are four questions related to pathways, four questions related to agency and four questions that are filler questions (Appendix A). Cronbach's alphas for the overall Hope Scale range from .74-.88. The agency subscale has been shown to have a Cronbach's alpha range from .70-.84 and from .63-.86 on the Pathways subscale (Cramer & Dyrkacz, 1998; Snyder, et al., 1991; Sumerlin, 1997).

The scale has been shown to have positive convergent validity and discriminant validity. The scale has been correlated positively or negatively as would be expected

with six other scales. Gibb (1990) showed that the Hope Scale correlated with the Generalized Positive Outcome Expectancies Scale at a .55 level (Fibel & Hale, 1978) and .58 with the Rosenberg Self Esteem scale (Rosenberg, 1965). Burger-Cooper's Life Expectancies Survey (1979) was correlated .54. Two Life Orientation Tests have been developed and both are positively correlated with the Hope Scale (Holleran & Snyder, 1990; Scheier & Carver, 1985) .50 and .60 respectively. The Hope Scale was appropriately negatively correlated with the Problem Solving Inventory at -.62 (Heppner & Petersen, 1982). A -.42 correlation was found with the Beck Depression Inventory (Beck, Ward, Mendelsohn, Mock & Erbaugh, 1961).

In testing the Hope Theory, Snyder (1991, 2002) found that the hope was sufficiently different when compared to a number of other theories such as optimism, self efficacy, self esteem and problem solving. Hope was compared to optimism as defined by two author groups: Seligman, Reivich, Jaycox & Gilham, 1995 and Scheier & Carver, 1985. Optimism was shown to focus on a person's agency or motivation rather than being multi faceted. There is a tendency to focus on the negative outcomes and attempting to avoid negative stimuli rather than considering internal and stable foci on reaching a goal. Similarly, self efficacy focused on only one aspect of hope: goals (Bandura, 1982, 1997). Self esteem was defined to be the judgment of one's worth related to goal attainment (Coopersmith, 1967; Hewitt, 1998). Hope has an effect on self esteem rather than the other way around. Although problem solving only indicated a focus on pathway there was a relationship with hope.

Research Outcomes

Hope has been examined in a variety of populations including cancer survivors and current cancer patients, people with terminal illnesses, burn victims, victims of racism, victims of violence, college students in both academics and athletics, outpatient mental health clients, combat veterans, elementary to high school students. There has also been research conducted to determine the differences of hope levels between men and women as well as the characteristic differences of high hope versus low hope people.

Qualitative research has been conducted looking at hope since the late 1960s. The data were collected through the use of interview, observations, group discussions and open ended questionnaires. Almost all of the qualitative research has been conducted in the medical field, with only 5 being in other areas. This medical research has been performed with adolescent and elderly oncology patients, children with disabilities and HIV patients. Other qualitative research has been conducted with college students and adolescent substance abuse. Additionally, there have been only two studies conducted primarily with people of a culture other than American. Averill, Catlin and Chon (1990) did research comparing American and Korean college students. Qualitative research was also done with critically ill Korean patients (Chung, 1990). There have been no multi cultural quantitative studies published. All of the qualitative studies had less than 60 participants except the studies with non-medical participants (N=150) and those used open ended questionnaire methods. These studies considered a variety of variables: physical symptoms, anxiety, depression, social support, religion/spirituality, mental health, personal control, coping, treatment settings, self esteem, life satisfaction, social and medical history and caregiver characteristics.

Farran, Herth and Popovich (1995) compiled a review of the hope research published in the past three decades. There have been less than 20 quantitative studies, not including studies using the Snyder Hope Scales, conducted about hope in a 16 year period: 1975-1991 (Farran, Herth, Popovich, 1995). The studies were conducted with the multiple scales that were first developed. None of the scales were used consistently over time. None of the previously created hope definitions, scales or research findings have come to the forefront as a leader (Snyder, 2000). Although the hope definitions have developed over time, based on previous definitions the research on hope seems to be individual and not connected with the other work being completed in the area (Snyder, 2000).

Since 1991, hope has been researched by various authors and researchers. The research has become more diverse in terms of populations and geographic locations, but specific attention has not been paid to potential variations in demographic characteristics such as gender. This research has been conducted using primarily the Snyder Hope Scales. Snyder has conducted the bulk of the research related to hope with colleagues and students (Farran, Herth & Popovich, 1995).

Current areas of research related to hope theory are divided into 4 major sections: academic, athletic, physical well-being and psychological well-being. Research in each area has demonstrated positive results reporting scores indicating that higher hope is correlated with higher levels of performance, coping, mental well-being and physical health.

The State Hope Scales have been used to measure hope with homeless veterans being treated for substance abuse (Irving, Tefler & Blake, 1997); college students

(Snyder, et al, 1996); and college athletes (Curry, Snyder, Cook, Ruby & Rehm, 1997).The State Hope Scale only considers a person's level of hope at one point of time and is based on her/his current situation.

On the other hand, the Trait Hope Scale considers the long standing hope a person regardless of the situation a person is currently experiencing. The Trait Hope Scale was first administered in 1985, with the results being published in 1988 (Harris, 1988). Since completion of the Trait Hope Scale, it has been used more often than other scales in the past 14 years with more than 15 studies in multiple populations (Table 3).

Health psychology has given great consideration to the effects of trait hope on both primary prevention and secondary prevention. Primary prevention such as taking care of one's body through exercise, diet and regular check ups are considered to be

Table 3- Trait Scale Research

Population	Author/Year
Undergraduate college Students	Cramer and Dyrkacz, 1998 Magaletta and Oliver, 1999 Range and Penton, 1994 Snyder, Harris, et al, 1991 Snyder, 1999 Summerlin, 1997
Graduate Students	Onwuegbuzie and Snyder, 2000
Psychiatric Outpatients	Pearlman, McCann & Johnson, 1990
Psychiatric Inpatients	Irving, Crenshaw, Snyder, Francis & Gentry, 1990
Adults with Spinal Cord injuries	Elliott, Witty, Herrick & Hoffman, 1991
Adventitiously Blinded Older Adults	Jackson, Taylor, Palmatier, Elliott, & Elliott, 1998
Elderly Women	Westburg, 2001
Women undergoing Treatment for Breast Cancer	Stanton, Danoff-Burg, et al, 2000
Persons in Drug Rehabilitation Programs	Seaton & Snyder, 2001
Veterans with Posttraumatic Stress Disorder (PTSD)	Crowson, Frueh & Snyder, 2001

factors aimed to reduce the potential for illness. High trait hope people have been shown to follow these preventative measures more frequently than low hope people. Secondary prevention, directed at reducing a problem once it has appeared, includes things such as treatment compliance with medication and testing. Physical well-being studies have considered hope in people with chronic pain, cancer, diabetes, and asthma. Research results have indicated that high hope people are more inclined to have or learn coping skills for dealing with their illness and adhere to treatment plans. High hope people have also, reported lower levels of distress related to their illness and fewer doctor visits.

Research results have indicated that performance in athletic competition is better depending on the competitor's level of trait hope. Research has been conducted with both males and females in university track competition. Results indicated that athletes with higher hope improved their success rate by 56% from the beginning of a season until the end. Research with girls in a summer camp for athletes reported that girls with higher levels of hope were less likely to think about quitting activities. One study conducted with athletes allowed for a group of students to participate in a course on hope. These athletes were followed for the next year. It was determined that they showed improvement after the course and were able to maintain their level of success. Research with athletes and hope is still in the early stages of investigation.

Areas of academic research have reported increased grade school achievement test scores and high school GPAs with increased hope. GPA level is also higher for college students with a higher level of trait hope. Snyder, et al (2000) reported that hope is predictive when controlling for IQ, self esteem and previous grades. They reported that the predictivity of hope related to GPA was found after following 200 students (100

females/100 males) for 6 years. High hope students have a higher graduation rate than those who have lower levels of hope. Authors have correctly speculated that high hope teachers are more encouraging to students in reaching their goals. Hope scales have been positively correlated with teacher encouragement scales (r=.49) (Culver, 1992).

Hope in terms of psychological well-being has been tested with psychology students and inpatient psychiatric patients. Multiple authors have reported that high hope people have stronger and more attachments with other people therefore are less likely to be lonely like their low hope counterparts. High hope people indicated that they have the ability to call on friends for help when they need support. There are fewer reports of suicidal ideation and attempts among high hope people. High hope people reported being more inspired, energized and challenged by life. High hope people tend to learn from their past experiences and are more tolerant and forgiving of others. Research has also shown that people who have lost their parents to death or whose parents are divorced are more inclined to be low hope people.

Gaps in Research

Most of the original research was conducted in the medical field and has slowly moved into the social sciences. Research is with limited populations (cancer, elderly, students, psychiatric patients) and other than the studies with students all results are based on people who are patients. Studies have become more diverse in the past 6 years although there has been almost no work that specifically compares different races or ages and little research considering gender differences.

There is a general lack of information and literature on hope or hope theory in the social work field. Research indicates that hope measurement tools are effective in other

fields of studies with a variety of populations, but there is a need to look at hope with employees and more specifically with social service providers. It is possible that a person's hope plays a role in her/his ability to meet goals and be effective in the workplace. Scales created to measure hope have never been used to assess hope in professionals or employees. They have not been applied to diverse social service client populations or social service providers.

The research that has been performed in the social sciences has been with psychology students or psychiatric patients working with a psychologist. There is no research designed to compare hope in one person to that of another person based on characteristics of the individual or an environment in which the person exists.

There is a need to test the hope scales with social service providers to determine if it actually measures hope with this population. If the Snyder Trait Hope Scale model fits the context of social service providers well, there are many possible implications for developing interventions to increase levels of hope with social service providers and ultimately clients.

Research Questions

The present study proposes to introduce Hope Theory to the Social Work literature in terms of social workers.

1. Does the trait hope scale measure perceived levels of hope in social services providers?
2. Is there a difference in the trait hope scale measures based on gender?

CHAPTER III

Methodology

In the academic realm, hope has been redefined a number of times in the past decade with the basic premise remaining that it is a cognitive, motivational model that has a basis in strengths concepts (Snyder, 2002). As previously stated, hope is defined as "a positive motivational state that is based on an interactively derived sense of successful (a) agency (goal directed energy) [and] (b) pathways (planning to meet goals)" (Snyder, Irving, Anderson, 1991, p.291). Hope exists as either stable or dispositional (individual characteristics- Trait) or as a temporary frame of mind (current state- State) (Snyder, 2002). This sought responses and information regarding dispositional or trait hope using the Snyder Trait Hope Scale (Appendix A) and contributes to the overall knowledge base related to hope theory by using the Snyder trait hope scale to explore hope in a new population.

This chapter reports the elements specific to the proposed study. The author first discusses the design of the study followed by a description of the sources from which the data were obtained. A description of the variables that were analyzed is provided. Instrumentation and data collection methods employed in the study are described. Finally, a discussion of the data analysis methods is offered.

Design

This study is preliminary research conducted on hope with social service providers. This study considers two dimensions of hope as defined by Snyder: agency and pathways. This study tests a measurement model of the Trait Hope Scale to determine its validity for this new population. The study also tests a separate

measurement model by gender to determine fit for males and females. The goal of the research was to begin exploring a new area of theory in social work. Data was obtained from social service employees through a self-administered survey at one point in time.

Data Source

A purposive sample was used with social service providers providing intensive case management services in a local organization. Case managers in the program were considered the units of analysis providing the primary information. All subjects who participated in the study are adults who are working in the social services field. For the purpose of this study the terms socials service provider, social worker, case worker and case manager will be used synonymously.

A private, non-profit organization in the southeastern United States that provides case management to youth was used as the sample source. Case managers are required to have a least a baccalaureate degree of education a minimum of one year of experience with children and adolescents. Intensive case management services consisting of counseling, referral and support are provided on a weekly basis (or more frequently) which are provided as a preventative measure with children/adolescents who are at risk of being placed in state custody. All the case managers in the southeastern region were given the opportunity to participate voluntarily. Participation included variation in age, geographic location, ethnicity and gender. All case managers have at least a bachelor's degree. If there are persons with less that a four year college degree they were excluded.

Variables

In this study pathways and agency were tested as individual constructs. Each construct consists of four indicators. The scale has twelve items to be answered on an

eight point Likert scale (Appendix A). There are four questions related to pathways, four questions related to agency and four questions that are filler questions. Cronbachs alphas for the overall Hope Scale range from .74-.88. The agency subscale has been shown to have a Cronbach's alpha range from .70-.84 and from .63-.86 on the Pathways subscale (Cramer & Dyrkacz, 1998; Snyder, et al., 1991; Sumerlin, 1997). Scores for the individual scales as well as the overall hope score were calculated for each respondent. Similar results are expected.

Gender is a nominal level variable operationalized as female or female that was collected to test potential different model fits of the scale.

Instrumentation

The survey created for the purpose of this study consists of five sections: organizational characteristics, fields of practice, organizational setting, Trait Hope Scale, and individual demographics (see Appendix B). Only responses to the Snyder Trait Hope scale and gender were used in this research.

The survey for the study was piloted with a sample of social service providers in a similar setting to those of the study sample. The data were collected in the same manner in which the study data was collected with the actual research sample.

Data Collection

Human Subjects

All study participants were treated in accordance with University of Tennessee Human Subjects Review requirements as well as the research regulations of the organization (Appendix C). All efforts were made to respect the anonymity of persons

participating in the study and in no way had any known impact on the relationship between case managers and supervisors or with their employment.

Anonymity

Data for the current study were obtained from case managers employed in an organization providing intensive in home case management services to children and their families. This researcher obtained permission from the research department, human resources and program administrators at the organization to provide survey materials to be provided to participants during a regularly scheduled staff meeting. Case managers were asked to complete their survey in a staff meeting without the researcher or supervisor present. Participants were given the option of not participating. Case managers were asked to return their survey even if they chose not to respond. The survey did not contain any information that would allow the respondent to be identified. Surveys were sealed in a self addressed stamped envelope (SASE) and returned to the researcher by the individual respondent to prevent the supervisor from having access to the surveys once they were distributed.

Procedures

The researcher worked initially with the research director who facilitated the process of getting information about the study objectives, time requirement of the employees and the methods of obtaining data to the administrators of the case management programs. These meetings were held via telephone and email. After permission was obtained from administrators, the researcher contacted the individual supervisors, via email, due to the number of offices across the region. They were provided information regarding the study and the procedures that would be used. They

were given a copy of the survey (Appendix B) and the informed consent form (Appendix D) to review. They were asked to not share the information with the case managers until time for the survey to be administered. Once each supervisor provided consent for their case managers to be included in the study a packet of survey materials were sent to the supervisor. This packet included a letter (Appendix E) to the supervisor with script instructions for distributing the survey (Appendix F). A copy of the informed consent, survey and a self addressed stamped envelope were included for each employee.

The supervisors were instructed in the letter to designate a counselor to distribute the survey using the script. This helped ensure that the counselors did not feel coerced to complete the survey. This counselor was asked to introduce the research project and point out that participation was voluntary. S/He provided a copy of the informed consent to each employee and allowed time to review their rights. Case managers were not asked to sign the consent in order to preserve their anonymity. Their completion of the survey is considered to be their consent. The informed consent contains contact information for the researcher. Therefore, case managers were asked to retain their copy of the consent in the even that they would like to contact the researcher in the future.

After everyone had an opportunity to read the consent the designated counselor provided each person with a copy of the survey and a self addressed stamped envelope. The case managers were instructed to place their survey in the envelope and seal it whether they completed it or not. This prevented anyone from knowing who did and did not complete the survey. Each person was responsible to drop their sealed survey into the mail. A follow up email was sent to each supervisor a week after the surveys were distributed requesting that they remind their case managers to return their surveys.

Data Analysis

All data collected was scored and entered by the investigator. A high response rate and minimal missing data was expected due to surveys being administered during scheduled work time. A measurement model was evaluated that included the endogenous (observed variables) and exogenous variables (constructs).

Univariate Analysis

Obtained data were analyzed initially using univariate descriptive analysis to ensure that there are no data entry errors. Univariate analyses were also conducted to provide frequencies and descriptions of individual attributes in describing the sample. The mean scores of the agency, pathway and hope scales were obtained to consider differences between genders and races.

Assessing the Model

Measurement models specifying the relationships between the measured scale items and the constructs (agency and pathways) as a set of factor loadings were tested using Structural Equation Modeling (Figure 2, see page 34). The measurement models describe how well the observed indicators serve as a measurement instrument for the latent construct. As Joreskog and Sorbom (1993) indicate, most observed variables trying to measure abstract constructs contain sizable measurement errors and the measurement models take these errors into account. Structural Equation Modeling allows the latent construct to account for the intercorrelations of the observed variables and estimates the reliability of the observed measures to the latent construct, therefore summation is not necessary.

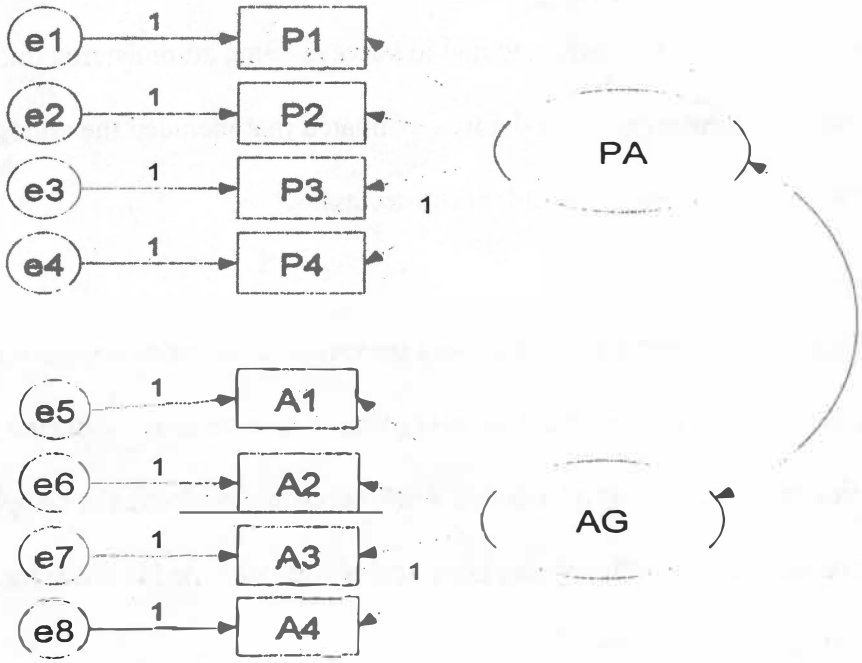

Figure 2: Tested Measurement Model

CHAPTER IV

Results/ Findings

Univariate Analysis

A high return rate was expected for the surveys and was achieved. Surveys were sent to 199 case workers and 104 (52.3%) returned the survey completed. All of the surveys that were returned were completed. There was no missing data from any survey. Frequency and descriptive analysis showed that there were no data entry errors.

Categorical Variable.

There were fewer males than females in the population resulting in minimal diversity found in the sample. Table 4 shows the characteristics of the sample (page 37). The majority of the respondents were white (77.9%) and female (81.7%). Of those responding to the survey there were only 2 case workers who noted that they were a race other than Caucasian or African American.

Table 4: Demographic Characteristics

Variable	**Frequency (N=104) or Range**	**Valid Percent or Mean**	**Standard Deviation**
Gender:			
Female	85	81.7%	
Male	19	18.3%	
Race:			
White	81	77.9%	
Non-White	23	22.1%	
Degree:			
Bachelor	38	36.5%	
Master	65	62.5%	
PhD./M.D	1	1.0%	
Age	22-68	32.16	9.24
Years of Experience	0.1-25.0	5.38	5.38
Tenure in Current Employment	0.1-7.0	1.82	1.47
Salary	$23,000-$43,000	$30,130.94	9,671.54

One of the respondents indicated that s/he was Biracial (African American/Caucasian) and the other reported identifying her/himself as Biracial (Caucasian/Asian American). The race variable was recoded to be dichotomous with white and non-white as responses. It was expected that the majority of the case workers would have a Bachelor level education due to that being the minimum requirement, however, more than half of the respondents indicated that they had obtained a graduate degree in a social service field (63.5%).

The means of the scale scores for Agency, Pathways and the Trait Hope Scale were compared for females and males (Table 5, see page 37). Although none of the differences were found to be significant, females scored higher than males on each of the subscales as well as the overall scale. Based on research conducted with this scale no significant differences were expected.

Additionally, the mean scores were compared between whites and non-whites in the sample. Although the mean scores for white respondents were higher than those of non-white respondents these differences were not significant on any of the scales (Table 6, see page 37). Previous research has reported similar results of no significant differences in races.

Interval Variables

Respondent ages ranged from 22-68 years old with the majority of the respondents reporting that they were in their late 20s and early 30s (Mode=29). Seventy-eight respondents (75.0%) reported having experience in the social service field ranging from 1 month to 25 years prior to their employment in their current organization. Current tenure of the case workers ranged from 1 month to 7 years. Salaries of the case workers

Table 5: Comparison of Means Between Genders

Scale	Females	Males	F Statistic	Significance
Agency	27.51	26.16	2.81	.097
Pathway	26.56	26.37	.061	.806
Trait Hope Scale	54.07	52.53	1.15	.286

Table 6: Comparison of Means Between Races

Scale	White	Non-White	F Statistic	Significance
Agency	27.36	26.47	.344	.559
Pathway	26.91	26.74	.133	.716
Trait Hope Scale	53.83	53.65	.017	.897

ranged from $23,000-$43,000 as reported by themselves. One case was eliminated from analysis as an outlier with a reported salary of $100,000. There was also variance in salary level based on geographic location of the respondent's office. The respondents included entry level case workers, senior case workers, and supervisors with the mean salary being $30,130.94.

Scale Frequencies

Frequency statistics were calculated for each item on the scale (Table 7, page 38), each construct and the total scale. Each item on the scale has a potential range of 1-8. Although there are no reported cut off scores noted in the literature regarding the items or scales, the respondents appeared to have high (positive) levels for each question in the scale. The following questions were considered to be filler questions and were not included in the scale: I feel tired most of the time; I am easily downed in an argument; I worry about my health; and I usually find myself worrying about something. Some of the filler questions, focusing on negative aspects of life, had moderately high scores which may be attributed to the fact that the case workers are on call 24 hours a day 7 days a

Table 7: Trait Hope Scale Items

Scale Item	Mean (N=104)	Standard Deviation
I can think of many ways to get out of a jam	6.88	1.02
I energetically pursue my goals	3.88	.992
There are lots of ways around any problem	6.72	1.19
I can think of many ways to get the things in life that are most important to me	6.55	1.11
Even when others get discouraged, I know I can find a way to solve the problem	6.38	1.02
My past experiences have prepared me well for my future	6.95	1.11
I've been pretty successful in life	6.83	.99
I meet the goals that I set for myself	6.61	.98
Filler Items		
I feel tired most of the time	4.94	1.86
I am easily downed in an argument	2.91	1.68
I worry about my health	4.28	2.03
I usually find myself worrying about something	5.50	2.01

week. Most respondents reported that they work more than 40 hours per week (M=53.59, SD=9.32).

The individual constructs (pathways and agency) were made up of 4 questions each and had a range of 4-32. Agency scores (M=27.26, SD=3.2) in this sample were higher than the pathway scores (M=26.53, SD=3.12). The overall Trait Hope Scale consists of all the questions from the constructs and has a possible range of 8-64. The sample reported high trait hope with a mean score of 53.79 (SD=5.69). The level of Cronbachs alpha scores with this data were found to be in the same ranges for the scales as have been found in the literature. The agency subscale had an alpha of .79 with the literature providing scores in a range of .70-.85. Similarly, the pathway subscale had an alpha of .69 within the literature range of .63-.86. The literature reports a range of .74-.88 and this data demonstrated an alpha level of .83 for the overall hope scale.

Structural Equation Model

Structural equation modeling addresses the problem of one-to-one correspondence for observed variables and theoretical constructs (Zimmerman, 1990). Two models were compared initially analyzing an uncorrelated model of the constructs and a model considering the correlation between them (referred to as the proposed model). Additionally, the model was run without males to determine if there were differences in fit in the model.

The theoretical variables were defined as agency (AG) and pathways (PA). Eight observed variables were used to represent the latent variables. The observed variable that was fixed at 1.0 was the same for agency and pathway (P4 and A4).

Maximum Likelihood Estimation (MLE) was used due to the fact that theoretical constructs and measurement error can be represented in the model (Bentler, 1980). MLE is considered to be the most common method of computing coefficient estimates in the literature. All of the analyzed models were recursive.

The chi-square score and model significance level were considered initially for each model to determine if the model could be accepted or rejected based on that information. Significance levels are not important in SEM due to the fact that the model is looking at individual effects. Chi-square scores should not be significant and are shown to be a "badness of fit." If this score is shown to be significant, the model must be rejected regardless of significance of the path coefficients.

With a sample size that is considered to be small (<200) the relative chi-square (CMIN/DF) score is more reliable because it is less dependent upon sample size. Carmines and McIver (1981) reported that an appropriate CMIN/DF should be in the

range of 2.1-3.1, while Kline (1998) indicated that a score less than 3.0 was also acceptable.

Secondly, the parameters of the model were given consideration. Standardized regression weights were used in determining the strength of the relationship between the constructs and the indicators. Each standardized regression weight has a standard error value, critical ratio value and significance level. Standard error values do not have cut off levels per the literature, but are considered to be indicative of a poor model fit if they are found to be extremely large or small. Critical ratio values are the test statistics in structural equation modeling and are considered to be statistically significant if they are >1.96.

Third, several fit indices were considered to determine goodness of fit for the model. Fit indices are considered in an attempt to rule out a bad model. Kline (1998) recommends the use of at least four tests to reflect diverse criteria. The fit indices report the percentage of covariation in the data that can be reproduced by the model and scores >.90 are considered to be acceptable, with scores of >.90 being a superior fit (Fan, Thompson & Wang, 1999). The normed fit index (NFI), relative fit index (RFI), incremental fit index (IFI), comparative fit index (CFI) and root mean square error of approximation (RMSEA) were analyzed. Each of the fit indices are measured in a range of 0-1 with 1 being a perfect fit, except RMSEA. RMSEA scores should be <.05 to be considered acceptable in a model. These four indices were chosen for analysis due to having been adjusted to account for smaller sample sizes.

Uncorrelated Model

The first analysis included all races and genders in an uncorrelated measurement model (Figure 3). An examination of the parameters found that each standardized regression weight was significant (Table 8, see pg. 41). The goodness of fit statistics suggested that the measurement model did not fit the data well with a chi-square of 72.12 with 20 degrees of freedom (p=.000). Additionally, the relative chi-square score (CMIN/DF= 3.61) was found to be higher than the conventional range of acceptable scores. Furthermore, all other goodness of fit indices used in this analysis indicated a poor fit for this model (NFI-.728; RFI=.619; IFI=.787; CFI=.780; RMSEA=.159). This model was tested to validate that the constructs do not work when separated as well as when they are correlated as has been shown in the literature.

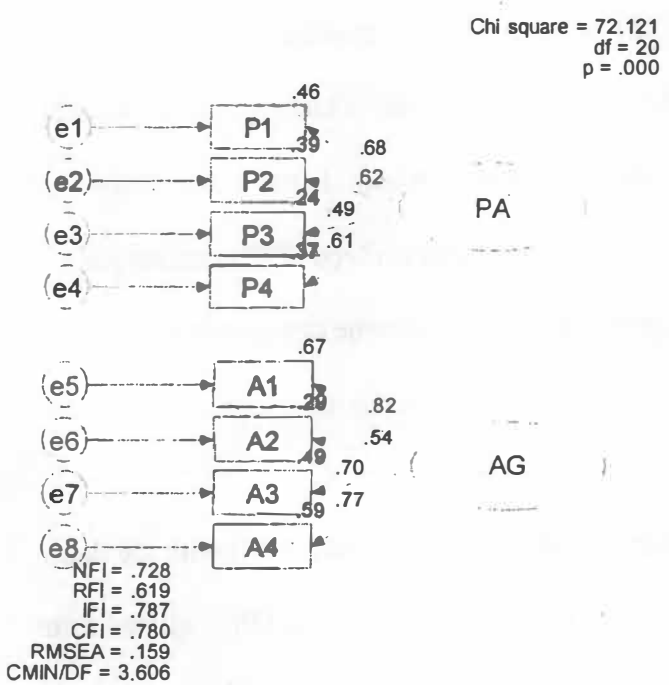

Figure 3: Uncorrelated Model

Table 8: Uncorrelated Model Parameters

	Standardized Regression Weight	**Standard Error (S.E.)**	**Critical Ratio (C.R.)**	**Significance (p)**
P4←PA	.612	*		
P3←PA	.488	.242	3.577	**
P2←PA	.625	.288	4.132	**
P1←PA	.676	.264	4.202	**
A4←AG	.768	*		
A3←AG	.699	.142	6.479	**
A2←AG	.537	.158	4.997	**
A1←AG	.818	.152	7.078	**

* Indicators were set at 1.0 in the model specification
** Significant at the 0.01 level

Proposed Model

The second analysis added a correlation between the constructs agency and pathways (Figure 4, see pg. 43). Again, the parameters were found to be significant (Table 9, see pg.43). All of the indicators appeared to have a strong relationship with the construct. The agency indicators had the lowest standard error scores. The indicators related to agency were found to have higher critical ratio values and regression weights than pathways which was the case with the uncorrelated model. In the uncorrelated model variables P3 and A2 were found to have lower standardized regression scores. This held true in the correlated model for variable A2. When the constructs were correlated, however, variable P3 demonstrated the highest regression score (.623) on the pathway construct.

The goodness of fit statistics suggested that this model did fit well with the data with a chi-square of 24.11 with 19 degrees of freedom (p=.192). This demonstrated a chi square improvement over the uncorrelated model with one degree of freedom of 48.01, p<.05. This significant difference between the uncorrelated model and the proposed

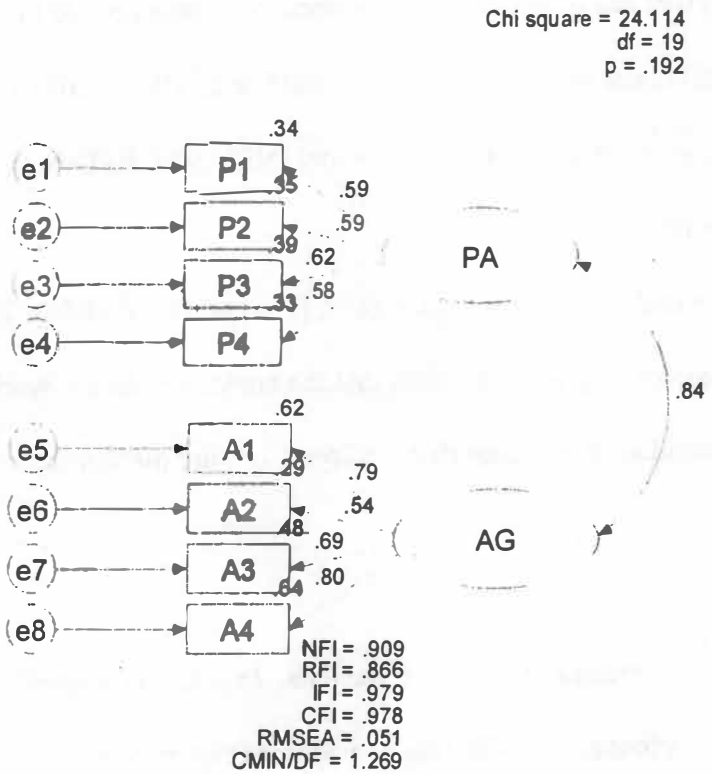

Figure 4: Proposed Model

Table 9: Proposed Model Parameters

	Standardized Regression Weight	**Standard Error (S.E.)**	**Critical Ratio (C.R.)**	**Significance (p)**
P4←PA	.578	*		
P3←PA	.623	.259	4.526	**
P2←PA	.595	.273	4.395	**
P1←PA	.587	.234	4.356	**
A4←AG	.799	*		
A3←AG	.691	.128	6.845	**
A2←AG	.541	.146	5.260	**
A1←AG	.791	.128	7.814	**

* Indicators were set at 1.0 in the model specification

** Significant at the 0.01 level

model indicates that the model that has been used in other research is the superior model. The relative chi square was well under the acceptable 2.1 level (CMIN/DF= 1.269). Other goodness of fit indices also suggested a good fit for this model (NFI=.909; RFI=.866; IFI=.979; CFI=.978; RMSEA=.05).

The correlation between agency and pathways was .836 (C.R.(104)=4.084, p<.000). The demonstrated change in goodness of fit gives indication that the constructs do not work independently while the high correlation indicates that the constructs are measuring similar concepts.

Alternative Model

The correlated model was shown to fit well with the data. In order to determine if this is the best possible model an alternative model was considered (Figure 5, see pg. 45). Rather than measuring the items on separate constructs, they were all loaded onto one construct (H). This particular model has not been tested in other research.

Again, the parameters were found to be significant (Table 10, see pg.45). All of the indicators appeared to have a strong relationship with the construct. The standard error and critical ratio scores appeared to be more equal when the items were all fit to the same construct. Although the strength of the relationship decreased for each of the indicators variable P3 continued to be considerably higher than the other variables that it has been grouped with. The goodness of fit statistics suggested that this model did fit well with the data with a chi-square of 30.482 with 20 degrees of freedom (p=.062). However, the chi square score was higher in this model than in the proposed model with the p value being much lower and closer to the level of significance. There was a significant difference in the chi square change between this model and the proposed

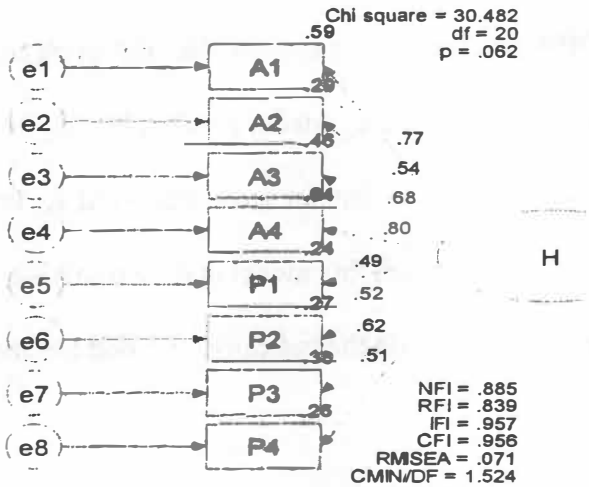

Figure 5: Alternative Model

Table 10: Alternative Model Parameters

	Standardized Regression Weight	**Standard Error (S.E.)**	**Critical Ratio (C.R.)**	**Significance (p)**
P4←PA	.510	*		
P3←PA	.620	.300	4.408	**
P2←PA	.521	.301	3.965	**
P1←PA	.494	.254	3.824	**
A4←AG	.798	.302	4.983	**
A3←AG	.679	.280	4.629	**
A2←AG	.536	.284	4.038	**
A1←AG	.766	.299	4.903	**

* Indicators were set at 1.0 in the model specification
** Significant at the 0.01 level

model with the chi square change of 6.37 with one degree of freedom ($p<.05$). The relative chi square was higher than in the proposed model (CMIN/DF=1.524), but still within the range of acceptable scores. Other goodness of fit indices were not as clearly defined as in the proposed model. Two of the indices suggested a good fit for this model (IFI=.957; CFI=.956). The remaining indices however, did not show a good fit for this model (NFI=.885; RFI=.839; RMSEA=.071). Although this model is shown to have goodness of fit, it appears that the correlated model with the indicators divided between 2 constructs is a better fit for the model.

Correlated Model without Men

The third analysis considered the measurement model when removing men from the sample (figure 6). The planned measurement model to compare females

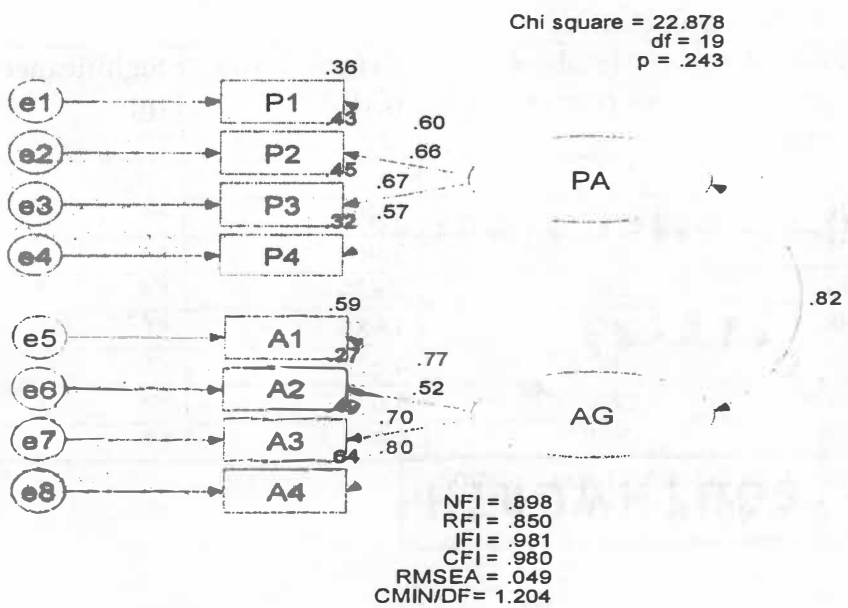

Figure 6: Correlated Model without Men

and males could not be completed due to the limited diversity between genders.

The results of this analysis were completely consistent to those found in the proposed model. Standardized regression weights ranged from .568 to .673 on the pathways construct and .520 to .802 on the agency construct indicating strong relationship between the indicators and the constructs. All parameter estimates were found to be significant (Table, 11).

The goodness of fit statistics suggested that this model also fit well with the data with a chi-square of 22.88 with 19 degrees of freedom (p=.243). The relative Chi square score (CMIN/DF= 1.100) and RMSEA (.035) were lower than the scores found with the correlated model using the entire sample. Other goodness of fit indices were not as strong in this model with two of the indices reaching the acceptable level of <.90 (IFI=.951; CFI=.936), but 2 other indices falling short (NFI=.639; RFI=.8468). The lower values are possibly related to the decreased sample size when the men were removed.

Table 11: Correlated Model without Men Parameters

	Standardized Regression Weight	**Standard Error (S.E.)**	**Critical Ratio (C.R.)**	**Significance (p)**
P4←PA	.577	*		
P3←PA	.696	.281	4.214	**
P2←PA	.667	.333	4.377	**
P1←PA	.626	.267	4.321	**
A4←AG	.871	*		
A3←AG	.705	.129	6.378	**
A2←AG	.573	.177	4.304	**
A1←AG	.772	.141	6.975	**

* Indicators were set at 1.0 in the model specification
** Significant at the 0.01 level

CHAPTER V

Discussion

Overview of Significant Findings

Analyses were conducted to determine if the 2 subscales (agency and pathway) of the Trait Hope Scale are measured in the social service population as they have been with other populations. The constructs, agency (motivation) and pathway (methods), were analyzed to determine if the survey questions within the scale that were supposed to measure them actually did measure those ideas. The model proved to be a good fit of measurement when the constructs were correlated and analyzed together. Since a good fit was found with the correlated model, an alternative model was tested to determine if there was another model that would fit as well. This was not found to be true. These results demonstrate that the measurement tool is a reliable instrument with social service providers which means that the measurement tool could be valuable to use in a variety of ways in this field of practice.

The model was also analyzed with only the females being included. There were similar results found when this analysis was conducted providing some minimal evidence that the scale measures agency and pathway the same for men and women.

Limitations of Study

The small sample size was a limitation of the study even though positive results were found. Literature related to structural equation modeling has shown that a small sample size is considered to be <200. Measures tend to overestimate goodness of fit when a small sample is used which is why RMSEA and CFI were considered in this

study. RMSEA and CFI are less sensitive to sample size than the other fit indices (Fan, Thompson, & Wang, 1999).

Maximum Likelihood Estimation is based on multivariate normality. Sample size will have an effect of the violations of the normality. Normality may not have been met with this sample leading to results that may be biased. There are other estimation processes, but they were not considered for this study.

Another limitation of this study is minimal diversity. The model could not be measured completely comparing groups due to a lower response rate from men in the sample.

Implications for Research

Having found that the measurement tool is valid, there are numerous implications for the future of hope in social work. This initial analysis of the Trait Hope Scale opens the door for further research. The positive results of the study have implications on the theoretical base in social work. Additionally, there are implications for social work education and practice.

This study is preliminary work that has been conducted with the Trait Hope Scale in social work and with professionals in service roles. There is much work remaining in understanding the concept hope and its measurement. The results indicate that the tool is reliable in the social service field in measuring a person's agency (motivation) and pathways (methods for reaching goals). This tool was not known in social work prior to this study. The first implication for research is the need to test the model with a different sample to further test the reliability of the subscales and the overall Trait Hope Scale.

The next step would be continued examination of the validity of the scale in social services.

This tool has been tested minimally with different races and genders. The results of this study did not show significant differences between the groups, but the sample size was a limitation. The second implication for future research is retesting the measurement models with larger samples that are more diverse. There is a need to confirm that the scales measure agency, pathway and hope the same for men and women and people of different races in order for the scale to be most effective and useful in social work.

The next step would be to determine possible characteristics having an impact on a person's agency, pathway and hope. Predictors of hope have not been researched extensively. This would allow for increased understanding of hope as well as possible ways to raise a person's level of hope.

Finally, there is a need to further research hope to determine its impact on a person's employment in terms of burnout and turnover. If we can find out how hope is related to the outcomes of burnout and turnover, then it is possible that interventions could be developed to prevent these issues from occurring in the social service field.

Implications for Theory

The results of this study provide positive implications for theory in social work. Hope Theory is recognized in the medical field and in psychology. It has been defined with descriptions of logical relationships that appear to exist between agency, pathways and goals. There has been research to back up the rationality of Hope Theory. The Trait Hope Scale appears to measure agency, pathways and hope in social service providers in an objective way. Theories have historically been the guiding factor in research. Hope

Theory could be influential in future research with social service providers related to burnout and turnover. Additionally, with continued research and understanding of hope theory practical interventions based on a theoretical model could be developed for use in practice.

Implications for Education/Practice

The social work discipline does not have a theory such as Hope Theory. The measurement tool provides objective results about a person's agency (motivation) and pathways (methods) for meeting goals. This tool could be used in a variety of ways and settings in the social work field both in social work education and practice.

It would be beneficial to teach social work students how to use this tool in the field. This tool could be used by professors to evaluate their students' level of hope at the beginning of the semester. This would also allow students to have a good understanding of where they need to focus their attention during the course of their education whether it is with their motivation or with their methods for reaching goals. This tool could be used in practice courses, field placements and practical skills labs offered by the social work programs.

In the field social workers could use this scale with their clients. Most social workers begin working with a client by assessing her/his strengths and determining where is the best place to begin working with that client. The Trait Hope Scale would be a valuable addition to this practice in allowing the social worker to have an objective measure of where the client is focusing. It would allow the social worker and the client to determine if the person has the motivation needed to begin working in treatment. The scale would also allow the worker to assess the person's problem solving skills in

learning about their current ability to create methods for reaching her/his goals. The Trait Hope Scale and focus on goals could aid the social service provider in creating treatment interventions that are most likely to be effective.

Likewise, the Trait Hope Scale could be a beneficial tool in supervising social workers/service providers. This tool could be used when a person is initially hired into a social service role to evaluate her/his motivation and methods. The supervisor and the employee would then be able to create a base line professional development plan. This tool could then be used at the employee's evaluations to determine the progress or deteriorations in different areas of her/his functioning on the job. The supervisor would have an opportunity and ability to create professional development plans that are specific to that employee and have a better understanding of where the employee needs support or guidance. The ability to create development plans with a supervisee based on her/his own current motivation and pathway could lead to a decrease of burnout and ultimately turnover.

Burnout and turnover are impediments for social workers, the profession and clients. There is a need to learn how to decrease the likelihood of burnout and the occurrence of turnover. While this study has opened the door for a new way of measuring hope, there is much work remaining to understand its impacts. There is much to be learned about hope, its predictors and possible positive impacts for the social work profession, social workers and social work clients.

List of References

References

Averill, J.R., Catlin, G., & Chon, K.K. (1990). *Rules of Hope*. New York, NY: Springer-Verlag.

Bandura, A. (1982). Self-efficacy mechanism in human agency. *American Psychologist*, 37, 122-147.

Bandura, A. (1997). *Self-Efficacy: The Exercise of Control*. New York, NY: Freeman.

Barker, R.L: (1999). The Social Work Dictionary (4th Edition). Baltimore, MD: NASW Press.

Beck, A.T., Kovacs, M. & Weissman, A. (1975). Hopelessness and suicidal behavior. *Journal of American Medical Association*, 234(11), 1146-1149.

Beck, C., Rawlins, R. & Williams, S. (1984). *Mental Health-Psychiatric Nursling: A Holistic Life Cycle Approach*. St. Louis, MO: C.V. Mosby.

Beck, A.T., Ward, C.H., Mendelson, MN., Mock, J., & Erbaugh, J. (1961). An inventory for measuring depression. *Archives of General Psychology*, 4, 53-63.

Ben-Bror, R. (1994). Employee turnover in community mental health organization: A developmental stages study. *Community Mental Health Journal*, 30(3), 243-257.

Bentler, P.M. (1980). Multivariate analysis with latent variables: Causal modeling. *Annual Review of Psychology*, 31, 419-456.

Blankertz, L. & Robinson, S. (1996). Who is the psychosocial rehabilitation worker? *Psychiatric Rehabilitation Journal,* 19 (4), 3-13.

Bloch, E. (1986). *The Principle of Hope*. Loudon, England: Basil Blackwell.

Braddock, D. & Mitchell, D. (1992). *Residential Services and Developmental Disabilities in the United States.* Edited by Michal J. Begab. Washington, D.C.: American Association on Mental Retardation.

Burger, J.M. & Cooper, H.M. (1979). The desirability of control. *Motivation and Emotion*, 3, 381-393.

Carmines, E.G. & McIver, J.P. (1981). Analyzing models with unobserved variables; Analysis of covariance structures. In G.W. Bohmstedt & E.F. Borgatta (Eds.). *Social Measurement.* Thousand Oaks, CA: Sage Publications.

Chung, M.L. (1990). *Phenomenological nursing study on the critically ill patient's feelings of hopelessness.* Unpublished master's thesis, Ewha Woman's University, Seoul, South Korea.

Coopersmith, S. (1967). *The Antecedents of Self-Esteem.* San Francisco: Freeman.

Cramer, K.M. & Dyrkacz, L. (1998). Differential prediction of mal-adjustment scores with the Snyder hope subscales. *Psychological Reports*, 83, 1035-1041.

Crowson, J.J., Frueh, C., & Snyder, C.R. (2001). Hostility and hope in combat0rlated posttraumatic stress disorder; A look back at combat as compared to today. *Cognitive Therapy and Research*, 25, 149-165.

Culver, N.F. (1992). *A Validation of the encouragement scale-teacher form.* Unpublished doctoral dissertation, University of Georgia, Athens.

Curry, L.A., Snyder, C.R., Cooke, D.L., Ruby, B.C., & Rehm. M. (1997). The role of hope in student-athlete academic and sport achievement. *Journal of Personality and Social Psychology,* 73, 1257-1267.

Drake, B. & Yadama, G.N. (1996). A structural equation model of burnout and job exit among child protective services workers. *Social Work Research*, 20(3), 179-187.

Elliott, J.A. (2005). *Interdisciplinary Perspectives on Hope*. Hauppage, NY: Nova Science Publishers, Inc.

Elliott, T.R., Witty, T.E., Herrick, S., & Hoffman, J.R. (1991). Negotiating reality after physical loss; hope, depression, and disability. *Journal of Personality and Social Psychology*, 61, 608-613.

Erikson, E.H. (1982). *The Life Cycle Completed: A Review*. New York, NY: Norton.

Fan, X. Thompson, B. & Wang, L. (1999). Effects of sample size, estimation method, and model specification on structural equation modeling fit indexes. *Structural Equation Modeling,* 6, 56-83.

Farran, K.A., Herth, J. & Popovich, M. (1995). *Hope and Hopelessness: Critical Clinical Constructs*. Thousand Oaks, CA: Sage Publications.

Fibel, B. & Hale, W.D. (1978). The generalized expectancy for success scale: A new measure. *Journal of Consulting and Clinical Psychology*, 46, 924-931.

Frankl, V.E. (1992). *Man's Search for Meaning: An Introduction to Logotherapy (4th Edition).* Boston, MA: Beacon Press.

Frankl, V.E. (1963). *Man's Search for Meaning*. New York, NY: Washington Square.

Fromm, E. (1968). *The Revolution of Hope: Toward a Humanized Technology*. New York, NY: Harper and Row.

Geurts, S., Schaufeli, W., De Jonge, J. (1998). Burnout and intention to leave among health-care professionals: A social psychological approach. *Journal of Social and Clinical Psychology,* 1793), 341-362.

Gibb, J. (1990). *The hope scale revisited: Exploration of construct validity and its influence on health.* Unpublished master's thesis, University of Kansas, Lawrence.

Gottschalk, L. (1974). A hope scale applicable to verbal samples. *Archives of General Psychiatry*, 30, 779-785.

Grossart-Marticek, R., Kanazire, D.T., Better, H. & Schmidt, P. (1983). Psychosomatic factors involved in the process of cancerogenesis. *Psychotherapeutic Psychosomatics,* 40, 191-210.

Harris, C.D. (1988). *Hope: Construct definitions and the development of an individual differences scale.* Unpublished doctoral dissertation, Department of Psychology, University of Kansas, Lawrence.

Heppner, P.P. & Peterson, C.H. (1982). The development and implications of a personal problem-solving inventory. *Journal of Counseling Psychology*, 29, 66-75.

Herth, K.A. (1991). Development and refinement of an instrument to measure hope. *Scholarly Inquiry for Nursing Practice*, 5(1), 39-51.

Hewitt, J.P. (1998). *The Myth of Self-Esteem: Finding Happiness and Solving Problems in America.* New York, NY: St. Martin's Press.

Holleran, S. & Snyder, C.R. (1990). *Discriminant and convergent validation of the Hope Scale.* Unpublished manuscript, University of Kansas, Lawrence.

Irving, L.M., Crenshaw, W., Snyder, C.R., Francis, P., & Gentry, G. (1990, May). Hope and its correlates in a psychiatric inpatient setting. Paper presented at the 62nd annual meeting of the Midwestern Psychological Association, Chicago.

Irving, L.M., Tefler, L., & Blake, D. (1997). Hope, coping and social support in combat-related post-traumatic stress disorder. *Journal of Traumatic Stress*, 10, 463-477.

Itzhaky, H. & Lipschitz-Elhawi, R. (2004). Hope as a strategy in supervising social workers of terminally ill patients. *Health and Social Work*, 29(1), 46-54.

Jackson, W.T., Taylor, R.E., Palmatier, A.D., Elliott, T.R., & Elliott, J.L. (1998). Negotiating the reality of visual impairment: Hope, coping, and functional ability. *Journal of Clinical Psychology in Medical Settings*, 5, 173-185.

Jayaratne, S. & Chess, W.A. (1984). Job satisfaction, burnout, and turnover: A national study. *Social Work*, 24, 448-453.

Joreskog & Sorbom. (1993). Structural Equation Modeling with the Simplis Command Language. Hillsdale, NJ: Lea Publishing.

Kline, R.B. (1998). *Principles and Practice of Structural Equation modeling*. New York, NY: Guilford Press.

Knapp, M., Harissis, K., Missiakoulos, S. (1981). Who leaves social work? *The British Journal of Social Work*, 11, 421-444.

Magaletta, P.R. & Oliver, J.M. (1999). The hope construct, will and ways: Their relative relations with self-efficacy, optimism, and general well-being. *Journal of Clinical Psychology,* 55, 539-551.

Miller, J.F. & Powers, M. (19880. Development of an instrument to measure hope. *Nursing Research*, 37(1), 6-10.

Mor-Barak, M.E., Nissly, J.A., Levin, A. (2001). Antecedents to retention and turnover among child welfare, social work, and other human service employees: What can

we learn from past research" A review and metanalysis. *Social Services Review*, 625-660.

NASW. (1999). *Code of Ethics*. Baltimore, MD: NASW Press.

Nowotny, M. (1989). Assessment of hope in patients with cancer; Development of an instrument. *Oncology Nursing Forum*, 16(1), 75-79.

Onwuegbuzie, A.J. & Snyder, C.R. (2000). Relations between hope and graduate students' studying and test-taking strategies. *Psychological Reports*, 86 803-806.

Owen, D. (1989). Nurses' perspectives on the meaning of hope in patients with cancer: A qualitative study. *Oncology Nursing Forum*, 16(1), 75-79.

Pearlman, L.A., McCann, L., & Johnson, G. (1990). *The McPearl Belief Scale: A new measure of cognitive schemas*. Unpublished manuscript, Traumatic Stress Institute, South Windsor, CT.

Pines, A. & Kafry, D. (1978). Occupational tedium in the social services. *Social Work*, 23, 499-507.

Richter, C.P. (1957). On the phenomenon of sudden death in animals and man. *Psychosomatic Medicine*, 19(3), 191-198.

Range, L.M. & Penton, S.R. (1994). Hope, hopelessness, and suicidality in college students. *Psychological Reports*, 75, 456-458.

Rosenberg, M. (1965). *Society and Adolescent Self-Image*. Princeton, NJ: Princeton University Press.

Scheier, M.F., & Carver, C.S. (1985). Optimism, coping, and health: Assessment and implications of generalized outcome expectancies on health. *Health Psychology*, 4, 219-247.

Scheier, M.F., & Carver, C.S. (1987). Dispositional optimism and physical well-being: The influence of generalized outcome expectancies. *Journal of Personality,* 55, 169-210.

Schmale, A.H. (1964). A genetic view of affects: With specific reference to the genesis of helplessness and hopelessness. *Psychoanalytic Study of the Child*, 19, 287-310.

Seaton, K. & & Snyder, C.R. (2001). *Hope and remaining in a treatment program for drug abuse.* Unpublished manuscript, Department of Psychology, University of Kansas, Lawrence.

Seligman, M.E.P., Reivich, K., Jaycox, L., & Gilham, J. (1995). *The Optimistic Child.* New York: Houghton Mifflin.

Snyder, C.R. (2002). Hope theory: rainbows in the mind. *Psychological Inquiry*, 13(4), 249-275.

Snyder, C.R. (Ed.) (2000a). *Handbook of Hope: Theory, Measures, and Applications.* San Diego, CA: Academic Press.

Snyder, C.R. (2000b). The past and future of hope. *Journal of Social and Clinical Psychology,* 19, 11-28.

Snyder, C.R. (1998). Hope. In H.S. Friedman (Ed.), *Encyclopedia of Mental Health* (pp.421-431). San Diego, CA: Academic.

Snyder, C.R. (1994a). *The Psychology of hope: You Can Get There From Here*. New York, NY: Free Press.

Snyder, C.R. (1994b). Hope, goal blocking thoughts, and test-related anxieties. *Psychological Reports,* 84, 206-206.

Snyder, C.R. (1989). Reality negotiation: From excuses to hope and beyond. Journal of *Social and Clinical Psychology*, 8, 130-157.

Snyder, C.R., Harris, C. Anderson, J.R., Holleran, S.A., Irving, L.M. Sigmon, S.T., Yoshinobu, L., Gibb, J., Langelle, C. & Harney, P. (1991). The will and the ways: Development and validation of an individual differences measure of hope. *Journal of Personality and Social Psychology*, 60, 570-585.

Snyder, C.R., Irving, L., Anderson, J.R. (1991). Hope and health: measuring the wills and the ways. In C.R. Snyder & D.R. Forsyth (Eds.), *Handbook of Social and Clinical Psychology: The Health Perspective* (p. 285-305). Elmsford, NY: Pergamon Press.

Snyder, C.R., Sympson, S.C., Ybasco, F.C., Borders, T.F., Babyak, M.A. & Higgins, R.L. (1996). Development and validation of the State Hope Scale. *Journal of Personality and Social Psychology*, 2, 321-335.

Snyder, C.R., Thompson, L.Y., Shorey, H.S. & Heinze, L. (2003). The hopeful ones; A psychological inquiry into the positive mind and heart. In R. Jacoby &G. Kienan (eds.), *Between Hope and Stress: From a Disease Centered to a Health-Centered Perspective.* New York, NY: Greenwood.

Soderfeldt, M, Soderfeldt, B. and Warg, L. (1995). Burnout in social work. *Social Work,* 40(5), 639-646.

Sowers-Hoag, K.M. & Thyer, B. A. (1987). Burnout among social work professional : A behavioral approach to causal and interventive knowledge. *Journal of Sociology and Social Welfare,* 14(3), 105-118.

Staudt, M., Howard, M.O. & Drake, B. (2001). The operationalization, implementation, and effectiveness of the strengths perspective: A review of empirical studies. *Journal of Social Service Review*, 27(3), 1-21.

Stanton, A.L., Dannof-Burg, S., Cameron, C., Bishop, M., Collins, C.A., Kirk, S.B., Sworowski, L.A., & Twillman, R. (2000). Emotionally expressive coping predicts psychological and physical adjustment to breast cancer. *Journal of Consulting and Clinical Psychology*, 68, 875-882.

Stotland, E. (1969). *The Psychology of Hope*. San Francisco, CA: Jossey-Bass.

Sumerlin, J. (1997). Self-actualization and hope. *Journal of Social Behavior and Personality,* 12, 1101-1110.

Todd, C.M. & Deery- Schmitt, D.M. (1996). Factors affecting turnover among family child care providers: A longitudinal study. *Early Childhood Research Quarterly*, 11, 351-376.

Walsh, J.A. (1987). Burnout and values in the social services profession. *Social Casework: Journal of Contemporary Social Work*, May, 279-283.

Weick, A., Rapp, C., Sullivan, W.P., Kisthardt, W. (1989). A strengths perspective for social work practice. *Social Work*, July, 350-354.

Westburg, N. (in press). Hope in older women: the importance of past and current relationship. *Journal of Social and Clinical Psychology*, 20(3), 354-365.

Zimmerman, M.A. (1990). Toward a theory of learned hopefulness; A structural model analysis of participation and empowerment. *Journal of Research in Personality,* 24, 71-86.

Appendices

Appendix A

The Trait Hope Scale

The Trait Hope Scale

Directions: Read each item carefully. Using the scale shown below, please select the number that best describes YOU and put that number in the blank provided.

1. = Definitely False
2. = Mostly False
3. = Somewhat False
4. = Slightly False
5. = Somewhat True
6. = Somewhat True
7. = Mostly True
8. = Definitely True

1. _____I can think of many ways to get out of a jam.
2. _____I energetically pursue my goals.
3. _____I feel tired most of the time.
4. _____There are lots of ways around any problem.
5. _____I am easily downed in an argument.
6. _____I can think of many ways to get the things in life that are important to me.
7. _____I worry about my health.
8. _____Even when others get discouraged, I know I can find a way to solve the problem.
9. _____My past experiences have prepared me well for my future.
10. _____I've been pretty successful in life.
11. _____I usually find myself worrying about something.
12. _____I meet he goals that I set for myself.

*Note: W*hen administering the scale, it is called The Future Scale. The agency subscale score is derived by summing items 2,9,10, and 12; the pathway subscale score is derived by adding items 1, 4, 6, and 8. The total Hope Scale score is derived by summing the four agency and the four pathway items. From "The Will and the Ways: Development and Validation of an Individual Difference Measure of Hope," by Snyder, Harris, et al, 1991, journal of Personality and social Psychology, 60, p.585. Copyright 1991 by the American psychological Association and the senior author. Reprinted with permission.

Appendix B

Research Survey

2006 Hope and Social Services Providers

By completing this survey, you understand that participation is voluntary, anonymous, and serves as your informed consent

****

I. Field of Practice

1. Please *circle* all fields of practice options in which your agency is involved.

A. Aging/Gerontological Social Work
B. Alcohol, Drug or Substance Abuse
C. Community Outreach, Planning
D. Corrections/ Criminal Justice
E. Family Services
F. Physical Health
G. Homeless Services
H. Outpatient Mental Health
I. Mental Retardation
J. Public Child Welfare
K. Residential/ Inpatient
L. School Social Work
M. Forensic Social Work
N. Crisis Services
O. Other_____

2. *Write* the field of practice letter from above in which you are primarily employed_____

3. In what role do you work? *(Circle one)*

1. Case Management
2. Community Development
3. Research/Program Evaluation
4. Fund Raising
5. Management/ Supervision
6. Community Organizing
7. Therapist
8. Direct Care/ Front Line
9.Crisis Services
10. Other:_____

4. What is the title of your position? _____

****

II. Intent to Stay in Social Services

Read each of the following statements and choose the number that best describes you and put that number in the blank at the beginning of the statement.

1. Strongly Disagree 2. Disagree 3. Neutral 4. Agree 5. Strongly Agree

1. _____In the next few months I intend to leave the social services field
2. _____In the next few years I intend to leave the social services field
3. _____I occasionally think about leaving the social services field
4. _____I'd like to work in the social services field until I reach retirement age

****

III. Hope

Read each of the following statements. Choose the number that best describes you. Put that number in the blank at the beginning of the statement.

1-Definitely False
2-Mostly False
3-Somewhat False
4-Slightly False
5-Slightly True
6-Somewhat True
7-Mostly True
8-Definitely True

1. _____I can think of many ways to get out of a jam
2. _____I energetically pursue my goals
3. _____I feel tired most of the time
4. _____There are lots of ways around any problem
5. _____I am easily downed in an argument
6. _____I can think of many ways to get the things in life that are most important to me
7. _____I worry about my health
8. _____Even when others get discouraged, I know I can find a way to solve the problem
9. _____My past experiences have prepared me well for my future
10. _____I've been pretty successful in life
11. _____I usually find myself worrying about something
12. _____I meet the goals that I set for myself

****

IV. Individual Demographics

*Please tell me a little information about you. Remember that all answers are anonymous. **NOBODY** can match your responses to your identity.*

1. What is your gross salary per year for your job in social services? $_____

2. How are you employed? *(Circle one)* Full-time Part-time

3. How many hours per week do you work on average? _____

4. Did you have experience in social service work before you began your current employment? *(Circle one)* Yes No

   4a. If yes, *how many years of experience*_____
   4b. How long have you worked at your current agency? _____

5. What is your highest level of education? *(Circle one)*

   1. High School/GED
   2. Associates degree: Specify_____
   3. Bachelors degree: Specify_____
   4. Master's degree: Specify_____
   5. Ph.D./ Medical degree: Specify_____

6. What is your gender? *(Circle one)* Male Female

7. What race/ethnicity do you most recognize with? *(Circle one)*

   1. Caucasian
   2. Asian American
   3. Native American
   4. Hispanic
   5. African American
   6. Island Pacificer
   7. Middle Easterner
   8. Other:_____

8. What year were you born? _____

9. Are you in a relationship with someone you feel supports you in your work? *(Circle one)* Yes No

10. Do you have children? *(Circle one)* YesNo

    10a. If yes, *do they live with you?* (Circle one) Yes No
    10b. What are their ages? _____ _____ _____ _____ _____ _____

****

Thank you for taking the time to complete this survey.

Appendix C

Approved IRB

Original Date: 02-15-06

Date Revised: 04-10-06

FORM A

Certification for Exemption from IRB Review for Research Involving Human Subjects

---

A.	**INVESTIGATOR:**	Andrea K. McCarter, CMSW Karen M. Sowers, Ph.D, Student Advisor
B.	**DEPARTMENT & SCHOOL:**	College of Social Work
C.	**TELEPHONE #:**	865-803-9336
D.	**FAX#:**	865-560-2580
E.	**ADDRESS:**	University of Tennessee College of Social Work 219 Henson Hall Knoxville, TN 37918
F.	**EMAIL:**	akmccarter@comcast.net
G.	**PROPOSAL TITLE:**	An Assessment of a Hope Scale with Social Service Providers
H.	**FUNDING SOURCE:**	Not Applicable
I.	**STARTING DATE:**	February 28, 2006
J.	**ESTIMATED COMPLETION:**	April 1, 2006
K.	**STUDY SITES(S):**	Tennessee offices of Youth Villages (Chattanooga, Clarksville, Colombia, Cookeville, Dickson, Dyersburg, Jackson, Johnson City, Knoxville, Morristown, Memphis, Nashville, Paris)

I. RESEARCH PROJECT

1. Objective(s) of Project (Use additional page, if needed.):
The purpose of the current study to further examine the concept "hope" as defined in the psychology field. The proposed research study will consider hope in a population that has not been considered in the past. The current instruments used to measure hope will be tested in a measurement model to determine its generalizability with employees in the social services field.

2. Subjects (Use additional page, if needed.):
The proposed researched will be conducted using a purposive sample. Subjects will be employees recruited from Youth Villages, a private, not-for-profit social service organization in Tennessee. All adult subjects within the program of interest, Intercept, will be offered the opportunity to participate in the research study regardless of race, ethnicity, age and gender.

3. Methods or Procedures (Use additional page, if needed.)

Data will be gathered from each participating employee using a survey instrument created by the researcher (see attachment). The survey consists of a previously created scale and demographic questions. The survey is designed to be short and requires a maximum of 15 minutes to complete. Supervisors within Youth Villages will be provided instructions for facilitating the survey process. Supervisors will be asked to designate a counselor to provide instructions (from a script provided by the researcher- see attachment), distribute and collect the surveys and return them to the researcher. Subjects will be given a full description of the purpose of the study, information for human subjects consent, and researcher's contact information for their personal records (see attachment). Completion of the survey will serve as the informed consent of the participant in order to maintain the anonymity of the research process. Upon completion of the survey, subjects will be asked to place the survey in an individual envelope and seal the envelope. Subjects will be given the option to not complete the survey, but will be asked to seal their survey in an envelope whether it is completed or not and place it in the mailing envelope provided. The mailing envelope will be sealed and mailed to the researcher by the designated counselor.

L. CATEGORY(s) FOR EXEMPT RESEARCH PER 45 CFR 46 (See instructions for categories.):

45 CFR 46.101 (b) (2) Research involving the use of educational tests (cognitive, diagnostic, aptitude, achievement), survey procedures, interview procedures or observation of public behavior, **unless**: (i) information obtained is recorded in such a manner that human subjects can be identified, directly or through identifiers linked to the subjects; **and** (ii) any disclosure of the human subjects' responses outside the research could reasonably place the subjects at risk of criminal or civil liability or be damaging to the subjects' financial standing, employability, or reputation.

M. CERTIFICATION: The research described herein is in compliance with 45 CFR 46.101(b) and presents subjects with no more than minimal risk as defined by applicable regulations.

The proposed research will be conducted using survey procedures. No person will be able to link the information recorded in the survey with the person who provided the responses. There will be no identifiers, names or identification numbers, on the surveys to serve as linkages between the responses and respondent; therefore there are minimal risks to any human subjects who participate.

A case manager, who is a peer to the subjects, will distribute and collect the surveys to minimize the potential of subjects feeling coerced into completing the survey.

The survey will contain no identification numbers and people will be instructed to not put their name on the survey to eliminate the risk of a respondent being linked to her/his survey responses.

The individual respondent will seal her/his survey in an envelope whether it is completed or not. The surveys will be sealed in a mailing envelope and mailed by the designated counselor. The supervisor will not have access to the surveys. If opened by a person other than the researcher, the responses cannot be linked to the respondent.

Principal Investigator: Andrea K. McCarter _____ _____
Name Signature Date

Student Advisor: Karen M. Sowers _____ _____
Name Signature Date

Department Review Committee Chair: Marlys Staudt _____ _____
Name Signature Date

APPROVED:
Department Head: Karen M. Sowers _____ _____
Name Signature Date

COPY OF THIS COMPLETED FORM MUST BE SENT TO COMPLIANCE OFFICE IMMEDIATELY UPON COMPLETION.

Rev. 01/2005

Appendix D

Informed Consent Letter

An Assessment of the Trait Hope Scale with Social Service Providers

You are invited to participate in a research project designed to learn more about a scale created to measure perceived levels of hope. Your participation in this study is voluntary, you may decline to participate without penalty. Return of the completed survey (questionnaire) constitutes your consent to participate.

The survey that you are about to receive and complete (if you choose) is part of a research study. Andrea K. McCarter, CMSW, will be collecting, entering and analyzing the data for the purpose of completing a doctoral dissertation.

The information to be analyzed will be collected from you in the form of a survey instrument. A survey will be provided to you by your group leader and you will be given time to respond to the questions. You will be allowed time to complete the survey with your supervisor not present. You will also receive an envelope that is stamped and addressed in which to return the survey to the researcher. The questions are either fill-in-the blank or in scale form. Some of the questions are related to how you see yourself in your job, how you see your future in the social services field and information about your personal characteristics. This survey should not take more than 15 minutes to complete. You will be asked to place your survey, whether you complete it or not, into the self-addressed stamped envelope and place it in the mail for return to the researcher.

There are no known risks or benefits to you directly for participating in the survey due to the survey being voluntary and anonymous. This research will have a benefit to the social work knowledge base in providing information about a new theory and method of measuring hope.

Your responses are voluntary and anonymous meaning that *nobody* will be able to match your answers to you. Only you will know if you complete the survey before you put it in the envelope. The surveys will not be taken from the envelope until they are received by the researcher. There will be no identifying marks (names or numbers) on the surveys in order to prevent the researcher from learning your identity. Should the results be published in any manner, there will be no identifying factors allowing someone to connect you to you answers.

If you have questions at any time about the study or the procedures, you may contact the researcher, Andrea K. McCarter, at 9111 E. Cross Park Dr. Ste. E-475, Knoxville, TN 37923, or 865-803-9336. If you have questions about your rights as a participant, contact the Office of Research Compliance Officer at (865) 974-3466.

Appendix E

Letter to Supervisors

Date

Dear *Supervisor,*

Thank you so much for taking the time out of your team meeting to help me accomplish my dissertation research. I just wanted to take a few minutes to give you a little information about my research in case you or any of your team members would like to know more about the topic.

I have been in the social work field in a variety of roles for 10 years. I have worked as a counselor and a residential director. I became interested in why people in the social services stay in their jobs while I was a residential supervisor. There is a lot of research conducted about burnout and turnover in the social services field, but little information has been provided about why people stay in the field. There is a theory in the field of psychology called Hope Theory, which considers an individual's personal characteristics to determine whether a person will succeed. This theory has been tested and shown to be true in academics, athletics and with psychiatric patients. It has never been tested with social service providers or employees in any work place. My hypothesis is that higher levels of hope indicate higher levels of success in social service work and longer longevity in the field. If my hypothesis is proven to be true, I would like to create practice models for supervisors to use in training, supervising and supporting their employees.

The attached guidelines are a script that you may read when distributing the survey to your team. For research validity reasons, it is very important that each team be presented with the same information. Should questions from your team arise, I am available for consultation about the survey at any time. If you should have questions about the guidelines or the survey before you collect the surveys or if one of your team members has questions during the survey please feel free to call me at 865-803-9336. This is my cell phone and it is always on.

Sincerely,

Andrea K. McCarter, CMSW
Doctoral Candidate- UT College of Social Work

Appendix F

Survey Distribution Instructions

Survey Distribution Instructions

1. Because I want counselors to be assured that their responses are anonymous you will be asked to leave the room once the instructions have been given and not have access the surveys afterwards. If you choose to complete a survey, please complete it and mail it outside of the meeting.

2. Introduce the survey briefly

"We are going to take a few minutes of our staff meeting today to participate in a research project being conducted by a Youth Villages employee. Andrea McCarter is working on her dissertation in social work. She is interested in learning about social service providers' experiences."

"You do not have to complete this survey, however this research is important for the social services field in learning why people remain in the field and others leave. The results will be used to better understand and create models of supervision in the future, to decrease burnout and turnover rates. Nobody in the agency or the researcher will know if you complete the survey or not. This survey should take no longer than 15 minutes to complete."

3. Give each person a copy of the informed consent and allow her/him time to read the information about the research.

"The informed consent provides you with information about the researcher and about your own anonymity."

4. Provide a copy of the survey and a self addressed stamped envelope to each member of the group.

"You do not have to complete this survey. If you choose to respond to the survey, it is very valuable that you respond to each question as honestly as possible, but should you feel uncomfortable about a question, please skip it. For your own anonymity, please place the survey in your individual envelope whether you complete it or not. This will prevent your colleagues from knowing if you did not complete it. Once you have sealed your individual envelope please drop it in a mail box to be returned to Ms. McCarter.

5. Leave the room until the surveys are all case managers have had time to complete their survey and seal it.

Vita

Andrea K. McCarter has attended the University of Tennessee for three degrees. She obtained her Bachelor of Science in Social Work (BSSW) in 1996. She worked for four years in the social work field before returning to school to obtain a Master of Science in Social Work (MSSW) in 2002. Following the MSSW, she began working on her Doctorate of Philosophy in Social Work completed (2006). She has worked in the social work field with children, adolescents and families for 11 years in Knoxville, TN. She has worked in residential facilities, as a program director and a crisis counselor.

4502 4346 10
07/20/06 MAB