A STUDY OF ILLUMINATION

by

Jess E. Schumaker

and

Howard B. Jones

A THESIS SUBMITTED FOR THE DEGREE OF

BACHELOR OF SCIENCE

ELECTRICAL ENGINEERING COURSE

The University of Tennessee

1933

TABLE OF CONTENTS

	Page
1. Introduction	1
2. Illumination Terms	3
3. A Study of Illumination	7
Direct System	
Semi-Indirect System	
Indirect System	
4. State of Purpose	11
5. Causes For Decrease of Efficiency	
Dirty Reflectors and Lamps	12
Depreciation of Surroundings	13
Depreciation of Lamps	14
Undervoltage Burning of Lamps	15
Proper Lamp For Reflector	16
6. Discussion on Reflectors	17
7. Method of Performance	21
8. Suggestions For Increase in Efficiency	24
Library Table Lamp	26
Direct Units	28
Ceilings and Walls	33
Economics of Painting	33
9. Conclusions	35
10. Bibliography	38
11. Approval	39

INTRODUCTION

In this brief study of the methods and systems of illumination, the writers have attempted to analyze the methods that have been successful in other fields, and through this analysis arrive at some definite method of procedure that may be applicable in library illumination. The efficiency of the illumination in the main reading room is very low, and various tests were made under different lighting conditions, and the conclusions are based on the data and tests obtained through experimentation.

The number of foot-candles recommended as good practice for library reading rooms is about 12, with a minimum of 8. At the time of installation, a test of the intensity of the reading room was made, and was found to be around 8 foot-candles. Various tests were made approximately two years from the date of installation, and the results showed that the efficiency had decreased; the intensity of the illumination being as low as 2.6 foot-candles.

The purpose of this thesis is to attempt to find the source of the drop in the efficiency of the illumination and bring about some method of improvement.

The writers wish to express their sincere thanks to those who have offered their assistance. Especially are we indebted to the General Electric Company, New York, and the National Lamp Works of Cleveland, Ohio, for their assistance in giving information concerning illumination and lighting systems for libraries. Among others that assisted, we wish to mention Prof. J. G. Tarboux and Mr. J. H. Rutherford of the Tennessee Public Service Company who assisted in the organization and compilation of the materials and information used in this thesis.

This thesis is a study of the illumination of the Main Reading Room of the library of the University of Tennessee. This room has the indirect system of illumination, which when installed seemed to give the proper illumination of 8 foot-candles at table level. About one year later, the students complained of the improper illumination, saying that a short period of studying resulted in eye strain. A partial check was made on the illumination of the reading room at this time, and the results were that the illumination level had decreased considerably, from the practical requirements for library reading rooms. Differences of opinion were expressed at this time for the cause of the defficiency, the major opinion being that dirty reflectors and deteriorated lamps. The lamps were changed and the reflectors were thoroughly cleaned, which gave a slight increase in the illumination. After this, the reflectors were cleaned approximately once each week.

Approximately two years from the date of installation, the students complained of eye strain from intense studying in the reading room, the causes of the drop in illumination being hard to ascertain as before. This thesis is the results of various tests made on the intensity of the light of the reading room.

ILLUMINATION TERMS

ABSORPTION - The loss which results when light strikes any object or traverses any medium.

ANGLE OF REFLECTION - The angle with respect to the normal at which a ray of light leaves a surface after it has been reflected.

APPARENT CANDLE-POWER - It is customary to designate the light intensity of an illuminant in apparent candle-power measured as some designated distance in cases where, because of the relatively large area of the light source, or the use of certain lenses or reflectors, the Law of Inverse Squares does not apply and where, as a consequence, the intensity of light cannot be accurately stated in candle power.

BRIGHTNESS - Any object emitting or reflecting light is said to be brightened, because of its brightness, is visible.

CANDLE-POWER - Candle-power is a measure of luminous intensity a term used to express the intensity of light emanating in any given direction from a light source. It is anallagous to steam pressure in steam engineering and voltage or electromotive force in electrical engineering.

COVE LIGHTING - A system of indirect lighting in which lamps and reflectors are concealed by a molding or other suitable structural element around the edge of the area to be illuminated. The light is directed to the ceiling from which it is diffused.

DIFFUSION - Light is said to be diffused when by process of reflection and refraction it reaches the eye from many directions rather than from one direction of the source.

DIRECT LIGHTING UNIT - A lighting unit which emits the major portion of its flux in such a manner that it reaches the area to be illuminated without redirection or reflection.

EFFICIENCY OF LAMPS - Lamp efficiency is expressed in terms of the ratio of lumens output to power input. The rated efficiency of Mazda lamps is now expressed in lumens per watt.

EFFECTIVE LUMENS - The total number of lumens falling on the working plane. This value may be obtained by multiplying the area of the working plane by the average illumination in foot-candles.

FILAMENT - A conductively continuous light giving element which becomes incandescent due to its resistance to passage of current through it.

FOOT-CANDLE - The unit of intensity of illumination. It is equal to the illumination falling upon a surface one foot distant from a one candle-power source. If a uniform point source of one candle-power is placed at the center of a sphere of one foot radius, every point on the inner surface of the sphere receives an illumination of one foot-candle. This is apparent from the fact that the area of this unit sphere 12.57 square feet, and a uniform point source of one candle-power emits 12.57 lumens. Hence, one lumen per square foot gives an average intensity of one foot-candle.

GLARE - Glare is a condition of bright light sources or illuminated surfaces which results in ocular discomfort or interference with vision.

ILLUMINATION - The term illumination is often used to indicate the luminous radiation falling upon a surface in contradistinction to light as luminous radiation emitted from a light

source. The intensity of illumination is measured in foot-candles and flux of illumination in lumens.

INDIRECT LIGHTING UNIT - A lighting unit which emits practically all of the light flux upward to the ceiling for diffuse reflection over the room area. The ceiling or its equivalent then becomes a secondary source of low brightness and large area, which provides an even illumination of diffuse nature and free from glare.

INTENSITY - A measure of luminous radiation in any direction without reference to area. Intensity of light is measured in candle-power and the intensity of illumination in foot-candles.

LAW OF INVERSE SQUARES - Unless modified by some interfering agency, light rays travel in straight radial lines in all directions from the source. The law of inverse squares follows directly from the fact: The intensity of illumination received by a surface from a light source, is directly proportional to the candle power, and is inversely proportional to the square of the distance. For instance, at one foot from a lamp giving 16 candle-power the intensity would be 16 foot-candles; at 2 feet, 4 foot-candles, and at 4 feet, one foot-candle.

LUMEN - The lumen is the unit of flux of light or illumination. The flux required to light a given surface is proportional to the illumination and the area of the surface. One lumen will light a surface of one square foot to an average of one foot-candle intensity.

LUMENS PER WATT - The efficiency of an incandescent lamp may also be expressed as lumens per watt. Lumens per watt equals lumens divided by watts. Effective lumens per watt is a measure

of the efficiency of a lighting installation and equals the total effective lumens divided by the total watts input of all units, equals mean foot-candles divided by watts per square foot.

REFLECTOR - A reflector redirects the light from the lamp so that it may be utilized most efficiently and conceals the lamp so that the eye is protected from the intense brilliance of the filament.

TRANSMISSION - Transmission may be defined as the passage of light through an object or medium.

VISUAL ACUITY - The ability of the eye to distinguish fine detail. Visual acuity, for example, is the measure of ability to read type.

WORKING PLANE - The working plane or plane of refrence is the plane on which the work is performed and which, therefore, must be adequately and satisfactorily illuminated.

A STUDY OF ILLUMINATION

In our schools, colleges and public libraries, wherever reading facilities are provided, the comfort of the eye should have every thoughtful attention. More than ever before in the history of building do the architects and custodians of libraries recognize the value of their trust in respect to conserving priceless eyesight. Whatever means are available for securing the greatest possible comfort for the eye, this means should be specified.

Since poor lighting and glare are directly responsible for eye strain, and result in nervous disorders, several states have provided rigid school lighting codes. These insist that the light sources be concealed, and that proper equipment be designed and installed for each particular lighting requirement.

Libraries may be divided into two distinct classes. The monumental building of the large city, where the rooms are spacious, ceilings high, corridors handsomely finished, and where the element of decoration plays a large part. Reading rooms in this class of building are generally separate from the stack room. The other class is the branch, public school, or town library.

It is quiet common practice to install decorative luminaires in the high-ceiling reading rooms of the first-mentioned class of buildings. These supply a moderate intensity of general illumination necessary for supervision, and prevent severe contrasts of brightness, but are seldom designed to supply enough light for continual reading.

There are three principal methods for the illumination of interiors in general, and are roughly classed as direct lighting, semi-indirect lighting and indirect illumination.

In the direct lighting system the unit, which usually consists of a lamp and shade or reflector, emits the major portion of its light downward, in such a manner that it falls upon the area to be illuminated without reflection.

Semi-indirect lighting is a rather indefinite term, but is usually considered as a system in which the illuminating mechanism directs the light flux towards the ceiling or upper side walls, from which it is reflected to the working plane, while a considerable portion of the light is transmitted through the translucent body of the unit.

In the indirect lighting system practically all of the light is directed upward to the ceiling and again diffusely reflected over the entire room area. The ceiling in this case becomes the secondary light source. It is large in area and of low brightness, so that the system is particularly favorable for providing even illumination of a diffused daylight quality and free from glare, since no bright area of source is visible.

INDIRECT ILLUMINATION

Diffused, natural lighting has been and is the ideal form of illumination. Much of our daylight in offices is obtained indirectly from sunlight reflected from clouds, from the walls of buildings, trees, hills, and other things in nature. Very seldom do we work under the direct sunlight.

A recent bulletin of one of the large lamp manufacturers says: "When the sky is overcast with clouds we might move our desks

outdoors and work under ideal lighting conditions, because shadows and glare are practically eliminated by the diffused light coming down from the whole sky." This latter, then, is a criterion for good quality of light for office work and interior work.

Artificial light indoors offers the same range of quality as daylight outdoors. Harsh shadows and glare result from insufficient diffusion of light, while illumination of excellent quality for office work is obtained when the whole ceiling becomes the effective source of light, just as the whole sky becomes the effective source of light outdoors on a cloudy day.

Indirect lighting in a commercial sense is usually considered to be the system of illumination in which the primary source of light is entirely concealed from view, and does not shed its rays directly upon the areas to be illuminated, such as table tops and drafting tables. Effective lighting comes from the comparatively broad expanse of the ceiling. Indirect lighting is frequently compared to diffused daylight because of its qualities of diffusion and the softness of shadows, and because of the ability of the eye under this type of illumination to function with ease and with minimum fatigue.

The principle underlying the diffused quality of indirect illumination is the method by which the light is reflected from the ceiling and walls of the room. The light beam strikes the ceiling and is broken up into rays and is reflected in a number of directions. Some of the rays go directly to the walls, where they are further broken up and reflected.

Thus it is that the illumination that reaches the table tops is the combined effect of the multitude of reflected rays

coming from many directions, each ray softening the shadows that might be cast by the others, and resulting in the diffused daylight quality so characteristic of the indirect lighting system. Indirect lighting is not shadowless, as is sometimes supposed. The shadows are much softened, but not eliminated. Furthermore, indirect lighting has a directional effect, contrary to the popular notion.

One of the first reasons for the desirability of the system of indirect lighting is the necessity for the shielding of the modern high powered light sources. The harsh candle-power of the lamp must be changed in distribution, in brilliancy, and sometimes in color, for our practical uses. We know that bright contrasts in lighting make seeing difficult. The seeing ability, or "vision acuity," is remarkably high for this system. The ability of the eye to distinguish detail is not wholly a matter of the intensity of the light in foot-candles, but depends upon the capacity of the eye to adapt itself to the lighting conditions. Sharp contrasts are avoided and glare is not present with any intensity of illumination by this system.

An effective light source is an essential for indirect lighting. This is supplied in a very satisfactory manner by the gas filled tungsten lamp in various sizes from 50 to 1500 watts. Of equal importance is the reflecting elements that are used in connection with the lamp. These should be of high quality, efficient, and constructed of such material as will make them capable of being fashioned or shaped to give the desired distribution of light, whether symmetrical or non-symmetrical.

The amount of light delivered on the table tops by the indirect lighting system will depend upon a number of conditions.

About 30 percent of the light generated by the lamp reaches the tables as useful illumination. In rooms where the decorations are kept in good condition by refinishing each year and by using light colors, the "efficiency of utilization," is much higher than the figure quoted.

Indirect illumination has many and very definite qualities to recommend it. It is restful because of the lack of harshness. It is frequently described as "refined" because it lends a harmonious atmosphere of good taste. It is efficient when judged by the proper standards. It has been found to be productive because of its concious heightening effect upon the working plane, or working force.

STATE OF PURPOSE

The object of this thesis was to determine to the best of our ability, the causes that arise in the decrease of the illumination in indirect lighting systems, specifically however, in the main reading room of the library of the University of Tennessee.

CAUSES FOR DECREASE OF EFFICIENCY OF ILLUMINATION

There are several causes for this decrease of efficiency of illumination of the reading room. The effect of the collection of dirt on the walls and ceiling, dirty reflectors and lamps are two of the most important causes for this decrease. Below are six principal causes of lighting depreciation. They are as follows:

1. Dirty reflectors and lamps.
2. Darkened walls and ceilings.
3. Lamps of poor quality.
4. Empty sockets and unobserved burnouts.
5. Undervoltage burning of lamps.
6. Improper combination of lamp and reflector.

DIRTY REFLECTORS AND LAMPS

The effect of dirty reflectors and lamps will be discussed first. All lamps and reflectors should be regularly washed and cleaned. The period between cleanings will vary with the locality and type of equipment. Obviously, a steel, direct lighting reflector will not depreciate as rapidly as an indirect unit. The inverted unit offers a good opportunity for dust to gather, and a thin layer of dust soon settles on the entire reflecting surface, as well as on the lamp, which will reduce the light output appreciably in a very short time. Not only is this true, but the very arrangement of the parts makes the accumulation greater.

From tests made on the various types of lighting systems, the approximate loss in percent of initial illumination on the working plane for the total indirect system, was found to be 20 percent for 4 weeks, 29 percent for 8 weeks, 37 percent for 12

weeks, 44 percent for 16 weeks, and 50 percent for a period of 20 weeks. These figures are typical of average conditions.

With the total indirect system, the dirt gathers on the inner surfaces and is not noticed until conditions become so aggrevated that the illumination drops far below that intensity for which it was designed. Thus, a careful maintenance of any indirect system is extremely important.

DEPRECIATION OF SURROUNDINGS

No matter how carefully a lighting system may be designed as to type and size of lamps, type and make of reflector, spacing, height, etc., if the surroundings are not adapted to reflecting such light as strikes them, then an inefficient system may result. The proper painting of walls and ceilings is, therefore, of great importance.

The ceiling and wall surfaces in a room are secondary sources of light receiving and reflecting light from the lamps--and merely increasing the reflection coefficient of the ceiling a slight amount may greatly increase the effective illumination.

No matter how carefully painted a room may be, soot, smoke and other agencies soon darken the surfaces of the room and cause it to lose considerable of its reflecting power.

A check was made on the color of the walls of the reading room, and the walls were found to be an ivory tan, with a reflection factor of only 67 percent. They are much darker now than at the time of construction, due to the smoke and soot, and dirt that have settled on them. These walls are the type that have a roughened surface, and are adapted to collecting the dust more easily.

A new installation should give a higher intensity than the desired value. This is because of the fact that everything is new and clean. After a short period of time, a thin layer settles on the lamps and reflecting equipment, which materially reduces the light output. Frequent cleaning of the reflectors and lamps will do much towards maintaining adequate illumination at all times. If the periods between cleaning are too long, it is necessary to add a higher depreciation factor to cover this absorption of light. In other words it will be necessary to add lamps that are far too large for the job, in order that the intensity of illumination will be adequate when the units are dirty.

DEPRECIATION OF LAMPS

The type of lamp, and the size of the lamp used, is an important factor in the various illumination systems, and if not well maintained, will result in a decrease of the illumination on the working plane. The lamp used in the reading room is one of the standard brands with a capacity of 200 watts.

An important factor in the quality of the lamps--all too often overlooked-- is their average efficiency during life. Lamps of poor quality may show a high light output when new, but due to shortcomings in manufacture their light output will fall off rapidly as they are burned, and they will produce considerably less total light than lamps of standard quality.

The life of a lamp may be compared with that of people. Some live to an old age, and some die in their days of youth. So it is with lamps. Some will live longer, others shorter, than their rated life, but under normal operating conditions the

average for the common types of lamps will be close to their rated life of 1000 hours.

UNDERVOLTAGE BURNING OF LAMPS

As the lamp is burned small particles of tungsten are evaporated from the filament and collect on the bulb of the lamp in the form of a dark deposit. With the type C lamp the gas current carries these particles to the upper part of the bulb, where they have less effect in absorbing light than when deposited directly opposite the filament. Nevertheless, any accumulation on the interior surface of the bulb absorbs light, and blackened lamps should of course, be replaced. Not only does this black deposit occur on the inside of the lamp bulb, but dust collects on the outer surface. This accumulation cuts down the light from the lamp and should be removed at the time the reflectors are cleaned. This is often more serious than realized.

It is also important to use lamps of the proper voltage. While initially the installation may be correct as to voltage, on replacing or ordering additional lamps an error may be made in specifying their voltage. Lamps are designed to operate at the voltage indicated on the label. This voltage rating takes into account renewal and energy costs. If the circuit voltage is appreciably higher than the label voltage, the result will be a short lamp life. If the voltage at the socket is considerably lower than that indicated on the label of the lamp in use, it will not emit the proper quantity of light. To make up for this loss of illumination, it would be necessary to install additional lamps. For instance, seven lamps operating at rated efficiency will give an amount of light equivalent to eight

lamps operating 4 volts below the rated efficiency of the lamps. Where the voltage of the system fluctuates during the day, or where it varies in different parts of the installation, it is proper to order lamps as near the average of this variable voltage as possible.

Figure 12, page 40 shows the variation of the voltage applied to the main reading room. This voltage was recorded on the voltage recording voltmeter.

PROPER LAMP FOR THE REFLECTOR

In addition to the importance of using lamps of the correct voltage, care should be taken to use lamps of the correct size to fit the reflectors. This is especially true in the case of open reflectors. Tests have been made with various types of reflectors, using the correct size lamp, and the smaller capacity lamp, and the results were surprising. A 200 watt lamp was used with an open reflector, and the efficiency was 66 percent, and a 150 watt lamp was used with the same reflector, and the efficiency was only 61 percent. If the lamp is brought too low in the reflector, the results are that glare will be produced, which is very uncomfortable to the eye.

REFLECTORS

The type of reflector used in the reading room, is the X-Ray, clam shell reflector manufactured by the Curtiss Lighting Inc., and is designed for 200 watt lamps.

Thie reflector is the result of skill in glass making, expertness in scientific design of contour, extreme care in the application of its chemically pure coatings of silver and exterior finish. It is built to last for years under all service conditions, if not abused. Each reflector is made of one piece, blown of tough glass and, in the heat of the furnace, glazed so that dust will not readily adhere to its surface. The glass used in the manufacture is of particularly superior and diamond like quality, resulting in an extreme brilliance in the reflecting surface, which is the measure of highest efficiency in reflecting power.

This reflector is designed to break up and diffuse the light rays of powerful incandescent lamps, thus eliminating all streaks and uneveness in the lighting. Molded into the reflector surface is a double system of patented radial and spiral corrugations, producing a remarkable smoothness in the lighting results.

The physical laws of light control are utilized in the design of the reflector contour. Inherent in its qualities are substantial ruggedness, a carefully planned design based upon expertness knowledge, and the requirements of practical performance in service.

It has been found that the maintenance of the installations using X-Ray reflectors is very simple. It is only necessary

to use a dry cloth to remove any dust accumulations, and the original brightness is at once restored. The reflecting surface itself is never touched in cleaning, as one side is protected by glass and the other by the special backing.

A drawing of this reflector is shown in Figure 1, page 19, and a table of the various dimensions of the reflector to be used with different size lamps.

Figure 2, page 20 is a drawing showing the photometric curve for the X-Ray, clam-shell cove reflector used in the main reading room of the library.

INDIRECT LIGHTING REFLECTORS FOR LUMINAIRES & COVES

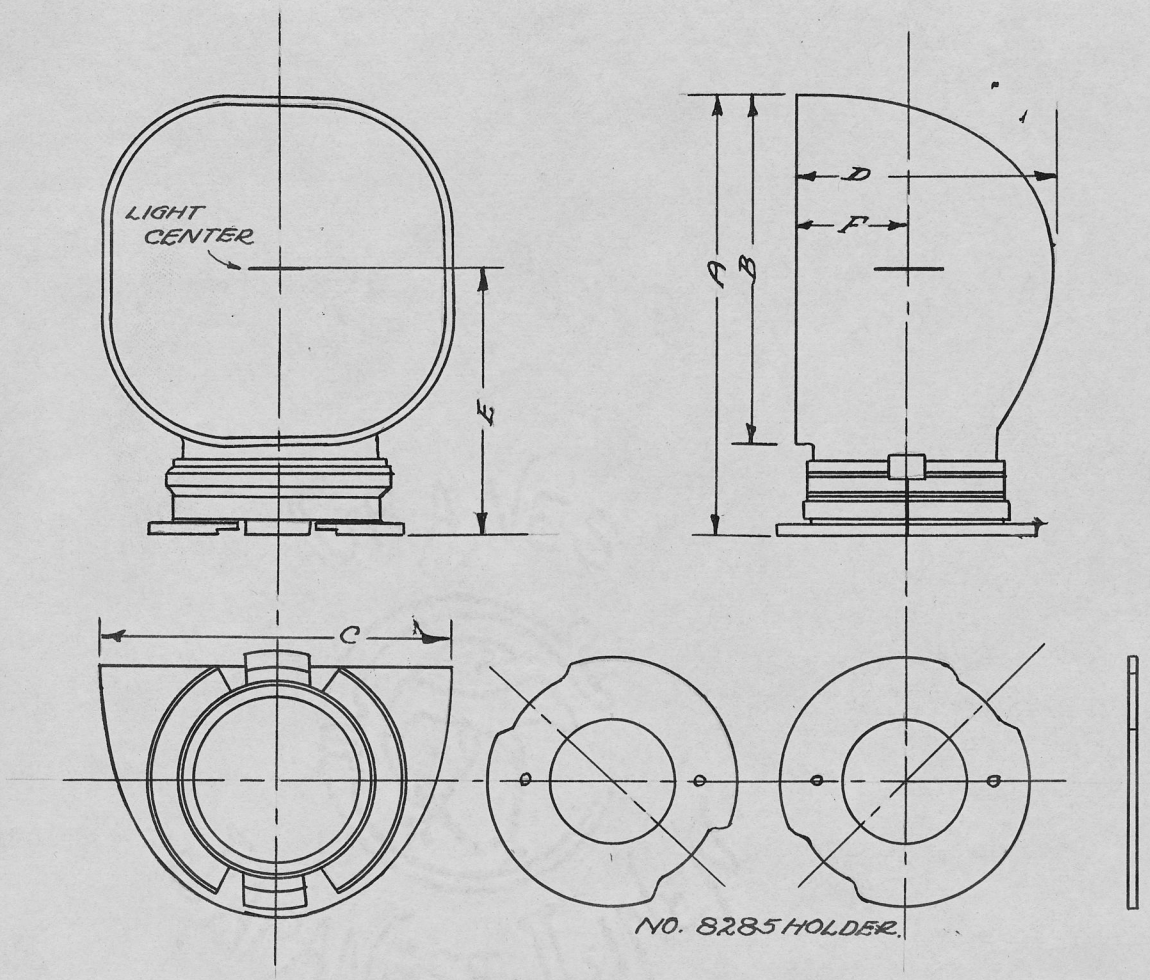

UNIT NO.	REFLECTOR	HOLDER	LAMPS	A	B	C	D	E	F
8305	EC-50	8285	40W-A21	5 1/16"	4"	4"	3 1/16"	2 1/4"	1 5/16"
8305	EC-50	8285	50W-A21	5 1/16"	4"	4"	3 1/16"	2 3/4"	1 5/16"
8310	EC-100	8285	60W-A21	6 1/2"	5 1/8"	4 5/8"	3 5/16"	3 1/4"	1 3/8"
8310	EC-100	8285	100W-A23	6 1/2"	5 1/8"	4 5/8"	3 5/16"	3 7/8"	1 3/8"
8315	EC-150	8285	150W-PS25	7 1/2"	5 3/4"	5 1/8"	3 1/2"	4 3/4"	1 3/8"
8320	EC-200	8285	200W-PS30	8 5/8"	6 3/8"	5 3/4"	4"	5 1/2"	1 1/2"

FIGURE 1

JES.

CURTIS X-RAY REFLECTOR NO. EC-200
PHOTOMETRIC CURVE.

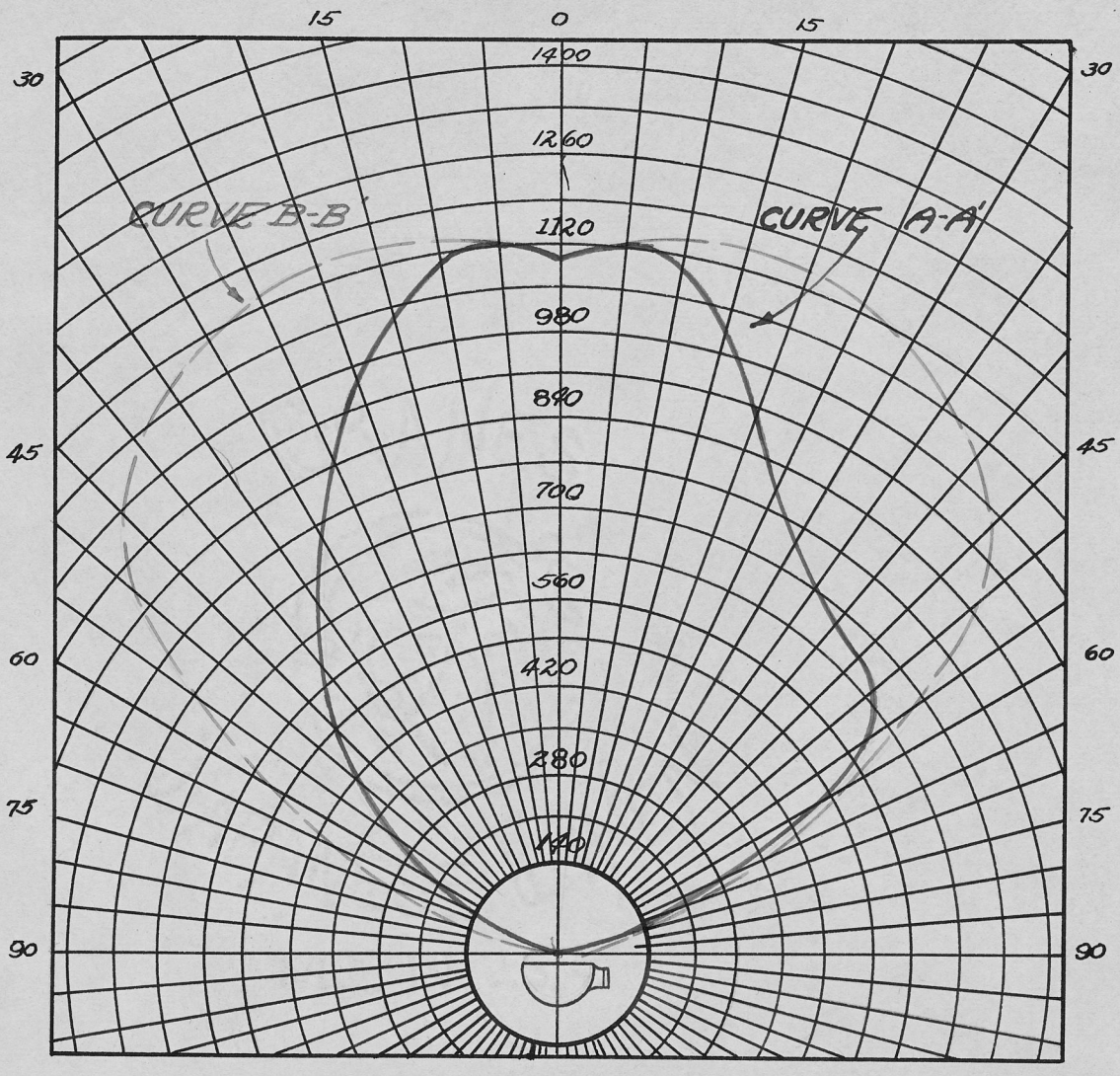

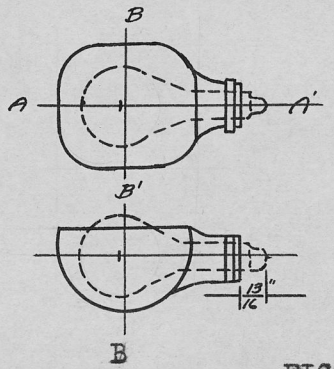

LAMP-WATTAGE-200
BULB - PS-30
HOLDER NO. 8285

FIGURE 2

JES.

METHOD OF PERFORMANCE

In performing this test, the foot-candle meter was the only instrument used. The same method was followed in obtaining all of the data to plot the contours on the blue-prints. The contours represent the same intensity of illumination at all points in foot-candles.

The blue-prints are numbered 1, 2, and 3, and are plan views of the reading room of the library, showing the position of the tables, location of light banks, and the contours of illumination, which were taken at table level. The foot-candle meter was kept at table level throughout the test, for both the tables and floor readings.

The meter was first placed against the wall and a reading taken. Then the meter was moved out from the wall toward the center of the room, until the meter read some predetermined value of illumination intensity which was proportional to the total change in intensity across the room, so that the contours would show to the best advantage the illumination level. The meter was moved straight across the room in this manner while the readings were taken at definite intervals. The points as read were plotted directly on the drawing. Then the points of equal intensity could be read directly from the blue-prints by interpolating between the contours and the difference in illumination level. These contours are the lines of equal intensity at the various points in the room, and are continuous lines connecting the points.

Great care was taken while taking these readings, so as not to cast any shadows on the cells of the foot-candle meter, and also not to shake the meter while moving it about from place

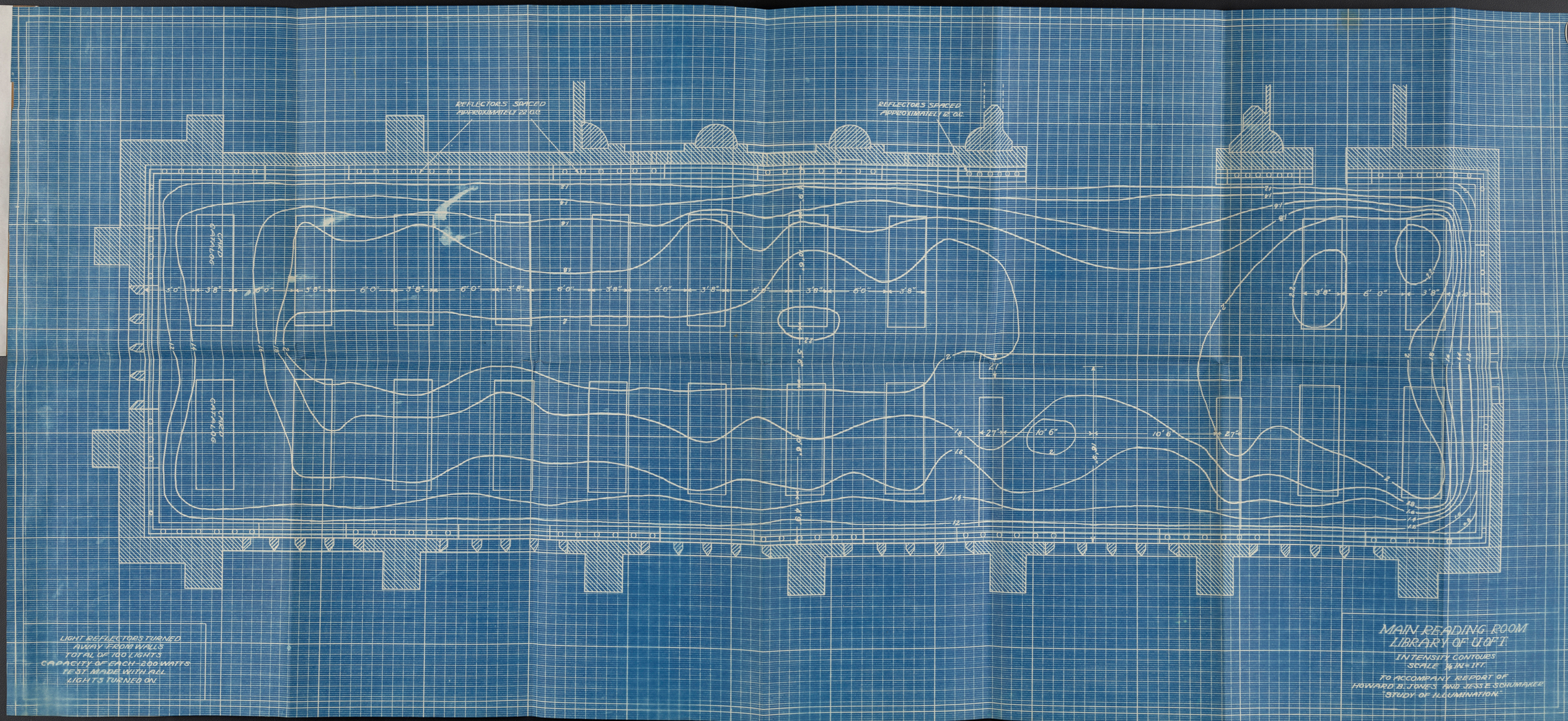
REFLECTORS SPACED APPROXIMATELY 12'-0" O.C.
REFLECTORS SPACED APPROXIMATELY 12'-0" O.C.
STEEL STACKS
STEEL STACKS
3'-8"
6'-0"
3'-8"
6'-0"
3'-8"
6'-0"

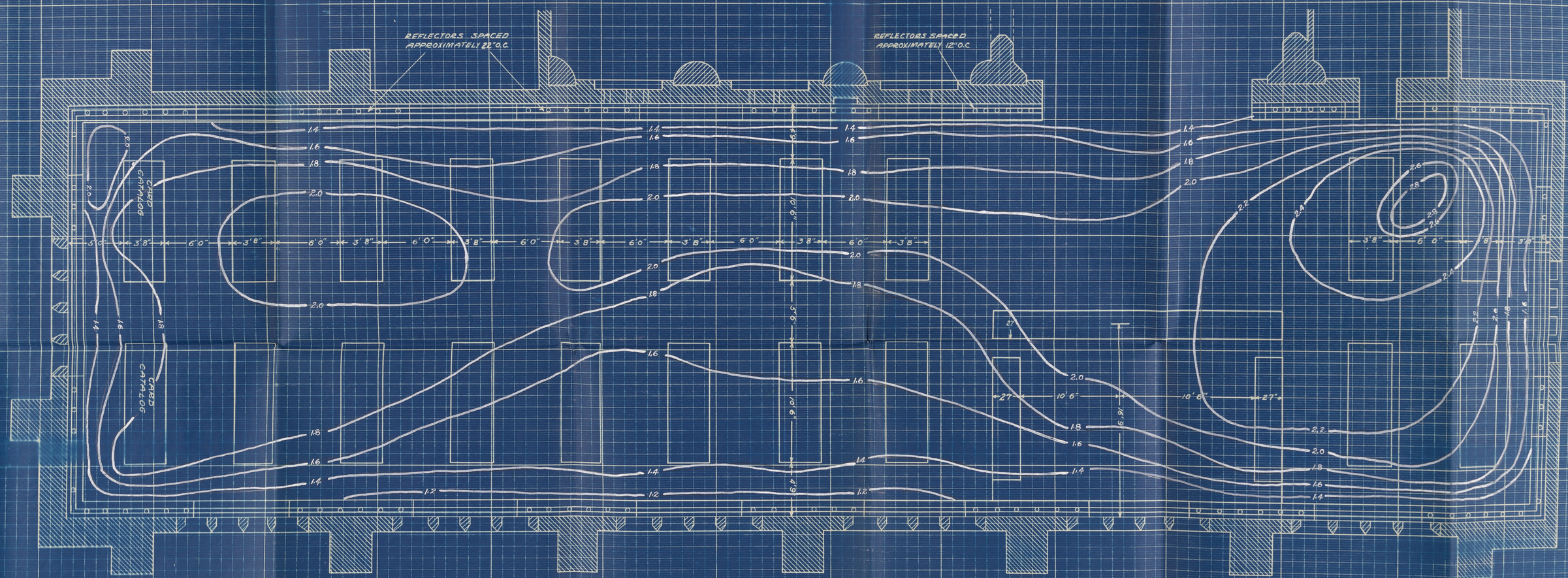

LIGHT REFLECTORS MAKE 90 DEGREE ANGLE WITH SIDE WALLS. TEST MADE WITH ALL LIGHTS TUENED ON. 100 LIGHTS-CAPACITY 200 WATTS EACH.

MAIN READING ROOM
LIBRARY O.F.U.OF T.

INTENSITY CONTOURS
SCALE ¼-IN=1FT

TO ACCOMPANY REPORT OF
HOWARD B. JONES AND JESSE E. SCHUMAKER
"STUDY OF ILLUMINATION"

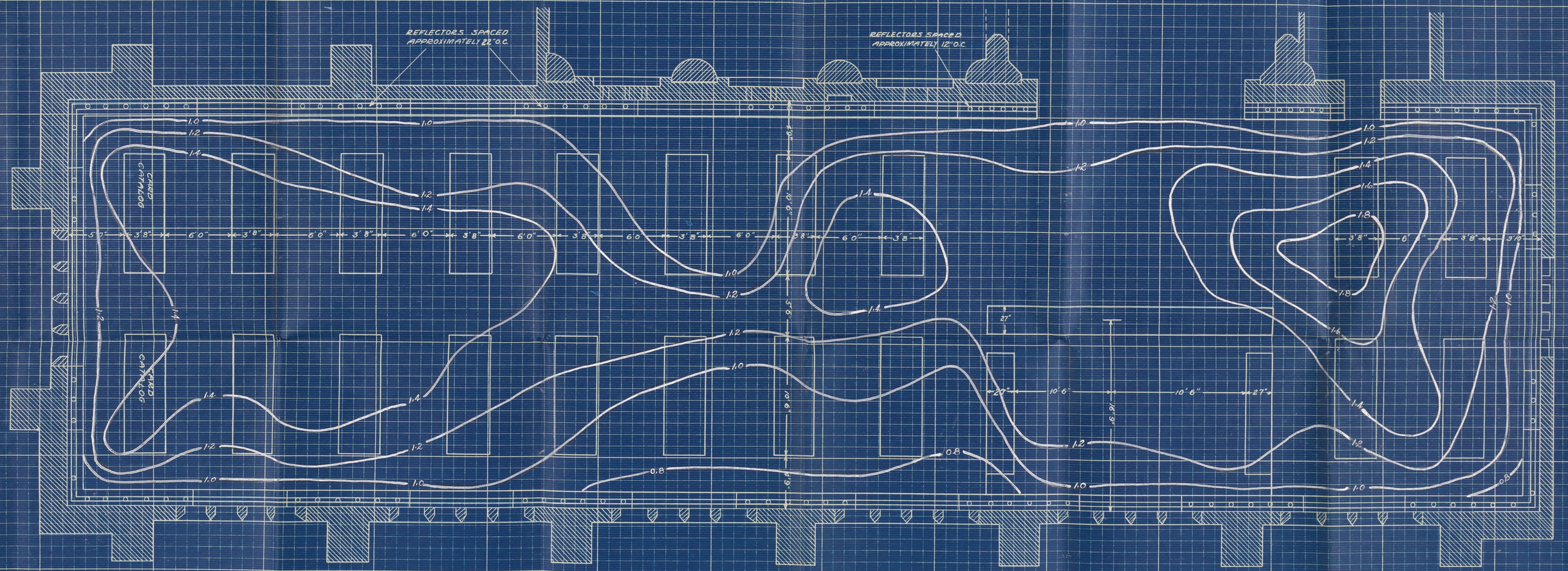

LIGHT REFLECTORS MAKE 90 DEGREE ANGLE WITH SIDE WALLS. TEST MADE WITH EVERY OTHER LIGHT TURNED ON. 100 LIGHTS - CAPACITY 200 WATTS EACH.

MAIN READING ROOM
LIBRARY OF U. OF T.

INTENSITY CONTOURS
SCALE 1/4 IN = 1 FT.

TO ACCOMPANY REPORT OF
HOWARD B. JONES AND JESSE E. SCHUMAKER
"STUDY OF ILLUMINATION"

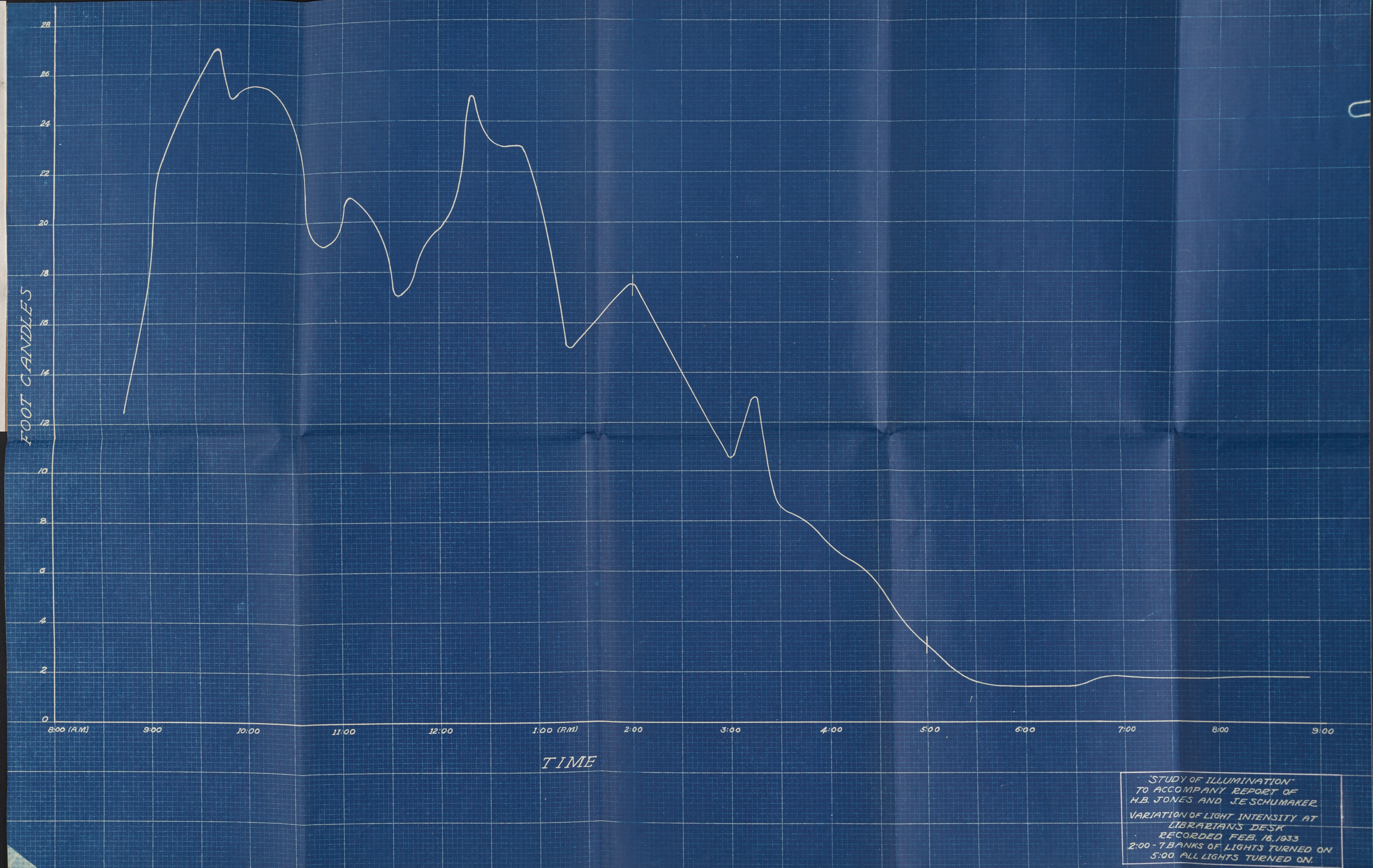

"STUDY OF ILLUMINATION"
TO ACCOMPANY REPORT OF
H.B. JONES AND J.E. SCHUMAKER

VARIATION OF LIGHT INTENSITY AT
LIBRARIANS DESK
RECORDED FEB. 16, 1933
2:00 - 7 BANKS OF LIGHTS TURNED ON
5:00 ALL LIGHTS TURNED ON.

to place in the room. To do this, a stand mounted on rubber tired wheels was used, which was the same height of the table tops. This movable support was wheeled between the tables and the readings recorded, and then the meter was placed on the table top, and the readings recorded and plotted on the drawing, to make the points complete for the contours.

Blue-print number 1, Figure 3, shows the contours for the test made with all the lights in service, with the reflectors for the lights turned so that no light was cast directly back against the wall, but directed to reflect the light on the ceiling. The maximum intensity of the light was found to be 2.2 foot-candles.

Blue-print number 2, Figure 4, shows the contours for the test made with all lights turned on, and the reflectors turned so that the walls back of the reflectors received some direct illumination. The reflectors, in regard to the open side, were horizontal for this run. The maximum intensity of the light was found to be 2.8 foot-candles.

Blue-print number 3, Figure 5, shows the contours for the test made with the reflectors turned in the same position as in the second test, but with every other light turned off, making just half of the lights burning. The maximum intensity of the light obtained in this test was found to be 1.8 foot-candles.

Blue-print number 4, Figure 6, is a graph plotted with time against foot-candles of illumination and shows the relation of the varying intensity during a period of 12 hours through the day. The readings were taken from the librarian's desk and were recorded at every 15 minute intervals. It will be noticed that

at 2:00 P.M. 7 banks of lights were turned on, and at 5:00 P.M. all the lights were turned on, and the intensity decreased to 1.8 foot-candles.

In all of the different tests made, the reflectors and lamps were as clean as possibly could be obtained. In some of the lamps, the filament had deteriorated and smoked the inside of the bulb, but the outside of the lamps were clean.

These three tests were made after 9:00 P.M. when the voltage was being held constant at 110 volts.

SUGGESTIONS FOR INCREASE IN EFFICIENCY

The use of a library reflects to a greater or less degree the intellectual and artistic standing of the school, and there is, perhaps, no better way to invite the students than by making the interior attractive and comfortable. Even though the building is beautifully designed and well provived with books, unless its lighting is suitable and adequate, it is not a thoroughly effective institution. The primary function of the lighting installation is to enable printed matter to be read with ease, but in addition it offers an opportunity for accentuating the architectual design and beauty of the building.

In direct illumination as used in this reading room, should offer ceratin advantages in eliminating reflection from the polished table tops and provide good illumination on vertical surfaces as shelves and files, without the use of special lamps. The absence of hanging ceiling fixtures makes this particular installation especially effective and gives the room an appearance of spaciousness. With the units placed in the cove positions, they are easily accessible, making maintenance a simple matter, and, with cleanliness, the initial efficiency of the installation can be retained.

In addition to the general illumination of from 8 to 10 foot-candles, local lighting should be supplied on the tables. These lamps should be very carefully chosen, so placed and of such a character that direct or reflected glare is minimized. Many standard types in wide use are most appropriate and productive of eye fatigue. A number of special designs are available

which carry out the principles involved. An even distribution of light on the table top of an intensity of 6 to 8 foot-candles, is suitable, although higher intensities are sometimes necessary where faded manuscripts or books with very fine type are likely to be used.

In many respects proper table lighting is an economy, producing a high intensity over the working plane and area while a lower intensity is sufficient in the rest of the room. This is particularly important in the library at night where but few readers are likely to be present. Each reader will then control his own local illumination; the attention will be concentrated upon the work, and with such an installation as should be in the library, the body of the lamp in effect isolates readers on opposite sides of the table. Figure 7 page 27, shows a drawing of the type of desk light suggested for the tables of the reading room, and a discussion on this lamp will be found on the next page of the text.

This type of table lamp would increase the illumination of the room, and make this room a desirable place to study.

LIBRARY TABLE LAMP

There should be a local illumination in the reading room, which may be produced by a type of table lamp designed, so as to give an illumination of an extremely comfortable quality for reading purposes. A lamp of this design is shown in Figure 7 page 27.

This type of lamp is constructed in the form of a continuous trough, and eliminates glare both direct and reflected, distributes the light uniformly and presents a pleasing appearance. As noted from the figure, the primary source of light is enclosed in the reflector, which after a series of reflections from the mirrors and diffusing plates, delivers to the table tops an illumination of extremely uniform and glareless quality. The switching arrangement may be constructed in a manner such that the lamps may be controlled in sections and only that portion of the table may be illuminated which is actually in use by the reader.

The height of the bottom of the lamp is planned, such that the only light visible from any point in the room is that which is reflected. The height of the top of the lamp is planned to prevent a general view about the room, thus tending towards concentration of attention. The exterior of this lamp may be constructed so as to harmonize with the furniture of the room.

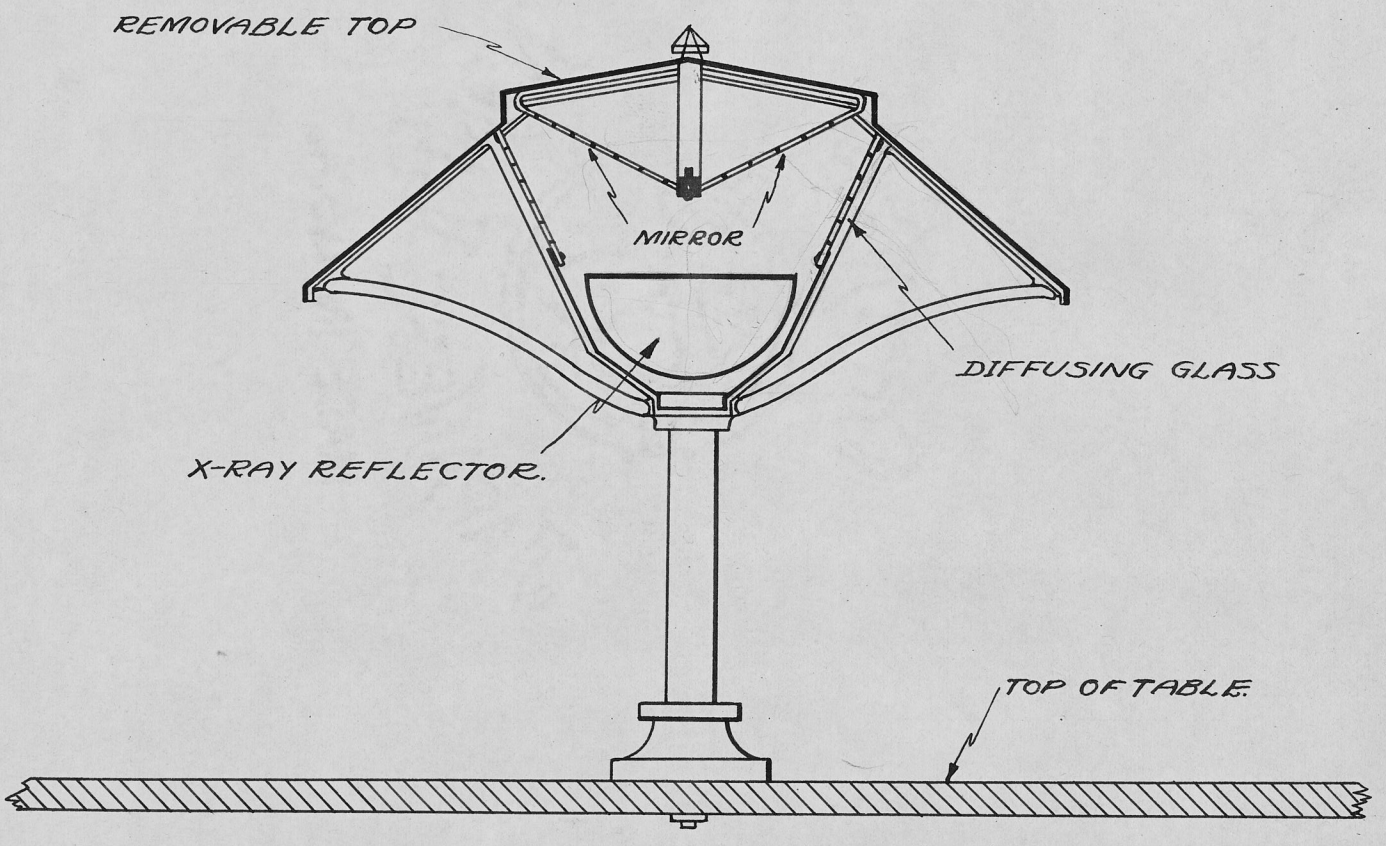

DIAGRAM SHOWING THE PRINCIPLES INVOLVED IN THE SPECIAL LIBRARY TABLE LAMP.

FIG. 7

JES

There is still another type of lighting system that can be introduced as a suggestion to increase the efficiency of the reading room. This type is the addition of several direct lighting units, which would be placed on the side walls, at the corbel, which is the supporting projection from the face of the side walls for the concrete beams or girders to rest on. This unit would consist of "King" No. 500, Curtis X-Ray reflector, designed for a 200 watt lamp, a 200 watt lamp, X-Ray form X type holder, and recessing equipment, which is the X-Ray ceiling flange.

This type of light could be installed, so as to direct the light on the side walls, and produce more light on the working plane. This type of installation is shown in Figure 8, page 29. The "King" X-Ray reflector is shown in Figure 9, page 30, and the photometric curve for this typeof reflector is shown in Figure 10 page 31.

This direct system of lighting will of course, produce a glare, and in order to prevent this objectionable feature, the use of louvers is favorable, which will make the presence of this light very helpful, and at the same time conceal the lamp filament from view.

These louvers are made of heavy gauge sheet iron fins, spot welded to a steel band. The louvers are held in place in the reflectors by ,eans of spring clips inserted in the reflector dimples, which bring them flush with the bottom, as shown in the illustration, Figure 11, page 32.

DIAGRAM SHOWING METHOD OF INSTALLATION OF DIRECT LIGHTING UNITS TO INCREASE INTENSITY OF LIGHT ON WORKING PLANE.

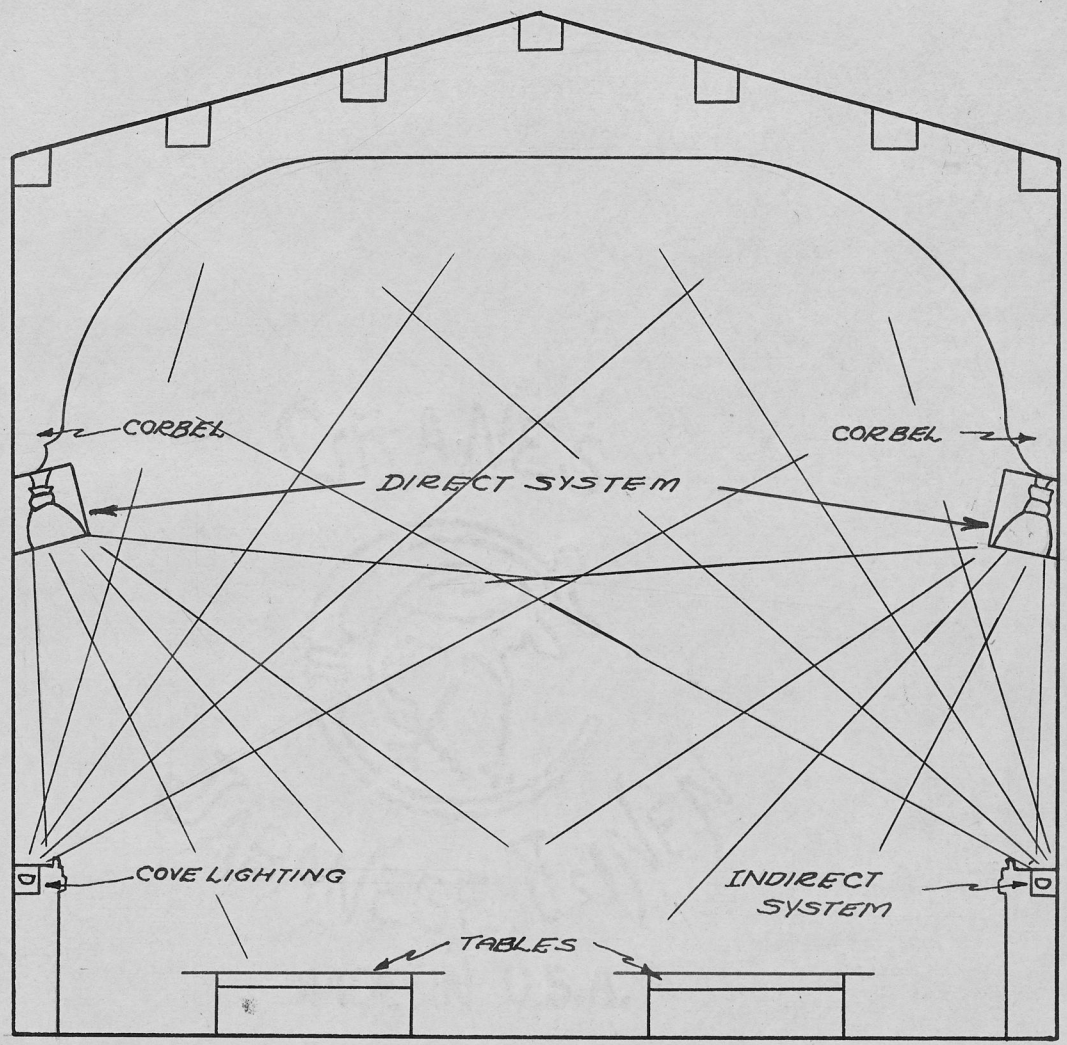

COMBINATION OF BOTH DIRECT AND INDIRECT SYSTEMS OF ILLUMINATION FOR INTERIOR LIGHTING OF READING ROOM.

FIGURE - 8

X-Ray Reflectors



King No. 500

Lamp—200 watt Mazda.

Holder—X-Ray Form X type included. (Fits any socket.)

Color Equipment—X-Ray "Color-Ray" No. 55.

Recessing Equipment—X-Ray Ceiling Flange No. 11500.

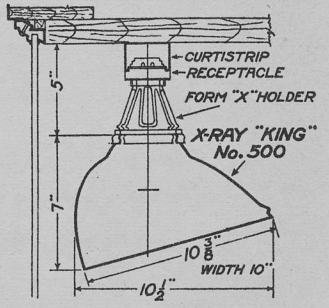

Typical method of installing King in a show window.

Figure 9

X-RAY "KING" REFLECTOR NO. 500

PHOTOMETRIC CURVE

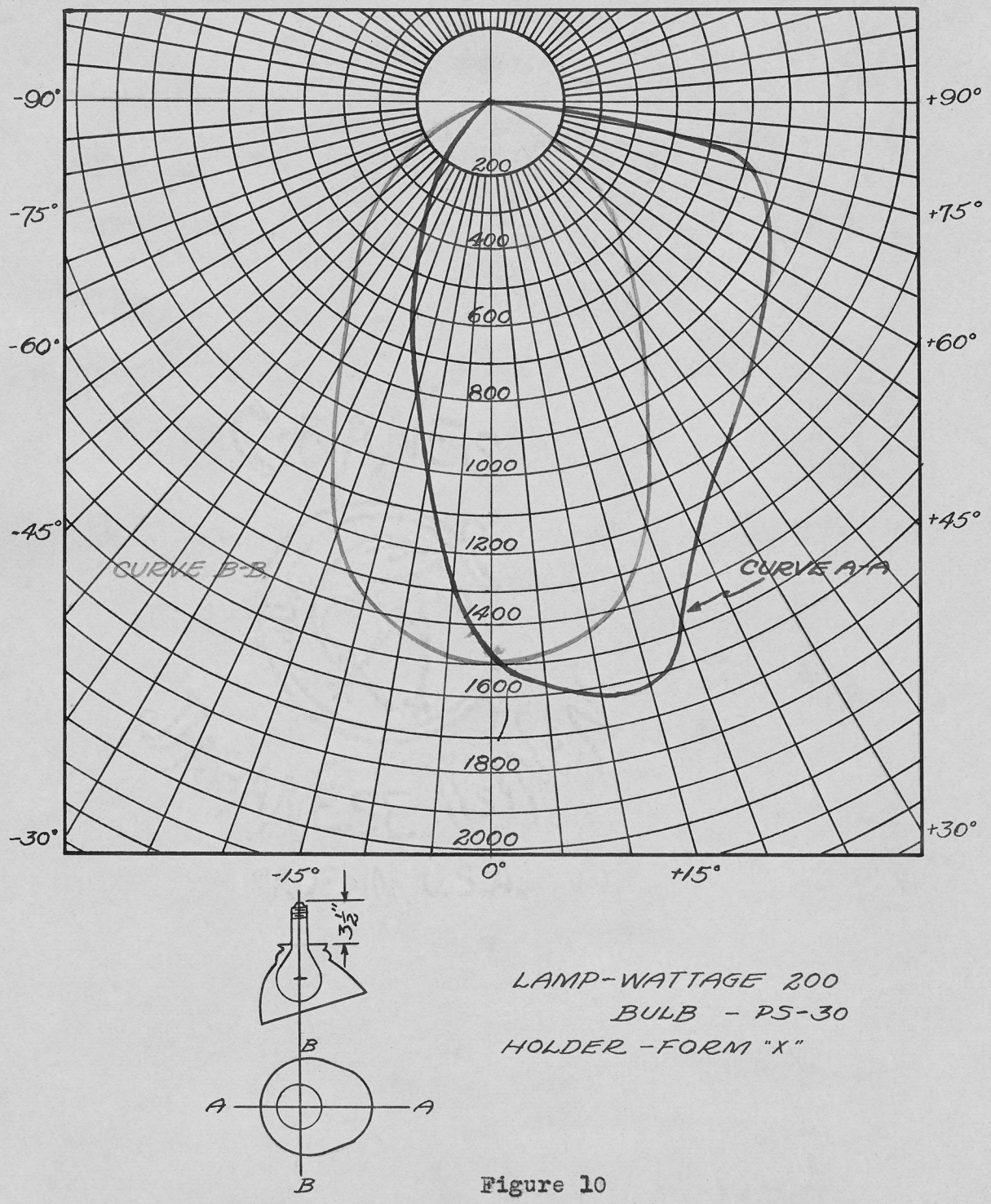

LAMP-WATTAGE 200
BULB - PS-30
HOLDER - FORM "X"

Figure 10

J.E.S.

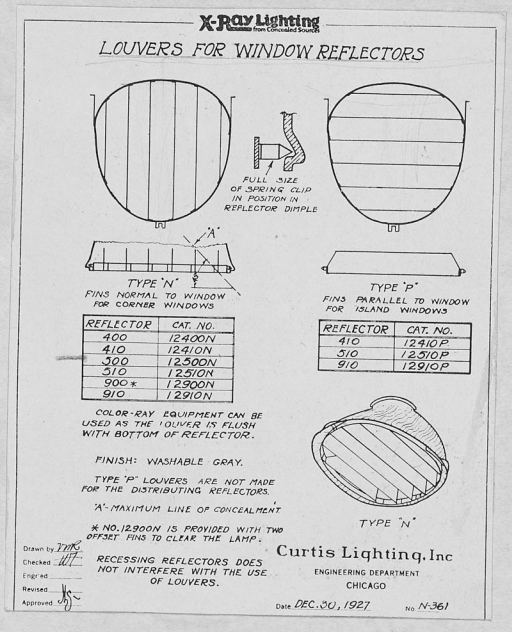

Figure 11

The above drawing shows the louver, the spring clip used to holdit in the reflector, and its apperance after placed in reflector.

CEILINGS AND WALLS

The walls of the room should be painted as often as necessary, with a good grade of paint, because in just a short period of time, a thin layer of smoke and dirt, and soot collect on the ceiling and walls, thus causes a large decrease in the illumination of the light in the room. The ceiling is so painted and decorated, that it would be impossible to paint it as often as the side walls, but the sidewalls should be maintained clean in order to increase the efficiency from approximately 67 percent to the maximum percentage. Below is a discussion on the economics of proper painting.

ECONOMICS OF PROPER PAINTING

It is true that is is appreciably more expensive to paint an interior correctly than to apply some grade of paint which depreciates rapidly or has initially low reflecting power, but careful analysis reveals the expenditure is well warranted.

The effect of reflection factor upon the resultant illumination is very great indeed. If all surfaces of the room were black with no reflecting power, the illumination on any surface would be only that received direct from the lamps. If all surfaces had a reflecting power of 50 percent, the illumination would be practically doubled. If the reflection factor of surroundings were in order of 90 percent, the illumination would be increased nearly ten times.

As a practical case one might consider a room where the ceiling is painted with a poor type of oil paint which depreciates

quickly, or loses its reflecting power very rapidly; lighted by indirect luminaires. It is safe to assume that at the end of two years the illumination will have decreased not less than 20 percent due to the reduction in reflecting power of the ceiling, other conditions being constant. But actually, other conditions are not constant. The reflecting power of the walls will also undergo a loss and it is probably safe to assume that the use of poor paint alone results in a progressive loss of light amounting to at least 15 percent of that measured at the beginning of the year.

Another suggestion for the increase in the efficiency of the light is the effect of the voltage in the lamps. The effect of a constant voltage in the lamps will tend to increase or decrease the illumination, as was discussed in a previous part of the text. If a constant voltage of 110 volts can be maintained, the intensity of the light will remain constant, and not vary as it does with a variable voltage.

Figure 12, page 40 shows the variation of the voltage applied to the lamps of the main reading room. This voltage was recorded on a voltage recording voltmeter.

CONCLUSIONS

The following data is offered as a brief summary of a few of the fundamental considerations underlying the design of interior lighting, in regard to the indirect system used in the main reading room of the library.

AVOID GLARE

Glaring light sources are responsible for the failure of many lighting systems. Glare causes eye strain and fatigue, interferes with the vision, and may be caused by exposed light sources or contrasts in surface brightness. These may be avoided by properly shading the lamps and distributing the light uniformly within the field of view.

DISTRIBUTION OF LIGHT

The degree to which shadows are minimized is dependent upon the distribution of light. A diffused light softens shadows because it comes from many directions; a unidirectional light creates dark, sharp shadows. Each system has its field of application, a well diffused light best fulfilling the conditions of the room and a strongly directional light being required at times to give proper form to architectural features.

LIGHT INTENSITY

The intensity of illumination required is dependent upon the character of work and the nature of the building. Sufficient intensity should be provided to enable the eye to function properly and to comfortably do that which is required of it.

Below are a few suggestions how to get the proper amount of light, which is put into the illumination of the room:

1. Keep the lamps and reflectors clean.
2. Maintain a light colored interior finish.
3. Fill empty sockets and replace burned-out and blackened lamps with new ones of the correct size and proper voltage rating.
4. Make some reliable employee responsible for the work of maintenance, and see that he gets credit for doing a good job.

The radiators are built in the book stacks and throw their heat directly up against the side walls and windows, thus picking up any dust particles that are in the air and depositing them on the walls and ceilings. If the radiators were equipped with hoods, which would diffuse the hot air toward the center of the room, the efficiency would be increased materially because the heat would then carry the dust particles away from the walls.

Direct lighting units could be installed at definite intervals so that the light from each could overlap just enough to produce an equal illumination level over the whole room.

Below is a table showing the approximate percentage of light that is lost in the main reading room of the library.

Loss due to dirt on walls	50% to 70%
Loss due to lamps deteriorating	5% to 10%
Loss due to discoloring of paint	5%
Loss due to dirty reflectors	3% to 5%
Loss due to low voltage	10% to 15%

BIBLIOGRAPHY

BOOKS:

1. "Light and Work," by M. Luckiesh.
2. "Illuminating Engineering," by Francis E. Cady and Henry B. Dates.
3. "The Lighting Book," by J.L.Stair, Curtis Lighting Inc.

BULLETINS:

1. "Lighting of Public Buildings," Bulletin L.O. 135 Index 35, Edison Lamp Works of General Electric Company.
2. "Maintenance of the Lighting System," Bulletin L.D. 10LA, Index 14; Edison Lamp Works of General Electric Co.
3. "Interior Illumination," by H. E. Mahan, of the General Electric Co.

APPROVAL

The foregoing thesis is hereby approved as a creditable study of an engineering subject, carried out and presented in a manner sufficiently satisfactory to warrant its acceptance as a prerequisite to the degree for which it has been submitted. It is to be understood that by this approval the undersigned does not necessarily endorse or approve any statement made, opinions expressed, or conclusions drawn therein, but approves the thesis only for the purpose for which it is submitted.

Name J.S. Tarboux

Title Professor Electrical Engineering

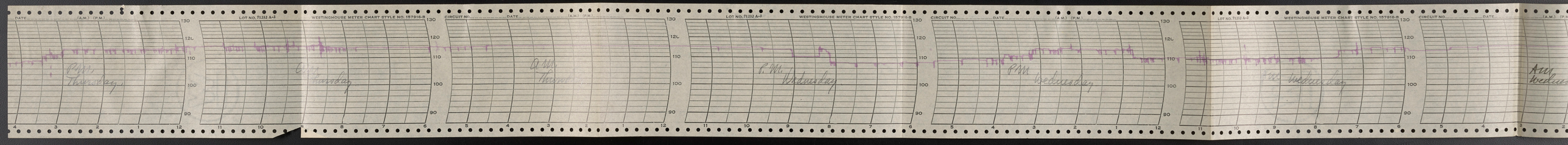
DATE (A.M.) (P.M.)
130
120
110
100
90
4 3 2 1 12
LOT NO. 71333 A-3
11 10 9 8 7 6
WESTINGHOUSE METER CHART STYLE NO. 157916-B
5 4 3 2 1 12
CIRCUIT NO.
11 10 9 8 7 6
5 4 3 2 1 12

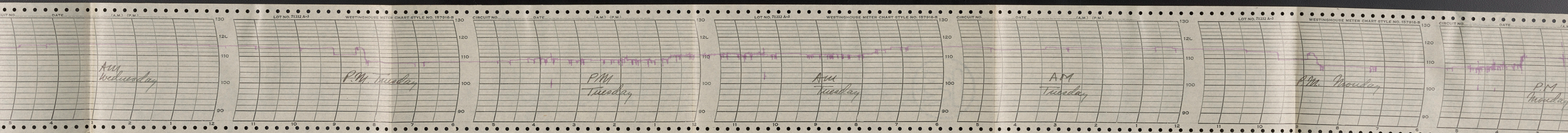
CIRCUIT NO.
DATE
(A.M.) (P.M.)
AM
Wednesday
LOT NO. 71232 A-3
WESTINGHOUSE METER CHART STYLE NO. 157916-B
P.M. Tuesday
CIRCUIT NO.
DATE
(A.M.) (P.M.)
PM
Tuesday
LOT NO. 71232 A-3
WESTINGHOUSE METER CHART STYLE NO. 157916-B
AM
Tuesday
CIRCUIT NO.
DATE
(A.M.) (P.M.)
AM
Tuesday
LOT NO. 71232 A-3
WESTINGHOUSE METER CHART STYLE NO. 157916-B
P.M. Monday
CIRCUIT NO.
DATE
(A.M.)
P.M
Monday

71232 A-3
WESTINGHOUSE METER CHART STYLE NO. 157916-R
130
120
110
100
90
10 9 8 7 6
P.M. Monday
CIRCUIT No.
DATE
(A.M.) (P.M.)
130
120
110
100
90
5 4 3 2 1 12
P.M.
Monday
LOT No. 71232 A-3
WESTINGHOUSE METER CHART STYLE NO. 157916-R
130
120
110
100
90
11 10 9 8 7 6
A.M.
Monday
CIRCUIT No.
DATE
(A.M.) (P.M.)
130
120
110
100
90
5 4 3 2 1 12
A.M.
Monday
LOT No. 71232 A-3
WESTINGHOUSE METER CHART STYLE NO. 157916-R
130
120
110
100
90
11 10 9 8 7 6
P.M.
Sunday
CIRCUIT No.
DATE
(A.M.) (P.M.)
130
120
110
100
90
5 4 3 2 1 12
P.M.
Sunday
LOT No. 71232 A-3
WESTINGHOUSE METER CHART STYLE NO. 157916-R
130
120
110
100
90
11 10 9 8 7 6
A.M.
Sunday

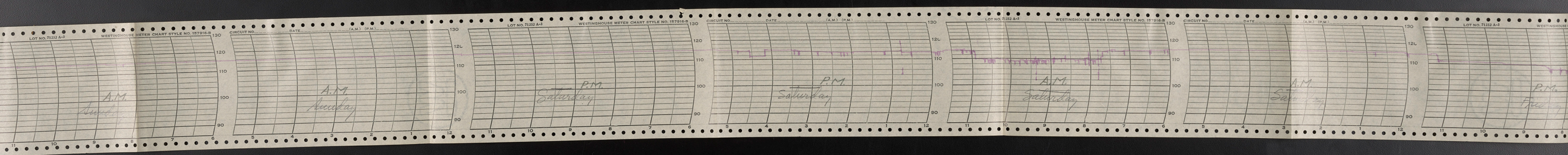
LOT NO. 71232 A-3
WESTINGHOUSE METER CHART STYLE NO. 187916-B
A.M.
Tuesday
CIRCUIT NO.
DATE
(A.M.) (P.M.)
A.M.
Monday
P.M.
Saturday
P.M.
Saturday
A.M.
Saturday
A.M.
P.M.

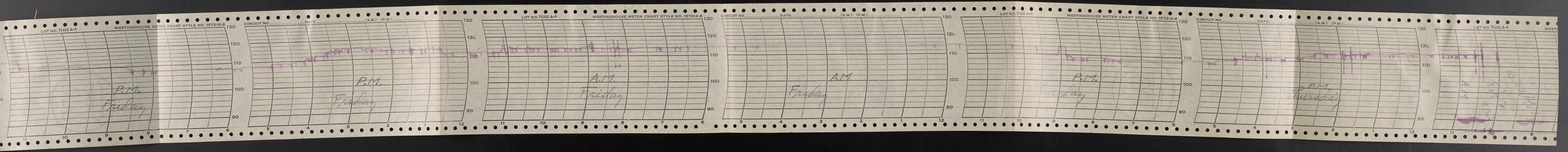
LOT NO. 71232 A-3
WESTINGHOUSE METER CHART STYLE NO. 157916-E
P.M.
Friday
CIRCUIT NO.
DATE
(A.M.) (P.M.)
P.M.
Friday
LOT NO. 71232 A-3
WESTINGHOUSE METER CHART STYLE NO. 157916-E
A.M.
Friday
CIRCUIT NO.
DATE
(A.M.) (P.M.)
A.M.
Friday
LOT NO 71232 A-3
WESTINGHOUSE METER CHART STYLE NO. 157916-E
P.M.
Friday
CIRCUIT NO.
DATE
(A.M.) (P.M.)
P.M.
Thursday
LOT NO. 71232 A-3
WEST