MABE 460
MABE Dept.
College of Engineering
University of Tennessee, Knoxville

1 May 2015

ME460 Senior Design

Hand Adjustable Position Override for Large Exit Bin

Spring Project Report Prepared for:

Don Spitz
Lexmark
dnspitz@lexmark.com

Steven Foster
University of Tennessee
lfoste10@utk.edu

Prepared by:

David Bryan
dbryan4@vols.utk.edu
Kelsey Grover
kgrover@vols.utk.edu
David Michalik
dmichali@utk.edu
Alex Wiseman
awisema1@vols.utk.edu

Please direct any questions or concerns to any of the emails above.

Abstract/Objectives
The objective of the "Hand-adjustable position Override" was to improve the user experience in regards to retrieving output from the printer tray from a 1000 sheet elevator-style printer tray. Specifically, the tray should remain stationary when the user is retrieving jobs to prevent any inconvenience that would be caused by the tray moving or more jobs printing while retrieval is in process. Furthermore, the tray must resume its height-adjustability after user adjustment and output retrieval. In addition, it is desired to allow the user the ability to manually adjust the bin, which is currently not possible with the self-locking gear system. With the objective of improving the overall user's experience in retrieving output from the tray, radical design changes of the tray were explored. Initially, we brainstormed any revisions to the physical design of the tray such as multiple trays, layered trays, etc. Through a comparison of ideas and critiquing the concepts from a users experience perspective, physical tray redesign gave way for simpler approaches that would more directly address the initial objectives as stated above. We also wanted to more fully understand printer users habits through real-life data in order to understand the problem more fully, by analyzing printers in use in various settings. Ultimately, the objective is to design a system that allows unobstructed media removal from the tray, manual operation options, and a return of the bin to normal operating conditions.

Problem Description
In a networked environment, a large amount of print jobs can accumulate in the output tray of large printers. Users will typically take all of the output of the tray off the printer, find their job, and then return the remaining jobs to the printer tray. In the current design, in order to achieve neat exit bin media stacking, the tray may adjust itself up to the top position to receive the next job or a new job may print during retrieval, both of which interfere with the user and can potentially be hazardous. In an effort to fix the problem, it is desired to design a more user friendly output bin system that allows efficient removal of output from the bin, return of unused output to the bin, and then a resumption of printing.

Background
The average printer has a stationary printer output tray that is sufficient for a medium to low volume of printing. These fixed output trays can have capacities of up to a couple hundred sheets, however it is rare for there to be more than about hundred sheets in the output tray. In the following figure, Figure 1, an example of a fixed output tray printer is given:

Figure 1. Lexmark MS310/410 Series Printers with fixed output tray.

For higher volume operations, where there are multiple users printing jobs frequently or where there is a large network sharing the same printer, a tray capable of handling much larger volumes of outputs is necessary. The trays for these high volume situations can be designed to receive up to a thousands sheets. This large capacity solves the problem of the printer over spilling a standard tray of a couple hundred sheets, but causes new problems in the process including the drop height between the paper output and the tray, which causes messy stacks of paper. For a smaller printer, the paper will stack sufficiently well for a small range of job sizes from a few pages to a few hundred pages. With the large output trays of up to a thousand sheets, however, the drop height would be too large, making neat stacking impossible. The current solution to this is an output tray position system that adjusts the height of the tray to maintain a consistent small drop height that allows the output to stack neatly, no matter how large or small the job is. In the following figure, Figure 2, an example of a large volume printer is given with a variable-height tray system:

Figure 2. Lexmark x860 with paper finisher/handler with large output variable height tray system.

With an adjustable tray system (printer with a tray elevator), the height of the paper stack is sensed by photo-electric sensors that detect where the top of the paper stack is. Essentially, a beam is either broken or complete above the paper stack, and when sheets accumulate and break the beam, the tray elevator is used to lower the tray to maintain the drop height. This process can be repeated up to about a thousands sheets when the tray is full. This tray elevator is useful for solving the problem of handling high-volume printing, but causes yet another problem of disrupting the user from retrieving their output.

With the added volume of multiple users sending their jobs to the same printer and picking them up at different times, it can become difficult for users to sort through the jobs to find their respective job. Typically, the users will take the output out of the tray, sort through and find their job and then return the remaining media back to the output tray. Problems arise with tray elevators because the tray senses that the drop height will be too large since the height of all the paper the user took out is gone, and will rise to the top position or until the paper breaks the photoelectric sensor beam again. When the user tries to put the remaining media, that is not theirs, back into the tray it can cause difficulties if the tray has moved to the top or new jobs are being printed out while they are trying to replace the media. As stated earlier in the objectives

and problem statement, this is the problem that is being addressed by our solution. The ultimate goal would be for the output tray to remain stationary, since motion of the tray while the user is retrieving output would interfere with paper retrieval.. The output tray must re-gain its functionality once the paper is returned to the tray. In the following figure, Figure 3, the tray elevator system is shown. Note the light green fixed sensor card and the variable height of the tray between the top and bottom positions.

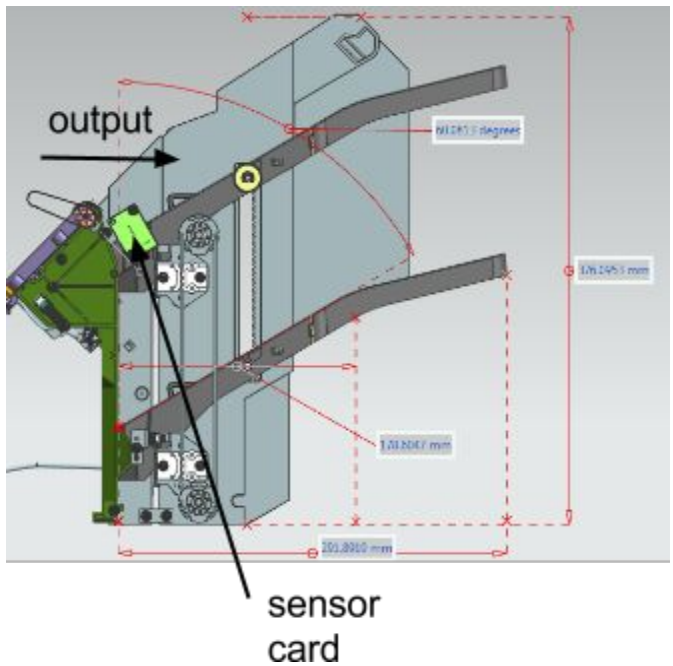

Figure 3. Tray elevator system with fixed sensor card.

In the current design of the tray elevator, motion of the tray can only be initiated by the motor because of the high gear ratio that the worm gear induces. This phenomenon is similar to a car jack where the user has to spin the handle to get the jack to move up or down. If the force of the car gets too big the jack will have a material failure before the worm gear moves. For our printer design the entire drive train would crack and fail before the worm gear moves backwards. If the user wanted to manually move the tray to a different position during output removal or replacement, it is not possible in the current configuration. In addition to the tray moving on its own after the user removes media, it is desired for the user to be able to move the tray manually. In the following figure, Figure 4, the belt system is shown with the worm gear that prohibits any movement of the tray by the user.

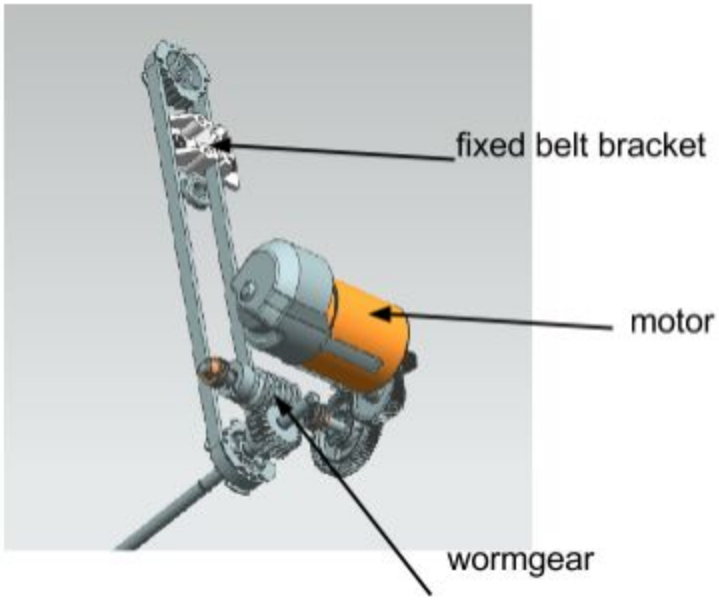

Figure 4. Tray elevator drivetrain with high gear ratio worm gear.

The tray system has two others sensors that can be of use for the solution. One is the tray bottom sensor that detects when the tray is at the lowest position and can no longer adjust its height anymore. The other is a media sensor that simply tells the printer if any output whatsoever is in the output tray. This sensor is a small tab that gets depressed when output is present. In the following figures, figures 5 and 6, these sensors are shown.

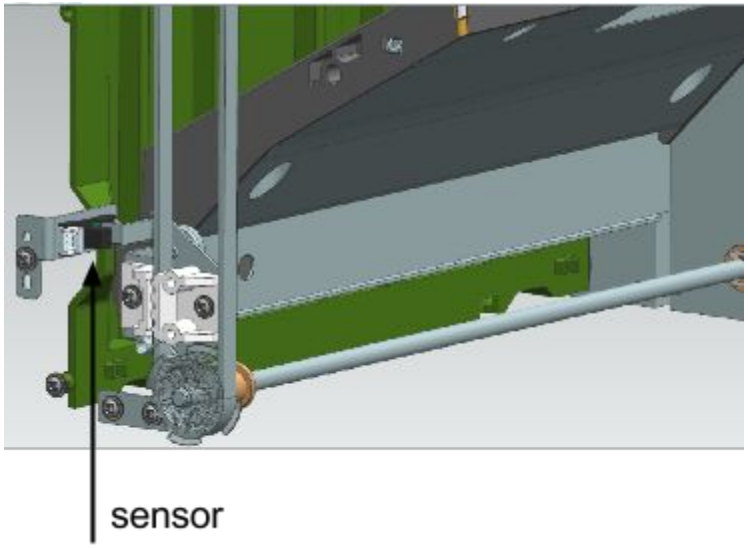

Figure 5. Bottom sensor.

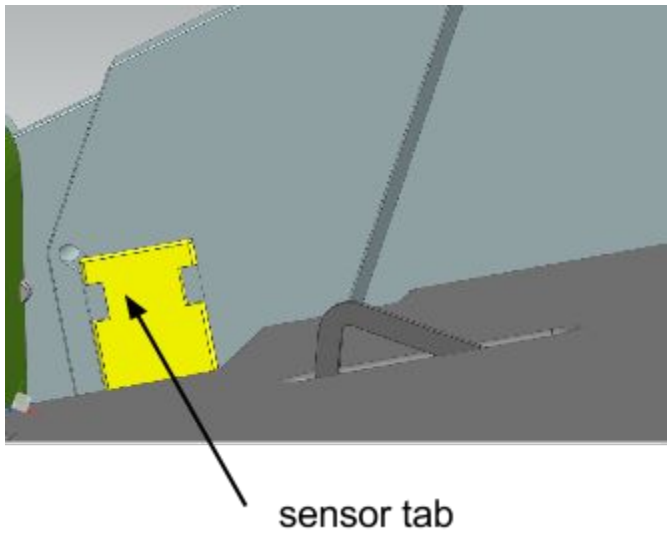

Figure 6. Media present sensor.

Summarizing the requirements of the design project are as follows:

1. Output tray remains stationary during media removal
2. No new output during output removal by user
3. Output tray re-gains elevator functionality after user is done automatically
4. User can manually lower the tray
5. Minimum number of parts and cost

Printer Specifications

The printer the manual tray operation is being developed for is not yet in production, and, as such there was limited information on the specific model. The high-volume tray (1000 sheets), though, is general to several different models, and is typically an added accessory called a finisher that is mated to the high-volume printer. For reference, we are using the Lexmark x860, with an attached finisher (paper handler). The finisher is an accessory that receives the printed page and can do optional things like punch holes and staple. This is the actual piece that has the tray elevator to receive up to a 1000 sheets of output. From the Lexmark website, this

Project Execution

The problems of the high-volume printer tray were understood to include broad parameters, meaning we could try several different ways of solving the problem before we would be able to narrow our scope. Initially, our understanding was limited to what we received in a powerpoint from Kevin, who works at Lexmark. He was our initial contact. Don Spitz (who was to be our Lexmark sponsor throughout the semester) was still in China and was not able to give us a full problem description for a couple weeks. Initially, it seemed that all we were aiming at was a revision to the tray elevator system that would allow a potential user to manually move the tray as they so desired. We had a couple brainstorming sessions to come up with possible solutions to this problem. After Mr. Spitz returned, we were able to have a conference call that cleared up a significant amount of our questions and misunderstandings. Our new scope of the problem was that we were more just trying to make it more user friendly for the users to retrieve output from the tray. In order to fully research the problem, we wanted to explore more radical ideas that may go as far to change the physical tray design itself. Again, we brainstormed ideas and came up with some solutions that might make it easier for the user to find their output. It was interesting to note that high-volume printers typically only have one main tray, even though a large amount of users use the same tray to find their job. After observing users of networked printers, testing our ideas against our own criteria and critique, we decided it was best to keep the tray the same or pretty similar to what it already was. Whereas it would be convenient to have different trays for different users, the additional problems this brings on outweighs the benefits of the users using the same tray, instead of them looking around at different trays for their job. Custom solutions may be able to provide different mailboxes or trays for each user, but, for our project, we decided this extended outside the scope.

After exploring the manual designs, and the radical tray re-designs, we finally chose to attack a solution that would change as little as possible and still address the problem to compensate for time and resource constraints. This led us to pursue simpler solutions that would both allow manual movement of the tray by the user and make it easier for them to retrieve their output.

Summary of Concept Selection and Initial Design Work

When choosing a solution, we developed a minimalistic manual solution that could easily engage and disengage the tray from the drive train with user input. This solution coupled with sensors can give the user the option to move the tray wherever he/she wants it and have the tray reset itself into printing position to keep the height that the paper drops to the tray as low as possible. This design gives the user freedom to move the tray and the sensors notice when the user is accessing the tray and delays itself from printing so that the user has an easier time finding their printed job. While this is a great mechanical solution it occurred to us that there is a software solution that can perform just as well, if not better. The idea would be that the software would

interact with the user through sensors. The only two sensor that would need to be added are an up and down button that allows the user to control the position of the tray with the motor. The photoelectric sensor at the top of the finisher could detect if a user is attempting to access the printed paper and delay itself from printing. A neat addition to this is that there could be a control algorithm that keeps track of previous jobs that have been printed. If the printer has data on how large the jobs are and how many jobs are on the tray it can then decide on a delay time that most efficiently allows the user to retrieve their paper. As an example if the printer has a large amount of small jobs and the sensor notices that a user is retrieving their job then the printer will delay printing for a fairly large amount of time so that the user has enough time to sift through the pages to find his/her job. On the flip side if the printer begins printing several large jobs then and a user sets off a sensor telling the printer that the user is looking for his/her job then the printer will do a fairly short print delay so because the user will not have a hard time finding their job. Using smart software like this would be much more efficient than the mechanical solution. The only problem with the software solution is that it does not achieve what Lexmark asked of us to begin with: a manual disengage. Also, this is a mechanical engineering project, we would not be able to showcase our developed mechanical skill set by developing a software solution. While this is a great solution, and may be better than the manual disengage, it is beyond the scope of this project.

Manual Solution Design

The manual solution we are proposing is a way to disengage the belt brackets from the belts so that the user can move the tray independently from the worm and worm gear on the drivetrain. This will allow the user operate the tray in "manual" mode which relies on the user to move the tray independent from the electric motor and drivetrain.

Now we will get into more of the detailed design of the manual solution. Figure 7 shows a belt and one fixed belt bracket that are on the original Lexmark design. Keep in mind that there is also another belt and fixed belt bracket on the other side of the printer, but we will examine just one belt bracket for the sake of simplicity since they are symmetrical. We knew our goal this semester was to replace these fixed belt brackets with pivoting cams. These belt brackets on the original design are fixed to the belts rigidly and are what translates the motion of the belts to the motion of the tray because the tray is connected to these belt brackets. With Lexmark's design it is impossible to move the tray manually because these brackets are fixed to the belts and the belts are fixed to the drivetrain. As a team, we targeted these belt brackets to be the parts we wanted to modify to allow the tray to move up and down on the belt when the user desires. In order to achieve this we designed a pivoting cam (Figure 8) to swing in and out from the belt so that the cam could either be: (1) pinching the belt into the fixed belt bracket or (2) swung away to allow the bracket assembly to move up and down on the belt. Option (1) is what is desired under normal motor operation because the cam is locked into the belt which locks the whole bracket and tray assembly to the belt which is connected to the drivetrain and motor. Option (2) is what is desired for manual operation because the bracket and tray assembly is separated from the belt, drivetrain, and motor which will allow the tray to be moved up and down by the user's hands.

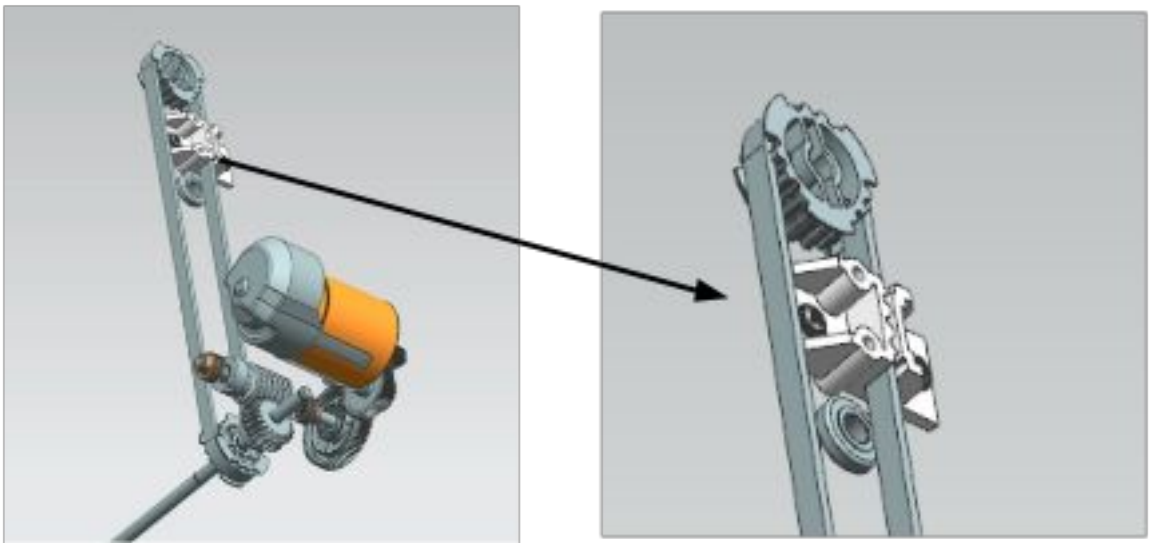

Figure 7. Belt Clip

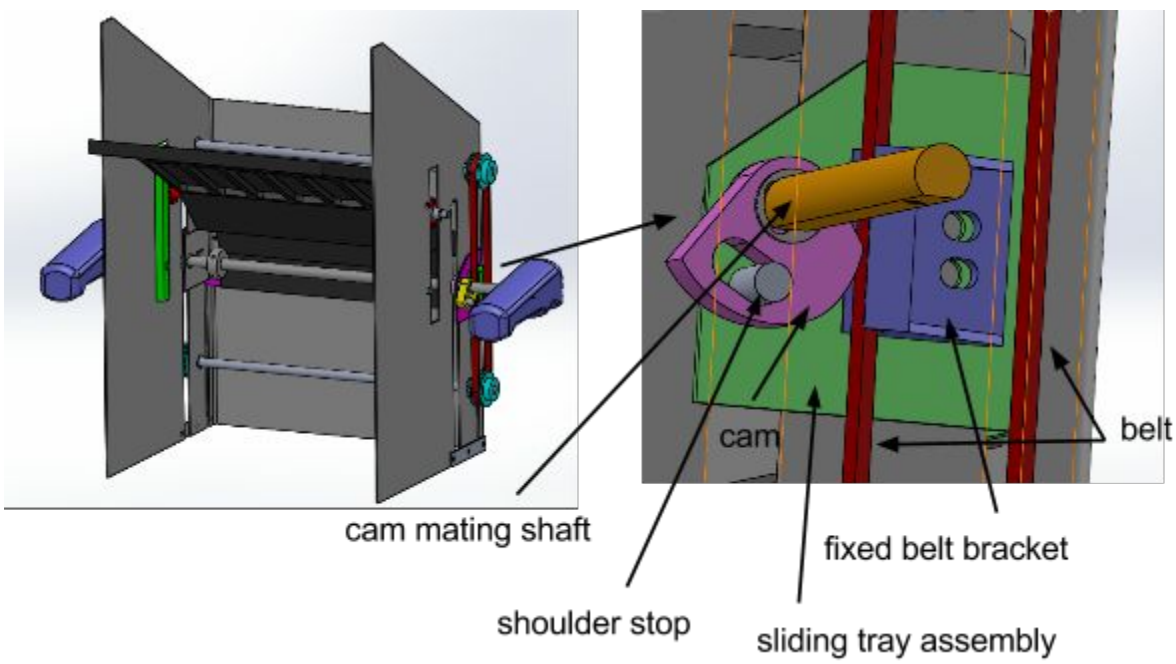

Figure 8. Cam/Belt/Fixed Belt Bracket

Now that we have an overall explanation of how, generally, the manual solution is intended to work and an introduction of the specific part names we have called our different parts, it is time to get into the heavy design work that was done to create our solution. Also, we began to consider important driving design criteria that we intended to achieve with our manual solution. First, we wanted our manual override to allow a safe, functional movement of the tray. Next, we wanted each of the two cams to be able to engaged and disengaged from the belt simultaneously. We also wanted to provide a solution that was very self explanatory and was intuitive for the user to

interact with. In order to properly demonstrate our design it was necessary to recreate a current Lexmark finisher so that we could show our design working on a real, working finisher.

To solve the question of how to mate the cam movement to engage and disengage the belt we had two main ideas on how to mate the two cams together. Our first idea was to use two separate cables to pull the cams. The cables would connect the cams to triggers that the user could pull with their index fingers. We ended up ditching this design because we want the cams to be engaged and disengaged simultaneously which would be nearly impossible with two separate triggers. After the ditching the cable idea, we thought it would be wise to attach the cams to a shaft so that they could be mated to each other and any motion of one cam would be matched by the other cam. We called this shaft the cam mating shaft because it mates the two cams.

Much design went into this design as we determined an appropriate thickness for the shaft and different features to include on the shaft. We chose a ⅜ " steel shaft to satisfy the deflection criteria. Free body diagram and calculations to find the shaft deflection can be seen in the appendix. Under full load (1000 sheets) and with heavy weight paper (30 lbs for 1000 sheets) the shaft deflection is only 0.063" for a ⅜ " steel shaft. We could have decreased this deflection even further if we chose a ½ " shaft, but considering that 0.063 " is a tolerable deflection, we chose a smaller cheaper shaft. We assumed a uniform circular cross section for calculations, which is not actually true because the ends of our shaft are D-shaped, but since we are just approximating the deflection it is not imperative that the deflection be exact. The approximation should be relatively accurate. The features on the shaft are shown in Figure 9. These features include: D-sections for handles and cams to provide rotations, C-clip grooves for C-clips to slide in to lock the assembly together axially, and flats for spring collars which will provide a surface for set screws to be screwed into which will lock the spring collars to the cam mating shaft.

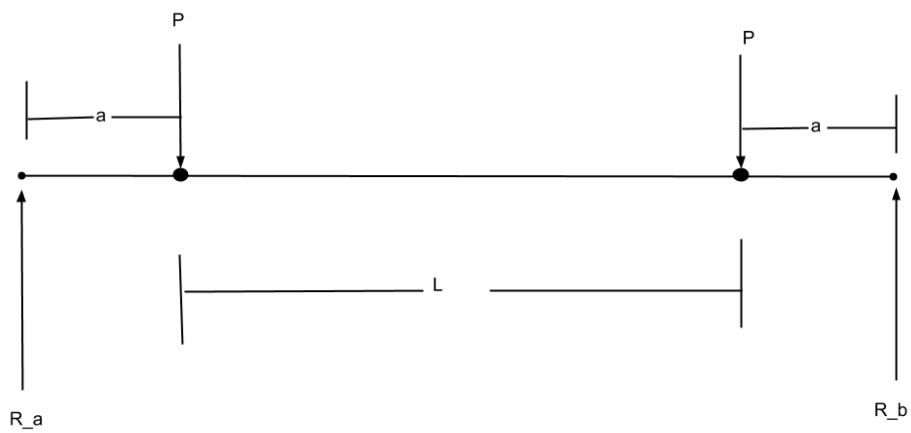

Figure 9. Cam Mating Shaft Free Body Diagram

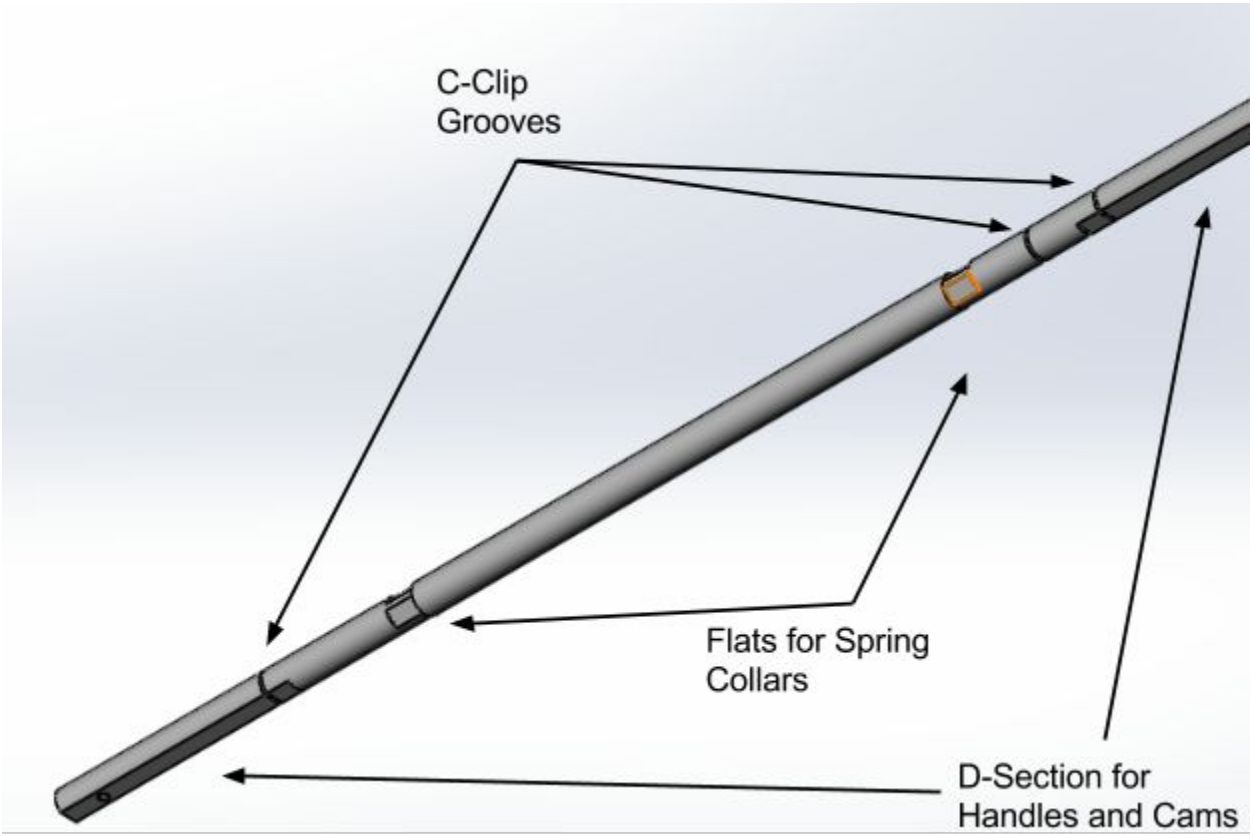

Figure 10. Cam Mating Shaft and features

Next step in designing the manual solution was designing handles for the user to grab. The purpose of these handles is to be the user interface between the rotation of a persons' hands and the rotation of the cams. The handles slide right onto the outside of the cam mating shaft on the d-section. First semester we thought we would initiate this shaft rotation with a fixed handle and squeezable trigger, but we moved away from this design in favor of the rotating handles because of its simplicity in design. In our current design, when a user rotates the handles this rotates the cam mating shaft which then rotates the attached cams. When designing the handles we wanted to design an ergonomic, comfortable design for the user to hold and make sure they are designed in a way that there is sufficient grip that the handles would not slip out of the user's hands when rotated. Also continuing with the whole theme of our solution we wanted the handles to be simple, intuitive, and elegant so it would provoke a user input.

Another way we made the handles more user-friendly was we made the default "locked" position at 30 degrees below horizontal and the unlocked position at 0 degrees horizontal. Figure 11 shows, visually, these two positions. Our intentions with these two positions were that when the user grabbed the handles at a 30 degree angle they would be inclined to flatten the handles to zero degrees horizontal as they "picked up" the load. The expectation here is that the user would feel most comfortable with handling the wait when the handles are horizontal in their hands, so naturally, they tend to turn the handles to 0 degrees horizontally as they embrace the load of the paper and tray.

Creating a handle that wouldn't slip out of the user's hand we figured we would add finger grooves for the users fingers to fit comfortably into that would provide added grip to the handle. We designed a first rotating handle design and 3D printed it out of plastic to see how it felt in our hand. We designed it to have rounded edges and four finger grooves around the bottom. After printing this handle and feeling it in our hand we were less than satisfied with how it felt. The finger grooves felt a bit excessive and tended to get in the way more than lock your fingers in. We began work on a second rotating handle design. This handle would only have one groove through the middle of the handle and a groove at the end to help "hook" the hand in and keep it from slipping off. We modeled this design to be similar to a pistol grip. Both rotational handle iterations as well as the trigger model proposed last semester is shown in Figure 12.

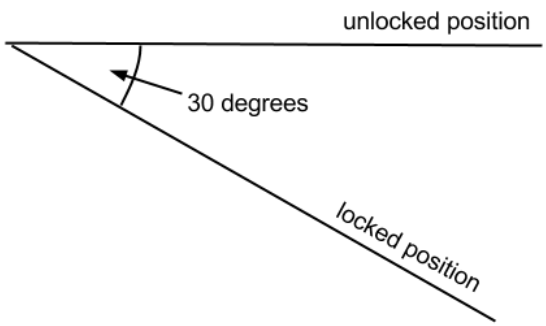

Figure 11. Handle position

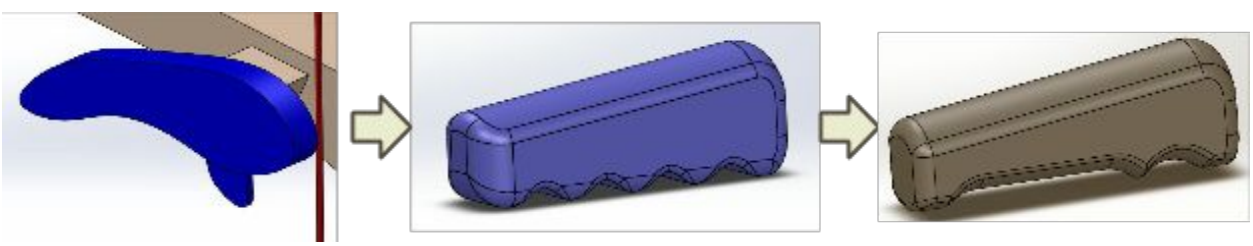

Figure 12. Handle Design Iterations

Belt Engage / Disengage Design

From the first semester of design work, the cam separated itself from other options for the purpose of engaging and disengaging the sliding tray assembly from the drive belts. The other options were limited in that they did not meet size constraints, were unreliable, or were over complicated. To further test the cam design, two other similar designs were put forth during the early stages of design this semester. While these designs are similar in function the the cam, the problems they solved were overshadowed by the problems they caused. In the following figure, Figure 13, one of the designs mentioned, the gear-pawl lock assembly allows rotation or no rotation of the shaft that the pulley and the belt is mated to.

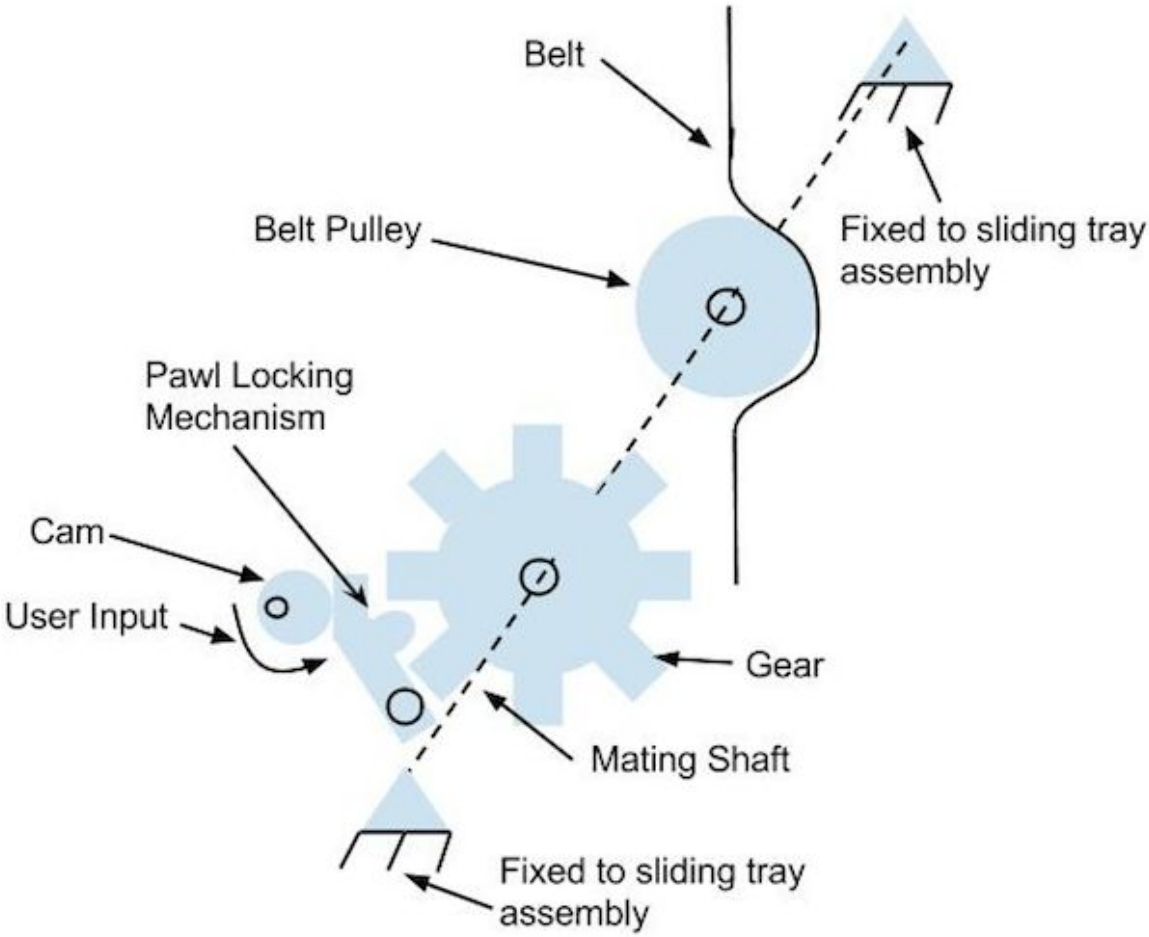

Figure 13. Gear-Pawl Lock/Unlock Assembly as previous design option.

In the above figure, Figure 13, notice that the belt is always mated to the belt pulley (no slip) and that the mating shaft fixes the gear to the belt pulley at all times. This allows the motion of the pulley to mimic that of the gear. If the pawl locking mechanism is engaged by the cam from the user rotational input, the gear cannot move, and, as a result, the motion of the belt is mimicked by the the sliding tray assembly, which supports the mating shaft and the whole assembly shown, as can be seen by the grounding points on the end of the mating shaft. While this design performed nicely theoretically as far as locking and unlocking motion of the sliding tray assembly to the belt motion, there are a few downsides to the above design design. With the cam, there is only the need for the addition of one shaft, whereas for the design in Figure 13 needs a minimum of five rotational parts, which becomes a bit bulky. Size is not necessarily an issue in the pawl design, but the cam design requires no adjustment or retrofitting to existing equipment, whereas this design would require much more. There were not many downsides to this design, but the main reason the cam design edged it out is because this design mimics the exact function of the cam design, just with more parts. Imagine the gear as fixed belt bracket and the pawl locking mechanism as a tooth on the belt. The cam as used in Figure 13 would perform the exact function as the cam in the cam lock actuated design.

Another previous design option to unlock and lock the motion of the belt to the motion of the sliding tray assembly would be the translating fixed belt bracket design as shown in the following figure, Figure 14. Notice That this is more similar to the cam design in that it relies on the belt to lock and unlock from the fixed belt bracket. Instead of a cam, though, there is a fixed bracket that purely translates, providing the normal force to engage the belt into the fixed belt bracket.

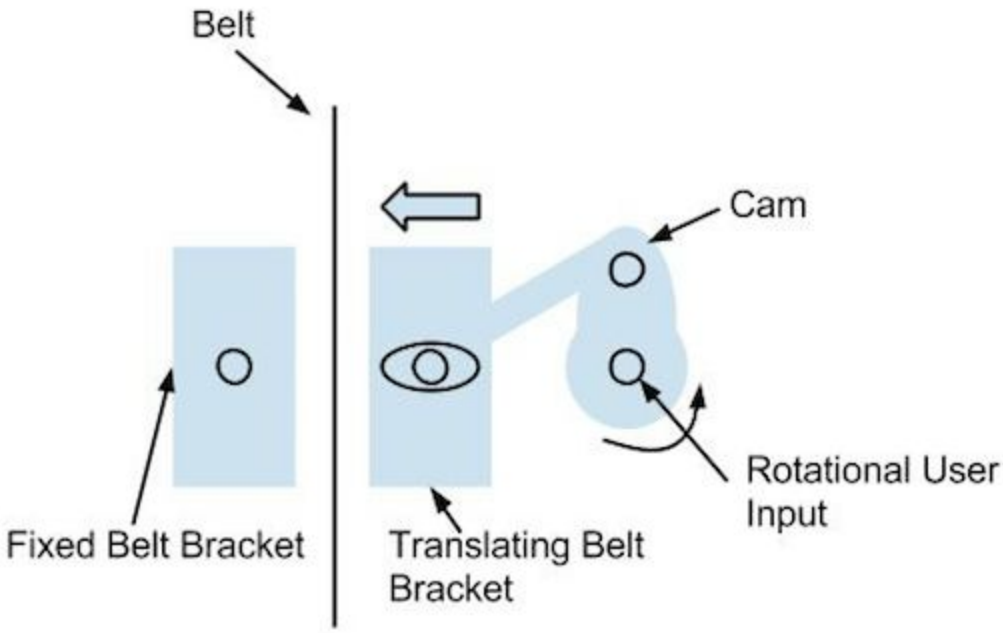

Figure 14. Translating belt bracket design as a previous design option

Ultimately though, this design over complicates what the cam already does. This translating bracket design arose because of the thought that pure translational motion into the belt would be necessary to prevent binding. The cam actuated locking design, though, performs the same function, with less parts. Because the cam only has to travel about 0.23 inches from the unlocked to locked position, it essentially performs as the linear translating design, but, without the complexity. The translating belt bracket design was beneficial in realizing that, for the belt to lock, only a linear, horizontal force is needed. The weight of the sliding tray assembly and its paper contents will be felt by the fixed belt bracket only, since the fixed belt bracket is designed to mate with the teeth on the belt. This means that the cam only needs to apply the normal force to engage the teeth and prevent them from sliding out. While the free body diagram revealed this mathematically, this help visualize it conceptually as to what was happening with the locking mechanism.

As was mentioned previously, the cam actuated belt locking mechanism continued to shine, despite criticisms and other design possibilities. It continued to be the simplest design, while still meeting the requirements of providing a locking normal force into a belt, from a rotational input. Once the cam was solidified as the design of choice, the specific design took place. There were three critical points that defined the design. First, was the need for a contact line instead of a contact surface to the belt. The main reason this requirement arose was to avoid binding from any friction between the belt and the cam. The second, was to incorporate the cam and stops to

provide two modes of operation: an unlocked position and a locked position. Keeping in mind that the goal if for the user to manually raise and lower the tray, the handles needed to be in a position that would allow the user to raise or lower the load easily. This is the unlocked position. The locked position is when the tray is being raised or lowered by the motor. This was accomplished by using a slot and shoulder, which provides two contact points for the shoulder to satisfy the two operating positions of the rotating assembly. The third was a way to fix the cam to the shaft, while still making it easy to assemble. Machining the cam in a D-shape was the easiest way to ensure a strong mating, with minimal effort. In the following figure, Figure 15, the cam actuated belt locking design is shown.

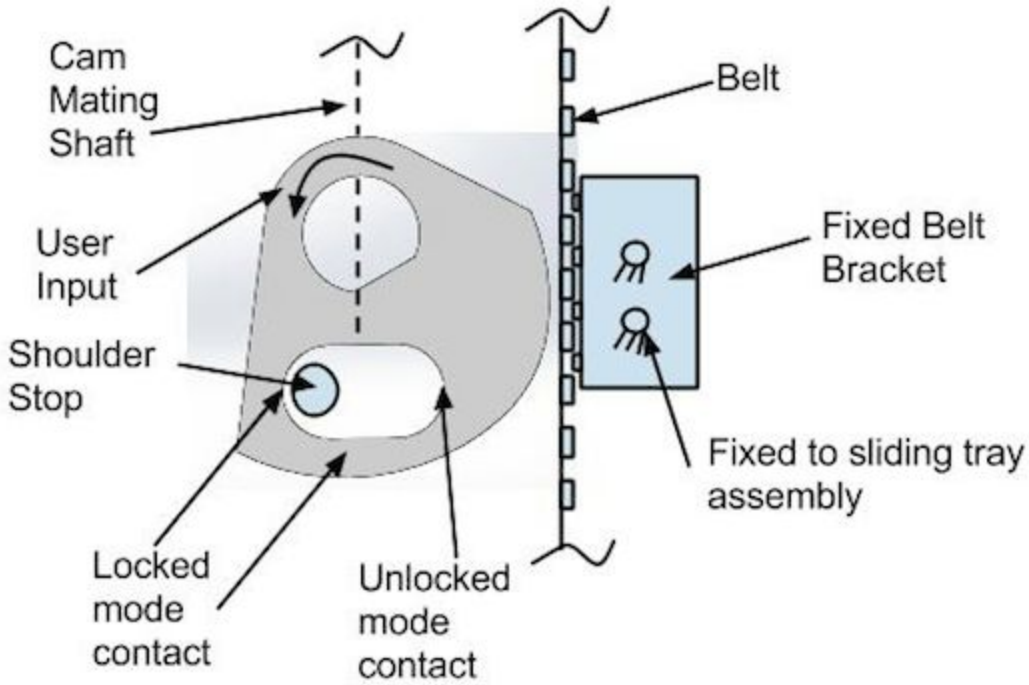

Figure 15. Cam actuated belt locking design as the chosen design.

It is important to note that this is the stopside cam. On the other side of the cam mating shaft, the cam is much more basic, since only one cam is needed to stop the rotation at the locked or unlocked position. In the following figure, Figure 16, the opposite mating cam is shown. Note that it has the same contact point at the belt to ensure both belts are engaged simultaneously. It also has the same D-shaped machining so it mates to the cam mating shaft.

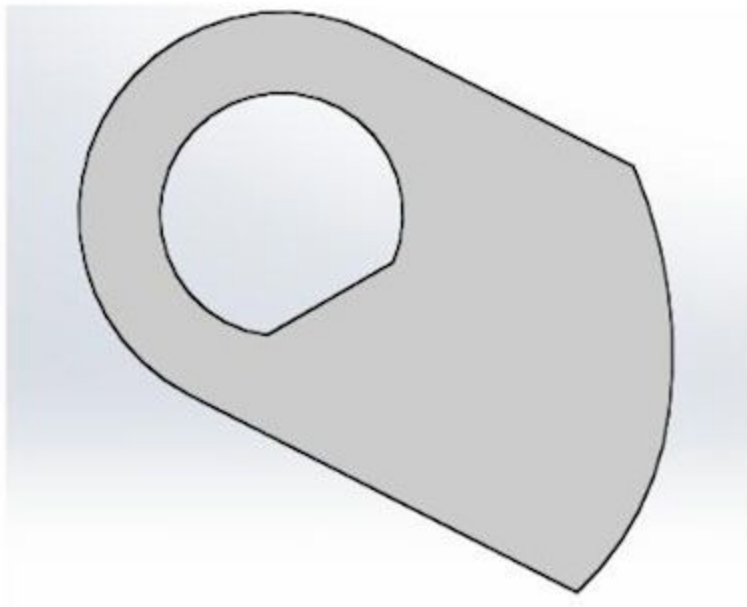

Figure 16. Mating cam, oppositely mated on far side of cam mating shaft.

Notice that the curve of the cams will minimize the contact area to minimize the chance of binding. This binding issue becomes further mitigated by the shoulder ensuring the cam cannot continue to deflect the belt until it becomes jammed. To ensure the cam contacts the belt at the right point, simple geometry was used to determine the dimensions of the cam. Reference the design package for the exact dimensions, which were designed in such a way that the cam contacts the belt when it has rotated 30 degrees. Since the handles start out at 30 degrees, and rotate till flat, this will make sure the handles are easy to use for the user. In order to determine how long it would take for the cams to engage and lock the mechanism should the user drop the load accidentally, calculations were done to approximate the time it would take for the cam to engage the belt to the fixed belt bracket and lock it to the belt. With this calculated time of about .02 seconds, the distance the tray drops was calculated to ensure the tray could not hurt the user. The tray will drop no more than about a tenth of an inch before it engages with the belt and is stopped. Reference the appendix, section 1, to verify the calculations. Reference the design package and the drawing for the cams to verify the geometries and tolerances.

Providing Default Locking Mode: Spring Design

With the shaft, the cams, and the handles designed, the mechanism needed a way to ensure that the cams locked the belt to the fixed belt bracket. The main design considerations that arose were: satisfy the minimum force required to engage the belt to the fixed belt bracket, provide a good handle feel for the user, and consider space and mechanical effects of the different spring geometries (torsional, linear, etc). To satisfy the requirement for the cam to supply the minimum normal force required to engage the belt, free body diagrams were analyzed for the cam, the belt, and the fixed belt bracket. In the following figure, Figure 17, the free body diagram of the cam is shown:

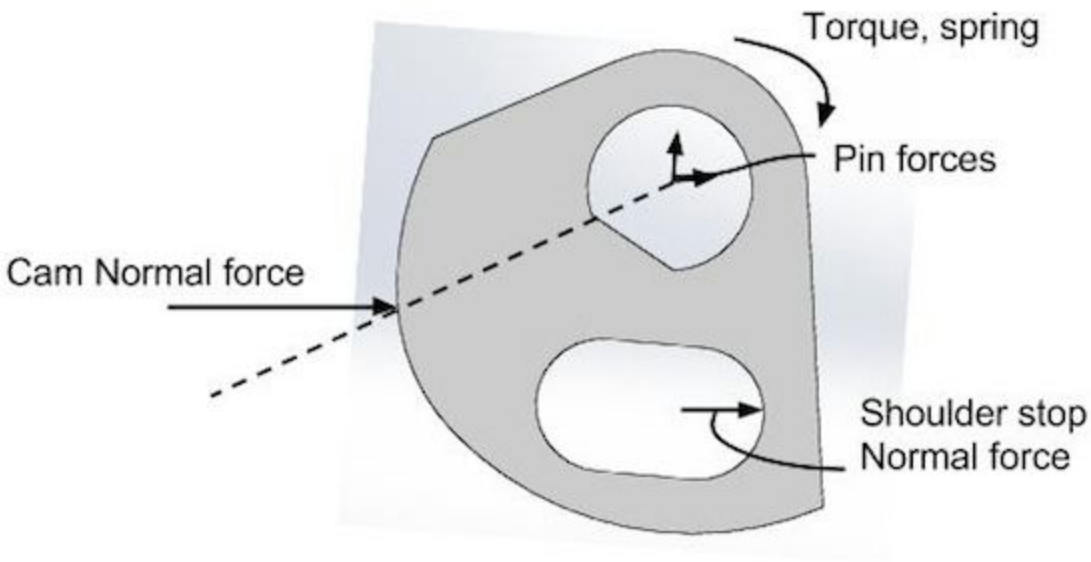

Figure 17. Free body of stop side cam in locked position, with shoulder stop engaged.

Note that the cam normal force is the force that is critical in engaging the belt to the fixed belt bracket, and must be calculated to ensure that the torque from the spring is sufficient. To calculate this minimum normal force required, the free body diagrams of the belt and the fixed belt bracket are shown in the following figure, Figure 18. Notice that the force between the fixed belt bracket to the belt is assumed to occur only through friction of one tooth. In the worst case scenario, only one tooth would contact, so this assumption guarantees that the normal force is sufficient because in actuality, a few teeth are engaged.

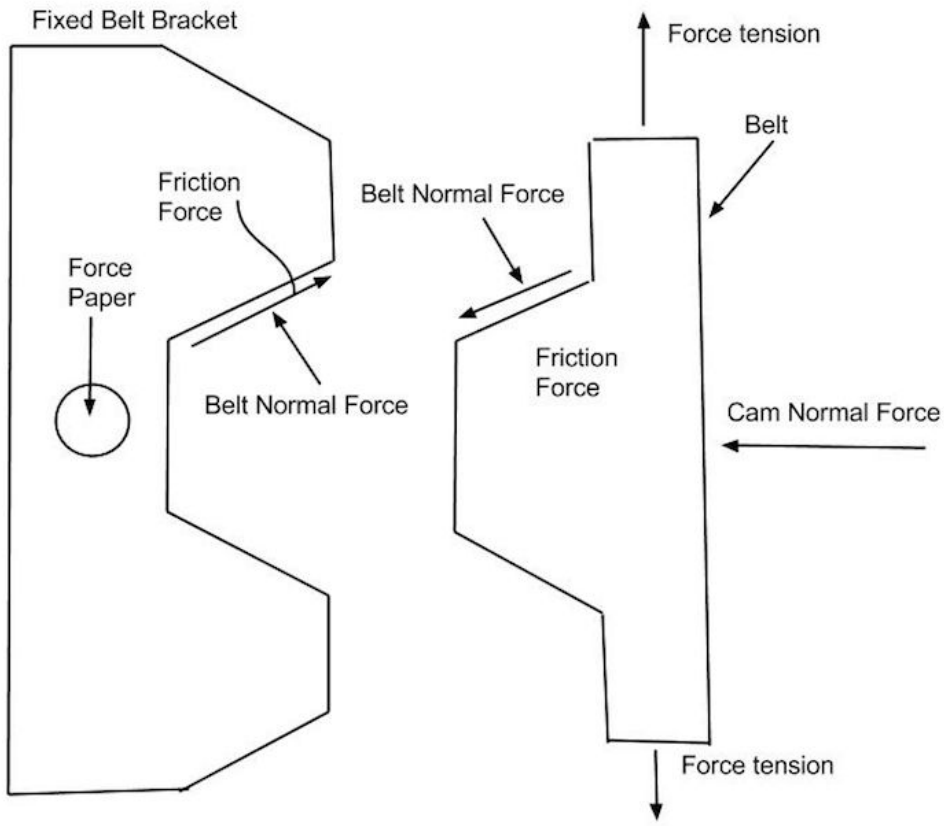

Figure 18. Belt and fixed belt bracket free body diagram to determine minimum cam force.

After all the sum of forces and calculations, the normal force required to engage the belt is about .41lb, which after summing torques about the cam mating shaft, translates to a spring torque required of 0.12lb-in, which is very low. Since the spring design must also account for handle feel to the user (it should not be able to be lifted with one finger), it turns out that the handle feel dominates the spring design. After a few experiments and research on wrist strength, it was determined that a good hand force would be about 2lb. With this handle feel in mind, the spring torque required would be closer to about 5lb-in, which would more than satisfy the minimum normal force required. Reference the appendix, part 2 for the equations and calculations used to calculate the minimum cam normal force required. Reference the bill of materials for the spring chosen.

In order to attach the spring to the shaft, a collar was designed with set screws to fix it to the shaft. The spring will then be inserted into a machined hole on the collar so that when the spring is pre torqued, it applies the desired torque to the cam mating shaft. The opposite end of the collar end of the spring is fixed to the spring bracket, which is fixed to the sliding tray assembly, which acts as a ground to prohibit the rotation and act as the fixed end. Note that the spring constant from the manufacturer was .01657 in-lb/degreee, and so, to obtain a comfortable handle feel, the spring is pre deflected about 330 degrees to give a torque of about 5.5lb.

Preventing Binding: Lexmark Rack and Pinion Mated Design

In the manual mode of operation as designed by this project, it is critical that the sliding tray assembly does not bind when it is disengaged from the drive belts and is free to translate as the user desires. Since the user could not possibly apply the exact same force to both handles, binding could occur. Researching and understanding the existing Lexmark tray elevator system was necessary to determine if it was sufficient for our design. In the following figure, Figure 19, the design as replicated in the manual release design is shown. Note that the red pinions are mated to the shaft, which forces both sides to rise simultaneously.

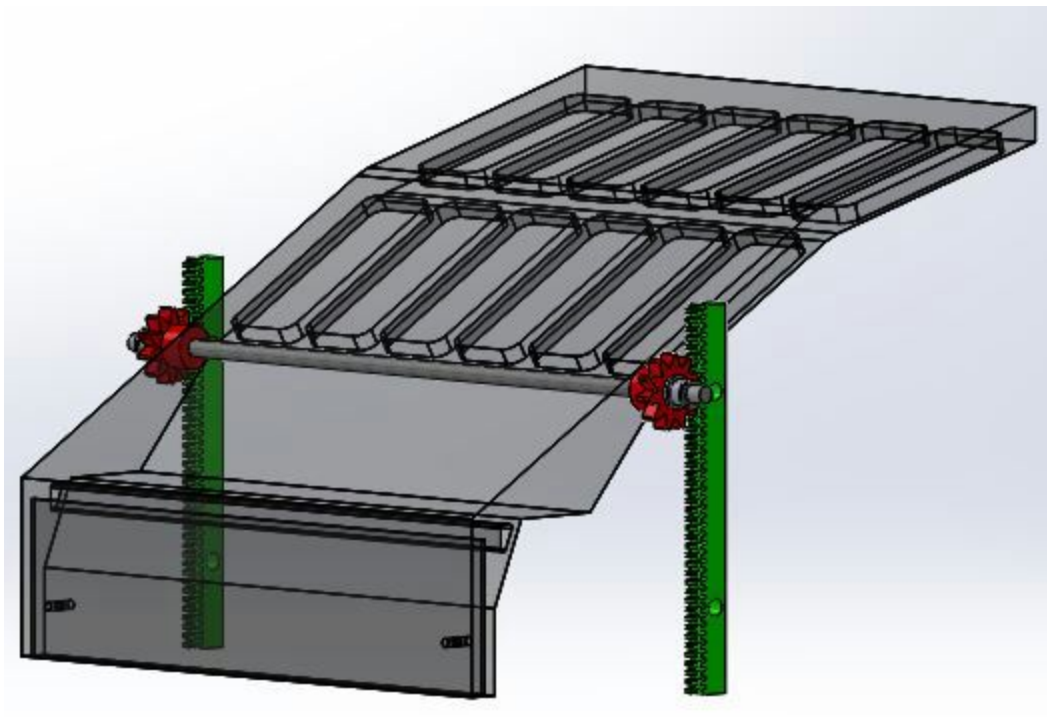

Figure 19. Lexmark replicated anti-bind design for demonstration.

Also of note, is that on the sliding frame, which is attached to the end of the tray with the slot as seen above in Figure 19, washers and bushings were used to help align and direct the motion of the sliding tray assembly with the base frame slots.

Conclusion / Recommendations

We are confident that the belt engage/disengage solution that finally came to fruition met the design criteria that Lexmark provided us with as well as the criteria that we as a team valued for our solution. We sought a solution that is intuitive and simple for the user to operate. We believe that our solution meets this objective as it only requires one action for the user to operate the mechanism and disengage the tray from the belt, allowing it to freely translate. Beyond that, the sensing and programmed portion of the device makes sure that the tray is returned to its appropriate position even if the user neglects to try to return it. This ensures that the printer maintains normal operating function, which was one of Lexmark's criteria, while not depending on the user to ensure that this happens. Our device is self-correcting if neglected by the user. Our design addresses the paper replacement issue that causes problems by the tray re-adjusting before users return unwanted print jobs to the stack. It allows for the user to lower the tray to a position where they can easily access the output stack and gives them ample time to replace any papers that are not theirs before the printer resumes normal function.

It was our goal to produce a solution that delighted 100% of users 95% of the time. We realize that it will not always be a perfect solution for all people all the time, but we wanted those times when our device was less than ideal to be few and far between. We believe that the 5% of cases when our design may not be ideal would likely be caused by a delay time that is not accurately dialed in. A delay time too short would cause the tray to move before the user is finished, which defeats the point of our device entirely. A delay time too long would result in the printer being inoperational longer than it needs to be, which would violate or at least push the boundaries of our goal for the printer to resume normal function in a timely manner.

From the information that we received from Lexmark, we understood that our design was to be considered in a prototype printer that is not yet in production yet. Because this printer does not exist yet, we based our design around existing Lexmark hardware, and as a result, we believe that our design could be retrofitted be operational in some existing Lexmark printers.

Even with all the upside to our design, there are certainly areas where it could be improved upon, or where alternatives could be even better. One of the main critiques of our design is that there is certainly not one delay time that will satisfy all users, so further development of a variable delay time could be investigated. Perhaps a good solution to this issue would be to have a delay time that is determined by artificial intelligence (AI) settings within the device itself. Another potential issue with our device is the operational limitations potentially caused by placing the printer in a corner or against a wall. Because our device is designed to be operated by using both handles, putting the printer against a wall as people often do could cause accessibility issues and make it more difficult to use our device if only using one handle. The solution to this would be to develop another design that only required access to one side of the printer or could easily be operated by one hand. An alternative solution that could solve this issue entirely would be the implementation of motor control buttons rather than the purely mechanical, user-operated handles. Buttons would eliminate any sort of space constraints and would be an even easier form of user input than our handles and manually lowering the tray. Perhaps the best overall solution would be a purely software solution in which additional sensing would allow the printer to detect when paper had been removed from the tray, initiating a delay time before readjusting its position to correct the drop height.

We all agree that this project has been one of the most educational and certainly the most practical educational experience of our college careers. Over the course of the past semester and year we have learned a number of important lessons about the design process. This project gave us a much better understanding for all that goes into design, and what it requires to take a design from a concept and an idea to a tangible, operational device.

We probably learned the most when we were going through the process of ordering our parts for manufacture. We spent a lot of time not just learning how to create technical drawings, but how to make them the right way. We learned that we had to put ourselves in the machinist's shoes, and ensure that our drawings included all critical dimensions while eliminating extraneous ones in order to make our drawings clean, logical, and easy to read. As part of making our drawings we also had to pay special attention to tolerancing to ensure that our parts would all fit as we desired. It was important for us to determine not just the dimensions for our parts, but how much error was acceptable as well as realistic to expect during the manufacturing process. Our design required the use of a number of manufacturing processes to include drilling, milling, turning, laser cutting, and 3D printing, utilizing both CNC equipment and human machinists in the process. As a result it was important to understand how these processes worked and what their limitations were.

Probably the most important takeaway that we had from learning about design is that simple designs create elegant, reliable solutions. Multiple times over the course of this past year we came up with radical, complex designs that seemed promising initially, but more and more issues continued to be raised as we developed them. One such example was our idea to use a cable system to actuate the cams. It seemed practical enough and space efficient, however, we soon discovered that timing was going to be a major issue as we could not guarantee that both cams would engage and disengage simultaneously. Eventually we came to the much simpler design of having the handles and cams all mated to the same shaft, ensuring that they would all rotate simultaneously and uniformly. This design proved to be much more basic and simple, yet infinitely more reliable easier to implement. Multiple times we simplified our design and each time our device became more reliable and functional as our simpler designs eliminated many problems and complications that we experienced.

Appendix

I. Cam actuated belt lock time and resulting sliding tray drop distance calculations:

$$\Sigma\tau = I\alpha$$
$$Where\ \tau\ is\ torque\ of\ spring\ = 2.5\ in \cdot lbs$$
$$I\ = \frac{1}{2}mr^2 = 3.677 * 10^{-4} in^4$$
$$\alpha = 6800\frac{rad}{s\text{^}2} = 195000\frac{deg}{s\text{^}2}$$
$$\theta = \omega t + \frac{1}{2}\alpha t^2$$
$$Where\ \theta = 30°, \omega = 0, so\ t = \ .02\ seconds\ till\ engage$$
$$y = vt + \frac{1}{2}at^2$$
$$Where\ v = 0, a = \frac{32.2ft}{s^2}, t = \ .02, so\ y$$
$$= \ .08\ inches\ (distance\ sliding\ tray\ assembly\ drops)$$

II. Minimum cam normal force required and corresponding spring torque required calculations:

$$For\ bracket: \Sigma F_y = 0 = -force_{paper} + \ force_{friction} \sin(25) + force_{belt\ normal} \sin\ (65)$$
$$Where\ force_{paper} = 15lb, force_{friction} = \ \mu\ force_{belt\ normal}, and\ \mu$$
$$= .5, so\ force_{belt\ normal} = 13.4lb$$

$$For\ belt: \Sigma F_x = 0 = -force_{cam\ normal} - \ force_{friction} \cos\ (25) + force_{belt\ normal} \cos\ (65)$$
$$Where\ force_{friction} = \ \mu\ force_{belt\ normal}, \mu = .5, and\ force_{belt\ normal}$$
$$= 13.4lb, so\ force_{cam\ normal} = .41lb$$

$$For\ mating\ shaft\ and\ cam\ assembly: \Sigma\tau = 0 = \ -force_{cam\ normal}(.3) + \tau_{spring}$$
$$Where\ force_{cam\ normal} = .41lb, so\ \tau_{spring} = \ .12lb \cdot in$$

III. Cam Mating Shaft Deflection Calculations under full load

$$y_{max} = \frac{Pa}{24EI}[3L^2 - 4a^2]$$

$$E = 30.0 \text{ x } 10^6 \text{ psi}$$

For 1000 sheets: $P = \frac{F_{tray}}{2} = 15$ lbs

Model as full cross section ◯ across shaft

$$I_{about\ center} = \frac{\pi}{4} r^4$$

$$y_{max} = \frac{(15lbf)(3.25in)[3(17.72)^2 - 4(3.25)^2]}{24(30.0x10^6)\frac{\pi}{4}(\frac{3}{8} * \frac{1}{2})^4}$$

$$y_{max} = 0.063 \text{ in}$$