On Information Content in Patterns*

HARLAN D. MILLS

IBM, Bethesda, Maryland 20034

Received November 28, 1979; accepted January 11, 1980

When a planar, k-colored pattern is sampled using a square grid, assigning a single color to each grid square, the area miscolored can be made arbitrarily small by reducing the grid size, but more information is then required to specify the pattern. This paper gives bounds on the required information as functions of the pattern area, fraction miscolored, and border length, under various assumptions about the shapes of the borders between colors.

1. INTRODUCTION

Consider a two-dimensional *two-color* image or pattern of area A with boundary between the colors of length b. This boundary may consist of a set (possibly infinite) of arcs each continuous in the interior of the image. For example, a bullseye pattern of an infinite set of rings of outer radii $1, 2, \ldots, 2^{-k}, \ldots$ will have a boundary of finite length.

Such a pattern can be approximated over a fixed grid of squares covering the image, each square of the same color. This approximation represents the pattern with a certain amount of error and in turn requires a certain information content I to describe it. A subarea of a grid square which is the wrong color will be called *miscolored*. Intuitively, it appears that finer grids can reduce the area E of a pattern which is miscolored, and this is borne out below. But as the size of grid square is decreased, more and more information is required to describe the approximation.

Let $\varepsilon > 0$ be an upper bound on the fraction of the area of the pattern which may be miscolored. Then it will be seen that a grid size can be picked such that

$$E \leq A\varepsilon \tag{1}$$

and

$$I \leq A\beta^2\varphi(\varepsilon), \tag{2}$$

where the function $\varphi(\varepsilon)$ is defined below and

$$\beta = b/A. \tag{3}$$

In addition, the information content per grid square, H (the data compaction possible over coding each such grid square with its color), satisfies the inequality

$$H \leq 4\varepsilon^2\varphi(\varepsilon). \tag{4}$$

*This paper was written in 1969. The author thanks Professor A. Rosenfeld for encouraging him to submit it for publication.

0146-664X/80/110183-20$02.00/0

Copyright © 1980 by Academic Press, Inc.
All rights of reproduction in any form reserved.

For patterns which are *grid-polygonal* (Section 2) in a grid structure—i.e., defined by a boundary which consists of at most one line segment per grid square—the function $\varphi(\varepsilon) = \varphi_\rho(\varepsilon)$ can be taken as

$$\varphi_\rho(\varepsilon) = \frac{1}{2\varepsilon} \ln_2 \frac{e}{2\varepsilon}, \qquad e = 2.71\cdots . \tag{5}$$

For patterns which have positive lower bounds on the curvature of the boundary, and whose boundary is *separable*—i.e., (1) curvature at any point of the boundary exists and is at least $\rho > 0$; (2) there exist open neighborhoods around each point of the boundary such that the boundary is connected in that neighborhood—the function $\varphi(\epsilon)$ can be taken asymptotic to $\varphi_\rho(\varepsilon)$. Notice the bullseye with an infinite set of rings satisfies neither of these conditions. In any case, however, when b is finite, $\varphi(\varepsilon)$ can be taken as

$$\varphi(\varepsilon) = \frac{1}{\sqrt{\pi\varepsilon}} \ln_2 \frac{\sqrt{\pi\varepsilon}}{4\varepsilon}. \tag{6}$$

For practical purposes the conditions of positive radius of curvature and boundary separability seem rather mild qualifications so that the *sharper* asymptotic bound provided by (5) appears applicable in most situations.

For random grid-polygonal patterns—i.e., grid-polygonal patterns whose boundary line segments occur in random orientation in grid squares, even sharper bounds are possible with a function $\varphi(\varepsilon) = \varphi_R(\varepsilon)$ which can be taken as

$$\varphi_R(\varepsilon) = \frac{0.39}{\varepsilon} \ln_2 \frac{1}{0.59\varepsilon}. \tag{7}$$

It seems of interest to note that, aside from the area of the pattern, whose role could be expected, the only property of a pattern involved in these bounds on the information content of its approximations is the length of the boundary between the colors. Since

$$A\beta^2 = b^2/A$$

reference to (2) shows that bounds on the information content of image approximations covering the same area A depend only on the square of their boundary lengths b.

For multicolored patterns which are grid-polygonal in N colors, the bounds (1) and (2) hold for $\varphi_N(\varepsilon)$ such that

$$\varphi_N(\varepsilon) = \frac{1}{2\varepsilon} \ln_2 \frac{e(N-1)}{2\varepsilon}, \tag{7a}$$

which reduces to (5) when $N = 2$.

When the patterns in question are made up of grid squares too small for the eye to observe as individuals, then the bound ε on miscolored area can be reinterpreted as the ratio of edge length of these grid squares to the edge length of the smallest square the eye can resolve.

2. GRID-POLYGONAL PATTERNS

As already noted, a grid-polygonal pattern is defined to be a pattern such that, in some grid, its boundary consists of at most one line segment per grid square. For simplicity, suppose the original pattern is contained in a square of edge length w, $w^2 = A$, as in Fig. 1a.

Consider a fixed tour of all grid squares which proceeds always from one square to an adjacent square—for example, in Fig. 1b, divide the initial square into $n = w/x$ rows of n squares each, and proceed left to right through the top row,

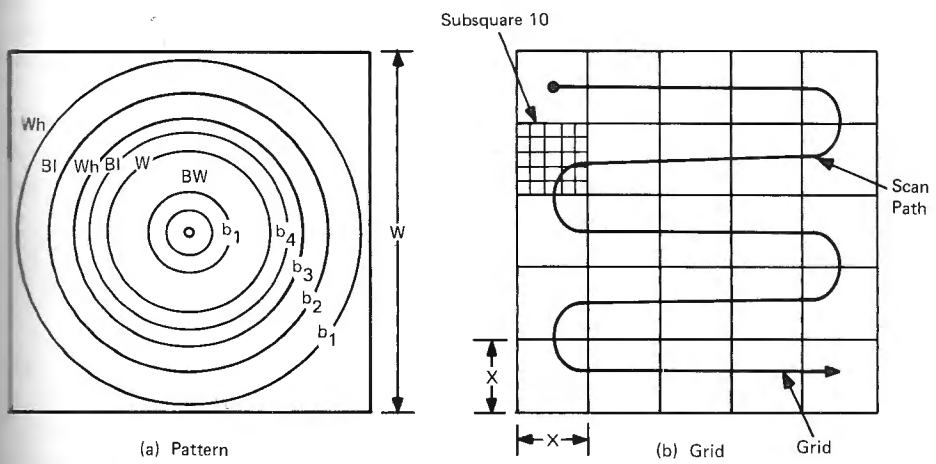

Area $A = W^2$

Boundary $b = \sum_{i=1}^{n} b_i$

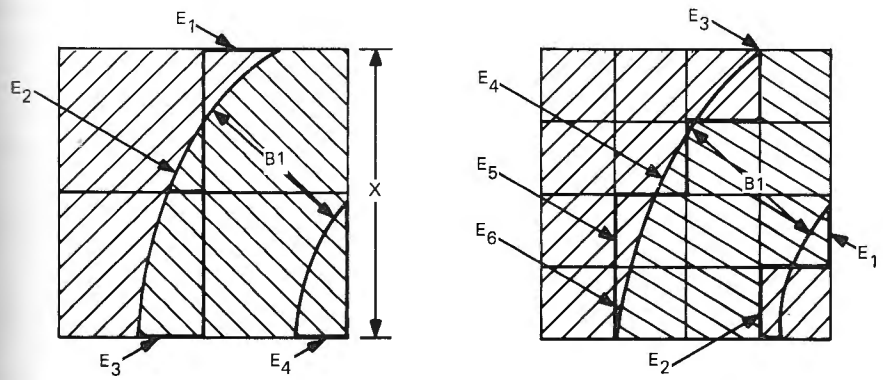

Miscolored Area of Subsquare 10 as a Function of Grid Size

$$E_x = \sum_{i=1}^{m} E_i$$



FIGURE 1

down one square, then right to left through the next row, down one square, then left to right, etc. Then, an approximate image is given by a sequence of binary digits representing the color of each approximating square. An alternate way of describing this two-color information is to follow the first binary digit (the color of the first subsquare) by a sequence of binary digits each of which defines the absence, 0, or presence, 1, of a change in color from the preceding square. This latter sequence will be called the derivative subsequence (of $n^2 - 1$ 0's and 1's) which, with the initial binary digit (the "initial condition"), determines the original sequence. Specifying the initial condition for the derivative subsequence corresponds to specifying the "positive" or "negative" of a given pattern. Note that the coding of subsquare color does not account for correlations between subsquare colors. Hence the information content bound to be derived is based only on the first-order statistics of boundaries occurring in the image.

The derivative subsequence is of interest because, as the grid size x is decreased, the relative proportion of changes (1's) will decrease as well. The relative scarcity of such 1's will then permit more efficient coding over the simple sequence of 0's and 1's which make up the derivative subsequence.

There are two key bounds for what follows, each as a function of grid size x and boundary length b, for miscolored area, say E_x, as shown in Fig. 1c, and for the number of 1's in the derivative subsequence, say N_x. They are

$$E_x \leq \tfrac{1}{2}bx, \tag{8}$$

$$N_x \leq b/x. \tag{9}$$

In order to see that (8) is valid, consider in any grid sequence, a single boundary line, as in Fig. 2. There are two cases shown, depending on whether the boundary line intersects adjacent sides of the square or not. In each case, consider a square with edge length x, intersected by a line segment of the boundary of length y, and defining a miscolored area Z. In either case, by definition, the area Z is at most half the area of the square, x^2. In case (a), the sides of the triangle making up Z are $y \cos\theta, y \sin\theta$, where θ is one of the acute angles of the triangle. Thus

$$Z = \frac{y^2}{2} \cos\theta \sin\theta, \qquad 0 \leq y\cos\theta \leq x, \qquad 0 \leq y \sin\theta \leq x,$$

which can be reformulated as

$$Z < \tfrac{1}{2}yx \sin\theta \leq \tfrac{1}{2}yx \tag{10a}$$

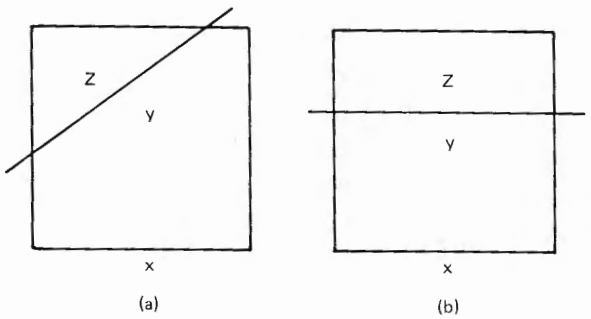

FIGURE 2.

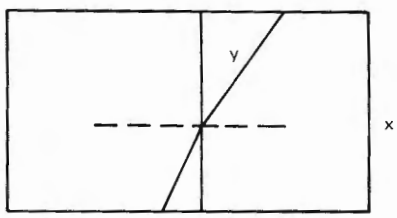

FIGURE 3.

In case (b), $y \geq x$, and therefore

$$Z < \tfrac{1}{2}x^2 \leq \tfrac{1}{2}yx. \tag{10b}$$

That is, in each case (10a) and (10b) the inequality

$$Z \leq \tfrac{1}{2}yx$$

holds. Consider this inequality over all grid squares intersected by the boundary, and sum both sides. The sum of the Z is E_x, while the sum of the y is the total length of boundary in the image, b. Therefore

$$E_x \leq \tfrac{1}{2}bx$$

as stated in (8).

Next, to see that (9) is valid, consider, as shown in Fig. 3, a pair of adjacent squares which produces a 1 in the derivative subsequence. Then, the (one or two) boundary line segments of total length y must be situated so that at least half the left square is to the left of the segments and at least half the right square is to the right of the segments; i.e., the segments must separate the centers of the two squares—thus intersect the line joining the centers. Any segments intersecting the line joining the centers of these squares must be of length at least x; i.e.,

$$x \leq y.$$

Summing this inequality over all 1's in the derivative subsequence provides xN_x on the left side, and a fraction θ of the total boundary contained in such pairs of grid squares on the right; thus

$$xN_x \leq \theta b, \qquad 0 < \theta \leq 1,$$

and

$$N_x \leq \frac{b}{x}$$

as stated in (9).

Let p_x be the fraction of 1's in the derivative subsequence. Since there are $n^2 - 1 \sim (w/x)^2$ total binary digits and N_x 1's, (9) shows that

$$p_x = \frac{N_x}{n^2 - 1} \sim \frac{N_x}{(w/x)^2} \leq \frac{b/x}{(w/x)^2} = \frac{bx}{w^2}. \tag{11}$$

When x is small p_x is also small.

According to Shannon and Weaver [1], a sequence of binary digits with frequencies $p, 1-p$ for the two-digit values can be encoded in a new sequence such that each digit of the original sequence requires on the average

$$H = p \ln_2 p - (1-p)\ln_2(1-p) \tag{12}$$

bits of information. The value $H, 0 \le H \le 1$ when $0 \le p \le 1$, can also be viewed as the compaction possible due to the frequency pattern of the digit values. When $p = \frac{1}{2}, H = 1$ and no compaction is possible (from frequency considerations); as $p \to 0$ or 1, $H \to 0$—as one of the digit values becomes rare, then H becomes small. This is precisely the case for the derivative subsequence as x is decreased.

H can be bounded by a simpler expression, which can be obtained by expanding the right-hand term of H in (12), $(1-p)\ln_2(1-p)$, as

$$\begin{aligned}(1-p)\ln_2(1-p) &= (1-p)\ln(1-p)\ln_2 e \\ &= (1-p)\left(-p - \tfrac{1}{2}p^2 - \tfrac{1}{3}p^3 - \dots\right)\ln_2 e \\ &= -p\left(1 - \frac{1}{1\cdot 2}p - \frac{1}{2\cdot 3}p^2 - \dots\right)\ln_2 e,\end{aligned}$$

whence (see also Shannon and Weaver [1, p. 33])

$$H \le p(-\ln_2 p + \ln_2 e) = p \ln_2 \frac{e}{p}. \tag{13}$$

Using the bound for p_x in (11), then

$$H_x \le p_x \ln_2 \frac{e}{p_x} \le \frac{bx}{w^2} \ln_2 \frac{ew^2}{bx} \tag{14}$$

and the expected number of encoded bits, I_x, will be bounded by

$$I_x = \left(\frac{w}{x}\right)^2 H_x \le \frac{b}{x} \ln_2 \frac{ew^2}{bx}. \tag{15}$$

Next, recall in (8) that the miscolored area E_x is bounded, and the fraction ϵ_x of area miscolored will be bounded by

$$\epsilon_x = \frac{E_x}{w^2} \le \frac{1}{2}\frac{bx}{w^2}. \tag{16}$$

Define a bound $\epsilon > 0$ by the relation

$$\epsilon = \frac{1}{2}\frac{bx}{w^2}. \tag{17}$$

Hence, by definition

$$E_x \le A\epsilon \tag{18}$$

and a grid size is determined as

$$x = \frac{2w^2\varepsilon}{b} = \frac{2A\varepsilon}{b}. \tag{19}$$

For this value of x as determined by ε, the bounds for H_x and I_x can be evaluated, and become

$$H \leq 2\varepsilon \ln_2 \frac{e}{2\varepsilon}, \tag{20}$$

$$I \leq \frac{b^2}{2A\varepsilon} \ln_2 \frac{e}{2\varepsilon}. \tag{21}$$

The bound of (21) is that of (2) using (3) and (5) and (20) is that of (4).

3. RANDOM GRID-POLYGONAL PATTERNS

If a pattern is regarded as a random pattern, with boundary line segments, as hypothesized above, randomly located on grid squares, the bounds for E_x and N_x of (8) and (9) can be replaced by statistical estimates instead. More precisely, consider a grid square whose center is a random uniformly distributed distance from a boundary line, and whose axis of scan (line through adjacent centers) is oriented at a uniformly distributed angle with the boundary line. Then, conditional on the subsquare intersecting the boundary line, three quantities of interest can be computed.

1. The expected length of the boundary line segment in the grid square.
2. The probability the scan axis intersects the boundary line segment.
3. The expected value of the smaller area of the subsquare defined by the boundary line.

The ratio of result 2 to result 1 gives the expected number of scan axis crossings per unit boundary length, and N_x is equal to the total number of scan axis crossings by the argument used to bound N_x above. The ratio of result 3 to result 1 gives the expected area miscolored per unit boundary length.

These values are worked out in the Appendix providing the results

$$\bar{E}_x = 0.495\, bx, \tag{22}$$

$$\bar{N}_x = \frac{0.787\, b}{x}. \tag{23}$$

When these estimates are used, new bounds $\bar{H}_x$ and $\bar{I}_x$ become

$$\bar{H}_x = \frac{0.787\, bx}{w^2} \ln_2 \frac{ew^2}{0.787\, bx}, \tag{24}$$

$$\bar{I}_x = \frac{0.787\, b}{x} \ln_2 \frac{ew^2}{0.787\, bx} \tag{25}$$

and finally in terms of bound ε,

$$\varepsilon = 0.495\frac{bx}{w^2} \tag{26}$$

and new bounds for $\bar{H}, \bar{I}$ are

$$\bar{H} = 1.6\varepsilon \ln_2 \frac{1}{0.59\varepsilon}, \tag{27}$$

$$\bar{I} = \frac{b^2}{A}\left(\frac{0.39}{\varepsilon} \ln_2 \frac{1}{0.59\varepsilon}\right), \tag{28}$$

which replace those of (4) and (2) using $\varphi_R(\varepsilon)$ given in (7).

4. GRID-POLYGONAL APPROXIMATING PATTERNS

Given a pattern whose boundary consists of a finite number of line segments, there will exist a grid size $x > 0$ such that the pattern is grid-polygonal, and the foregoing bounds apply for that grid. The number of line segments must be finite however, as the following polygonal pattern with *no* grid-polygonal representation shows. Consider a pattern of concentric squares, of edges $1, \frac{1}{2}, \frac{1}{4}, \ldots, 2^{-k}, \ldots$, every other "square ring" being of the same color. The pattern is polygonal, but no grid size $x > 0$ exists for which it is grid-polygonal.

Given a pattern whose boundary satisfies the conditions of positive radius of curvature and separability, there will exist a grid size $x > 0$ which permits grid-polygonal approximations of the image with bounded errors. First, using the separability condition, choose a grid size $\bar{x} > 0$ such that the boundary is connected in each grid square—i.e., consists of a single curve. Then define an approximating grid-polygonal pattern by connecting, in each grid square the boundary curve endings on the edges of the square by a line segment. Next, for any $x < \bar{x}, x > 0$, note that the maximum miscolored area per unit boundary of the grid-polygonal approximation is, as shown in Fig. 4, the area between the circumference of a circle of radius ρ and a secant of length $\sqrt{2}\ x$. In Fig. 4, this area is contained in the triangle formed by tangent lines at the corners of the grid square and the secant line. The area of this triangle is its base—the boundary line segment—times half its height, so the maximum error per unit of boundary length is

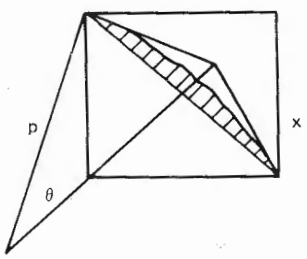

FIGURE 4.

half its height, i.e., total error ε_x is bounded by

$$\varepsilon_x \leq \frac{b}{2}(\rho - \rho\cos\theta), \tag{29}$$

where

$$\sin\theta = \frac{x}{\rho\sqrt{2}}. \tag{30}$$

These can be combined, eliminating θ, as

$$\begin{aligned}\varepsilon_x &\leq \frac{b\rho}{2}\left(1 - \sqrt{1 - \sin^2\theta}\,\right)\\ &\leq \frac{b\rho}{2}\left(1 - 1 + \frac{1}{2}\sin^2\theta + \ldots\right)\\ &\leq \frac{b\rho}{4}\left(\frac{x}{\rho\sqrt{2}}\right)^2\end{aligned}$$

or

$$\varepsilon_x \leq \frac{bx^2}{8\rho}. \tag{31}$$

That is, the total miscolored error of the grid-polygonal approximation can be made as small as desired by choosing x small.

5. GENERAL PATTERNS

The grid-polygonal approach depends on getting bounds for the length of a boundary line segment in a grid square in which a 1 for the derivative subsequence is created, or for which a definite part of the subsquare is miscolored. These bounds were obtained by assuming the boundary to be linear and unique in a grid square. However, as the bullseye example illustrates, patterns can be defined such that no matter how small a grid is chosen, the boundary may appear as multiple curves in the subregion.

The central issue in each bound required is the comparison of an area with its perimeter, and some general information is known about this question which is recalled here [2, p. 373].

1. Among closed curves of length y, the curve enclosing maximum area Z is the circle (of radius $r = y/2\pi$).

2. Among curves of length y with endpoints on a line, the curve enclosing (with the line) maximum area Z is the semicircle.

In addition to facts 1 and 2, it will be convenient to augment them with the following:

3. Among curves of length y with endpoints on the legs of a right angle, the curve enclosing (with the right angle) maximum area Z is the quarter circle.

To prove 3, a contradiction can be obtained by assuming some curve not a quarter circle gives greater area Z'. Then this curve reflected about one of the legs of the right angle gives greater area Z' than a semicircle on a line with length $2y$. But this is impossible because of the fact 2 above.

It is possible to show now that for a general pattern, the inequality (2) holds, i.e.

$$E_x \leq \frac{1}{2} bx$$

but that (9) does not necessarily hold; in this latter case (9) can be replaced by the inequality

$$N_x \leq \frac{2b}{x\sqrt{\pi}}. \tag{32}$$

Since the arguments are somewhat extended, they are organized into two lemmas that follow.

LEMMA 1. $E_x \leq \frac{1}{2} bx$.

Proof. Given a square, consider areas $Z \leq \frac{1}{2} x^2$ which can be formed by curves of length y using 0, 1, 2, 3 sides of the square.

Case 0 sides. As noted, the maximum area per unit boundary is given by a circle, so

$$Z = \pi r^2, \qquad y = 2\pi r,$$
$$Z = y\left(\frac{y}{4\pi}\right),$$

for $Z \leq \frac{1}{2} x^2, y \leq \sqrt{2\pi}\, x, r \leq x/\sqrt{2\pi}$, and

$$Z \leq y\left(\frac{x}{2\sqrt{2\pi}}\right).$$

Case 1 side. The maximum area per unit boundary is given by a semicircle, so

$$Z = \frac{1}{2}\pi r^2, \qquad y = \pi r,$$
$$Z = y\left(\frac{y}{2\pi}\right),$$

for $Z \leq \frac{1}{2} x^2, y \leq \sqrt{\pi}\, x, r \leq x/\sqrt{\pi}$. In this case a semicircle with edge x has area $\pi x^2/4 < x^2/2$, so for areas in this interval $\pi x^2/4$, $x^2/2$ another curve besides a semicircle must be used, which only strengthens the inequality

$$Z \leq y\left(\frac{x}{2\sqrt{\pi}}\right).$$

Case 2 sides. The maximum area per unit boundary is given by a quarter circle

so

$$Z = \frac{1}{4}\pi r^2, \qquad y = \frac{1}{2}\pi r,$$
$$Z = y\left(\frac{y}{\pi}\right),$$

for $Z \leq \frac{1}{2}x^2, y \leq \sqrt{\pi/2}\, x, r \leq \sqrt{2/\pi}\, x$, and

$$Z \leq y\left(\frac{x}{\sqrt{2\pi}}\right).$$

Case 3 sides. The maximum area per unit boundary is given by a line parallel to the fourth side, so

$$Z \leq y\left(\frac{x}{2}\right).$$

In each case the inequality

$$Z \leq y\left(\frac{x}{2}\right)$$

holds. Summing the inequality over all grid squares provides the lemma.

LEMMA 2.

$$N_x \leq 2b/x\sqrt{\pi}\ .$$

Proof. In order that adjacent subsquares be opposite in color, a boundary must exist in the pair of subsquares such that an area of $x^2/2$ or more is separated from the remaining area in the pair of subsquares. The possible ways of doing this are enumerated in the proof of Lemma 1, and using the same argument, it is clear the minimum requirement for accomplishing this is a boundary of length x, using three sides of a subsquare. However, there is an additional possibility to be considered, as shown in Fig. 5, in which a boundary in one subsquare can create two successive 1's in the derived subsequence. In this case it is supposed the shaded area occupies at least half the center square. It has already been noted that a semicircle cannot be erected on an edge of length x to produce an area of $x^2/2$. However, the ratio x^2/x of area to boundary in the grid square will be bounded by the value for the

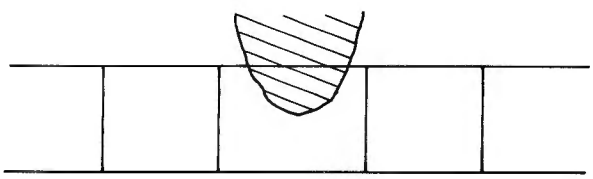

FIGURE 5.

semicircle boundary, i.e., the boundary y will be at least

$$y \leq \sqrt{\pi}\, x.$$

This produces two 1's in the count for N_x with less than 2_x units of boundary. Summing over N_x we have

$$N_x \sqrt{\pi}\, x/2 \leq b$$

or

$$N_x \leq 2b/x\sqrt{\pi}$$

as was to be shown.

The bounds in the general case now follow directly from the bounds of Lemmas 1 and 2, using the same calculations as in the grid polygonal approach, namely

$$p_x \leq \frac{2bx}{w^2\sqrt{\pi}} \tag{33}$$

$$H_x \leq \frac{2bx}{w^2\sqrt{\pi}} \ln_2 \frac{ew^2\sqrt{\pi}}{2bx} \tag{34}$$

$$I_x \leq \frac{2b}{x\sqrt{\pi}} \ln_2 \frac{ew^2\sqrt{\pi}}{2bx}, \tag{35}$$

$$\epsilon = \frac{1}{2} \frac{bx}{w^2}, \tag{36}$$

$$H \leq \frac{4\epsilon}{\sqrt{\pi}} \ln_2 \frac{e\sqrt{\pi}}{4\epsilon}, \tag{37}$$

$$I \leq \frac{b^2}{A} \left(\frac{1}{\epsilon\sqrt{\pi}} \ln_2 \frac{e\sqrt{\pi}}{4\epsilon} \right). \tag{38}$$

There are the general bounds of (4) and (2) for H and I, using $\phi(\epsilon)$ given in (6).

6. VISUAL PATTERNS

Although patterns can be defined mathematically, and a grid size can be selected which is arbitrarily small, many patterns of natural origin have definite limits to the grid sizes which should be considered. Consequently, the information content of such patterns is bounded by these natural limits. For example, a telephoto has a natural grid structure, as does a television, or cathode ray tube pattern. In such patterns, it is more convenient to consider the visual detail required rather than area miscolored. Suppose this detail is defined in terms of a *visual grid*, a checkerboard pattern of finest definition of interest as a grid. This visual grid can be no finer than the natural grid of the pattern, and it appears, often, that such visual grids should be a factor of 5 to 20 times larger than the natural grid; i.e., an edge v of a square barely discernible in a checkerboard pattern and edge x of the

natural grid structure should be related as

$$v = \lambda x \tag{39}$$

where $\lambda \geq 1$ and $\lambda = 5$ to 20 in typical instances.

The length of the boundary of this checkerboard pattern is easily determined. There will be w/v lines of length w in each horizontal and vertical direction, or

$$b = \frac{2w^2}{v} \tag{40}$$

Now, recalling the definition for ε in (17),

$$\varepsilon = \frac{1}{2}\,\frac{bx}{w^2}$$

and using (39) and (40), it turns out that

$$\varepsilon = 1/\lambda \tag{41}$$

so that the various bounds on E, H, I can be formulated in terms of λ as well.

The data compaction possible in such visual patterns is of interest. Using $\varphi_P(\varepsilon)$ for $\varepsilon = \frac{1}{5}, \frac{1}{10}, \frac{1}{20}$ these compaction ratios are

$$\lambda = 5\ 10\ 20,$$
$$H = 0.712\ 0.556\ 0.378.$$

While perhaps surprising, these data compaction ratios possibly are very modest ones.

7. MULTICOLORED PATTERNS

Consider a grid-polygonal multicolor pattern with

$$N = 1 + 2^n \tag{42}$$

colors. Then, with each 1 in the derivative subsequence, some other of the 2^n remaining colors must be indicated, which can be done in n bits (and possibly less, in the average, if all colors are not equally likely, or if correlations among colors exist). Using the bound of (9) for N_x, there will be

$$nN_x \leq bn/x$$

additional bits required for the pattern. For specified $\varepsilon > 0$, using (17) this becomes

$$nN_x \leq \frac{b^2 n}{2A\varepsilon},$$

hence, the bound on information content for the pattern of N colors, I_N, can be

written as

$$I_N \leq \frac{b^2}{2A\varepsilon}\left(n + \ln_2 \frac{e}{2\varepsilon}\right)$$

or,

$$I_N \leq A\beta^2 \frac{1}{2\varepsilon} \ln_2 \frac{e(N-1)}{2\varepsilon} \tag{43}$$

which is equivalent to (2) using (7a).

8. CONCLUDING REMARKS

There is a large literature on image digitization and coding; see, e.g., the textbooks [3–4]. In particular, there have been several empirical studies on the information content of digital images for fixed sampling grid size. The choice of grid size for image digitization is commonly made on the basis of spatial frequency content, in accordance with the two-dimensional sampling theorem. This paper takes a rather different approach, which appears to be more appropriate when the patterns to be sampled have already been quantized. It is hoped that the appearance of this paper will serve as a stimulus to further work on the information content of patterns.

APPENDIX

Consider a square of edge length x oriented randomly with respect to a boundary line. Let the boundary line be fixed in Cartesian (u, v) coordinates, as the u axis, let the center of the square be on the v axis a distance y from the origin, and let the acute angle between the axis of scan of the square and the u axis be an angle σ, as diagramed in Fig. A1.

In Fig. A1 the corners of the square are labeled A, B, C, D, and the axis of scan is the line EG, which passes through the center of the square F.

We assume all possible translations y and rotations σ are equally likely and wish to compute these quantities of interest for those squares which intersect the boundary:

1. The probability that the axis of scan intersects the boundary line,

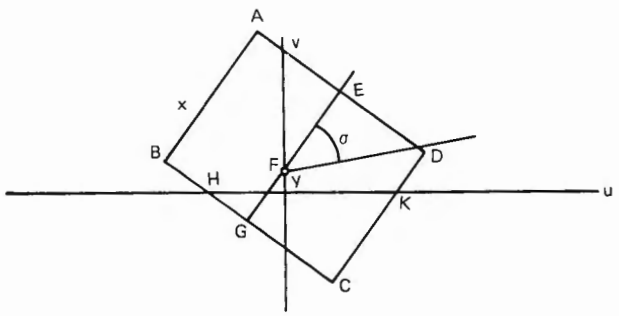

FIGURE A1.

2. The expected length of the intersecting boundary line (*HK* in the diagram),

3. The expected smaller area defined by the intersecting boundary line (*HCK* in the diagram).

In Fig. A1, the corners A, B, C, D can be described as rotations of the point $(x\sqrt{2}, y)$ about the point $(0, y)$ by angles $\sigma + \pi/4, \sigma + 3\pi/4, \sigma + 5\pi/4, \sigma + 7\pi/4$, respectively, while the endpoints of the scan axis E, G are rotations of $(x/2, y)$ about $(0, y)$ by angles σ, respectively. Since the coordinates of any point (a, b) rotated about a point $(0, b)$ by an angle α are simply

$$(a\cos\alpha, b + a\sin\alpha),$$

we can immediately write out the coordinates of the points above as

$$A = \left(\frac{x}{\sqrt{2}}\cos\left(\sigma + \frac{\pi}{4}\right), y + \frac{x}{\sqrt{2}}\sin\left(\sigma + \frac{\pi}{4}\right)\right), \text{etc.}$$

By symmetry, suppose the center of the square is on the positive v axis, and that the angle between the axis of scan and the u axis is a positive acute angle, i.e.,

$$y \geq 0, \qquad 0 \leq \sigma \leq \frac{\pi}{2}.$$

Under these conditions on σ, the point C is necessarily one of the lowermost points of the square (the lowermost unless $\sigma = 0$ or $\pi/2$). Thus, in order for the boundary to intersect the square, the v coordinate of corner C must not be positive, i.e.,

$$y + \frac{x}{\sqrt{2}}\sin\left(\sigma + \frac{5\pi}{4}\right) \leq 0.$$

Thus, (σ, y) coordinates, the set of possible values R for which the boundary intersects the square are, as diagramed in Fig. A2,

$$0 \leq \sigma \leq \frac{\pi}{2},$$

$$0 \leq y \leq -\frac{x}{\sqrt{2}}\sin\left(\sigma + \frac{5\pi}{4}\right) = \frac{x}{2}(\sin\sigma + \cos\sigma).$$

By hypothesis, any position possible in R is equally likely, e.g., the probability a

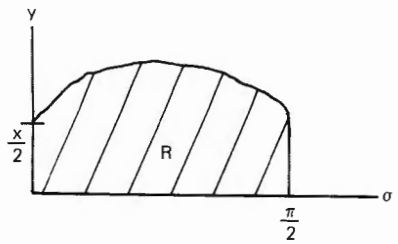

FIGURE A2.

square is in a position in the region $(\sigma, \sigma + d\sigma)\ x\ (y, y + dy)$ is $k\, d\sigma\, dy$. In order to evaluate k, we integrate the probability over the whole set and equate to unity

$$\begin{aligned} 1 &= k \int_R d\sigma\, dy, \\ &= k \int_0^{\pi/2} d\sigma \int_0^{x(\sin\sigma + \cos\sigma)/2} dy, \\ &= k \int_0^{\pi/2} d\sigma x(\sin\sigma + \cos\sigma)/2 \\ &= kx; \end{aligned}$$

hence $k = \dfrac{1}{x}$.

Case 1: The probability that the axis of scan intersects the boundary line. In order for the axis of scan to intersect the boundary line, the v coordinate of endpoint G must not be positive, i.e,

$$y + \frac{x}{2} \sin(\sigma + \pi) \leq 0$$

or

$$y \leq -\frac{x}{2} \sin(\sigma + \pi) = \frac{x}{2} \sin\sigma.$$

Thus, the required probability, p, is

$$\begin{aligned} p &= \frac{1}{x} \int_{R^*} d\sigma\, dy, \qquad R^* = R \cap \left\{ (\sigma, y) \middle| y \leq \frac{x}{2} \sin\sigma \right\}, \\ &= \frac{1}{x} \int_0^{\pi/2} d\sigma \int_0^{(x \sin\sigma)/2} dy, \\ &= \frac{1}{x} \int_0^{\pi/2} d\sigma\, x(\sin\sigma)/2, \\ &= \frac{1}{2}. \end{aligned}$$

Case 2: The expected length of the intersecting boundary line. The square and boundary line can intersect in three general ways, indicated in Fig. A3 depending on which corners, C, D, or C, or B, C are below the u axis.

Cases (a) and (c) are symmetric, and case (b) is symmetric about the angle $\sigma = \pi/4$. Thus, only cases (a) and (b) for $\sigma \leq \pi/4$ need be considered with the result doubled.

In case (a), the length of the intersecting boundary at point (σ, y) is simply $x/\cos\sigma$, and the corresponding integral is

$$B_1 = \frac{2}{x} \int_{R_1} d\sigma\, dy\, x/\cos\sigma,$$

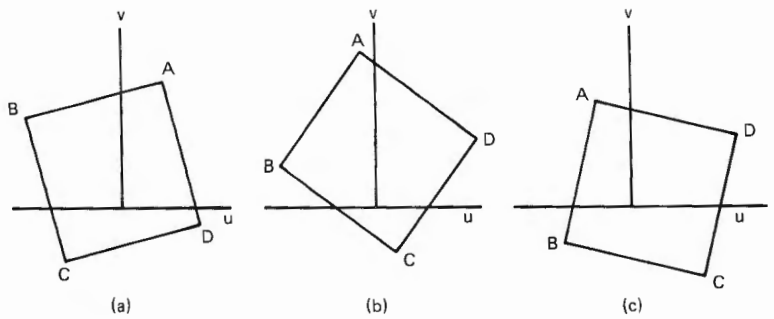

FIGURE A3.

where R_1 is the region in which $0 \leq \sigma \leq \pi/4$ and the y coordinate of the corner D is not positive, i.e.,

$$y + \frac{x}{\sqrt{2}} \sin\left(\sigma + \frac{7\pi}{4}\right) \leq 0.$$

On integration, B_1 becomes

$$\begin{aligned} B_1 &= \frac{2}{x} \int_{R_1} d\sigma\, dy\, \frac{x}{\cos\sigma}, \\ &= 2\int_0^{\pi/4} \frac{d\sigma}{\cos\sigma} \int_0^{-(x\sin(\sigma+7\pi/4))/\sqrt{2}} dy, \\ &= 2\int_0^{\pi/4} d\sigma \left(\frac{-x\sin(\sigma + 7\pi/4)}{\sqrt{2}\,\cos\sigma}\right), \\ &= 2x\int_0^{\pi/4} d\sigma \left(\frac{\cos\sigma - \sin\sigma}{2\cos\sigma}\right), \\ &= x(\sigma + \ln\cos\sigma)\Big|_0^{\pi/4}, \\ &= x\left(\frac{\pi}{4} - \frac{1}{2}\ln 2\right). \end{aligned}$$

In case (b), the length of the boundary can be formulated as

$$d(\cos\sigma + \sin\sigma),$$

where d is the magnitude of the (negative) v coordinate of the corner C (consider the intersecting boundary as sides of two right triangles obtained by dropping a perpendicular from corner C to the u axis) and the corresponding integral is

$$B_2 = \frac{2}{x} \int_{R_2} d\sigma\, dy \left(y + \frac{x}{\sqrt{2}} \sin\left(\sigma + \frac{5\pi}{4}\right)\right)(\cos\sigma + \sin\sigma),$$

where R_2 is the region in which $0 \leq \sigma \leq \pi/4$ and the y coordinate of corner D is

positive, i.e.,

$$y + \frac{x}{\sqrt{2}} \sin\left(\sigma + \frac{7\pi}{4}\right) \geq 0.$$

On integration B_2 becomes

$$\begin{aligned} B_2 &= \frac{2}{x}\int_0^{\pi/4} d\sigma(\cos\sigma + \sin\sigma)\int_{-(x\sin(\sigma+7\pi/4))/\sqrt{2}}^{-(x\sin(\sigma+5\pi/4))/\sqrt{2}} dy \\ &\quad \times\left(y + (x\sin(\sigma + 5\pi/4))/\sqrt{2}\right) \\ &= \frac{2}{x}\int_0^{\pi/4} d\sigma(\cos\sigma + \sin\sigma)\frac{x^2}{4}(\sin(\sigma + 5\pi/4) - \sin(\sigma + 7\pi/4))^2, \\ &= \frac{x}{2}\int_0^{\pi/4} d\sigma(\cos\sigma + \sin\sigma)4\sin^2(-\pi/4)\cos^2(\sigma + 3\pi/2), \\ &= x\int_0^{\pi/4} d\sigma(\cos\sigma + \sin\sigma)\sin^2\sigma, \\ &= \frac{x}{3}(2 - \sqrt{2}). \end{aligned}$$

The total integral then becomes

$$\begin{aligned} B &= B_1 + B_2, \\ &= x\left(\frac{\pi}{4} - \frac{1}{2}\ln 2 + \frac{1}{3}(2 - \sqrt{2})\right), \\ &= 0.635x. \end{aligned}$$

Case 3: The expected smaller area defined by the intersecting boundary line. In this case, the area in question is the area in the square below the u axis, and the three subcases and symmetry of Case 2 apply as well.

In case (a) the area in the square below the u axis is x times the average slant distance from C and D to the u axis along the edges of the square, i.e.,

$$a_1 = \frac{x}{2}\left(-y - \frac{x}{\sqrt{2}}\sin\left(\sigma + \frac{5\pi}{4}\right) - y - \frac{x}{\sqrt{2}}\sin\left(\sigma + \frac{7\pi}{4}\right)\right)\Big/\cos\sigma$$

and the corresponding integral is

$$A_1 = \frac{2}{x}\int_{R_1} d\sigma\, dy a_1.$$

On integration, A_1 becomes

$$A_1 = \frac{2}{x}\int_0^{\pi/4}\frac{d\sigma}{\cos\sigma}\int_0^{-(x\sin(\sigma+7\pi/4))/\sqrt{2}} dy\frac{x}{2}\left(-2y - \frac{x}{\sqrt{2}}\sin\left(\sigma + \frac{5\pi}{4}\right)\right.$$
$$\left. - \frac{x}{\sqrt{2}}\sin\left(\sigma + \frac{7\pi}{4}\right)\right),$$

$$= \int_0^{\pi/4} \frac{d\sigma}{\cos\sigma} \frac{x^2}{8}\left(\left(\sin\left(\sigma + \frac{7\pi}{4}\right) + \sin\left(\sigma + \frac{5\pi}{4}\right)\right)^2\right.$$

$$\left. - \left(\sin\left(\sigma + \frac{7\pi}{4}\right) - \sin\left(\sigma + \frac{5\pi}{4}\right)\right)^2\right),$$

$$= \frac{x^2}{4}\int_0^{\pi/4} \frac{d\sigma}{\cos\sigma} \sin\left(\sigma + \frac{7\pi}{4}\right)\sin\left(\sigma + \frac{5\pi}{4}\right),$$

$$= \frac{x^2}{4}\int_0^{\pi/4} \frac{d\sigma}{\cos\sigma}(\cos^2\sigma - \sin^2\sigma),$$

$$= \frac{x^2}{4}\int_0^{\pi/4} d\sigma\left(2\cos\sigma - \frac{1}{\cos\sigma}\right),$$

$$= \frac{x^2}{4}\left(\sqrt{2} - \frac{1}{2}\ln\frac{2+\sqrt{2}}{2-\sqrt{2}}\right).$$

In case (b), the area in the square below the u axis is $d^2(\cos\sigma + \sin\sigma)/2$ where d is again the magnitude of the v coordinate of corner C. The corresponding integral is

$$A_2 = \frac{2}{x}\int_{R_2} d\sigma\, dy\left(y + \frac{x}{\sqrt{2}}\sin\left(\sigma + \frac{5\pi}{4}\right)\right)^2(\cos\sigma + \sin\sigma)/2,$$

$$= \frac{1}{x}\int_0^{\pi/4} d\sigma(\cos\sigma + \sin\sigma)\int_{-(x\sin(\sigma+5\pi/4))/\sqrt{2}}^{-(x\sin(\sigma+7\pi/4))/\sqrt{2}} dy\left(y + \frac{x}{\sqrt{2}}\sin\left(\sigma + \frac{5\pi}{4}\right)\right)^2,$$

$$= \frac{1}{x}\int_0^{\pi/4} d\sigma(\cos\sigma + \sin\sigma)\frac{x^3}{6\sqrt{2}}\left(\sin\left(\sigma + \frac{5\pi}{4}\right) - \sin\left(\sigma + \frac{7\pi}{4}\right)\right)^3,$$

$$= x^2\int_0^{\pi/4} d\sigma(\cos\sigma + \sin\sigma)\frac{1}{6\sqrt{2}}\left(2\sin\left(-\frac{\pi}{4}\right)\cos\left(\sigma + \frac{3\pi}{4}\right)\right)^3,$$

$$= \frac{x^2}{3}\int_0^{\pi/4} d\sigma(\cos\sigma + \sin\sigma)\sin^3\sigma,$$

$$= x^2(\pi - 2)/32.$$

The total integral is then

$$A = A_1 + A_2,$$

$$= x^2\left(8\sqrt{2} - 4\ln\frac{2+\sqrt{2}}{2-\sqrt{2}} + \pi - 2\right)\Big/ 32,$$

$$= 0.315x^2.$$

The foregoing three cases can be summarized in two measures—scan axis crossings per unit of boundary, and miscolored area per unit of boundary. In the

first measure, using cases 1 and 2, there are $\frac{1}{2}$ scan axis crossings per $0.635x$ units of boundary, or

$$N_x = \frac{1}{1.270x} = \frac{0.787}{x}$$

scan axis crossings per unit of boundary. In the second measure, using cases 2 and 3, there are $0.315x^2$ units of miscolored area per $0.635x$ units of boundary, or

$$E_x = \frac{0.315x^2}{0.635x} = 0.495x$$

units of miscolored area per unit of boundary.

REFERENCES

1. C. E. Shannon and W. Weaver, *The Mathematical Theory of Communication*, Univ. of Illinois Press, Urbana, Ill., 1949.
2. R. Courant and H. Robbins, *What is Mathematics*? Oxford Univ. Press, London/New York, 1941.
3. W. K. Pratt, *Digital Image Processing*, Wiley, New York, 1978.
4. A. Rosenfeld and A. C. Kak, *Digital Picture Processing*, Academic Press, New York, 1976.