THE ADAPTION OF CONSTANT PRESSURE

TO

A MODIFIED VICTOR MEYER VAPOR DENSITY APPARATUS

by

Lyman Cox

and

Walter Robert Johnson

A THESIS SUBMITTED FOR THE DEGREE OF

BACHELOR OF SCIENCE

CHEMICAL ENGINEERING COURSE

The University of Tennessee

1933

TABLE OF CONTENTS

		Page
I.	Introduction	1
	1. Theory of the Victor Meyer Method	1
	2. Historical Foreword	3
	3. Advantages of the Victor Meyer Method	4
	4. Disadvantage of the Victor Meyer Method	4
	5. Purpose of Present Investigation	4
II.	Historical Development	5
	1. Victor Meyer	5
	2. Schwartz	5
	3. Wesier	5
	4. MacInnes and Kreiling	6
	5. Hicks-Bruun	6
III.	General Theory	9
	1. Application of the Simple Gas Law	9
	2. Attempts to Express the Exact Behavior of Actual Gas	9
	3. The Method of Limiting Densities	10
	4. Limitations and Sources of Errors	10
IV.	Experimental Part	12
	1. Description of Modified Victor Meyer Apparatus	12
	2. Description of Constant Pressure Apparatus	16
	3. Procedure	16
	(a) Sample	18
	(b) Adjustment of the Apparatus	18
	(c) Introduction of Sample	18
	(d) Measurement of Displaced Air	18
V.	Results and Calculations	20
	1. Sample Computations	20
	2. Experimental Results and Calculations	22
VI.	Summary and Conclusions	24
	1. Advantages	24
	2. Comparison of Results	24
VII.	Bibliography	25
VIII.	Approval	27

THE ADAPTION OF CONSTANT PRESSURE TO A MODIFIED VICTOR MEYER VAPOR DENSITY APPARATUS

I. INTRODUCTION

1. Theory of the Victor Meyer Method. The Victor Meyer Method is based upon the fact that when a definite quantity of a substance, the molecular weight of which is to be determined, is vaporized it displaces a volume of air equal to that occupied by the vapor. Hence, if the volume of air displaced by the vapor from a definite weight of the sample is measured, the density of the vapor is obtained. The molecular weight of the substance in the state of vapor may then be calculated. This involves merely ascertaining the mass of the vapor in grams which, under the same conditions of temperature and pressure, will occupy the same volume as 32 grams of oxygen. This weight is called the gram-molecular weight of the substance, while the corresponding volume is known as the gram-molecular or molar volume. The molar volume is nearly the same for all gases, and at 0° and 760 mm. it may be taken equal to 22.4 liters, or, more exactly, 22.412 liters.

The relationship between density and molecular weight may be seen from the following considerations: Avogadro's law is that under like conditions of temperature and pressure the same volumes of two gases contain the same number of molecules. Hence the densities of two gases are in the ratio of their molecular weights. As stated before, one mol of a gas under standard conditions occupies 22.412 liters. Therefore, the density,

$$D = (\text{Mol. Wt.}) / (22.412)$$

Then if v cc. of a gas are collected from w grams of a substance at t° and p cm. pressure, the weight in grams of 22,412 cc. at 0° and 76 cm. will be given by the following proportion, in which M denotes the molecular weight of the substance:

$$w : (p\,v / t^\circ + 273) = M : (76)(22,412)/(273),$$

or
$$M = \frac{(w)(76)(22,412)(t^\circ + 273)}{(273)(pv)}$$

This equation may also be deduced from the simple gas law equation:

$$P\,V = n\,R\,T$$

In this equation, n, the number of gram-molecules may be written w/M, where w is the weight of the substance in grams and M is the molecular weight. This gives the expression:

$$P\,V = \frac{w}{M} R\,T,$$

or,
$$M = (w)(R)(T)/(p)(v)$$

R is the gas constant and may be evaluated by substituting into the equation P V = n R T the known values of P, V, n, and T for any particular set of conditions, say standard. Taking 1 mol under standard conditions we would obtain the expression:

$$(76)(22,412) = (1)(R)(273)$$

or,
$$R = (76)(22,412)/(273)$$

when P is expressed in cm. of mercury, V in cc. and T in degrees absolute. By substituting this value of R in the equation M = wRT/pv, we

obtain the relation:

$$M = (w)(76)(22,412)(T)/(273)(P)(V)$$

$$M = (w)(76)(22,412)(t + 273)/(273)(P)(V)$$

where t is the temperature on the centigrade scale.

2. Historical Foreword. The determination of vapor density by the Victor Meyer method has been used extensively in the field of research and instructional laboratories during the last fifty years. In most cases the results obtained were only rough approximations, yet they were sufficiently accurate to show which multiple of the simplest molecular weight as determined by analysis corresponded to the true molecular weight. Such determinations have been especially useful in the identification of organic compounds. The principles may be applied also to the study of association or dissociation of substances in the vapor state. In this case the ddeviation of the vapor densities of the the substances from their theoretical vapor densities could be taken as a measure of their association or dissociation at the temperature of the vapor. The original forms of the Victor Meyer apparatus are open to considerable errors, resulting from variations in pressure and temperature.

Before it is possible to use the Victor Meyer apparatus for accurate quantitative work some means of obtaining a constant partial pressure of vapor must be found. In most cases the pressure of the vapor at the point of vaporization is practically the same as that of the atmosphere, varying from this value to zero, by dilution with air. If a dissociation of the vapor occurs, the magnitude of this dissociation will increase as the partial pressure decreases.[1] The more quickly

the mingling occurs, the greater will be the quantity of air displaced. As a result, no simple interpretation can be taken from the results, for it will not be known how far the mixture has gone at the time the measurement was taken. In any form of the Victor Meyer apparatus the diameter of the tube at the boundary between vapor and air should be small so as to reduce the magnitude of this error.

3. Advantages of the Victor Meyer Method. The advantage of the Victor Meyer method is that it provides a quick simple method for determining the molecular weight (approximate) of compounds which may be easily vaporized.

4. Disadvantages of the Victor Meyer Method. The disadvantage of the Victor Meyer apparatus as originally designed are as follows: the apparatus is tall and cumbersons to operate; the inner tube is not entirely enclosed by the outer jacket which makes it difficult to obtain a constant temperature throughout the length of the tube; the danger that some of the vapor will find its way to the cooler part of the tube and condense, and that diffusion with air will occur; no provision is made for regulating the pressure or keeping it constant, and it is not so designedeas to make it easy to attach a condenser to the outer jacket. In fact condensers were not used at all.

5. Purpose of Present Investigation. The purpose of the present investigation is to make use of a modified, more compact apparatus designed by Prof. J. H. Robertson which through being operated under constant pressure gives more accurate as well as more easily calculated results.

---

1. W. Nernst: Theoretical Chemistry.

II. HISTORICAL DEVELOPMENT

1. Victor Meyer. The Victor Meyer apparatus consists of a long vaporization tube with a bulb at the lower end. This tube is partially enclosed by an outer jacket and is closed at the top by a rubber or well-rolled cork stopper. A side arm near the top of the tube conducts the displaced air to a endiometer in which the air is collected over water.

2. Schwartz. Several men have contributed to the determination of molecular weights. Schwartz[1], in his apparatus, contributed compactness. This was obtained by using a furnace enclosing a wide combustion tube. The sample was placed into the apparatus through the mouth of the tube, and the tube then tilted so as to slide the sample into the hot portion of the tube. The apparatus of Schwartz is open to the objection that it does not provide for reducing the errors due to diffusion. A small neck space should have been provided for this purpose. This has been pointed out by Weiser. Another objection to the apparatus of Schwartz is that the temperature is more difficult to control when using an air bath than a liquid bath or steam jacket.

3. Weiser. The apparatus of Weiser[2] was an important contribution in that it minimizes the danger of diffusion of the vapor from the hot to the cold parts of the container. His apparatus consisted of a vaporization tube 3 cm. in diameter and 24.5 cm. long. The delivery tube is in the center of the vaporizing tube and is sealed with its bottom. The vaporization tube opens into the delivery tube, the vapor being led to the measuring tube. The entire U of the tube is contained in the

---

1. Schwartz: Ber. Deutsch. Chem. Ges., 16, 1051 (1883).
2. Weiser: Jour. Phys. Chem., 20, 532 (1916).

vapor jacket (51 cm.) This apparatus also had its disadvantages, as Weisner's method of introducing the sample was unsatisfactory. The procedure was to remove the stopper from the inner tube, drop the sample and replace the stopper. This manner of entering the sample allowed cold air to enter the vaporizing tube. Another disadvantage was that the delivery tube had to be moved under the mouth of the endiometer after the sample was introduced, however, this was done before the sample was vaporized and only presented a possible source of error. It would also be very difficult to sweep the bottom of the vaporization tube clear of the vapors following an experiment.

4. MacInnes and Kreiling. MacInnes and Kreiling[3] also made valuable contributions to the study of vapor density measurement by the Victor Meyer method. Their results, the computation of which were made using the Bertholet equation of state, vary from the accepted values of the molecular weight by but a few tenths of a unit. The vaporization tube used by MacInnes and Kreiling was 5 cm. in diameter and 25 cm. long, the inner tube extending into this being 15 mm. bore and 28 cm. long. They found that the vapor of a sample displacing 26 cc. of air will rise to within 12 cm. of the delivery tube. Thus, if the volume of vapor was just a little more, it would diffuse into the delivery tube while the operator was waiting for the expelled air to reach a state of thermal equilibrium. Here the vapor, so diffused, would condense and introduce an error into the results.

5. Hicks-Bruun. M. M. Hicks-Bruun while with the U. S. Bureau of Standards[4] developed a modification of the Victor Meyer apparatus which

---

3. MacInnes and Kreiling: Jour. Am. Chem. Soc., 39, 2350 (1917).
4. Hicks-Bruun: U. S. Bur. Stand. Jour. Research, 5, 575 (1930).

was capable of giving very accurate results. The apparatus operated on the principle that the air passing through the outlet would be free from vapor. This was accomplished by means of a series of bulbs that decreased the speed of expansion by increasing the resistance to the passage of the vapor. The first bulb's capacity was about twice the volume that the substance would vaporize into. As the result, the vapor would be very dilute in the second and more so in the third. The air passing through the outlet would then be free of the vapor.

Mrs. M. M. Hicks-Bruun carried out her experiment by obtaining two sets of values, at a pressure of one atmosphere, and then at a pressure of one-half an atmosphere. This was done to make use of the method of limiting densities in calculating the true molecular weight. This method does not attempt to give the ratio of density to pressure, D/P, at zero pressure under which conditions the gas would be "ideal", but rather to obtain from vapor density measurements at two different pressures and the application of Berthelot's equations values for correcting the simple gas law expression. In the equation

$$M = \frac{m R T}{P V}(1 + AP) \qquad (1)$$

"A" is a constant which includes the critical constants in the usual form of the Berthelot equation. After obtaining the two sets of data, for one and then one-half atmospheres, and substituting these in the equation, the resulting equations were added thus:

$$M_1 + M_2 + M_3 + \ldots + M_n = \frac{D_1 R T_1}{P_1}(1 + Ap_1) +$$

$$\frac{D_2 R T_2}{P_2}(1 + Ap_2) + \frac{D_3 R T_3}{P_3}(1 + Ap_3) + \ldots + \frac{D_n R T_n}{P_n}(1 + Ap_n). =$$

$$= \frac{R_1 DT_1}{P_1} \left(+ \frac{D_2 T_2}{P_2} + \frac{D_3 T_3}{P_3} + \ldots + \frac{D_n T_n}{P_n} + \right.$$

$$\left. + A \left(D_1 T_1 + D_2 T_2 + D_3 T_3 + \ldots + D_n T_n \right) \right)$$

Which has the form:

$$M = R \left(c_1 + c_2 A \right),$$

Likewise the equations for 1/2 an atmosphere may be reduced to:

$$M = R \left(c_1' + c_2' A \right)$$

and $$c_2 A - c_2' A = c_1' - c_1,$$

$$A = \frac{c_1' - c_1}{c_2 - c_2'}$$

The value of A so calculated is now substituted in equation (1), and the molecular weight calculated for each determination.

The results obtained by Mrs. Bruun with the recognized values of the molecular weights of the substances to within three parts in a thousand. The one disadvantage lies in the fact that the use of a constant pressure device is not practical in the ordinary laboratory, and also complicates the mechanism of the experiment.[5]

---

5. This does not prove to be the case, as will be shown later in this article.

III. GENERAL THEORY

1. Application of the Simple Gas Law. The simple gas laws will not apply exactly in the determination of molecular weights. This is pointed out in a circular of the U. S. Bureau of Standards,[1] "This law is taken as part of the criteria of a perfect gas. .... None of the gases, however, obey this law; although for most practical purposes nearly all of the common gases may be considered as ideal at or below atmospheric pressure and at temperatures reasonably higher than the condensation temperature."

2. The simple gas laws assume that there is no attraction between the molecules of a gas and that the molecules have no volume. Budde corrected the equation usually written $P V = n R T$, to read

$$p (v - b) = n R T,$$

where b is constant for a gas, and p, v, and T represent the pressure, volume, and absolute temperature respectively, R, a constant which is the same for all gases, and N is the number of gram molecules under consideration. Van der Waals brought out that there is an attraction between the molecules, and that as the pressure is increased the molecules are brought closer together, increasing the attraction. He then wrote p of the above equation as $p(a/v)$ where a is the constant of molecular attraction for a gas.

From a further consideration of the causes for the deviation of actual gases from "perfect" gases, Berthelot developed an important equation which includes the critical constants of gases. His equation is

$$p v = N R T \left[1 + \frac{a P T_c}{128 P_c T} \left(1 - 6 \frac{T_c^2}{T^2}\right)\right]$$

which when used to determine molecular weights becomes:

$$M = \frac{m R T'}{p V'} \left[1 - \frac{a P T_c}{128 P_c T} \left(1 - 6 \frac{T_c^2}{T^2}\right)\right]$$

where:

M is the molecular weight,

m, the mass of the substance,

R, the gas constant,

P, the corrected barometric pressure,

P_c, the critical pressure,

T, the temperature at which substance is vaporized,

T', temperature atwhich displaced air is measured,

T_c, critical temperature, and

V', the volume of the displaced air.

This equation holds only over a range of 0 to 1 atmospheres.

3. To avoid the use of these rather complicated formulae as expressed by Van der Waals and Berthelot, the method of "limiting density"may be used. Values can be found with a high degree of accuracy, provided the values of the density of the gas at two or more pressures are known. The ratio of density to pressure, d/p, is plotted against pressure, and the curve extended to the axis of zero pressure. At this point the value of d/p should be exact, corresponding to the ratio for an ideal gas because the deviation from the simple gas laws becomes less and less as the pressure is lowered.

4. Limitations and Sources of Error. Evans[1] after a study of the errors of the Victor Meyer method pointed out the necessity of making

---

1. Evans: Jour. Amer. Chem. Soc., 35, 958 (1913).

correction for the quantity of water vaporized in the endiometer. He states that:

> After passing into the endiometer the air is saturated with water vapor, if the air in the inner tube at the beginning of the experiment is already saturated with moisture at room temperature no change in the degree of moistness results, and hence no change in volume due to this cause. It would therefore be incorrect in calculating the volume of air under standard conditions to deduct from the observed barometric reading the pressure of the aqueous vapor.
>
> If, on the other hand, the air in the apparatus is perfectly dry, its volume is measured by its becoming saturated with moisture, and this should be allowed for by deducting the pressure of the aqueous vapor from the barometric reading.
>
> If, lastly, the air in the apparatus at the beginning of the experiment is neither saturated at room temperature nor perfectly dry, the change in the degree of moistness of the air on becoming saturated is what the air originally lacked of being saturated. The appropriate correction to introduce is that fraction of the aqueous vapor for the room temperature which it lacked of saturation. The corrected reading is:

$$B = \frac{100 - H}{100} W$$

> in which B is the barometer pressure, H the hygrometer reading in per cent, and W the pressure for the room temperature.

Evans shows that the failure to make this correction might result in as great an error as 1 in 45.

Other suggested errors may be listed as: first, the adsorbed moisture on the walls of the apparatus which as pointed out by I. V. McHaffie[2] and Sam Leuher[3] in 1925, and Leuher[3] in 1926 decreases as the temperature increases; second, measured volume is greater than it should be by an amount equal to the volume of the substance in the liquid state; third, an inexact sample weight due to the buoyant effect

---

2. McHaffie: Jour. Amer. Chem. Soc., 47, 1559 (1925).
3. Leuher: Jour. Amer. Chem. Soc., 48, 1785 (1926).

of the air upon the small glass bulb containing the sample.

IV. EXPERIMENTAL PART

1. Description of the Modified Victor Meyer Apparatus. A sketch of the modified Victor Meyer apparatus used in this thesis is shown in the blueprint of Figure 1, page 13. The vaporization chamber (A) opens into an expansion tube at (E). This expansion tube is coiled around the vaporization chamber (A) and opens to the gas burette at (D). Both the chamber and coil are sealed into the bath at (C) and (D). This makes the apparatus rigid and firm. This type of the modified Victor Meyer apparatus is very compact, standing 33 cm. in height, and being 5.2 cm. in diameter. The volume of the vaporization chamber (A) is 100 cc., and the volume of the coil is 20 cc. The coil itself is made of 3 mm. tubing and is 190 cm. long. This coil gives the performance equal to that of the early type of Victor Meyer apparatus that was 210 cm. high, at the same time insuring a uniform temperature throughout. The small bore of the tube also serves to reduce the diffusion of the vapor. The jacket of the apparatus has its outlet at (F). This outlet may be connected to a condenser so that any substance may be used in the bath without discomfort to those present, due to disagreeable fumes. This jacket encloses the entire inner chamber and tube, thus allowing no possibility for the condensing of the vapors within the chamber and tube. The size of the apparatus makes it possible for the temperature to become uniform in about 15 minutes.

Several methods may be used for breaking the sample within the chamber. MacInnes and Kreiling's method was to hold and break the sample

Modified Victor Meyer Apparatus

Fig. I

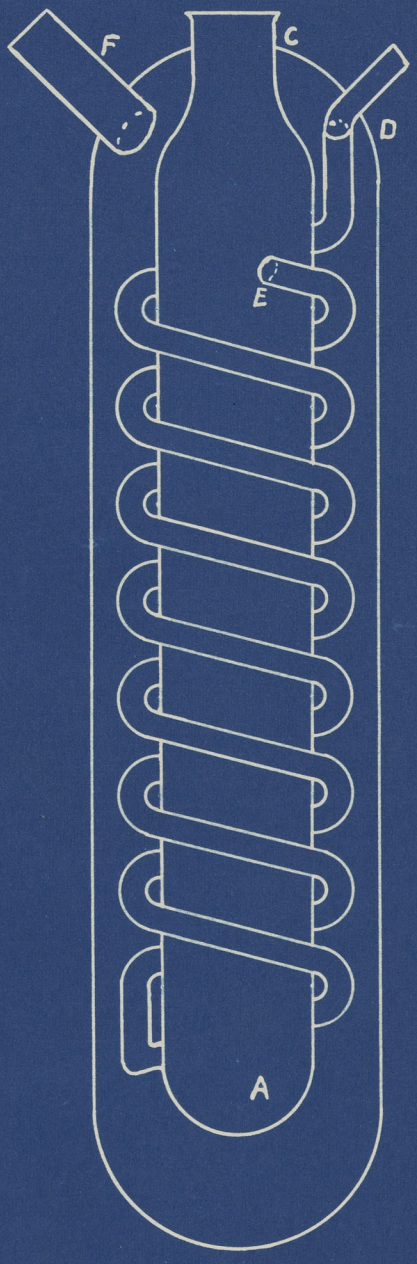

in the upper part of the chamber. This seems to be the simplest of the several methods of introducing and breaking the sample without introducing a source of error. The sample-breaking apparatus used here is as follows: A piece of glass tubing passes through a rubber stopper and to the bottom of the vaporizing chamber. A brass wire passes through this tube, and is connected to the tube with a gas tight joint with rubber tubing. The glass bulb containing the sample is hung in the U shaped crook of the wire, and is broken by pulling up on the rubber tubing. The rubber tubing brings the rod back to its original position after the breakage has occured, and the rubber tubing is released. The sketch of this apparatus is shown in the blue print of the hook up of the modified Victor Meyer apparatus (Figure 2).

The blue print of the modified Victor Meyer apparatus showing the connection to the gas measuring burette and the constant pressure lines will give an idea of how the apparatus looks. The condenser (B) cools and returns the substance boiled in the bath. The air expelled from the chamber and coil (A), Figure 2, is connected into an inverted burette (G), where the change of volume is measured. The water in this burette is brought to the same pressure as that indicated on the manometer (shown in the constant pressure sketch, Figure 3) by leveling with the water in (F), one end of which is connected to the constant pressure apparatus. This water leveling apparatus is connected to the two inverted burettes (H) and (G). The other ends of the burette (H) being connected to the constant pressure apparatus (C.P.). The other end of (G) is connected to the vaporization chamber (A). In order to insulate the air and water in the burette (G) from sudden local changes of temperature, the burette (G) is inclosed in a glass tube (D) which serves as an air jacket. The

Fig. II

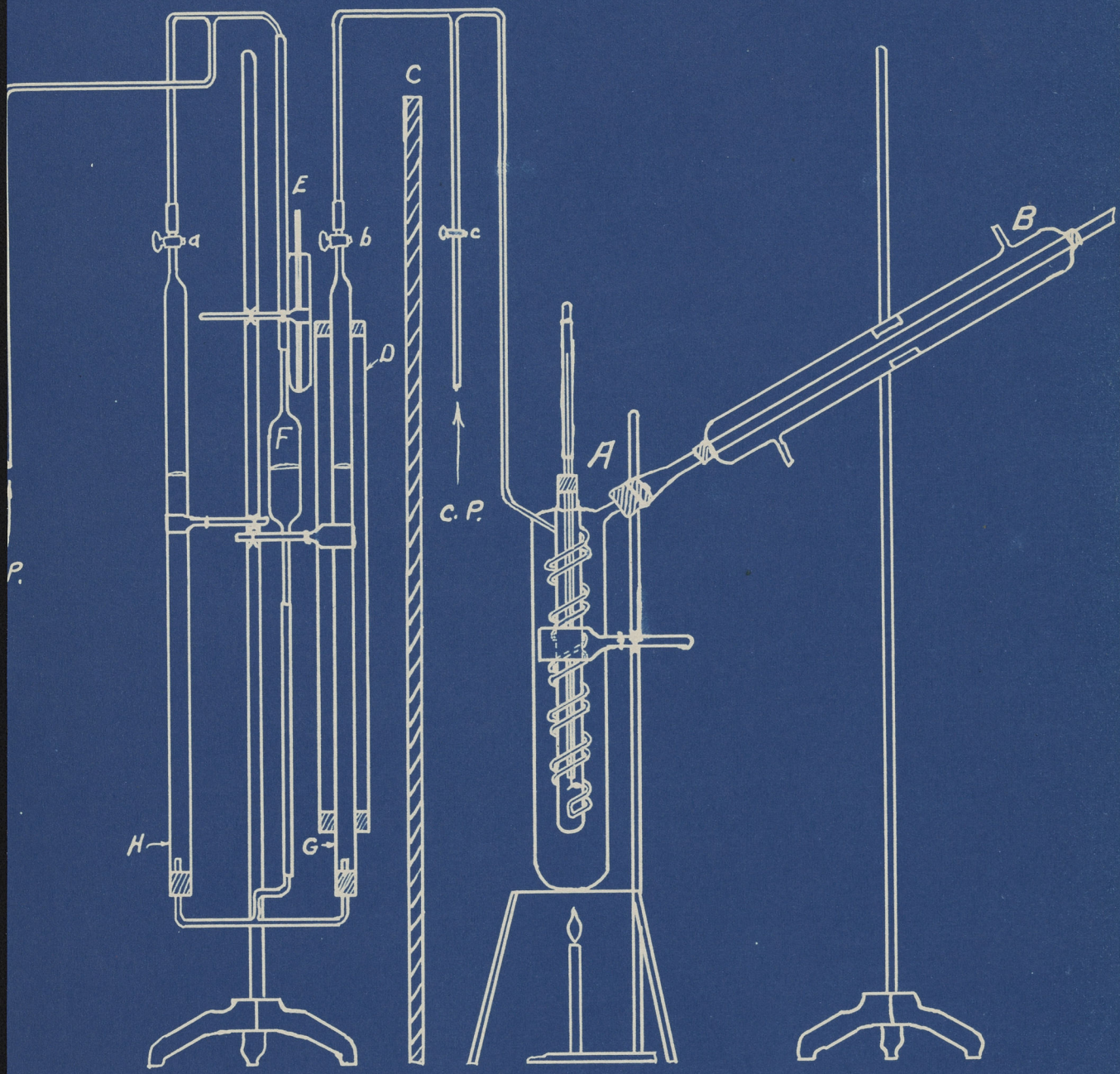

Modified Victor-Meyer Apparatus showing connection to gas measuring beurette and to constant pressure lines.

temperature recorded in the data is taken from the thermometer immersed in water in the test tube (E). This insures that the temperature recorded is the same as that of the water and air in the burette (G). However, local changes of temperature for a short time will have no effect.

The constant pressure apparatus used in this work is shown in the following blue print, Figure 3, page 17. Compressed air enters the line at (A) and passes through the dust trap (C), then to the storage chamber (D) (volume, 36 liters). Here the pressure builds up and creates a more constant pressure by minimizing the effect of the irregular pulsations caused by the compression pump. The pressure desired is obtained by raising or lowering the tube in the mercury valve (B). A finer adjustment of the height of mercury in the manometer (S) is obtained by raising or lowering the tubes in the water valve (E). The lines (H) conducting the pressure to the apparatus are connected to the constant pressure at (F). The value of the pressure is indicated by the manometer (S).

Procedure. To make use of the apparatus just described, the following procedure has been found excellent: (Referring to the drawing showing connections to gas measuring burettes and to constant pressure lines, Figures 2 and 3, pages 15 and 17). Put into the outer jacket of A a liquid which boils at approximately 50°C above the boiling point of the compound under consideration. The volume of the boiling liquid should be such that it just covers the lower end of the inner vaporization tube. Start the apparatus heating over a bunsen flame as shown, and connect a dry air train to the external lead of the vaporization coil, removing the stopper so that the coil and inner tube are swept out by a stream of dry air.

Now turn the compressed air into the constant pressure apparatus and

Fig. III

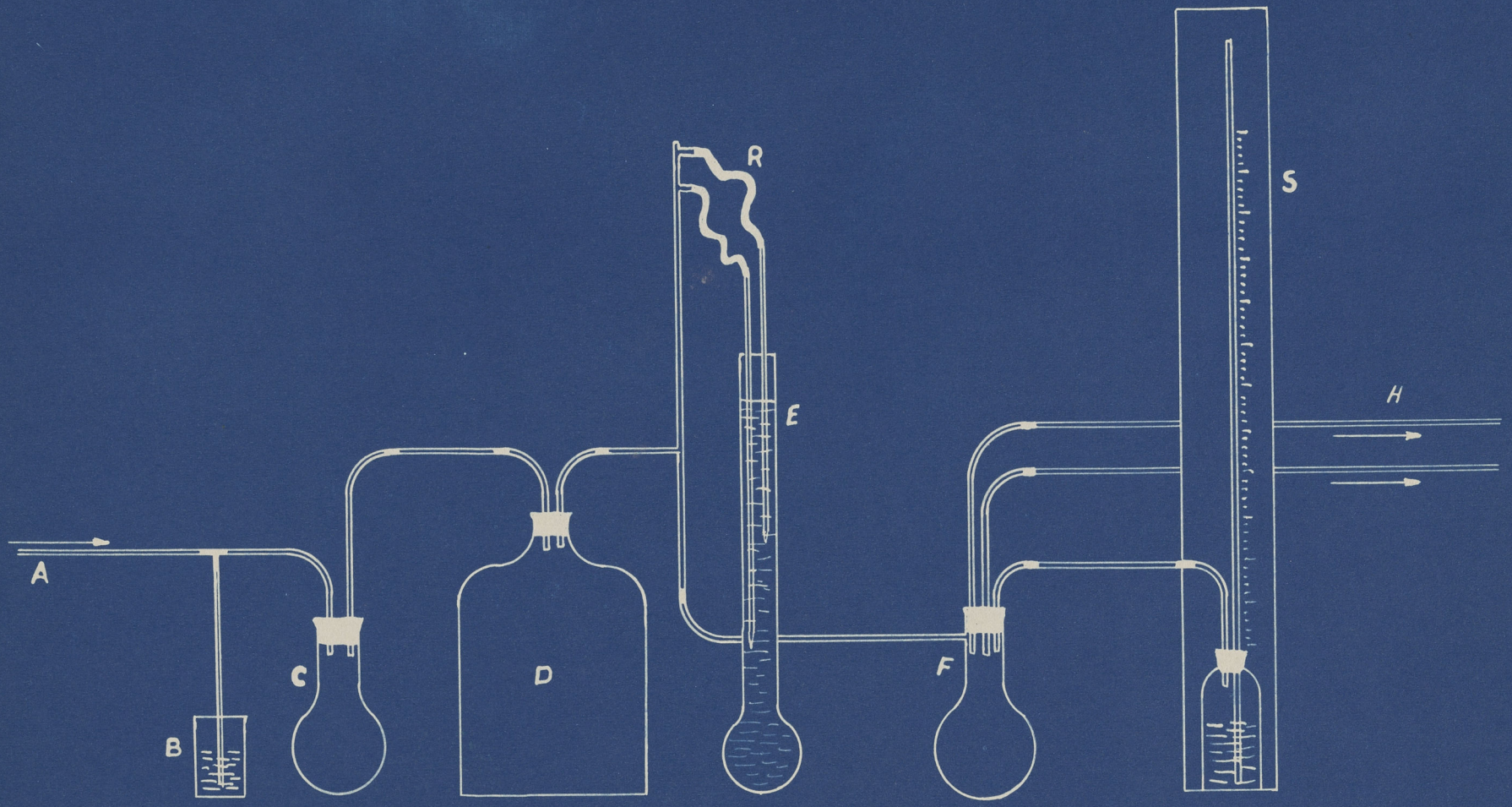

CONSTANT PRESSURE APPARATUS

adjust to the desired pressure, making sure that stopcocks b and c are closed.

Leaving the apparatus connected to the dry air supply, weigh a sample tube, made by blowing a small bulb on the end of a capillary stem, to the nearest 0.0001 gram. Then by warming the bulb, immersing the capillary under the surface of the liquid to be sampled, and finally cooling the bulb, a small sample will be drawn into the bulb. Seal the capillary by heating in a flame, and reweigh. The size of the sample should be between 0.03 and 0.07 grams for best results.

Cut off the dry air, attach the external lead of the coil again in the manner shown on the drawing, and hook the sample to the sample-breaking wire. Insert into vaporization tube, making sure that the stopper fits tightly.

While the sample is heating to a temperature above its vaporization temperature, open stop cocks b and c in order to equalize the pressure in the burettes (H) and (G) with the pressure shown by the constant pressure device, and with the vaporization tube.

As soon as the levels of the water in (F),(G),and (H) are the same, close stop cock c and read the volume of water contained in G. Read the temperature as shown by the thermometer (E), and check the manometer to see that the pressure is at the desired value.

Now, lower F so as to create a slight vacuum in the vaporization tube, and break the sample bottle by pulling up on the wire holder.

As the liquid vaporizes and forces air out of the coils, the level of the water in G falls. F should be lowered along with it. When no further change can be noted in the water level in G and when ample time has been allowed for the expelled air to come to room temperature, raise F so that the levels of water in F and in G are exactly the same. Then

read the volume of water in G.

The volume of air displaced by the sample against a pressure, as shown on the manometer of the constant pressure device, is the difference between the first volume of water in G and the second volume. This should be around 15 to 20 cc., at 760 mm. pressure.

Liquids that may be used as a boiling liquid and their respective boiling points are: water, 100°; xylene, 140°; aniline, 184°; ethyl benzoate, 213°; amyl benzoate, 261°, and diphenylamine, 310°.

V. CALCULATIONS AND RESULTS

In calculating, correction was made on the volume occupied by the sample in the liquid state where the weight of the sample was as much as 0.049 gram, and the correction was larger that the probable error in reading the gas measuring burette. The barometric pressure was corrected for the vapor tension of water since dry air was used in the apparatus.

The thermometer used to determine both the temperature at which the displaced air was collected and the temperature of the boiling liquid was calibrated are found to check within 0.1 ° which was as close as the thermometer used could be read.

MacInnes and Kreiling

Original Data and Results:

1. Wt. of sample in grams ..... 0.1023 g.
2. Volume of air ..... 35.33 cc.
3. Temperature, ° Centigrade ..... 32.5° C.
4. Relative humidity 0.58
5. Atmospheric pressure 743.95
6. Molecular weight (gas law) 75.72
7. Molecular weight (Berthelot equation) 74.20
8. Molecular weight (accepted value) 74.08

Calculations:

$$M = \frac{m R T'}{P V'} \left[1 - \frac{9 P T_c}{128 P_c T} \left(1 - 6 \frac{T_c^2}{T^2} \right) \right]$$

where:

M is the molecular weight,

m, the mass of the substance,

R, the gas constant,

P, the corrected barometric pressure,

P_c, the critical pressure,

T, the temperature at which the substance is weighed,

T', the temperature at which the volume of air was measured,

T_c, the critical temperature,

V', the volume of displaced air.

The term, $(m R T')/(PV')$, is an expression of the simple gas law. The results obtained through its application are not exact because no account is taken of attraction between molecules, nor of the volume of the molecules.

Recalculation of MacInnes and Kreiling

m, 0.1023 g.

R, 82.1 cm.atmospheres per degree[1]

$P = [\,743.95 - (100 - 58)(36.83)/(100)\,]/(760) = 0.959$ atmos.

$P_c = 35.3$ atmospheres[1]

T, $99.4° + 273 = 372.4°$ [1]

T', $32.5° + 273 = 305.5°$

T_c, $193.8° + 273 = 466.8°$[1]

v', 35.33 cc.

---

1. Hodgman and Lange: Handbook of Chemistry and Physics

$$M = \frac{(0.1023)(82.1)(305.5)}{(0.959)(35.33)} \left[1 - \frac{(9)(0.959)(466.8)}{(128)(35.5)(372.4)}\left(1 - 16\,\frac{(466.8)^2}{(372.4)^2}\right)\right]$$

$$M = 75.74\ (\ 1 - 0.02\ ) = 74.2 \text{ grams.}$$

Molecular weight by pure gas law = 75.74

Molecular weight by Berthelot's equation = 74.2

Molecular weight accepted value = 74.08

Sample Computations

1. Weight of sample, 0.0290 g.
2. Volume of air displaced, 9.80 cc.
3. Temperature = 27.2° + 273 = 300.2°.
4. Pressure = (760 - 26.78)/(760) = 0.9647 atmosphere.
5. R, 82.1 cm. atmospheres.
6. P_c = 35.5 atmospheres.
7. T_c = 466.8°.
8. T = 99.25° + 273 = 372.25°.

$$M = \frac{m\,R\,T'}{P\,V'}\left[1 - \frac{9\,P\,T_c}{128\,P_c T}\left(1 - 6\,\frac{T_c^2}{T^2}\right)\right]$$

$$M = \frac{(0.029)(82.1)(300.2)}{(0.9647)(9.8)}\left[1 - \frac{(9)(0.9647)(466.8)}{(128)(35.5)(372.25)}\left(1 - 6\frac{(466.8)^2}{(372.25)^2}\right)\right]$$

$$= (75.606)\left[1 - (0.00239)(8.435)\right]$$

$$= (75.606)(0.9798)$$

$$= 74.089$$

Tabulated Data for Ether

Water was used as boiling liquid.

Sample No.	Wt. Sample in grams	Vol. air displaced cc.	Temp. °C.	Bar. Pres. mm.	Molecular Weight			Error per cent
					Gas Law	Berth. Equa.	Accepted Value	
1	0.0290	9.80	27.2	760	75.606	74.08	74.08	0.00
2	0.0304	10.32	27.3	760	75.306	73.80	74.08	- 0.37
3	0.0435	14.95	27.3	760	74.50	73.00	74.08	- 1.44
4	0.0902	30.65	27.8	760	75.53	74.02	74.08	- 0.081
5	0.0464	15.35	26.8	760	75.50	74.00	74.08	- 0.108
Mean - - - - - - - - - - - - - - - - - -					75.23	73.8	74.08	- 0.37

VI. SUMMARY AND CONCLUSIONS

The advantages of the set-up used are well worth mentioning. This type of Victor Meyer apparatus is very compact. The whole of the vaporization tube is enclosed, thus allowing little, if any, change for condensation and giving a uniform temperature. The coils surrounding the vaporization tube and connected to it bring about a uniform air expansion because of the small bore and resulting opposition to sudden changes in volume. The connection of the outer jacket to a condenser returns the boiling liquid and prevents objectionable odors or fumes.

The constant pressure attachment makes it possible to work at any desired pressure from approximately one-fourth to one and a fourth atmospheres.

In conclusion, it is well to compare the results obtained with those obtained by MacInnes and Kreiling. For ether, they obtained results ranging from + 0.16 % to - 0.78 %, giving a mean per cent error of - 0.24 %. On the same substance, we obtained results ranging from 0.00 % to - 1.44 %, giving a mean per cent error of -0.37 %.

From these results, we can say that the type of constant pressure device used as adapted to the Robertson modified Victor Meyer apparatus, and in accordance with the procedure herein set forth, may be successfully used for exact determinations of molecular weights.

VII. BIBLIOGRAPHY

Books

1. Findlay, Alexander: Practical Physical Chemistry. Longmans, Green, And Co., London, New York, and Toronto. (1929).

2. Getman, F. H.: Outlines of Theoretical Chemistry. John Wiley and Sons, Inc., New York (1928).

3. Hodgman, C. D., and Lange, N. A.: Handbook of Chemistry and Physics, 13th ed. Chemical Rubber Co., Cleveland, Ohio.

4. Nernst, W.: Theoretical Chemistry. MacMillan and Co.,Ltd., London (1923).

5. Sherrill, M. S.: Laboratory Experiments on Physico-Chemistry Principles. The MacMillan Co., New York, (1930).

6. Von Richter, V.: Organic Chemistry Text, vol I. Kegan, Trench, Trubner and Co., Ltd., London (1920).

Periodicals and Pamphlets

7. Bott and Momoir: Ber. Deutsch. Chem. Ges, 20, 916 (1887).

8. Chapin: Jour. Ind. Eng. Chem., 4, 684 (1912).

9. Circular of Bur. of Standards, No. 279 (1925).

10. Evans: Jour. Amer. Chem. Soc., 34, 533 (1912); 34, 553 (1912).

11. Harrington: Amer. Jour. Sci., 20, 225 (1905).

12. Henderson: Jour. Amer. Chem. Soc., 35, 958 (1913).

13. Hicks-Bruun: U. S. Bur. Stds. Jour. Research, 5, 575 (1930).

14. MacInnes and Kreiling: Jour. Amer. Chem. Soc., 39, 2350 (1917).

15. Meyer, L.: Ber Deutsch. Chem. Ges., 13, 991 (1880).

16. Meyer, V.: Ber Deutsch. Chem. Ges., 17, 1334 (1884).

17. Ramsey and Steel: Z. Phys. Chem., 44, 348 (1903).

18. Schwartz: Ber. Deutsch. Chem. Ges., 16, 1051 (1883).

19. Weiser: Jour. Phys. Chem., 20, 532 (1916).

VIII. APPROVAL

The foregoing thesis is hereby approved as a creditable study of an engineering subject, carried out and presented in a manner sufficiently satisfactory to warrant its acceptance as a prerequisite to the degree for which it has been submitted. It is understood that by this approval the undersigned does not necessarily endorse or approve any statement made, opinions expressed, or conclusions drawn therein, but approves the thesis only for the purpose for which it is submitted.

Name Judson A. Robertson

Title Professor of Chemistry