ME 450/460

Senior Design Project Report

Automated Fusegrade Testing Machine

Dylan Moore

Natalie Rayfield

Haley Register

Colin Roberson

Peter Trzil

Table of Contents

List of Figures 3
List of Tables 5
Abstract 6
Introduction 6
Background 7
Phase I: Development 8
Phase II: Initial Implementation 15
Phase III: Redesign & Final Implementation 28
Phase IV: Assembly 39
Final Product 43
Future Improvements 45
Gantt Chart & Project Management 45
Conclusions 47
Appendix A: Current Manual Testing Process 48
Appendix B: Matlab Code to Alter Weight/Volume of Brass Weight 50
Appendix C: Friction Calculations 51
Appendix D: FBD's to Calculate/Validate Static Friction 52
Appendix E: Center Driven Shaft Calculations 53
Appendix F: Driven-Roller Motor Calculations 55
Appendix G: Lead Screw Calculations 57
Appendix H: Slider Crank Matlab Code 60
Appendix I: Dumb Motor Code 62

List of Figures

Figure 1: Rough Schematic of Paper Entry and Exit 9

Figure 2: Schematic of Pre-existing Cloth Rolls 10

Figure 3: Schematic of Cloth Assembly Concept with Densitometer 11

Figure 4: Frame without weight or cloth assemblies 12

Figure 5: Rough Schematic of Incremental Paper Process 13

Figure 6: Input Paper Feeder Provided from Lexmark Printer 15

Figure 7: Diagram of Paper Entry Part 16

Figure 8: Model of Paper Redirection from Entry Drawer to Table/Rollers (a) Isometric View (b) View of Inner and Outer Guides 16

Figure 9: Worm Gear 17

Figure 10: Dimensions of Table and Rollers 17

Figure 11: Isometric View of Table with Idler Rollers and Drive Rollers Under Table 18

Figure 12: Bottom View of Table with Idler Rollers and Drive Rollers Under Table 18

Figure 13: Location of Potential Clamps on Table 19

Figure 14: First Clamp Concept to Mount on Table 19

Figure 15: Second Clamp Concept Mounted to Base Plate 20

Figure 16: Example of Slider Crank Mechanism 20

Figure 17: Isometric View of Frame, Weight Assembly without Cloth Roller Concept 21

Figure 18: View Inside Cylinder of Weight Assembly 22

Figure 19: Finalized Schematic of Cloth Assembly 22

Figure 20: Driving Shaft (Collection Roller) 23

Figure 21: Feed Shaft 24

Figure 22: Model of Automated Fusegrade Testing Machine (a) Isometric View (b) Front View (c) Side View 25

Figure 23: Frictional Testing (a) Paper to Cloth (b) Foam Tip to Cloth (c) Paper to Steel 26

Figure 24: Schematic of All Interacting Components During Scrubbing 27

Figure 25: Free Body Diagram of Foam Tip 27

Figure 26: Free Body Diagram of Cloth 28

Figure 27: Final Concept (a) Front Isometric View; (b) Back Isometric View 30

Figure 28: Redirection Piece (a) Front Isometric View; (b) Side View 31

Figure 29: Paper Tray (a) Top View (b) Underside View 32

Figure 30: Torsional Springs (a) Design; (b) Location on Paper Tray (area outlined in red) 33

Figure 31: Top View of Final Paper Tray.....34

Figure 32: Schematic of Cloth Assembly Combined Plate (a) Front Isometric View (b) Front View (c) Back View (d) Top View 37

Figure 33: Machine Frame (a) Side Plate 1 (left side); (b) Side Plate 2 (right side); (c) Base Plate; (d) Back Plate 37

Figure 34: Slider Crank.....38

Figure 35: Motion Components (a) Linear Carriage; (b) Bearing Track.....39

Figure 36: Assembled Redirection Piece (a) Top View; (b) Side View; (c) View with Paper 40

Figure 37: New Slider Crank Location.....41

Figure 38: Combined Plate Revision 43

Figure 39: Tilted Front View of Machine.....44

Figure 40: View of Combined Plate 44

List of Tables

Table 1: Prices of X-Y Tables 13

Table 2: Coefficients of Friction.....26

Table 3: Recalculated Coefficients of Friction 29

Table 4: Key to Figure 27 30

Table 5: Gantt Chart.....45

Table 6: Realistic Gantt Chart.....46

Abstract

Lexmark currently implements a manual process to test the ability of their laser printers to bond toner to paper. Through this process, a fusegrade number is assigned to each sample sheet of printed paper, and this number corresponds to the density of toner that is scrubbed off of each page during the manual process. This process is extremely important as it provides quality management of their printers, but it is very time-consuming and not always easy. This exact manual process has been therefore automated, and this report details the process of designing a machine to achieve this task. Highlights of the final automated machine include: a densitometer, five motors, a roller-driven paper tray, a slider crank, and a combined plate assembly with mechanisms to move both cloth and weight in and out of the test region. All parts have been assembled and programming has been attempted, but due to pressing deadlines, the machine is not currently operable.

Introduction

Perhaps one of the most important measures of a laser printer's effectiveness is its ability to bond the toner to each page. Customers demand that their printers are able to produce page after page of material without smears or imperfections. In order to test the bonding capabilities of their printers and ensure the quality of their product, Lexmark currently uses a manual process to test printed sample pages and determine the fusibility of their printers. To test how well the toned image is affixed to the page, Lexmark prefers a cloth-rub test as it measures both tonal cohesion and adhesion simultaneously. The current process is therefore effective in obtaining accurate fusibility data; however, it is extremely tedious and could easily be automated with a machine and potentially become faster and easier. This machine would replace the need for an employee to perform the action and provide the opportunity for more samples to be processed.

The machine will mirror the current process with only minor changes. Overall, the current machine is a simple hand-powered device consisting of a weight on a linear slide suspended above a smooth metal plate. This process is briefly outlined visually in **Appendix A**. The current process is as follows: An operator affixes the fusegrade sample page to the testing plate with magnets in order to ensure the page does not shift or crinkle during inspection. A special circular cloth patch is then affixed by hand to a protrusion on the bottom of the weight with a tight fitting washer in order to ensure tension remains in the cloth as it is swabbed over the paper sample. The weight is slipped into a pocket in the linear slide mechanism, and then rubbed back and forth across the page until

10 strokes have been achieved. The operator pries the washer off (often with a pocket knife), straightens out the cloth patch, and tapes it to a sample collection page for subsequent grading. This process is repeated for a total of 3 to 6 times in different areas per fusegrade sample page, which means that at most, 80 pieces of cloth are used per sample stack of pages as each sample stack has approximately 20 pages and that therefore the washer is also put on and pried off this many times for one sample stack of pages. There are typically 20 pages in a batch of samples, and a typical battery of fusegrade tests will generate 12-24 batches. Because of this monotonous process, grading a battery of tests in this way typically takes several days of work and is slowed as the operator's fingers often become sore from prying off the washer or the operator has exceeded his or her tolerance for tedium and abandons the process.

Because the exact process and needs of our machine were known and already established systematically, the development of our machine involved developing the best possible concept to match the current process in the most streamlined, efficient way possible. The machine would expedite the process as well as streamline it to ensure that none of the samples exhibit human error.

Background

The core objective of this project is to design a device that automatically tests and records fusegrade samples. The device must be capable of receiving a stack of printed paper samples of various sizes (Letter, Legal, A4, A5, and Statement), indexing them one at a time into position for testing, rubbing the page with a special cloth at the specific force, optically measuring the amount of toner that comes off on the cloth with a densitometer, storing the data so that it can be later analyzed, and ejecting the page from the testing area. This entire process must be able to process a stack of sample pages without any operator interface, except for the initial start of the machine and the switching out of the 20-page paper samples.

The machine must produce the same exact results as the current, manual process. Therefore, the constraints of our design were the mass of the weight used to swab the paper (574.3 grams), the cloth and foam tips, the functionality of the optical densitometer, a circuit box to accommodate 4 motors, and the six test areas from the sample pages produced by the printers.

We were provided a paper dispensing system in the form of a Lexmark printer rolling system as well as cloth rolls, foam tips, a 4-motor circuit board, and photogates.

We learned from our Lexmark contact, Chris, all about the current process and watched the process via Skype in order to better understand it. From this descriptive overview, we were then able to formulate concepts to automate the process. We compared and contrasted them in order to select the concept that had the highest likelihood of duplicating the results of the current process. We then designed a device to implement our chosen concept's process and tweaked the concept slightly to make the design more feasible. Using Inventor and SolidWorks, 3-D CAD models of entire assembly and all components will be produced along with detailed drawings and a Bill of Materials. We will assemble the parts, wire the motors and sensors, and program a motion control card to create a working robot to perform the process without error. Following troubleshooting and fine-tuning of our robot, we will demonstrate our completed product's functionality.

Phase I: Development

When formulating concepts, we first considered the method in which the paper would be swabbed: We considered both moving the table that the paper rests upon and keeping the weight stationary as well as keeping the paper stationary and designing a mechanism to move the weight across the paper. We decided—largely due to efficiency and quality concerns—that it would be best to keep the paper stationary and move the weight to the paper. The main reason for this was because we could not determine an efficient solution to removing the cloth from the stationary foam tip and weight after each swab. We also could not determine a smooth solution to the entrance and exit of the sample page onto a moving table as well as a repeatable method for ensuring that the paper remained secured to the table.

Once we decided to keep the paper and table stationary, we began to conceptualize a process for the entrance and exit of the sample pages as well as how we should secure the paper onto the testing table. The current process used magnets, and we first considered adopting this in our design; however, we could not figure out a completely automated way to take the paper from the stack, place the magnets on each corner, then remove the paper from the area. We considered a vacuum arm that lifted a sample from the stack and dropped it into the testing area where magnets would then be placed on each corner. Following the completion of the testing, the vacuum arm would then suction the sample and move it to an exit area; however, we felt this vacuum process might be too probable for error and malfunction. For instance, the vacuum could accidentally suck up the page as the samples will be different sizes, or it could crinkle the page during its movement.

Also, paper is not heavy enough to fall perfectly in the same place every time, so the release of the page onto the testing area could decrease the precision of the swabbing. Our last concern with this was that multiple arms would make the machine more complicated and potentially cause difficulty in finding clear pathways for the motion of all the robot's components. The solution to ensuring that the paper's testing areas were in the same place every single time was the development of an incremental entrance and exit process that also holds the paper in place. Like a printer, the paper sample would be fed through a set of rollers until the first section of the paper was fully on the testing area. Following the samples of the first area, the entrance rollers would feed the sample the next distance while a set of exit rollers received the first area of the paper. With the exit rollers holding the first approximate third of the paper and the entrance rollers holding approximately the last third, the middle section is secured on the testing area and can be swabbed. Finally, the final section of the paper is moved through the rollers to the testing section, and upon completion, the exit rollers ultimately move it to an exit tray while the next sample page is fed through the entrance rollers. A rough schematic of this incremental process with the rollers to input the paper is shown below in **Figure 1.** This incremental process would be incredibly efficient as well as able to handle the multiple sample page sizes. The testing head would therefore not have to move much as the actual testing area is small in comparison to the size of the paper.

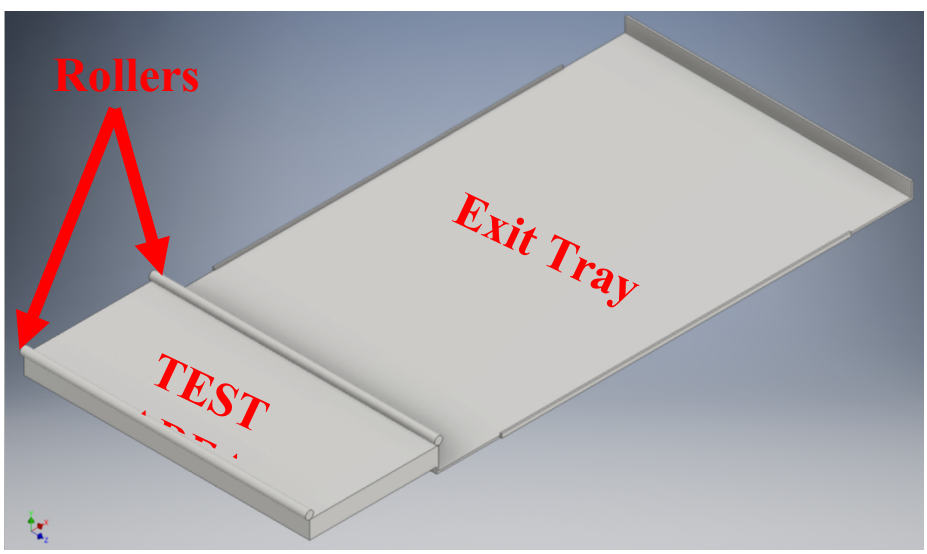

Figure 1: Rough Schematic of Paper Entry and Exit

We then began to formulate ideas for how to best perform the swabbing function. Because the cloth must be orientated orthogonally for each swab so that the friction component is equivalent

across all samples, we decided that the current, circular cloth samples could not be used in an automated process since they do not come in perfectly orientated stacks. With the manual process, the associate can physically orient the cloth when placing it upon the foam tip and ensure that it is orthogonal each time. However, unless we included a device to read the orientation of the cloth, we could not think of a plausible, simple solution for the correct machine-orientation of the circular cloth samples. After discovering that the cloth used in this process is delivered to Lexmark in spools (see **Figure 2**) before it was manually cut into circles, we developed a cloth movement mechanism that abolished the intermediate step of cutting the cloth.

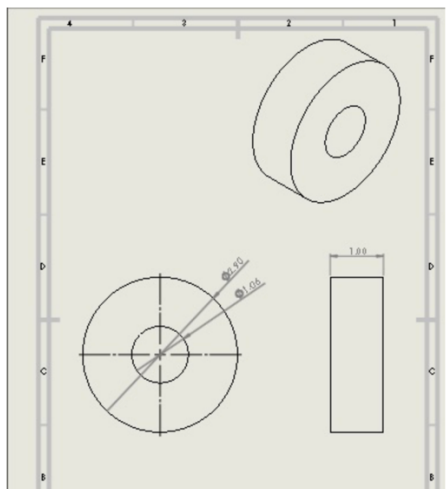

Figure 2: Schematic of Pre-existing Cloth Rolls

The cloth mechanism would also hold the cloth in enough tension to abolish the tedious motion of placing and removing the washer that held the cloth in place. We tested the force required to break the cloth and found it to be an extremely durable material, only breaking with a tensile force of approximately 19.2 kilograms. The cloth on its spool measures 55.1 grams when all cloth is present. The inner diameter of the spool in 2.69 cm, while the outer diameter is 7.37 cm. With this durability, we created a cloth-dispensing system that also solved the problem of how we were going to automate the densitometer testing. A spool of cloth will be located on one side of the machine and run over the testing area, under the weight and foam tip assembly arm. The cloth will span across the testing area and will be held in tension by another set of rollers on the opposite side of the cloth roll. As the weight assembly is moved onto the cloth, the entire weight assembly, frame, and cloth assembly will move over the stationary table and paper to obtain a cloth swab. The set of rollers will then carry the cloth sample and redirect it vertically to be tested by the

densitometer, where the sample will be obtained. Lexmark asks that all densitometer readings be done in front of a white backdrop to ensure that the background is not biasing the sample. A sketch of this is shown below in **Figure 3.** This figure illustrates the span of the cloth across the testing area and how the densitometer will scan it; the cloth will then continue to be rolled as more paper is tested, and a disposal spool will roughly roll up the used cloth so that is can be more easily disposed of.

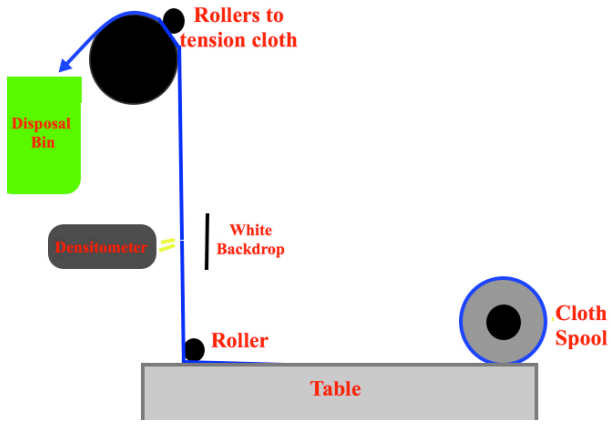

Figure 3: Schematic of Cloth Assembly Concept with Densitometer

We then began to consider the best way to move the weight on and off the cloth and paper samples. We needed a fluid motion that was quick and could accurately place the weight onto the paper samples. We decided to use a solenoid to lift the weight and foam tip up and down as this device offered a relatively inexpensive way to perform the motion. We also felt that this route would be much easier to debug in the future as it requires little programming or motion. The solenoid and weight assembly would be mounted to a frame that would allow it to move left and right with a rack and pinion as the paper is iterated in a perpendicular motion below on the stationary table. We felt that this would be the most effective way to test the sample pages' six different spots.

We began to implement this fully developed concept and design pieces in SolidWorks. **Figure 4** displays the beginnings of our entire frame with the moving weight and cloth assemblies. The solenoid and weight assembly is not shown in the schematic, but it would be moving across the top of the frame in a motion parallel to the shorter side of the paper. The cloth assembly would span across the bottom of this frame, and the rollers would be mounted to it in order to make the weight and cloth assemblies move in unison as the scrubbing motion is occurring.

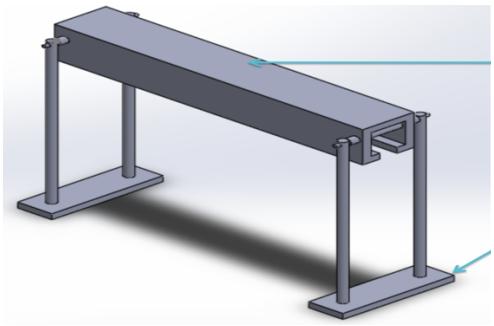

Figure 4: Frame without weight or cloth assemblies

However, after diving deeper into the modeling of our design and drawing a free body diagram of the assembly to check torques and forces, we began to worry that the entire motion of the weight assembly and cloth assembly on our frame might cause the machine to be too unstable as there was a large amount of weight at a significant height moving rapidly back and forth across the table. The quarter inch rods used in the frame to support the rack and pinion and the weight and cloth assemblies would not be able to handle the moments placed upon them during the motion. Additionally, the machine could rock or shift across the table during its process, which was also a major concern. Because this could completely derail the functionality and effectiveness of the machine, we went back to the drawing board with our design and began to revisit the idea of moving the table rather than the weight and cloth assemblies.

We began to research premade x-y tables, but unfortunately, we found them to be way too expensive for our needs. Before realizing this though, we designed a new table concept to lie on top of the x-y table A rough schematic of this incremental process with the rollers (located on top of the table) to input the paper is shown below in **Figure 5.** This redesigned incremental process would be incredibly efficient as well as able to handle the multiple sample page sizes. The paper would be fed into the first set of rollers and then be driven down the length of the table until it gets to the last section, which is where the testing will occur. The rollers are spaced so that they can accommodate the smallest piece of paper, and the testing area will be approximately 4”. The weight and cloth assemblies would be located in this testing region only.

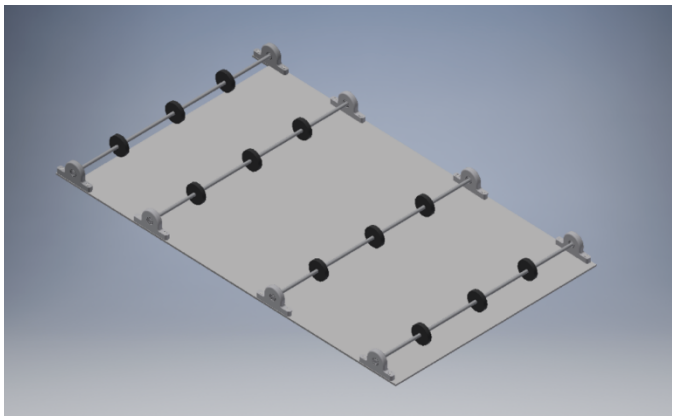

Figure 5: Rough Schematic of Incremental Paper Process

The cost from the x-y tables stemmed from their high precision and the fact that we needed our table to move the width of the largest piece of paper, or approximately 8 inches and also support a weight of at least 20 pounds during its motion. **Table 1** below shows our research into tables that would be both large enough to hold the largest paper size, strong enough to support the weight, and move enough to accommodate enough scrubbing to obtain a valid sample.

Table 1: Prices of X-Y Tables

Item	X-Axis Stroke Length (mm)	X-Axis Screw Lead (mm)	X-Axis Motor Mounting Position	X-Axis Motor Interface	Y-Axis Stroke Length (mm)	Y-Axis Screw Lead (mm)	Y-Axis Motor Mounting Position	Y-Axis Motor Interface	Combining Bracket	Price (USD)	Quantity Discounts	Stock Status	Add To Cart
NSK-RG-MS-0251-SN-0101-LA	250	10	Straight	None	100	10	Left	Metric	Included	$6,207.00	view here	Typ. 45 Days	
NSK-RG-MS-0352-SN-0201-RB	350	20	Straight	None	200	10	Right	Nema	Included	$6,574.00	view here	Typ. 45 Days	
NSK-RG-MS-0451-SN-0301-RA	450	10	Straight	None	300	10	Right	Metric	Included	$6,620.00	view here	Typ. 45 Days	
NSK-RG-MS-0551-SN-0401-LB	550	10	Straight	None	400	10	Left	Nema	Included	$6,971.00	view here	Typ. 45 Days	
NSK-RG-MS-0952-SN-0101-LB	950	20	Straight	None	100	10	Left	Nema	Included	$7,030.00	view here	Typ. 45 Days	
NSK-RG-MS-0952-SN-0501-RA	950	20	Straight	None	500	10	Right	Metric	Included	$7,411.00	view here	Typ. 45 Days	

Because a $6000 custom table was out of the price range, we brainstormed with the Lexmark team to think of a viable solution. We ultimately decided to design our own testing table surface that moves in one direction, we will call it—from now on—the x-direction, or the direction parallel to the long side of the paper, and then iterate the paper through sets of idler rollers like our original design. The idler rollers will guide the paper over the table and to the test area. This paper incremental movement would fulfill the need to test all six areas of the paper as well as test multiple pages without operator interference. To create the table, we found several options on McMaster-Carr. We decided to employ a linear motion carriage and construct our own table to move it in the x-direction to make the swabbing motion needed for the cloth. A thin table surface would be composed of 1/16" stainless steel mounted on half an inch of 20% glass-filled acetyl, per design specifications from Lexmark. To save cost, rest of the surface would be made of sheet metal. The

linear motion carriage would provide the motion of the table necessary to test the sample pages. The table will move 1 inch in both directions with the help of a slider crank "dumb" motor in order to make the table move enough to obtain a valid fusegrade sample for testing.

A new frame will be designed to hold the solenoid and weight assembly along with the same cloth assembly as before. One design consideration for this cloth assembly is that the cloth will need to be routed such that it can only contact the paper at the rub tip. Everywhere else the cloth will need to be pulled up and away from the page to keep it clean and not bias a sample. The routing path will need to be relatively easy to access for loading/threading a new spool of cloth. In addition, during the indexing, it will need to route the cloth such that it does not drag across the foam tip, thereby wearing away at the tip over time. In other words, we must ensure that the weight assembly is fully lifted away from the cloth so that the foam tip will not be rubbed. Since this entire assembly will not be moving rapidly in the x-direction, we also decided to keep the lead screw at the top of the frame to move the solenoid and weight assembly in the y-direction into positions one and two on the sample pages. The solenoid would move to the necessary position on the paper but remain stationary during the testing in order to prevent the shifting or unsteadiness that was of great concern with our original design. The cloth would still roll across the moving table, be lifted for testing by the densitometer, and loosely rolled onto a disposal roll. The cloth assembly is our most complicated mechanism for this robot as the cloth alignment with the densitometer must be within the aperture of the device in order to obtain a reading.

As stated initially, the biggest problem that we saw with moving the table was how to dispense each sample page onto the testing surface as well as how to remove it. Utilizing the paper feeder and storage drawer that was given to us (shown below in **Figure 6**), which directs the paper upward, we toyed with the idea of redirecting the paper onto a horizontal testing surface, but due to motor constraints on our given electric box, we must rework our design to include an attachment rather than rollers to redirect the paper up to the table.

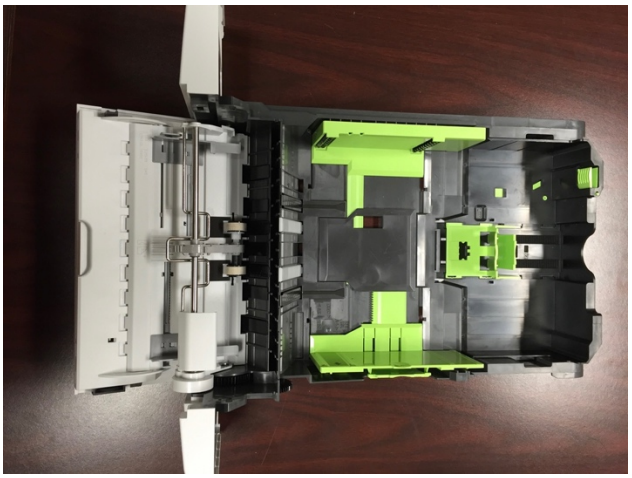

Figure 6: Input Paper Feeder Provided from Lexmark Printer

Moving forward with this design, we feel confident that it will properly perform the necessary task. One area of major concern moving forward is the cloth indexing and alignment with the densitometer. Our current design will hoist the cloth samples to a testing area; however, at this time, it is unknown within what tolerance the densitometer will properly read the sample and obtain the fusegrade data. This could potentially be a major issue with our design or could make the programming of the cloth assembly difficult for our experience level. As of now, we see this as the only major issue of our design. Obviously, as we moved to Phase II and move onto Phase III in the future, we are going to run into issues with our designs that may require additional parts, such as clamps, frictional additions, etc., in order to eradicate the issues hindering our robot's performance.

Phase II: Initial Implementation

Using the paper entry device given to us by Lexmark, we began construction of the incremental entry and exit of the paper onto the table and testing area. The entry device shown previously in **Figure 6** will hold our 20 sample pages and redirect the paper to the tabletop, which will rest at an undetermined height above the paper entry part.

We only need the left side of this piece to perform the necessary function. **Figure 7** shows a diagram of how we will use this printer part to hold and redirect our paper. A motor will drive this motion.

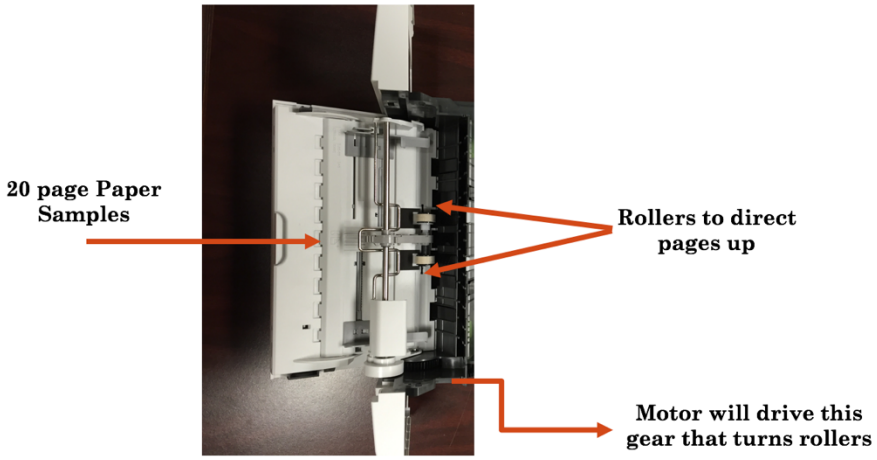

Figure 7: Diagram of Paper Entry Part

Due to motor constraints, the paper cannot be redirected by a motor. Therefore, we will design an attachment to go onto the paper entry device and the table to redirect the paper. **Figure 8** shows a model of this attachment. The idea is that this part will slide onto the paper entry device and the arch will be at an angle such that the paper glides through the inner and outer guides and onto the table, where it will be picked up by the rollers. The slit between the inner and outer guides extends underneath the top plate of the piece; however, this is not shown in either of the views. The table will sit underneath this top piece in order to provide the most control for the paper's motion. We are toying with the idea of using a photogate at the end of this paper redirector that the end of the paper will trigger as it passes. This photogate will signal the rollers within the paper entry part to stop moving and tell the rollers on top of the table to grab the paper and begin pulling it through, starting the testing process.

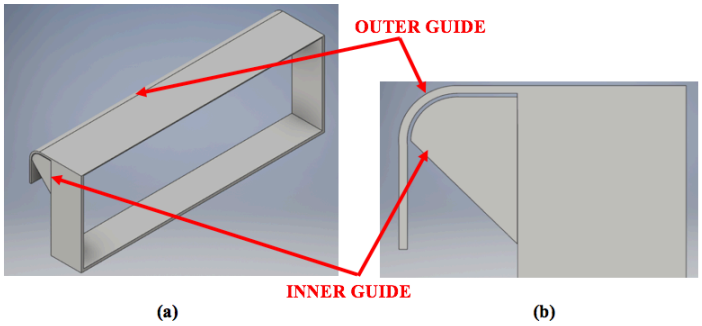

Figure 8: Model of Paper Redirection from Entry Drawer to Table/Rollers (a) Isometric View (b) View of Inner and Outer Guides

When designing the table and rollers in SolidWorks, we had trouble determining how a motor would effectively drive the rollers and increment the paper across the table and in and out of the test area. We decided to drive each set of rollers underneath the table with a worm gear, which is shown below in **Figure 9.**

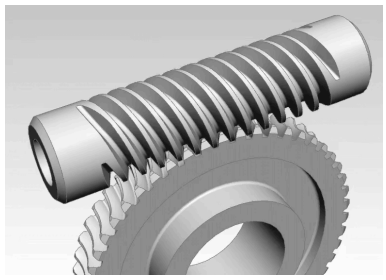

Figure 9: Worm Gear

Since there are four sets of rollers, there will be four worm gears, which will be on one shaft and driven by a motor mounted on the underside of the table. Depending on the final constraints of our design, this motor will drive one of the gears on the rollers. We need 4 sets of rollers to accommodate the smallest paper length, which is about 5.5”; therefore, our rollers sit 5” apart, except the last two surrounding the test area are 4” apart. A schematic of this is shown below in **Figure 10**, where the orange lines indicate where the rollers will be placed.

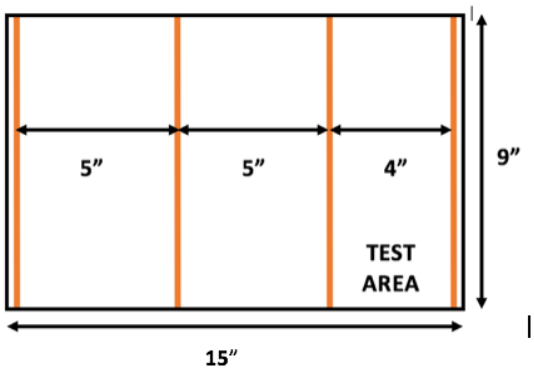

Figure 10: Dimensions of Table and Rollers

The four sets of rollers will be on shafts that span longer than the table in order to catch the worm gear and turn when the motor is activated. The set of idler rollers will be placed on top of the driving rollers to guide the paper through. There will be a clearance of .004 inches (the average thickness of a piece of printer paper) between the driven bottom rollers and the idle top rollers. A section will be cut out of the table to allow for these rollers to meet. The SolidWorks model of the

entire table with the rollers is shown below in **Figure 11.** The 4” test area is located on the right side of the figure, with the 20% glass-filled acetyl mounted below the surface.

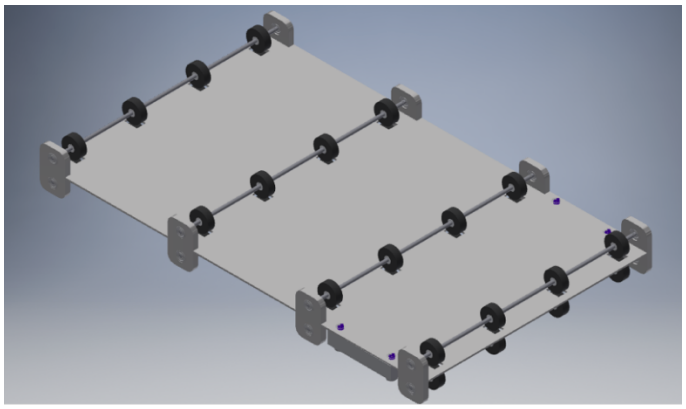

Figure 11: Isometric View of Table with Idler Rollers and Drive Rollers Under Table

Figure 12 displays the underside view of the table. Again the test area is located on the right side of the figure. The worm gears, shafts, and rods to drive the rollers on the sides are not shown in this figure.

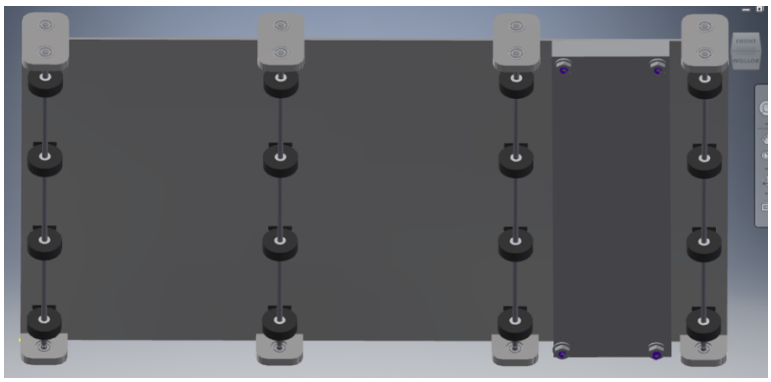

Figure 12: Bottom View of Table with Idler Rollers and Drive Rollers Under Table

Because we worried about the movement of the paper during testing, in the future, a set of clamps will potentially be placed on either side of the testing area. **Figure 13** shows where the clamps will be with respect to the table and testing area.

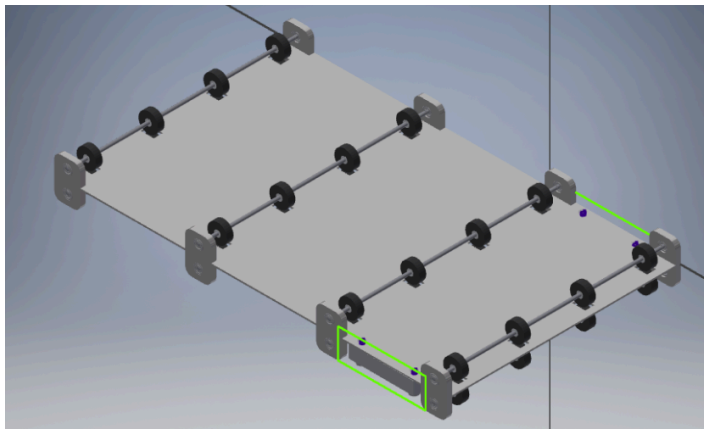

Figure 13: Location of Potential Clamps on Table

The clamps will hold the paper in place and ensure the paper will not slip. Pending further calculations, we will decide whether or not the paper needs to be clamped in order to prevent slipping during scrubbing. As of now, we are thinking that we will implement another set of small solenoids to lift the clamps. We have formulated two different ideas. The major difference between them is that the first set of clamps is mounted to the table, while the second set is mounted to the base plate and thus will not be moved by the table. **Figure 14** below shows the first set of clamps. The solenoid will be attached in square off the plate.; the solenoid will turn on with a photogate and push the left side of the clamp up and the right side down on top of paper. The material on the right side of the clamp could be rubber to prevent sliding, or it could be a small magnet that meets another on the testing surface, depending on if solenoid could overcome this magnetic force and lift the clamp off of the page.

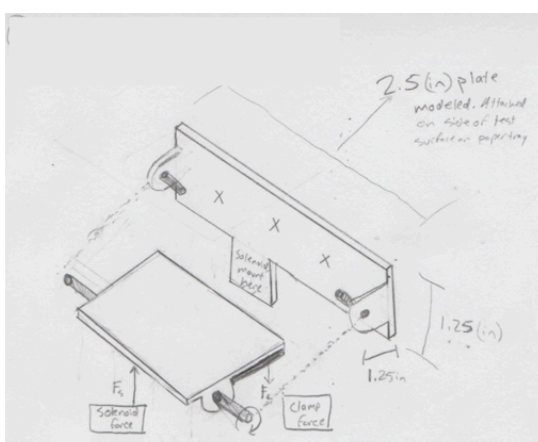

Figure 14: First Clamp Concept to Mount on Table

The second clamp concept would mount to the base plate of the machine. **Figure 15** shows a schematic of the second clamp. The solenoid will attach to the clamp mechanism, and the same

idea for rubber or magnets goes for this concept. Rod 1 will hold the solenoid, which will fix to the clamp part and also translate. The clamp will rotate around the rods. Again, these two clamp designs are pending the frictional calculations to determine how much force is needed to hold the paper stationary during motion.

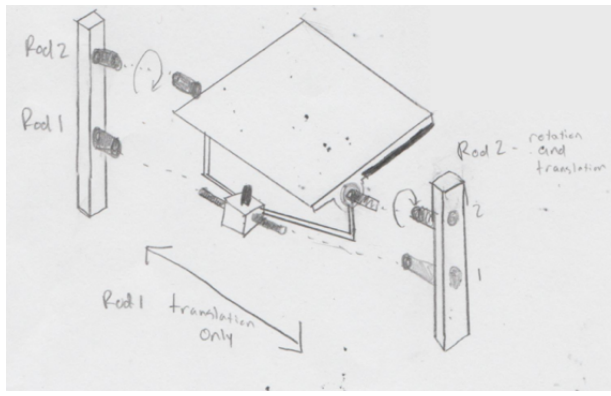

Figure 15: Second Clamp Concept Mounted to Base Plate

Because we are already planning to use all four available motors, the table's x-direction motion will be created utilizing a basic slider crank "dumb motor". A schematic of this mechanism is shown below in **Figure 16.** The slider crank will be signaled *on* or *off* and will be fully designed following the acquisition of the exact weight of the table and all of the attached components. At this point in time, we do not know exactly where the slider crank will be located, but it will move the table 1" inch in either direction to produce the motion necessary to scrub the cloth on the sample.

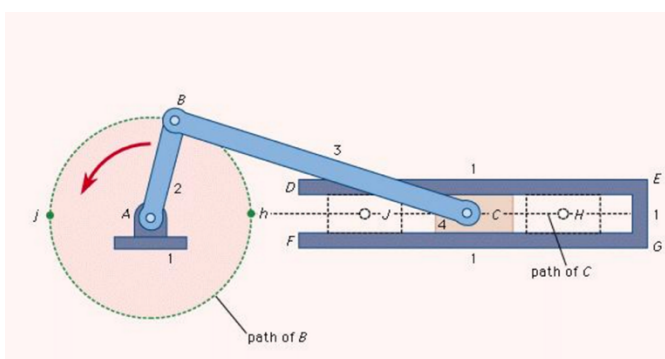

Figure 16: Example of Slider Crank Mechanism

The frame has also been redesigned to accommodate better the weight and cloth assemblies. Since the weight and cloth assemblies will remain stationary during testing, the torque and induced motion on the frame is less of a concern. The weight assembly will translate in the y-direction, or

the direction parallel to the short side of the paper into each of the three positions for sampling. The weight assembly will travel over a lead screw to each spot, stop, and the pull solenoid will be demagnetized and dropped onto the indexed cloth and paper. The slider crank will then turn on and move the table to obtain a sample. The solenoid will then be re-magnetized to lift the weight off of the cloth, as the foam tip located on its base cannot be compressed in order to maintain its shape and functionality. The cloth assembly will run underneath this frame as indicated by the rollers on either side. The quarter-inch rods used in the frame are now much shorter and will therefore be able to hold better the weight of the weight and cloth assemblies. The solenoid and weight assembly will be attached with two "horseshoe" clamps that will hug the cylinder surrounding the weight. This cylinder also prevents the weight from rocking as it is raised and lowered by the solenoid. **Figure 17** displays the frame and weight assemblies, including the lead screw, which will be driven by a motor and allow the solenoid to translate into testing positions.

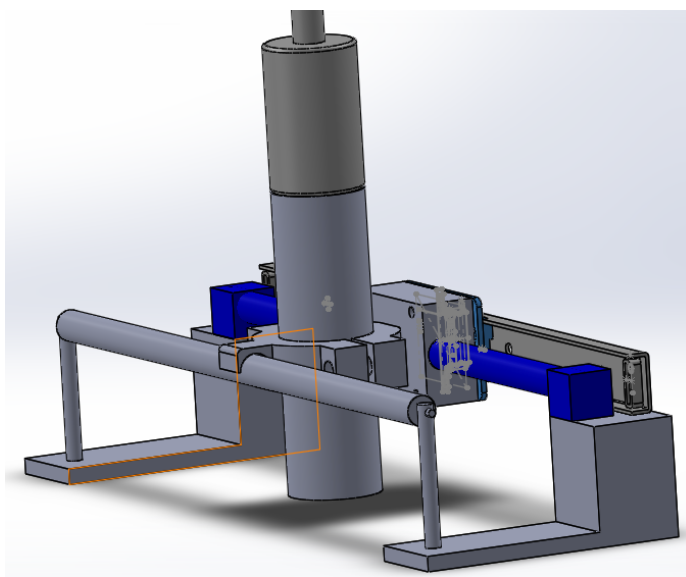

Figure 17: Isometric View of Frame, Weight Assembly without Cloth Roller Concept

A close up of the solenoid and weight assembly is show in **Figure 18**. This shows what is happening within the cylinder, which is simply the rise and fall of the weight onto the paper and testing surface by the solenoid. The brass weight will be exactly 574.3 g, but its size can be manipulated. A Matlab code in **Appendix B** shows the calculations and determinations of the length and width of the brass weight, which drives the width and length of the cylindrical casing.

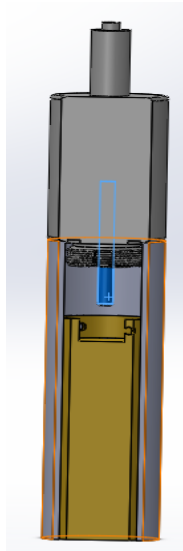

Figure 18: View Inside Cylinder of Weight Assembly

The cloth assembly will still run the width of the table through rollers on either side as the previous figure of the frame indicates. An overview of this finalized schematic is shown in **Figure 19.**

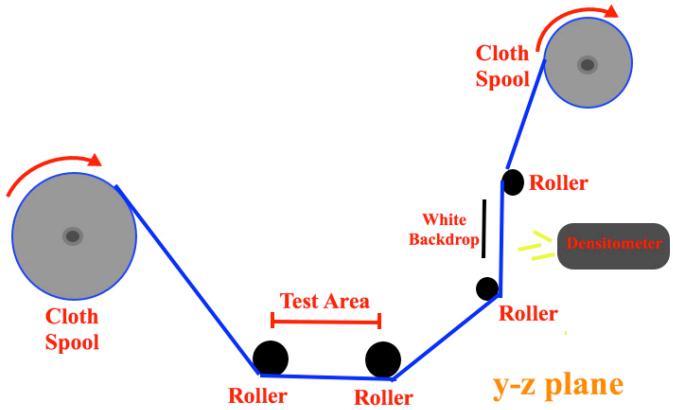

Figure 19: Finalized Schematic of Cloth Assembly

The cloth assembly must pull the cloth through to index it for testing and then the rollers must hold it in place with enough tension in the cloth so that it does not slip during testing. Currently, we are working on figuring out a way to keep this tension in the cloth using the rollers without interfering with the pulling of the cloth through the machine as it goes from its original spool, to the testing area, to the densitometer, to the collection roll. We are looking at utilizing a band brake to create permanent tension in the cloth, but we are still working on the calculations behind it. Ideally, the motor would be powerful to overcome the tension created by the band brake and pull the cloth through when powered on. This motor that will drive the cloth through the entire process has to be

one of 8 motors and will be selected following determination of how much tension will need to be in the cloth so that it doesn't slip. We are also researching the idea of using a magnetic clutch or a Pulse-Width Modulated (PWM) Signal to aid the motion we are attempting. The cloth assembly is the beast of our entire design, and we are having the most difficulty figuring out how to implement our design.

The cardboard inner spool that comes with the cloth rolls is also creating issues in our design as it does not have enough friction to not spin on the shaft. We need the spool not to slip so that the cloth efficiently unrolls as it is pulled. We are looking into using washers with teeth to dig into the cardboard or flame spray, but we still lack a solution to this issue.

So far, we have designed two shafts for the assembly. The first is the driving shaft for the collection roller, or the roller that will collect the cloth as it is sent through the test area and the densitometer. **Figure 20** displays an isometric view, and the blue highlighted piece is the part that will connect to the frame. The design for this shaft began with a shaft size that would fit the cloth spool. The wing nut on the right side of the shaft will allow the spool to be easily removed from the shaft as well as tighten a toothed washer against the cardboard inner spool of the cloth to essentially make the shaft and cloth spin as one. The left side includes the way in which the shaft will be connected to the frame as well as the extrusion in a D-shape to fit the gear from the driving motor.

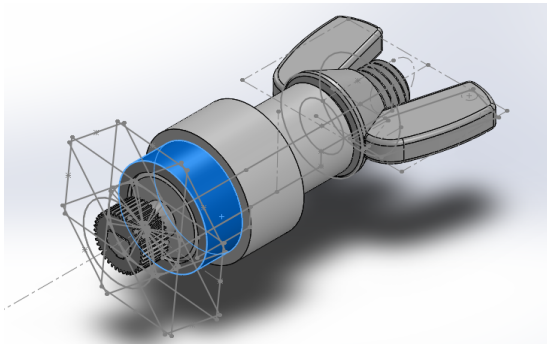

Figure 20: Driving Shaft (Collection Roller)

Figure 21 shows the second shaft, which is the feed shaft. Again, a wing nut is implemented to secure the cloth spool and push a teethed washer against the inner cardboard in order to make the cloth spool and shaft move as one. This shaft will not be driven by a motor, but will move when the collection roller begins to move.

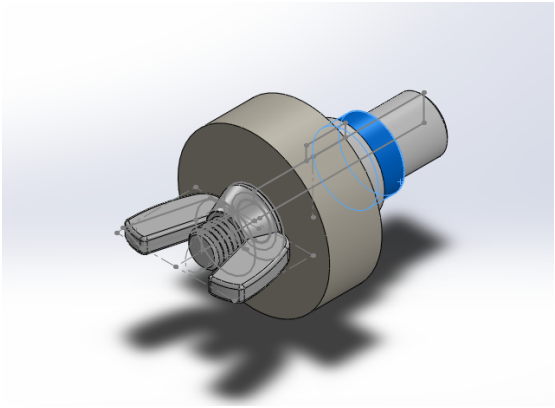

Figure 21: Feed Shaft

There is much work to be done with the cloth assembly. The greatest issue comes from the tensioning of the cloth. Once this is done, a free body diagram can be constructed, and a motor can be chosen from the calculated forces.

A master assembly was constructed with all of the parts that we have created and described to this point. Different views are shown in **Figure 22**. The input paper feeder could not be added because the SolidWorks file sent from Lexmark was too large to open on our computers. The cloth assembly is shown as it currently stands, which is far from being completely modeled. These schematic should give an understanding of our concept and how it will work together to perform the task.

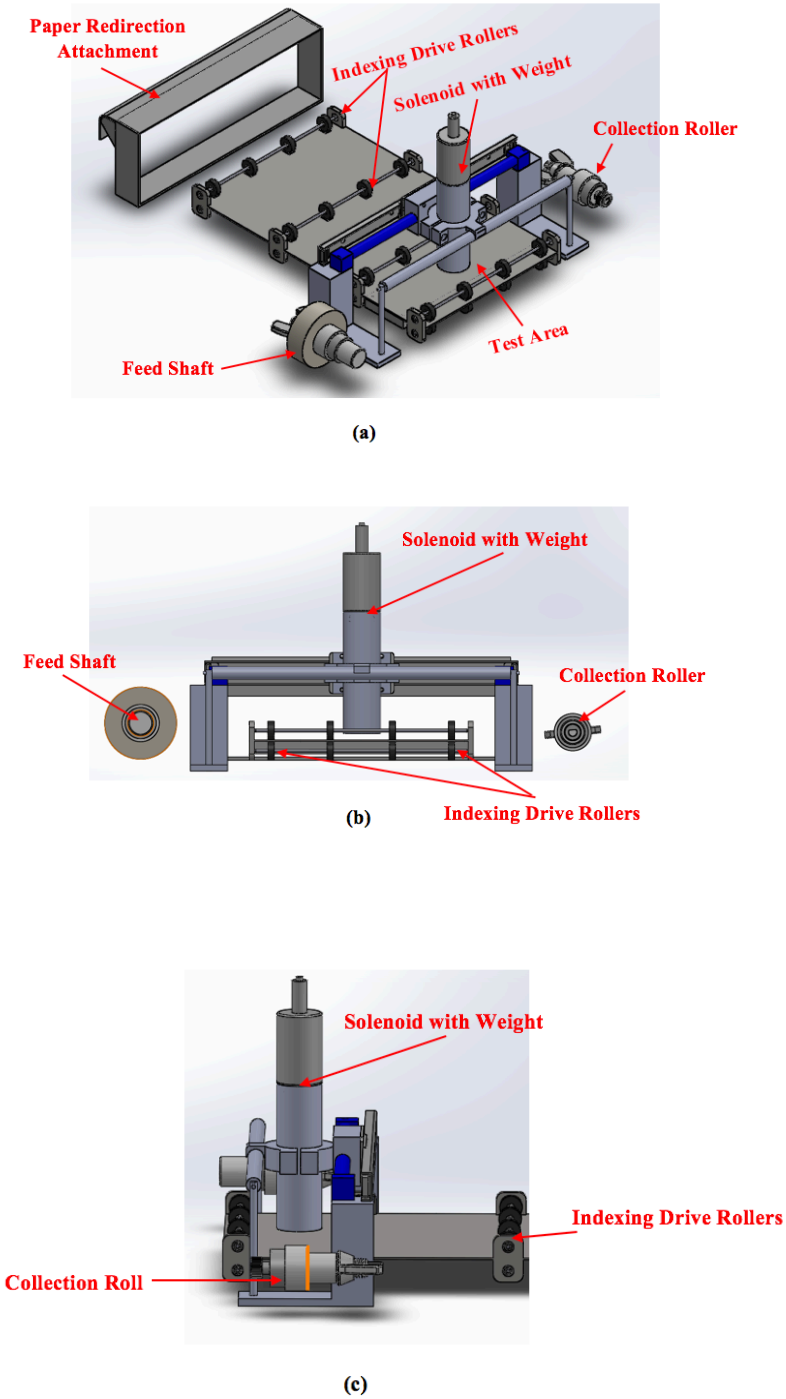

Figure 22: Model of Automated Fusegrade Testing Machine (a) Isometric View (b) Front View (c) Side View

To create our free body diagrams to ensure our concept would work, we first calculated the coefficients of friction between the cloth and ceramic, the foam tip and the cloth, the cloth on the paper, and the paper to steel. The calculations were performed using equipment from Matt

Nalepa's lab. The testing can be observed below in **Figure 23**. The calculations are summarized in detail in **Appendix C**.

(a) **(b)** **(c)**

Figure 23: Frictional Testing (a) Paper to Cloth (b) Foam Tip to Cloth (c) Paper to Steel

Using this frictional data, we were able to solidify our free body diagrams and determine the necessary movement of our assemblies and motor requirements. The coefficients of friction were averaged for each trial and summarized below in **Table 2**.

Table 2: Coefficients of Friction

Materials	μ
Cloth on Ceramic	0.116
Foam Tip on Cloth	0.307
Cloth on Paper	0.388
Paper on Steel	0.216

Figure 24 shows a schematic of the components of our design that we broke apart to determine the static friction during the scrubbing motion.

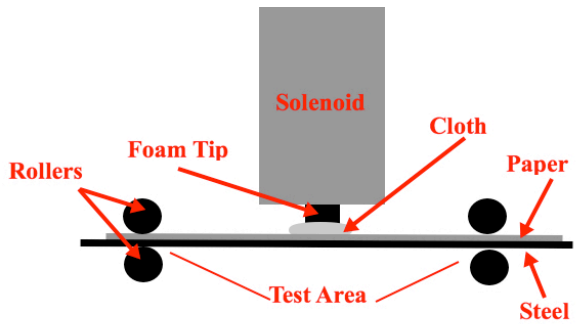

Figure 24: Schematic of All Interacting Components During Scrubbing

A free body diagram of the foam tip was first constructed, and it is shown below in **Figure 25.** The mass of the weight is indicated by $\mathbf{m_w}$, the frictional force between the foam tip and the cloth is indicated by $\mathbf{F_{f\ f\text{-}c}}$, and $\mathbf{F_H}$ is the holding force between the weight and the foam tip, which is assumed to be equal and opposite to whatever force is pulling on it as it will not detach from the weight during scrubbing. Using the derived coefficients of friction, the frictional force between the foam tip and the cloth was found to be 1.73 Newtons. The complete calculations of this are attached in **Appendix D**.

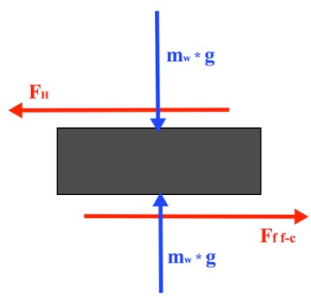

Figure 25: Free Body Diagram of Foam Tip

The free body diagram of the cloth was constructed and is shown below in **Figure 26**. This free body diagram shows the frictional force from the foam tip opposing the frictional force of the paper. The total frictional force between the cloth and paper was found to be 2.19 Newtons. Again, see **Appendix C** for the in-depth calculations.

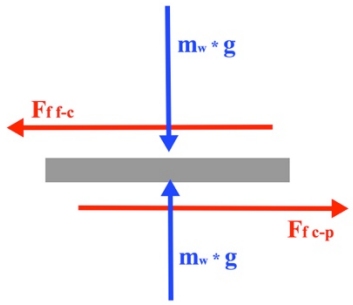

Figure 26: Free Body Diagram of Cloth

To our dismay, these static frictional calculations indicate that the cloth will slip from the foam tip as the frictional force between the cloth and foam tip is less than the frictional force between the cloth and paper. This indicated that our scrubbing motion would not produce adequate samples.

Phase III: Redesign & Final Implementation

Following our presentation with Lexmark in December, we hit a major wall in regards to our entire design. The major issue was that our friction calculations presented an issue that would null the entire design concept: The foam tip and cloth were found to slip and therefore not able to allow a valid sample. It was also determined through consulting with the Lexmark group that the worm gear configuration on the paper tray would have significant backlash and be unable to move the paper sample into each precise place for testing. The design-breaking problem, however, was the cloth to paper slippage, so we began to reevaluate our entire design. It was also decided (due to time-constraints and the fact that we were almost at ground zero) to only make our machine to test standard 8.5" by 11" paper, not various paper sizes as requested before.

After discussion and reevaluation of our slim timeframe, our current resources, and the in-progress individual components of the design, we created a new design that both uses as many components from our past concept and that solves the friction, clamping, and gear backlash issues. We decided to keep with the original design concept, but rotate the cloth assembly 90° so that the cloth is now scrubbing in the same direction as the table. In summary of the new design, the table would still move back in forth in the y-direction via a slider crank, the weight assembly would still move up and down with a solenoid and position itself in the x-direction with a lead screw, and the paper would still be redirected and iterated through a table of now only 3 sets of rollers. These components have been attuned to fit the new design and solve the other issues of our original

concept (such as the problems with clamping and worm gears). More detail in these areas is to follow in this report, but the 90° rotation of the cloth assembly solved the frictional issues of our concept.

To prove this revision, we redid our frictional tests as well as had Chris Kuharik (our Lexmark contact) perform the current manual testing process without the washer that currently holds the cloth in tension on top of the foam tip (See **Appendix A** for a schematic of the current manual process). Chris was able to determine through this non-conventional experiment that the cloth would neither slip on the foam tip nor paper without the use of the washer to tension the cloth. Because the plate is rotated 90°, friction is not an issue as everything is moving in the same direction; however, this was still great news in terms of our new concept. The results of the new friction tests are summarized for reference below in **Table 3**. From this table, the friction between the foam tip and the cloth is greater than the cloth on the paper; therefore, there will be no slippage during scrubbing, regardless we altered our design so that the motion is all in the same direction.

Table 3: Recalculated Coefficients of Friction

Materials	μ
Cloth on Ceramic	0.116
Foam Tip on Cloth	0.440
Cloth on Paper	0.360
Paper on Steel	0.216

The new and final concept is shown below in **Figure 27**. The major design components are numerically labeled and will be discussed in detail throughout the remainder of this report. The key to the figure is shown in **Table 4.**

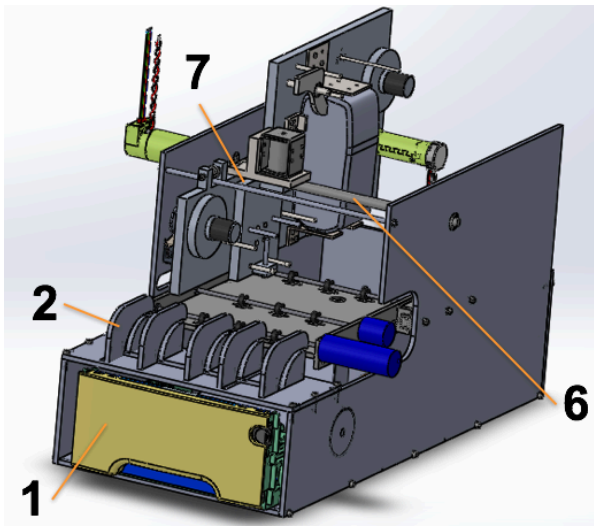

(a)

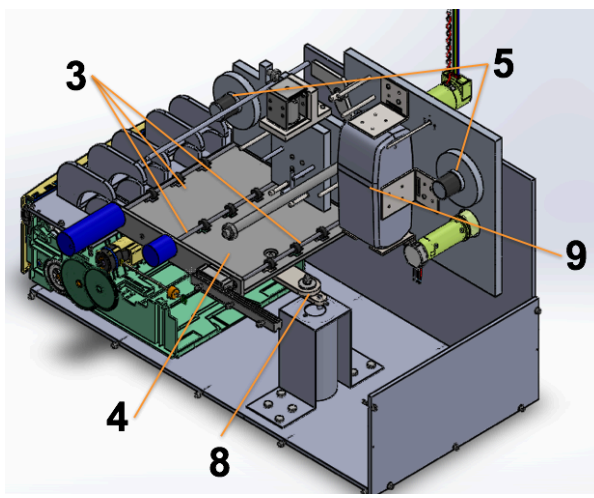

(b)

Figure 27: Final Concept (a) Front Isometric View; (b) Back Isometric View

Table 4: Key to Figure 27

Number	Component Name
1	Storage Drawer
2	Redirection Piece
3	Drive Rollers
4	Test Area
5	Cloth Spools
6	Lead Screw
7	Weight Assembly
8	Slider Crank
9	Densitometer

Moving through **Figure 27**, in the new and final concept, the 20 sample sheets are still placed in the original storage drawer, which was taken from a Lexmark inkjet printer (revisit **Figure 7**). The mechanisms already within this drawer allow for the movement of each page from the stack into a vertical position. The inner drawer was removed as well as the gear drive train so that the motor could be connected to the drawer. The first motor is used to control this storage drawer, and the motor is turned on to roll the first page up and into the redirection piece.

Because the steepness of the curve in the original design of the redirection piece would likely cause paper jams and not perfectly align each page, a new redirection piece was constructed. It consists of 5 individual fin pairs that are separated at their end approximately 4.5 mm, which is slightly larger than the thickness of a standard sheet of paper. The new redirection radius is approximately 45 mm, and the five fin pairs can be observed below in **Figure 28**. The five separate fin pairs also make the redirection piece more easily manufactured, as a waterjet can easily cutout the pieces. These fin pairs screw into a slotted base plate, and the entire redirection piece will be located directly above the storage drawer and screwed into the side plates of the machine's frame.

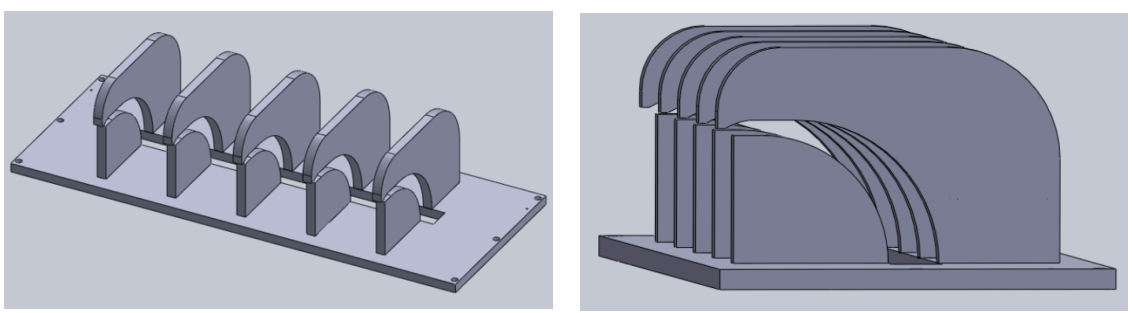

(a) **(b)**

Figure 28: Redirection Piece (a) Front Isometric View; (b) Side View

After being lifted and redirected, the first set of three driven rollers picks up the sample page. A photogate senses the paper as it moves to through the redirection piece and signals the motor to turn on the drive rollers on the paper tray. Before continuing the process of the paper from this point, the design of the entire paper tray will be discussed. Like the previous designs, the paper tray uses an incremental process to move the sample sheet through the test area. The entire paper tray consists of a 254-mm-long metal surface with three sets of rollers. The rollers are spaced 45 mm apart from the center set. The Test Area refers to the 45 mm surface between the second and

third set of rollers, and this is where the scrubbing will occur. **Figure 29** shows a top view of this piece so that the roller locations can be observed.

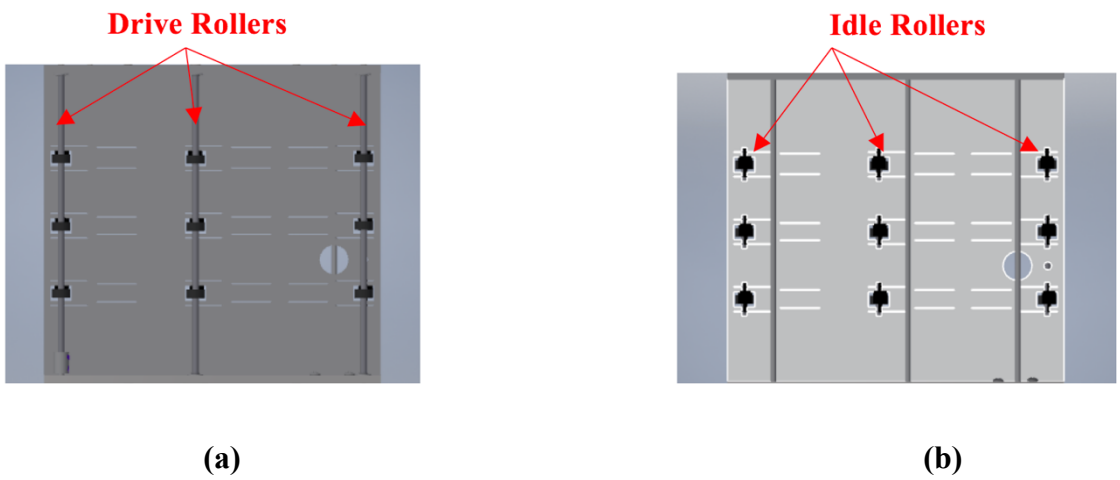

Figure 29: Paper Tray (a) Top View (b) Underside View

From the previous figure, it can be seen that there are material cutouts at each roller location. Like the last paper tray design, driven cloth rollers will be located on top of the table, and idler rollers will be located directly beneath them, on the underside of the tray. Double-torsional springs have been designed to add a 4.5-oz upward force on each idler roller, thus placing this force on the sample page as it sits between the idle and drive rollers. The force from the double-torsional springs solves the problem of the clamping issue described earlier. Given space constraints, it was extremely difficult to design clamps on either side of the Test Area. The double-torsional springs were found to prevent the page from slipping or rotating during scrubbing without the need to be programmed, not take up a significant amount of space, and not interfere with any other component of our design like many of our other clamp concepts. **Figure 30** shows the torsional spring as well as its location on the underside of the table in the slots around and on the idler rollers.

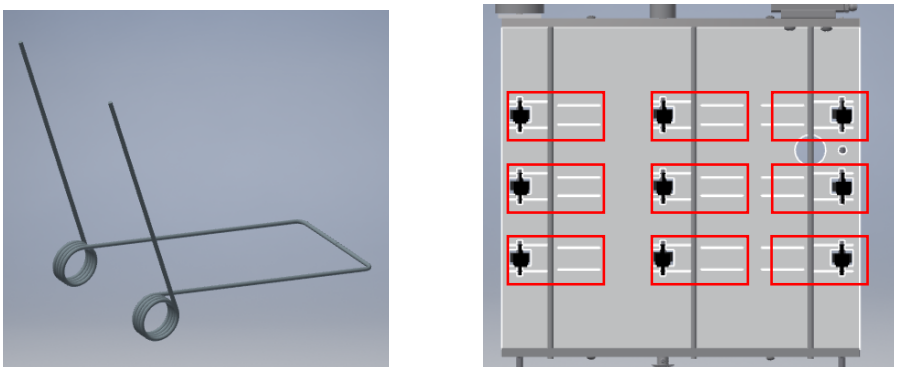

Figure 30: Torsional Springs (a) Design; (b) Location on Paper Tray (area outlined in red)

The shaft size of the driven rollers is 5 mm, and its size was calculated using beam analysis on the center shaft to ensure no bending would occur with the added weight by the double-torsional springs on the idler rollers that are located on the underside of the tray. These calculations are summarized in **Appendix E**.

The driven cloth rollers work through the implementation of a motor and timing belt pulley system. The left shaft is driven by the motor and it moves the other two shafts using the belts and pulleys. A magnetic clutch was added to the center shaft to increase the precision of the timing belt system and prevent motor backlash, which was a concern due to the need for the sample sheet to be precisely positioned in the Test Area. The motor was intended to be on the middle shaft to maximize the timing belt system's effectiveness; however, due to lack of space and interference with other parts, it had to be moved to drive the first shaft. The magnetic clutch is initiated as the motor is turned off in order to stop the roller shafts from moving any further. When designing the pulley system an online calculator provided by the timing belt/pulley manufacturer, Stock Drive Products, was employed. This calculator picked the products needed for the system after knowing the center distances between the shafts as well as the shaft's diameter. **Appendix F** summarizes the calculations for determining the necessary torque needed to drive the system, given that there will be some losses due to the timing belts as well as a force that each shaft must overcome due to the double-torsional springs. The motor was selected based upon these calculations, and a custom coupling had to be designed to accommodate the motor that was used in the design in order to maximize the effectiveness of the motor. A schematic of the final concept is shown below in **Figure 31**.

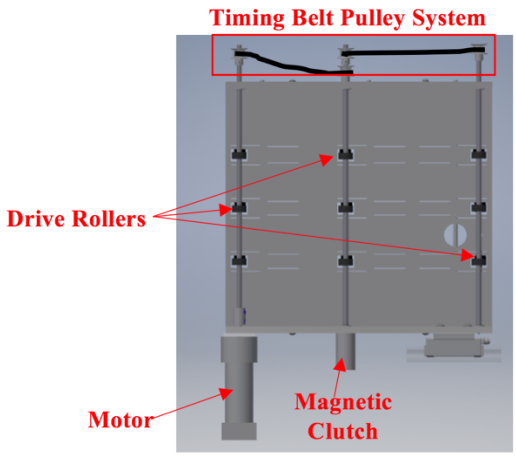

Figure 31: Top View of Final Paper Tray

Now that an overview of the mechanics of the final paper tray design has been given, the motion of the sample paper through the machine can be continued. The first set of driven rollers picks up the paper from the redirection piece and continues to move it through the table until the first test spot is centered in the Test Area. The motor driving the rollers then turns off, and the rollers lock into place, via the magnetic clutch. The double-torsional springs provide a constant clamping force on the paper, holding it in place during scrubbing and ensuring an accurate sample is consistently acquired.

After the paper has been positioned on the paper tray, the combined cloth and weight assemblies index themselves over the first test spot via a lead screw. The major design change in the final concept is that the weight assembly and cloth assembly now move as one. As previously stated, the cloth assembly has now been rotated 90° and moves on the same lead screw from the previous design to index itself over each test spot. **Figure 32** displays the cloth and weight assembly in its entirety. The assembly now consists of a portable combined plate concept, but the overarching idea is similar to the original cloth assembly design concept: The cloth is still one continuous piece, and two spools anchor the cloth on either side of the back plate. The spool on the right, or the spool located at the back of the entire machine, is driven by a motor and pulls the cloth through the test area and to the densitometer. This spool holder is attached to a motor via a belt and pulley configuration. As the cloth is fed through the assembly, it runs through a series of 10 dowels, which are used to orient the cloth parallel to the paper tray, move it in front of the densitometer, and ensure proper tension when transitioning from the back plate to the front plate. The dowel

closest to the drive spool is attached to an encoder which determines the proper amount of cloth to be fed through by tracking how much the radius of the spool grows in order to gauge where the cloth sample is in relation to the Test Area and densitometer. A solenoid on the back side of the back plate, close to the shaft of the unused cloth spool holder, is responsible for tensioning the cloth by releasing an arm which interacts with a sprocket attached to the spool holder's shaft. When the plate is indexed over the Test Area and scrubbing is ready to commence, the solenoid that is located on top of the piece that connects the front plate to the back plate disengages and drops the front plate so that the dowel at the bottom with the foam tip attached is in contact with the paper being analyzed. The front plate movement is limited by a linear slide and carriage. When the cloth has been rubbed, the rubbing sample is then fed through until it is aligned with the densitometer lens. Another shaft that attaches to a rotating body forces the sample between the lens and a white backdrop so that a proper reading can be obtained. The densitometer is attached to the back plate with a series of brackets and a Velcro strap. As stated before, the entire combined plate is connected to the frame of the entire assembly with a lead screw which runs through the center of mass of the back plate.

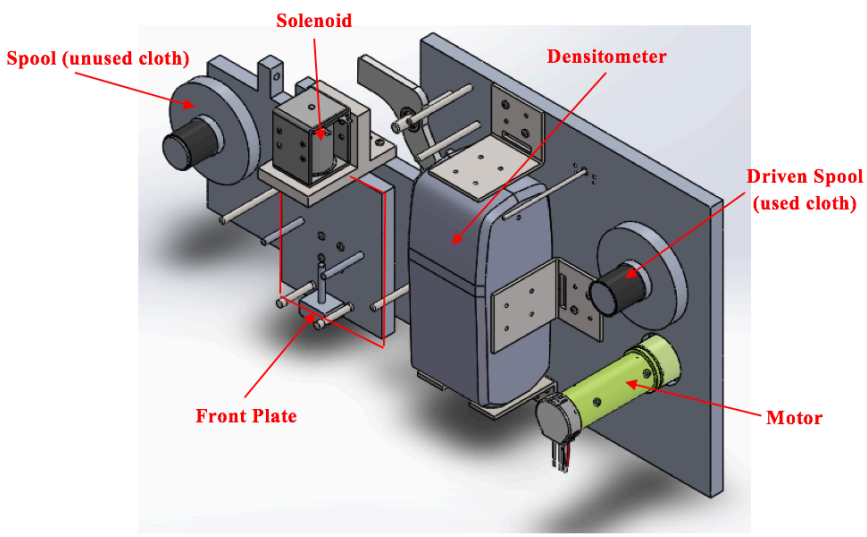

(a)

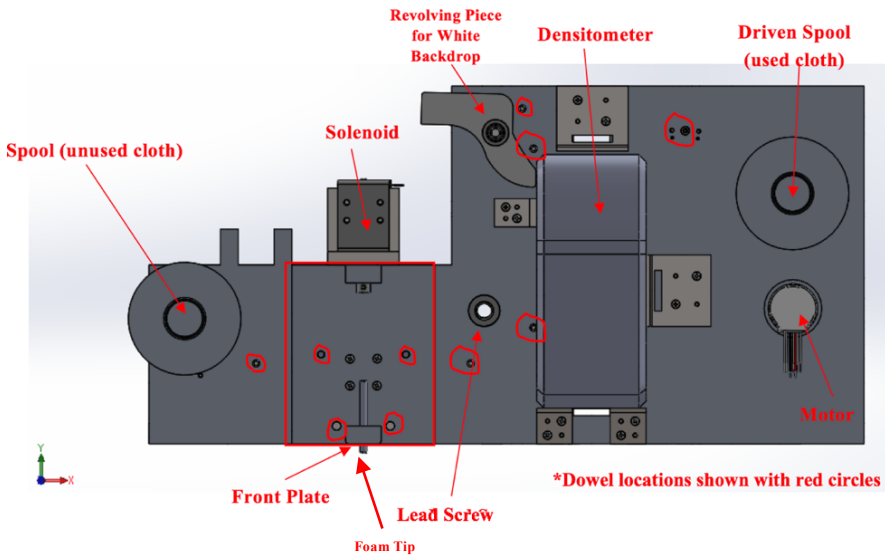
Revolving Piece for White Backdrop
Densitometer
Driven Spool (used cloth)
Spool (unused cloth)
Solenoid
Motor
*Dowel locations shown with red circles
Front Plate
Lead Screw
Foam Tip

(b)

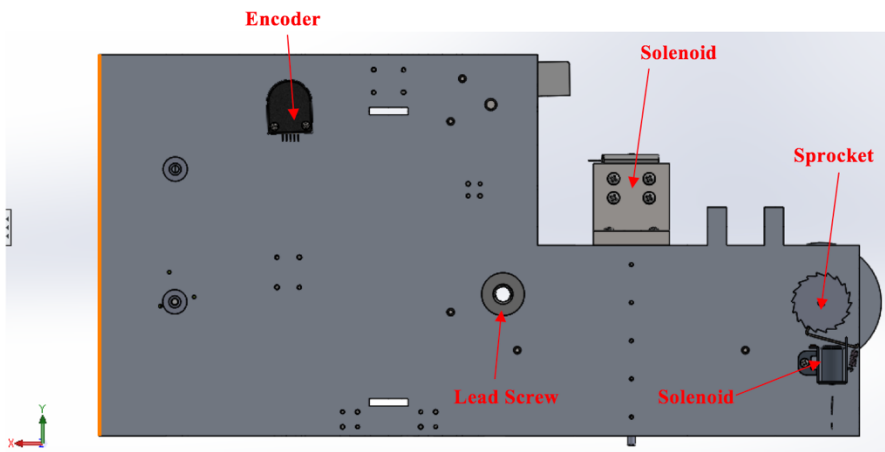
Encoder
Solenoid
Sprocket
Lead Screw
Solenoid

(c)

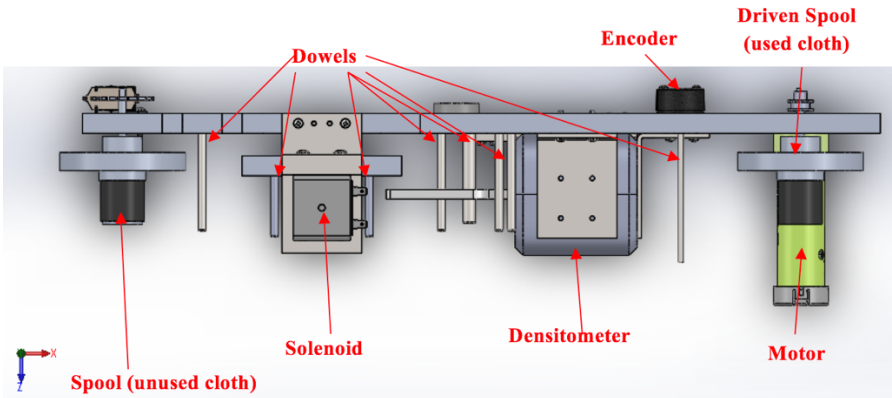
Dowels
Encoder
Driven Spool (used cloth)
Solenoid
Densitometer
Motor
Spool (unused cloth)

(d)

Figure 32: Schematic of Cloth Assembly Combined Plate (a) Front Isometric View (b) Front View (c) Back View (d) Top View

To repeat, the weight assembly has not been altered much from the original design concept: It still consists of a solenoid that positions itself on a lead screw and drops itself and a weight onto the cloth, except now it moves with the entire cloth assembly. In order to select the size of the lead screw, beam analysis was conducted. This analysis is summarized in **Appendix G**. Based on the calculations, a .5" lead screw was selected. The combined plate of the cloth assembly weighed ### grams; therefore, a ### gram weight was added to the solenoid to make the weight on the cloth equal 574.3 grams, per design requirements.

A much larger frame has been designed to house and hold all of the components of the machine. It consists of two side plates, a back plate, and a base plate, which are shown in **Figure 33**.

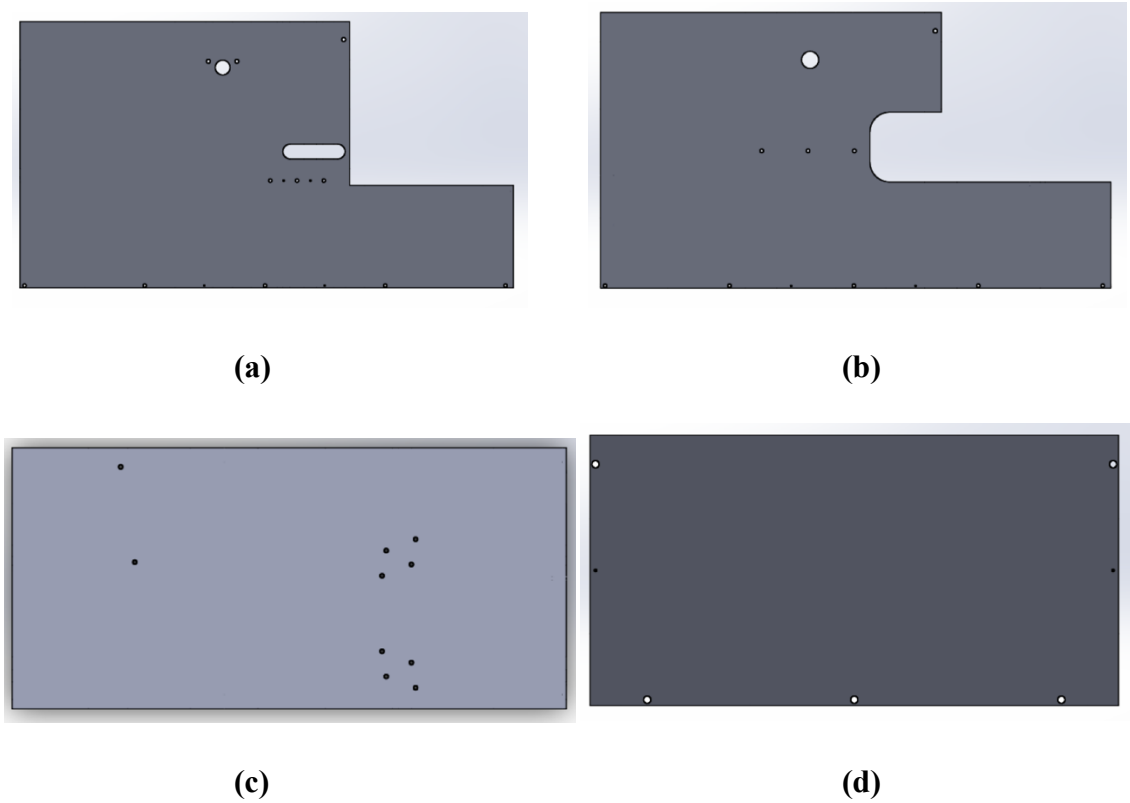

Figure 33: Machine Frame (a) Side Plate 1 (left side); (b) Side Plate 2 (right side); (c) Base Plate; (d) Back Plate

Now that the paper has been clamped to the paper tray and both the cloth and weight assemblies positioned over the first test spot, testing can commence. The paper tray is connected to a slider crank, which is able to move rapidly the entire paper tray two inches forward and backward. One rotation of the crank is one full scrub, and the RPM required to perform this motion was deemed

to be 60 RPM. Calculations were performed to design the slider crank arms and "dumb" motor, which are summarized in **Appendix H** and **Appendix I**, respectively. A "dumb" motor does not count as one of our four motors as it does not take up an axis of motion. This motor works through the implementation of a coded Pulse Width Modulated (PWM) signal that throttles the motor on and off by only using one of the logic outputs located on our motor control box. In layman's terms, we are creating primitive closed-loop feedback control on our own and without the use of the motor box. **Figure 34** shows the location and components of the slider crank within the machine.

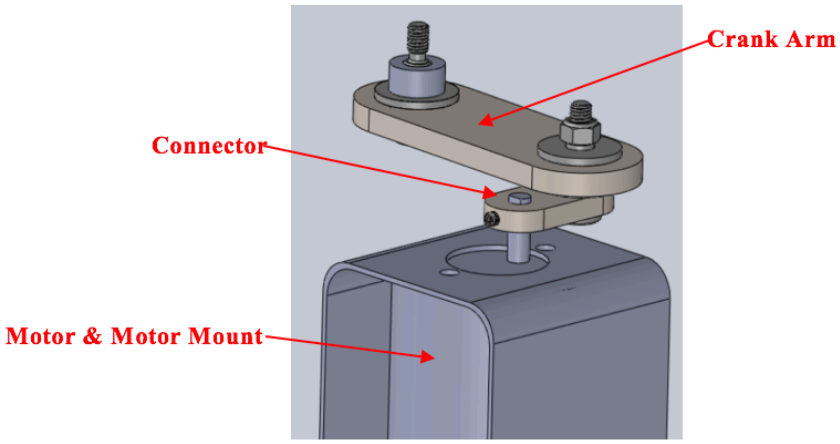

Figure 34: Slider Crank

The paper tray is able to move due to the slider crank with the help of a linear carriage and bearing track. One one side of the paper tray, a linear carriage is attached to a track located on the side plate of the frame. On the opposite side, the paper tray is held by a shaft and bearing that glides in a cutout custom track that is located on a support on the other side plate of the frame. These two components are shown in **Figure 35,** and both are attached to the paper tray up to both support it and allow it to move with the slider crank.

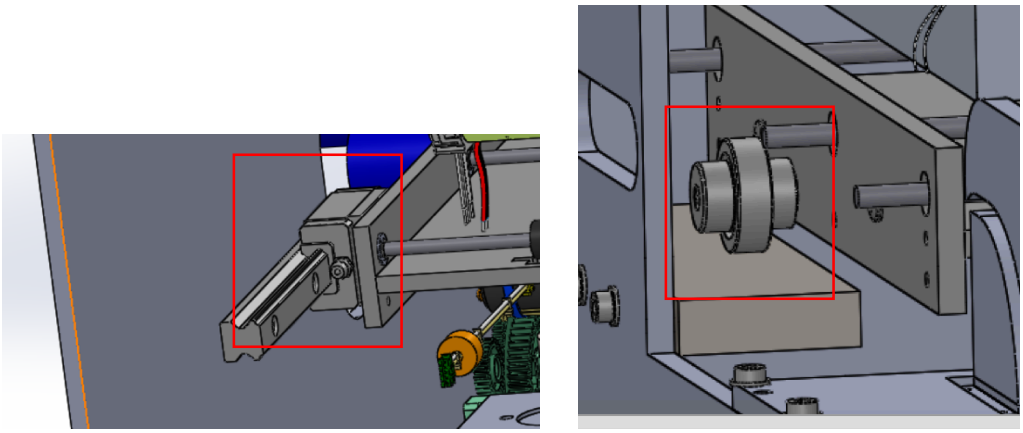

(a) **(b)**

Figure 35: Motion Components (a) Linear Carriage; (b) Bearing Track

Following the completion of the scrubbing, the driven cloth spool pulls the cloth toward the densitometer while the lead screw and paper tray reposition to test the next test spot on the sample page. Once all six sample spots are tested, the paper exits the table and the next sheet is tested. Ideally, this process will be programmed using photogates so that a new sheet of paper immediately enters the redirection piece and paper tray as soon as the sheet in front of it moves out in order to maximize the efficiency of the entire testing process.

Phase IV: Assembly

Once all of our parts were acquired, assembly began. Following the ordering of our products, we realized that several of our machined parts needed minor changes. Because time was of the essence, we did not pull the drawings from the machine shop, fix, or resubmit them. Instead, we reworked the parts on our own with the help of Professor Foster and his machines. It should be quickly noted that the drawings in the design book have been updated to reflect these minor changes.

The greatest assembly issue happened when we went to connect the motor to the storage drawer that was given to us by Lexmark. When we designed our frame, we did not realize that the storage drawer would need another piece in order to properly connect the motor. Our frame did not allow enough room for this connection, so we were unable to connect our first motor. The side plate of our frame should have included a cutout for this piece, shown in **Figure 36**. The updated design book includes the side plate of the frame with the cutout for the gear and motor.

The easiest piece to assemble was the redirection piece. However, the inner edges of the fins first had to be smoothed so that the paper would not catch on the rough surfaces as it tried to pass through the piece. **Figure 37** shows the fully assembled redirection piece. After assembling the entire machine, it was found that the redirection fins were not long enough to transport perfectly the paper from the storage drawer to the paper tray. Therefore, it is recommended that the bottom dip of the top fin be extended to better deliver the paper to the first set of drive rollers. This area of redesign in shown by the red box in the figure.

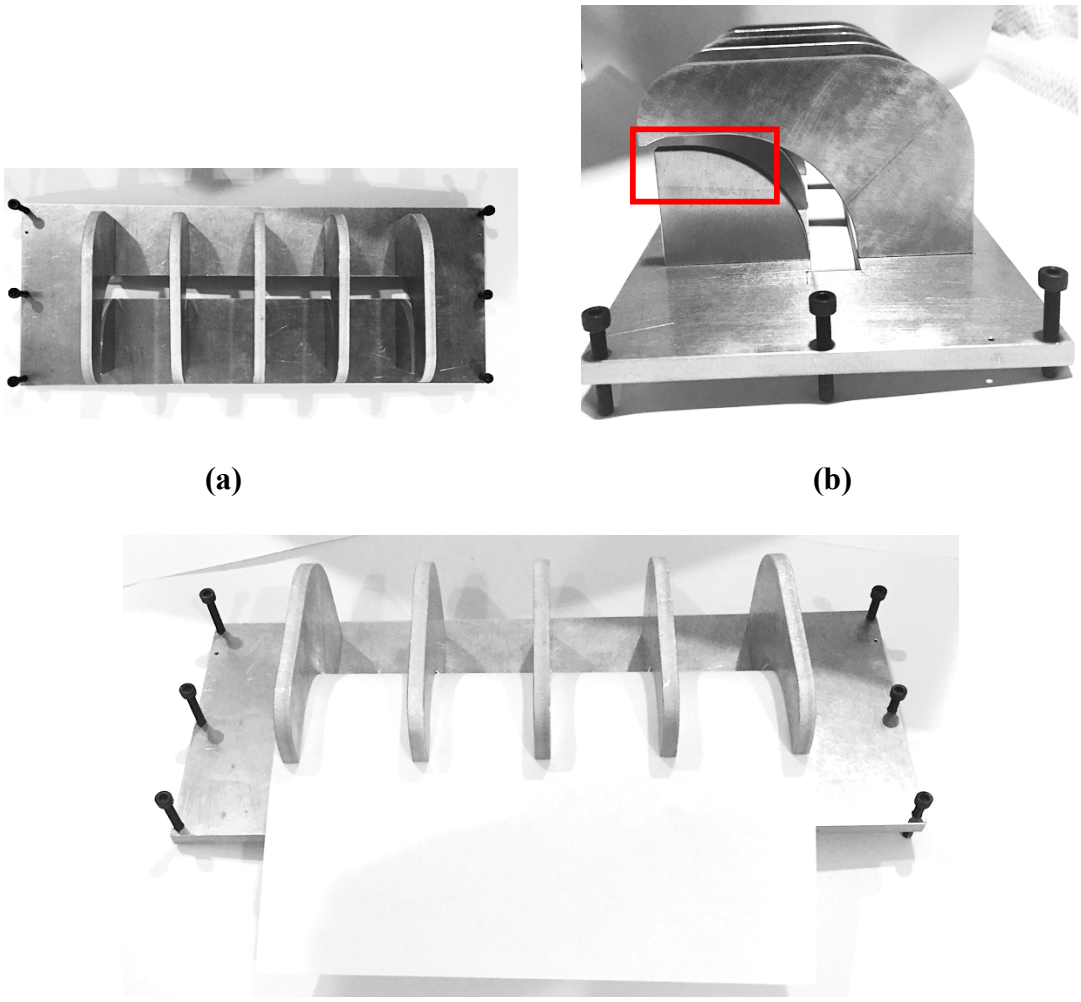

Figure 36: Assembled Redirection Piece (a) Top View; (b) Side View; (c) View with Paper

The most notable reworks that had to be accomplished were on the plates of the frame: The base plate slider crank attachment holes were moved 22.86 mm down the plate, 6 mm support rod attachment holes on both side plates were reamed to be .25 mm larger in diameter, inner diameter of the spacer for the shoulder screw assembly on the paper tray was reamed to be 10.4 mm, coupling for the lead screw was reamed on one side to match the diameter of the lead screw motor.

Once all of the parts were finally in, the paper tray was easily assembled. No design changes were made, and the slider crank also assembled into the tray as designed. The shoulder bolt of the slider crank had to be cut to fit flush with the paper tray's top surface in order to not impede the paper's path of motion on the tray. Additionally, in order to crank a full revolution, the motor had to be moved over to align parallel with the shoulder bolt attachment on the base of the frame. This new location is shown by the red box in **Figure 37**. Another assembly issue in the motion components of our assembly had to do with the bearing track. The wrong bearing was sent by McMaster-Carr, so the paper tray was only being held by the linear carriage on one side. This was problematic as the paper tray tilted slightly toward the linear carriage. The linear carriage is also believed to be restricting the ability of the paper tray to sit on the track. Therefore, the carriage track should be made to pivot slightly so that the other side of the paper tray is able to sit on the track.

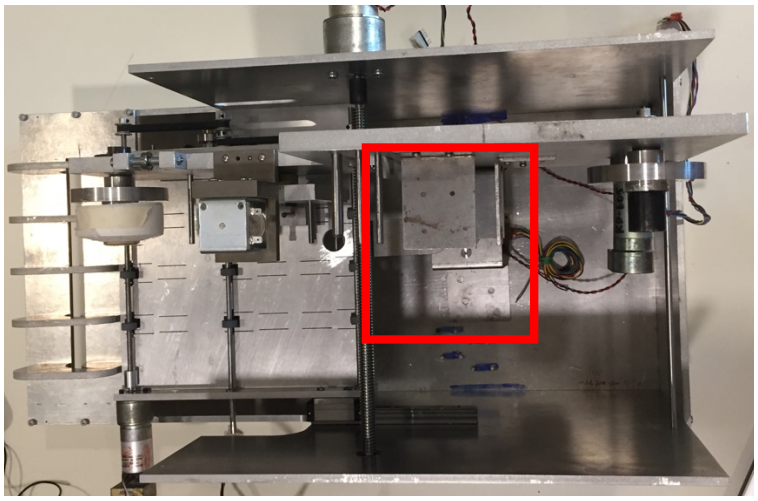

Figure 37: New Slider Crank Location

Assembling the combined plate proved to be challenging in regards to our design. There was a design mistake with the rotating backdrop: The rotating piece was designed to fit a 5 mm dowel, but an 8 mm hole was cut into the back plate for an 8 mm dowel to be inserted. The face of the rotating backdrop piece is not large enough to allow the 5 mm hole to be reamed to 8 mm;

therefore, the design of the back plate has been altered to accommodate a 5 mm shaft with a 5 mm hole cut into it. Additionally, the bushings in the combined plate had to be forcefully expanded to accommodate the spool and encoder shafts, and the back and front plate dowel holes had to be spring-punched in as the dowels slipped slightly within them. These minor issues were due to tolerancing mistakes. The original shaft coating for the spool shafts that was ordered on McMaster-Carr was not what we thought that it would be. The inner diameter was smaller than expected, and the tubing was too think and too difficult to cut. Therefore, we coated our shafts with primer and one coat of Plasti-Dip in order to add a frictional, gripping layer between the cardboard cloth spool and the slippery steel spools. The encoder that we received from Lexmark was unable to be mounted due to lack or screws. The screws provided do not provide enough support and guidance to hold the encoder straight on the shaft. Not only that, the encoder itself was extremely loose, and we could hear the plastic encoder piece moving around and hitting pieces as the shaft was turned. Additionally, the shaft we received was crooked. All of these combined issues made our entire encoder configuration fail. It is recommended that a new encoder be installed in the machine.

The greatest assembly issue happened when we placed the combined plate on the lead screw and support rod. Even though the lead screw was theoretically calculated to run through the center of mass of the combined plate, the weight of the combined plate was not evenly distributed, and the entire plate wanted to rotate away from the support rod and down toward the back plate of the machine. Obviously, this was not desired as the combined plate was tilting downward. To alleviate this issue, we moved the guiding support rail to the back side of the combined plate. A 20 by 20 mm section was cut out of the combined plate and a ball bearing and shoulder screw were inserted into the combined plate to move along the support rod. The new position is shown in **Figure 38**. Now, the guiding support rail restricts the natural rotation of the combined plate due to the uneven distribution of weight on either side of the lead screw.

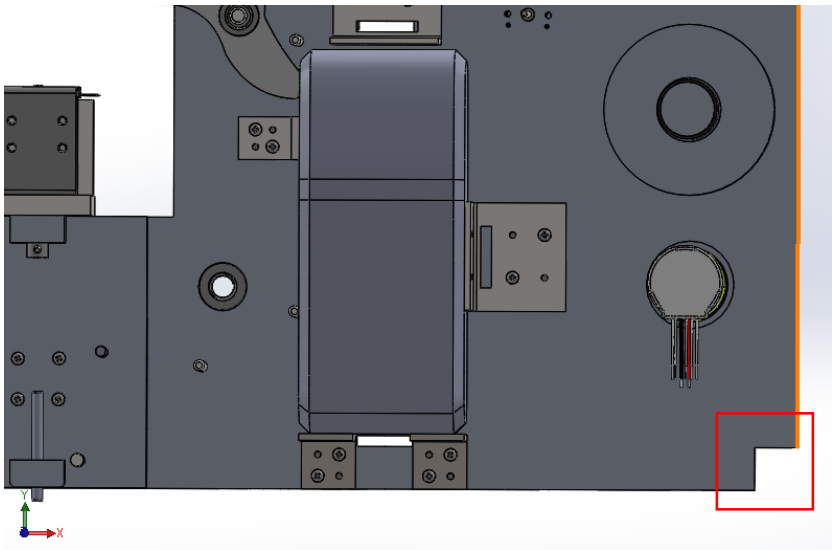

Figure 38: Combined Plate Revision

Because our machine could not mechanically function, we were unable to electronically program the 5 motors to operate as desired. With a month's more time, we could have programmed the machine.

Final Product

Due to lack of time, our machine is a non-working prototype. With more time to rework parts, program, and debug, we believe that our prototype would fulfill the necessary functions outlined and automate the fusegrade testing process. **Figure 39** and **Figure 40** displays our machine as it stands at the end of our spring semester in May 2016.

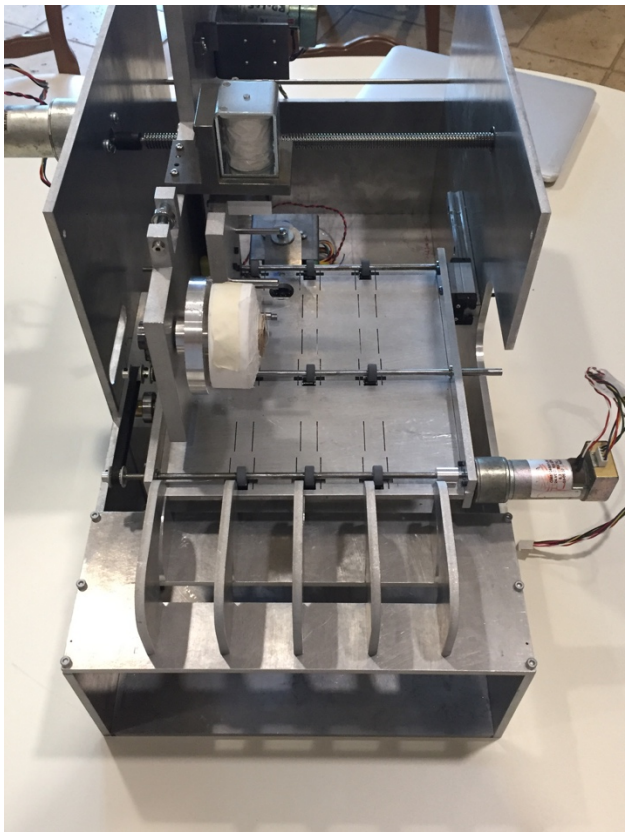

Figure 39: Tilted Front View of Machine

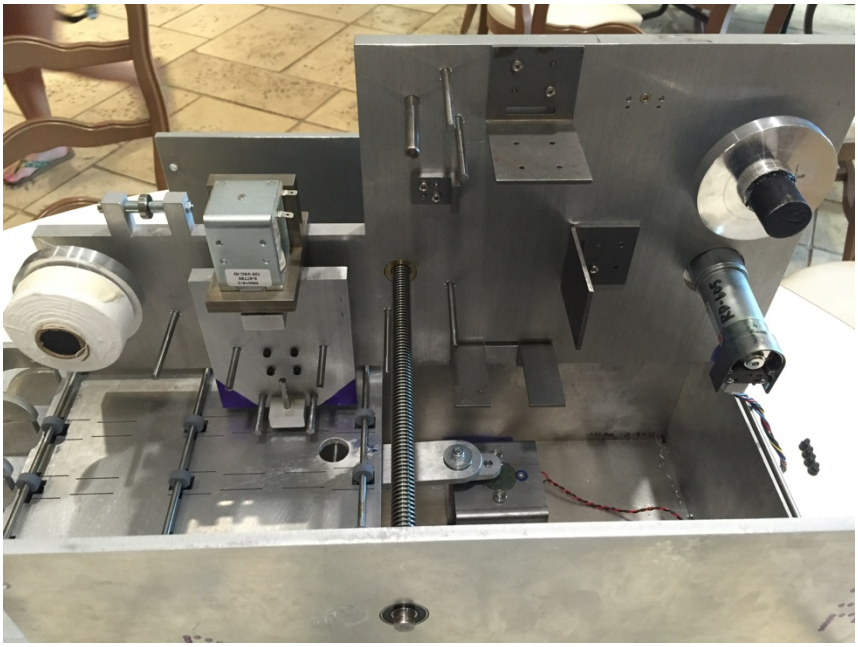

Figure 40: View of Combined Plate

Future Improvements

To improve our machine, obviously programming needs to be accomplished. After programming the machine and making it operable, it is probable that an entire host of other concerns may arise, but aside from programming there are several future improvements to note. First, the edges of the paper tray need to be chamfered in order to better accommodate the paper. Additionally, a magnetic clutch should be added on the center shaft to increase the precision of the paper tray drive rollers in positioning the sample page in the testing area. A weight needs to be added to the front plate of the combined plate in order to satisfy the 574.3 gram testing requirement. Furthermore, the encoder needs to be reconsidered as the current encoder will not work in the design. The rotating backdrop, once functional, will need to be painted white in order to ensure that the densitometer is obtaining valid samples from the cloth. Finally, a trash receptacle should be designed so that the sample sheets have somewhere to go following their completed testing on the paper tray. Our machine could benefit from these improvements as well as any improvements in the functionality of the motors, once programmed.

Gantt Chart & Project Management

Following our presentation in December, we reworked our Gantt Chart as we basically started from ground zero. **Table 5** displays the Gantt Chart, with a completed, programmed and finished product ready to deliver on May 7th, 2016.

Table 5: Gantt Chart

	Phase #1 - Design		Wed 1/27/16	Mon 2/29/16
	Design Detail	31 Days	Wed 1/27/16	Sat 2/27/16
	Design&Model	31 Days	Wed 1/27/16	Sat 2/27/16
	Paper Entry/Exit	31 Days	Wed 1/27/16	Sat 2/27/16
	Table Surface	31 Days	Wed 1/27/16	Sat 2/27/16
	Weight Assembly	31 Days	Wed 1/27/16	Sat 2/27/16
	Cloth Assembly	31 Days	Wed 1/27/16	Sat 2/27/16
	Frame	31 Days	Wed 1/27/16	Sat 2/6/16
	Finalize Detailed Bill of Materials		Sat 2/27/16	Mon 2/29/16
	Phase #2 - Production		Sun 3/20/16	Wed 4/20/16
	Assembly		Sun 3/20/16	Wed 4/20/16
	Programming		Sun 3/20/16	Wed 4/20/16
	Phase #3 - Debug		Wed 4/20/16	Sat 5/7/16
	Mechanical		Wed 4/20/16	Sun 5/1/16
	Electrical		Wed 4/20/16	Sun 5/1/16
	Final Testing & Optimization		Sun 5/1/16	Sat 5/7/16

Obviously, given our uncompleted prototype, we did not stay on track as planned. **Table 6** displays the Gantt Chart as it stands today due to falling behind. From this table, following the same time frame we set before, we would finish the project on July 21st, 2016. Honestly, this is a very accurate prediction of completion given our estimation from this point that approximately two more months are needed to program, rework parts, and debug. Our greatest fault was taking an extra month to

finalize and order parts. This was due to not realizing the tolerancing needs for drawings, as well as the speed bumps we ran into in the middle of creating our design book with the frame, slider crank, combined plate and paper tray all interfering with one another once assembled. Furthermore, programming did not commence until May 1st, which did not allow us enough time to figure out the program language and code the motors. The lessons learned from this experience is to designate more time to reworking 3D models and drawings following full assembly of individual parts, to multitask, and to be more firm with deadlines. Honestly, some team member's lack of motivation and Senioritis were an Achilles' Heel to our time management and ultimate delivery. Lessons were also learned on how to motivate a team and keep everyone on track throughout the entirety of the project.

Table 6: Realistic Gantt Chart

✓		**Phase #1 - Design**		**Wed 1/27/16**	**Thu 3/31/16**		**100%**
✓		**Design Detail**	**31 Days**	**Wed 1/27/16**	**Sat 2/27/16**		**100%**
✓		**Design&Model**	**31 Days**	**Wed 1/27/16**	**Sun 3/27/16**		**100%**
✓		**Paper Entry/Exit**	**31 Days**	**Wed 1/27/16**	**Sun 3/27/16**	**Colin Roberson**	**100%**
✓		**Table Surface**	**31 Days**	**Wed 1/27/16**	**Sun 3/27/16**	**Colin Roberson**	**100%**
✓		**Weight Assembly**	**31 Days**	**Wed 1/27/16**	**Sun 3/27/16**	**Dylan Moore**	**100%**
✓		**Cloth Assembly**	**31 Days**	**Wed 1/27/16**	**Sun 3/27/16**	**Peter Trzil**	**100%**
✓		**Frame**	**31 Days**	**Wed 1/27/16**	**Sun 3/27/16**	**Dylan Moore**	**100%**
✓		**Initial Detailed Bill of Materials**		**Sun 3/27/16**	**Thu 3/31/16**	**Natalie Rayfeild**	**100%**
✓		Order Parts		**Thu 3/31/16**	**Thu 3/31/16**	Natalie Rayfeild	100%
		Phase #2 - Production		**Thu 4/21/16**	**Sun 6/19/16**		**42%**
✓		Initial Parts In		Thu 4/21/16	Thu 4/21/16		100%
✓		Check That Parts are in Spec		Thu 4/21/16	Thu 4/21/16		100%
✓		Re-Order/Additional Orders		Thu 4/21/16	Thu 4/21/16		100%
✓		All Parts In		Wed 5/4/16	Wed 5/4/16		100%
✓		**Assembly**		**Sat 4/30/16**	**Sat 5/7/16**		**100%**
✓		Table Surface		Sat 4/30/16	Sat 5/7/16	Colin Roberson	100%
✓		Combined Plate		Sat 4/30/16	Sat 5/7/16	Peter Trzil	100%
✓		Frame		Sat 4/30/16	Sat 5/7/16	Dylan Moore	100%
✓		Final Bill of Material		Thu 4/21/16	Thu 4/21/16	Natalie Rayfeild	100%
		Programming		**Tue 4/19/16**	**Tue 6/14/16**	**Haley Register**	**17%**
✓		Begin Learning Programming Language		Tue 4/19/16	Sun 5/1/16		100%
		User Interface		**Mon 5/9/16**	**Tue 5/10/16**		**0%**
		Start/Stop		Mon 2/29/16	Tue 3/8/16		0%
		Paper Input		**Wed 5/11/16**	**Fri 5/13/16**		**0%**
		Paper Loader		Mon 2/1/16	Fri 2/12/16		0%
		Table Surface		**Tue 5/17/16**	**Mon 5/23/16**		**0%**
		Rollers		**Tue 5/17/16**	**Mon 5/23/16**		**0%**
		Slider Crank Motion		Mon 5/23/16	Mon 5/23/16		0%
		Combined Plate		**Tue 5/24/16**	**Wed 6/8/16**		**0%**
		Spool Drive		Tue 5/24/16	Fri 5/27/16		0%
		Cloth Tension/Detension		Wed 5/25/16	Mon 5/30/16		0%
		Alert User When Cloth To Be Replaced		Sun 5/29/16	Tue 5/31/16		0%
		Lead Screw Motion		Wed 6/1/16	Wed 6/8/16		0%
		Engage Solenoid		Fri 6/3/16	Sat 6/4/16		0%
		Data		**Thu 6/9/16**	**Tue 6/14/16**		**0%**
		Collection via Densitometer		Thu 6/9/16	Mon 6/13/16		0%
		Input Into Software		Mon 6/13/16	Tue 6/14/16		0%
		Fusegrade Outputs		Tue 6/14/16	Tue 6/14/16		0%
		Phase #3 - Debug		**Sun 5/8/16**	**Thu 7/21/16**		**0%**
		Mechanical		**Sat 5/7/16**	**Wed 6/8/16**		**15%**
		Electrical		Tue 6/14/16	Thu 7/14/16		**0%**
		Final Testing & Optimization		Thu 7/14/16	Thu 7/21/16		0%

Conclusions

In conclusion, we feel that given two additional months, our machine would be a valid, working first prototype for automating this manual testing process. From here, we believe that components of our design can be reworked to create a smooth, automated process. We feel confident that our design will fulfill all expectations and the necessary functions outlined in the project statement once programmed and debugged.

Appendix A: Current Manual Testing Process

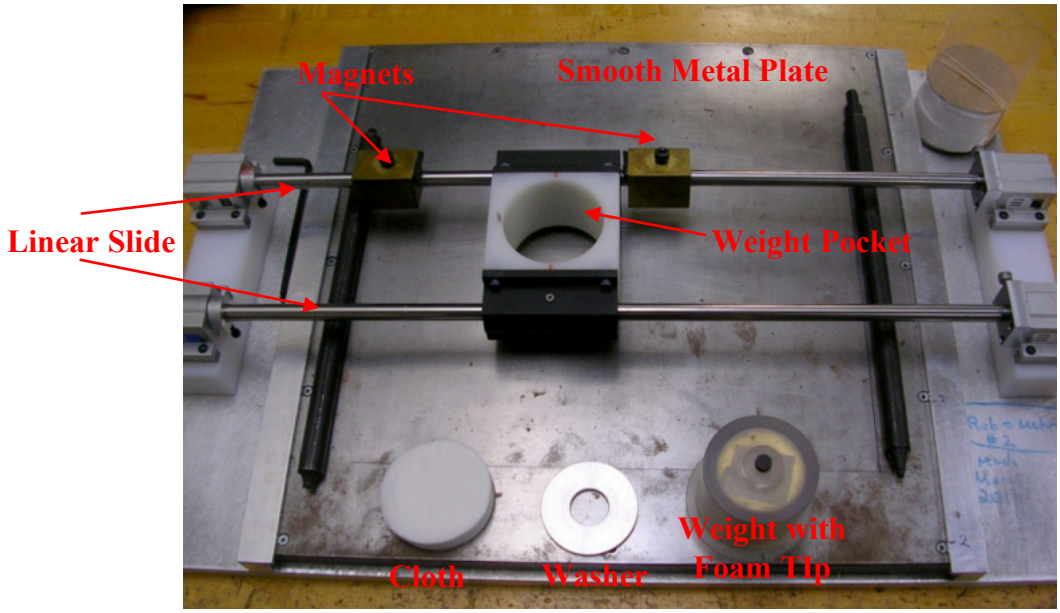

Figure A.1: Overview of Equipment in Current Process

(a) **(b)**

Figure A.2: (a) Weight and Foam Tip Assembly (b) Foam Tip Assembly with Cloth

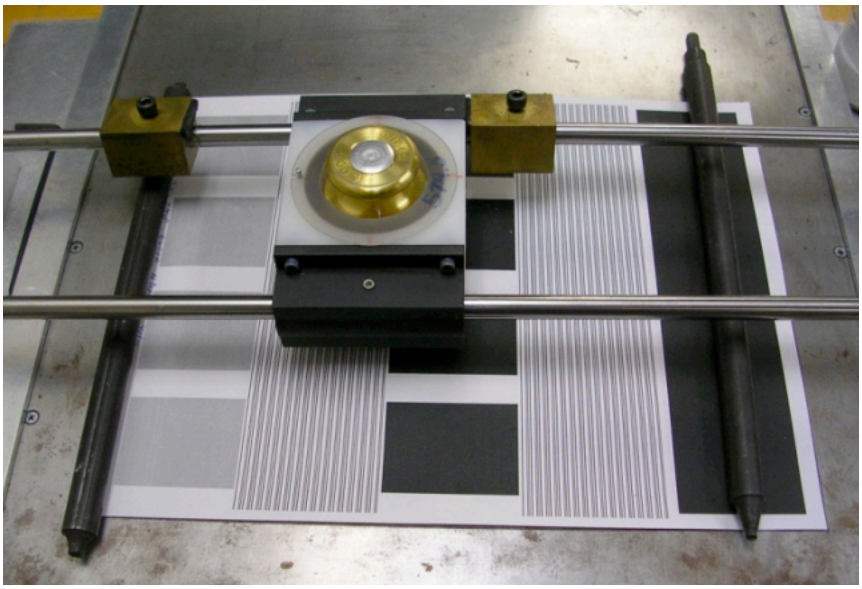

Figure 3: Fully Loaded Assembly with Paper Sample Ready for Testing

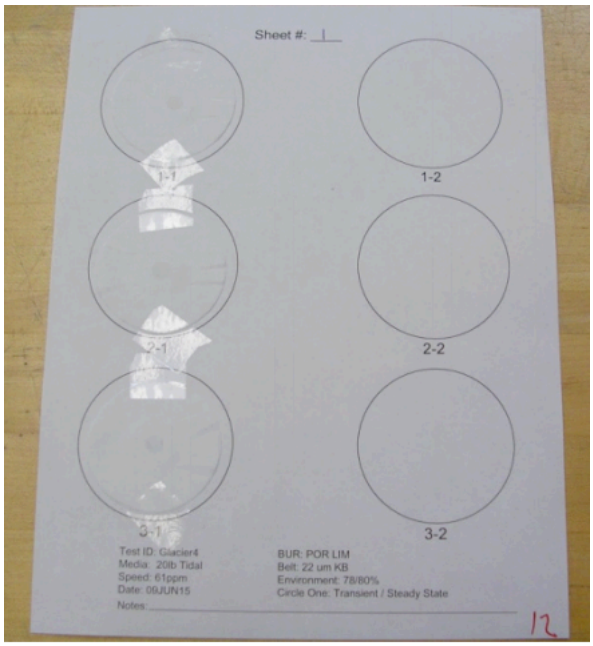

Figure 4: Page of Cloth Samples Taped and Ready for Scanning by Densitometer

Appendix B: Matlab Code to Alter Weight/Volume of Brass Weight

Final Length Calculator for Brass Weight Used in the Weight Assembly

Senior Design Dylan Moore

```
mdb =8.6*10^6/(1000^3); %mass density of brass %g/mm^3
m=574.3; %mass of the weight %g
l1=9.3345; %mm
r1=14.224; %mm
%l2= variable
r2=15.861; %mm
l3=r2-r1; %mm
r3=3.175; %mm

l2=(((m/mdb))+(l1*pi*r1^2)+(l3*pi*r3^2))/(pi*r2^2)
```

```
l2 =

   92.0674
```

Appendix C: Friction Calculations

Test Case: Cloth on Ceramic

$T_1 = 4.50\ N$

$T_2 = m * g = (.55\ kg)\left(9.81\frac{m}{s}\right) = 5.4\ N$

$\frac{T_1}{T_2} = e^{\mu\alpha}$ $\alpha = \frac{\pi}{2}$ therefore, $\mu = -.116$

Case 1: Cloth on Foam Tip

$T_1 = 3.60\ N$; $T_2 = 5.40\ N$; $\alpha = \frac{\pi}{2}$

Therefore, $\mu = -.258$

RETEST #1: $T_1 = 3.40\ N$ → $\mu = -.294$

RETEST #2: $T_1 = 3.20\ N$ → $\mu = -.333$

RETEST #3: $T_1 = 3.15\ N$→ $\mu = -.343$

Case 2: Cloth on Paper

$T_1 = 3.0\ N$; $\alpha = \frac{\pi}{2}$

Therefore, $\mu = -.374$

RETEST #1: $T_1 = 2.90\ N$ → $\mu = -.396$

RETEST #2: $T_1 = 3.0\ N$ → $\mu = -.374$

RETEST #3: $T_1 = 2.85\ N$→ $\mu = -.407$

Case 3: Paper on Steel

$T_1 = 3.80\ N$; $\alpha = \frac{\pi}{2}$

Therefore, $\mu = -.224$

RETEST #1: $T_1 = 3.90\ N$ → $\mu = -.207$

Appendix D: FBD's to Calculate/Validate Static Friction

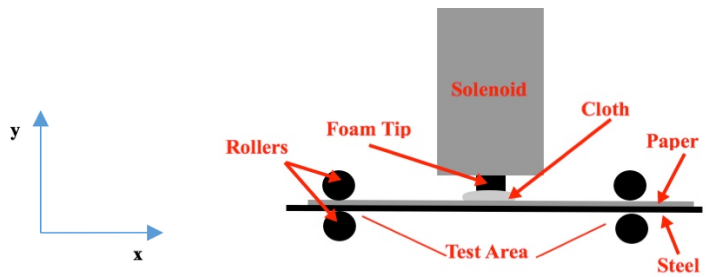

Given: $m_w = 574.3\ g$; $g = 9.81\ m/s$; $\mu_{f\,c} = .307$; $\mu_{c\,p} = .388$

FBD of Foam Tip

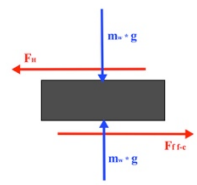

$$\sum F_x = -F_H + F_{f_{f\,c}} = 0$$

$$F_{f_{f\,c}} = m_w g * \mu_{f\,c} = 1.73$$

Therefore, $F_H = 1.73N$

FBD of Cloth

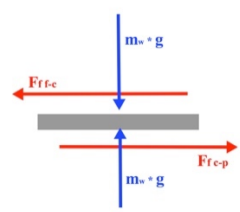

$$\sum F_x = F_{f_{c\,p}} - F_{f_{f\,c}} \leq 0$$

$F_{f_{c\,p}} \leq F_{f_{f\,c}}$ for no slipping to occur

$$F_{f_{f\,c}} = m_w g * \mu_{f\,c} = 1.73\ N$$

$$F_{f_{c\,p}} = m_w g * \mu_{c\,p} = 2.09\ N$$

$2.09 \leq 1.73$ UNTRUE

Therefore, **CLOTH WILL SLIP**

Appendix E: Center Driven Shaft Calculations

For 5mm shaft

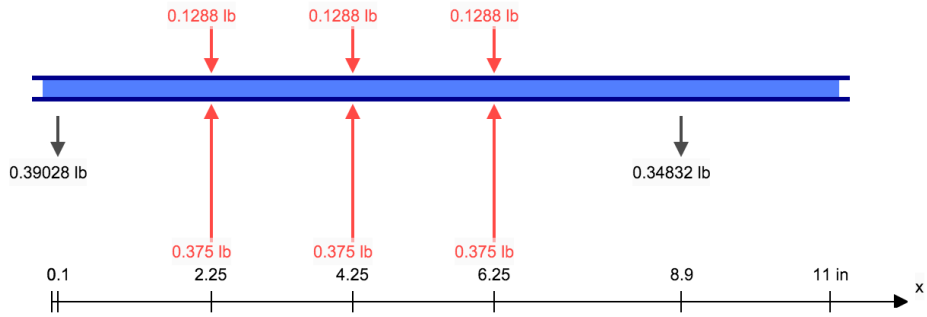

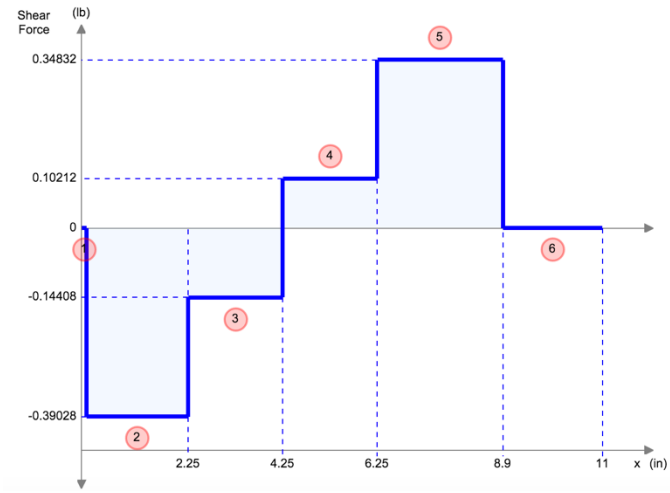

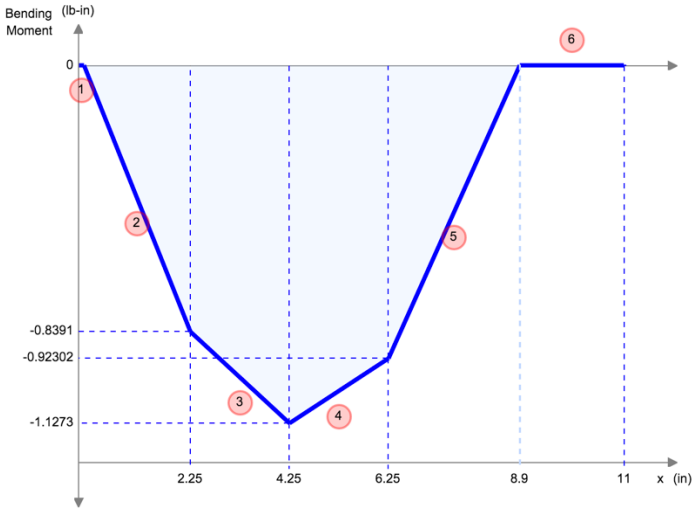

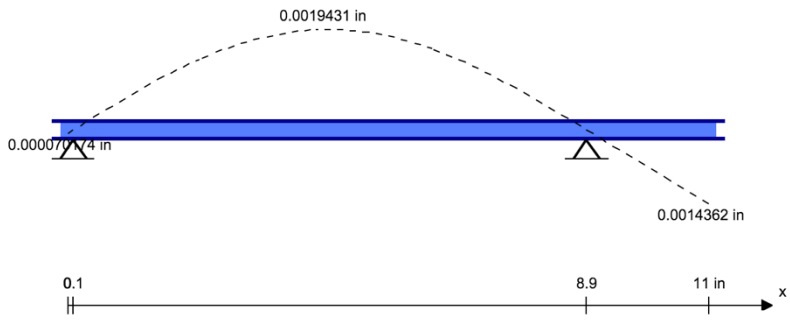

Deflection Value (in)	Locations along Beam (in)
-0.0014362	11
-0.000070174	0
0	0.1, 8.9
0.0019433	4.4668

Stress Results

Stress Units: psi	Type	Stress Value (psi)	Locations along Beam (in)	Y location on Beam Section (mm)
Overall Maximum Transverse Shear Stress	Positive (Upward)	10.597	6.25	3 (Neutral Axis)
	Negative (Downward)	11.874	0.1	
Overall Maximum Normal Bending Stress	Tension	871.109	4.25	6 (Top of Section)
	Compression	871.109	4.25	0 (Bottom of Section)

Appendix F: Driven-Roller Motor Calculations

Idler Roller

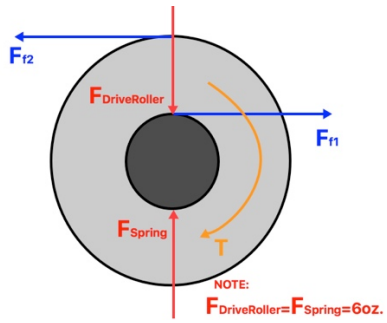

$$\sum T_{idler} = T_{idler} + 3 * F_{f1} * r_{idler_{shaft}} - 3 * F_{f2} * r_{idler_roller}$$

$$T_{idler} = 3F_{f2} * r_{idler_{roller}} - 3F_{f1} * r_{idlershaft}$$

$$T_{idler} = .2925\ oz - in = .0183\ lb - in$$

Drive Roller

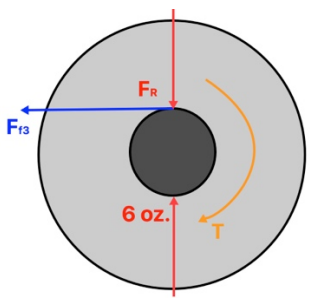

$$\sum T_{drive} = T_{drive} - 3 * F_{f3} * r_{drive_shaft}$$

$$T_{drive} = 3F_{f3} * r_{drive_shaft}$$

$$T_{drive} = 0.3600\ oz - in = .0225\ lb - in$$

***accounted for friction on idler

Total Torque for ONE SHAFT

$$T_1 = T_{drive} + T_{idler} = .6528\ oz - in = .0408\ lb - in$$

Total Torque for THREE SHAFT DESIGN given Timing Belt Losses

$$T_{Total} = T_1 + \frac{T_1}{.97} + \frac{T_1}{.97} = 1.9984\ oz - in = .1249\ lb - in$$

Power with Safety Factor of 2

$$P = 2 * T_{Total} * 2\pi * RPM/60$$

$$\boldsymbol{P = 2.8858\ W}$$

Motor Calculation for Table Rollers

```
linear_speed=260; %in/min
drive_roller= .75; %diameter of drive roller in inches
rpm= linear_speed./(pi.*drive_roller) %rpm of roller and shaft
driveshaft_od= .25; %outer diameter of drive shaft in inches
idlershaft_od= .25; %outer diameter of drive shaft in inches
idler_roller= .5; %diameter of idler roller in inches
idlershaft_od= .25; %diameter of idler shaft in inches
springforce= 6./16; %force on each idler roller in pounds
mu_idler=.25; %acetal on steel for idler rollers
mu_paper= .19; %paper on roller for idler rollers--CHECK WITH CHRIS
torque_idler= (idler_roller./2).*(mu_paper).*(3.*springforce)-
(idlershaft_od./2).*(mu_idler.*3.*springforce);
mu_drive= .16; %bronze on sintered steel for drive rollers
torque_drive= (mu_drive).*(driveshaft_od./2).*(3.*springforce); %drive roller torque with
combined load of all 3 idlers
T=torque_drive + torque_idler; %torque for single shaft
Ttotal=T+T./(.97)+T./(.97) %Total torque for all three shafts given timing belt losses
Power=2.*Ttotal.*2.*pi.*rpm./60
```

```
rpm =
  110.3474
Ttotal =
    0.1249
Power =
    2.8858
```

Published with MATLAB® R2015a

Appendix G: Lead Screw Calculations

Assuming:

45 lb. force at center of lead screw

Lead Screw behaves as cylindrical beam with two supports

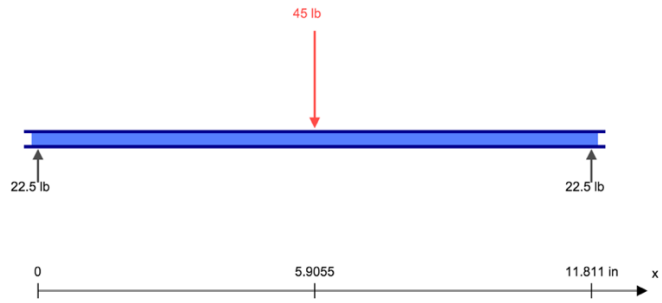

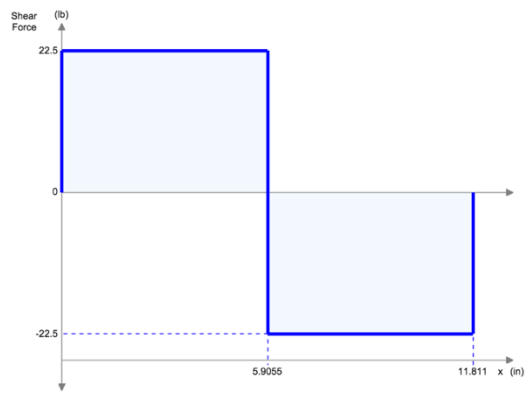

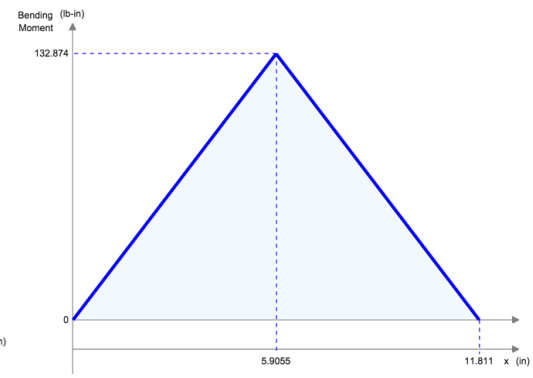

For Heat Treated 4140 Alloy Steel:

Diameter (in)	Moment of Inertia (in^4)	Deflection (in)
0.5	0.003067962	0.016782634
0.75	0.015531555	0.003315088
1	0.049087385	0.001048915

For .5-inch Lead Screw:

INPUT PARAMETERS			
Parameter	Symbol	Value	Unit
Load *	P	45	lbf
Beam Length	L	11.811	inch
Distance a	a	5.9055	
Distance x	x	5.9055	
Modulus of Elasticity	E	30000	ksi
Distance from neutral axis to extreme fibers	c	.25	inch
Second moment of area**	I	0.003068	inch^4

RESULTS			
Parameter	Symbol	Value	Unit
Reaction Force 1	R_1	22.5	lbf
Reaction Force 2	R_2	22.5	
Transverse Shear Force @ distance x	V_x	22.5	
Maximum Transverse Shear Force	V_{max}	22.5	
Moment @ distance x	M_x	132.9	lbf*in
Maximum Moment	M_{max}	132.9	
Slope 1	θ_1	-0.004	radian
Slope 2	θ_2	0.004	
Slope @ distance x	θ_x	0.000	
Maximum Slope	θ_{max}	0.004	
Deflection @ distance x	y_x	-0.017	inch
Maximum Deflection	y_{max}	-0.017	
Bending Stress @ distance x	σ_x	10827.4	psi
Maximum Bending Stress	σ_{max}	10827.4	

Principal Stresses

Input Data

τ_{xy} = 153 psi

σ_x = 10827 psi

σ_y = 0 psi

$$\sigma_1, \sigma_2 = \frac{\sigma_x + \sigma_y}{2} \pm \sqrt{\left(\frac{\sigma_x - \sigma_y}{2}\right)^2 + \tau_{xy}^2}$$

σ_1 = 10829 psi

σ_2 = -2 psi

$$\tau_{max}, \tau_{min} = \pm\sqrt{\left(\frac{\sigma_x - \sigma_y}{2}\right)^2 + \tau_{xy}^2}$$

σ_2 = 5416 psi

Von Mises Stress Criteria

$$\sigma_v = \sqrt{\sigma_1^2 - \sigma_1\sigma_2 + \sigma_2^2 + 3\sigma_{12}^2}$$

σv = 10830.2 psi

Factor of Safety: $FS = \frac{150000\ psi}{10830.2\ psi} = 13.9$

Appendix H: Slider Crank Matlab Code

```
close all, clear all, clc, format compact

r=1; %in, link 2
l=3; %in, link 3

weight=25; %lbs,assumed weight on piston
% (weight of mechanism = 2 lbs; approx. weight of table = 20 lbs)
mass=weight/32.2; %slugs

RPM=60;
w2=(2*pi*RPM)/60; %crankshaft angular velocity, rad/sec
t=0:360; %time, seconds
theta=w2.*t;
u=0.20; %coefficient of polyethylene on steel


% %piston position
% x=(r.*cosd(theta))+(sqrt((l^2)-((r^2).*((sind(theta)).^2))));
%
% %piston acceleration
% A1=(r.^2).*(((cosd(theta)).^2)-((sind(theta)).^2));
% A2=sqrt((l^2)-(r.^2).*((sind(theta)).^2));
% a=A1./A2;
% B1=(r.^4).*((sind(theta)).^2).*((cosd(theta)).^2);
% B2=A2.^(1/3);
% b=B1./B2;
% accel=-1*r.*(cosd(theta))-a-b;


%Velocity in direction of table travel as
   ...function of shaft rotational position:
V=w2*r*cosd(theta);

%Acceleration given by first derivative of velocity eq:
a=-w2*r*sind(theta);

force=(mass*a)+(u*mass*32.2); %F=ma
maxForce=max(force);

torq=maxForce*r*sind(theta); %crankshaft torque
maxTorq=max(abs(torq)); %in-lbf
oz_inTorq=maxTorq*16
maxTorq=maxTorq/12; %ft-lbf
designTorq=1.35581794833*maxTorq %N-m


%power
% 1 ft-lbf/s = 1.355818 Watt
Power=designTorq*w2; %Watt
hpPower=Power/745.7; %hp
```

```
%{
NOTE:
Divide mechanical power required by the geartrain efficiency
(typically 0.85%) to get the power required of your motor.
Now double it for design safety factor, and use that to spec your motor.
%}

%gear efficiency
eff=0.84;   %https://prototypes.haydonkerk.com/ecatalog/
               ...brush-dc-motors/en/brush-dc-motors-GM14904S015-R1-SP
%gear ratio
    % = w_in : w_out = w_in/w_out
    % (torq*w)_in = (torq*w)_out


NeededPower=2*Power/(eff^3) %Watts, doubled to overcome friction
NeededhpPower=2*hpPower/(eff^3) %hp, doubled to overcome friction
```

```
oz_inTorq =
  158.0509
designTorq =
    1.1161
NeededPower =
   23.6630
NeededhpPower =
    0.0317
```

Published with MATLAB® R2015a

Appendix I: Dumb Motor Code

```
#PWMCON
CB 1
IN "Input desired crank motor duty cyle %",duty
#CYCLE
IF (duty>100);duty=100;ENDIF
IF (duty<0);duty=0;ENDIF
ontime=(duty/100)*200
offtim=200-ontime
IF(duty<1);JP #OFF;ENDIF
SB 1
WT ontime
CB 1
WT offtim
JP #CYCLE
#OFF
CB 1
JP #PWMCON
EN
```

Notes:

1. It will prompt you to input a % duty cycle you want to run the motor at.
2. Next it will enter the control loop, where it will check to make sure the duty cycle specified is between 0 and 100. If outside the range, it will force it into the range.
3. It then calculates on time and off time as a proportion of a 200 ms period (5 Hz square wave).
4. It checks to see if duty is = to 0. If yes, it jumps out of the loop, shuts down and jumps back to the beginning, if no, it continues. There are better ways to turn the motor off when this script is part of a bigger program, but this was quick and dirty for a standalone app.
5. It then cycles Digital output 1 on for the required time, then off for the required time, then cycles back through again.