To the Graduate Council

I am submitting herewith a Thesis written by Michael Renick Moore entitled "HH-60H Armed Helicopter Subsystem Operator Workload Assessment." I have examined the final copy of this Thesis for form and content and recommend that it be accepted in partial fulfillment of the requirements for the degree of Master of Aviation Systems.

William Lewis, Major Professor

We have read this thesis and recommend its acceptance:

Frank R. Colbris

Fred Stellar

Accepted for the Council:

Associate Vice Chancellor and
Dean of The Graduate School

HH-60H ARMED HELICOPTER SUBSYSTEM OPERATOR WORKLOAD ASSESSMENT

A Thesis
Presented for the
Master of Science
Degree
The University of Tennessee, Knoxville

Michael R. Moore
May 1999

Copyright © Michael R. Moore, 1999

All rights reserved

DISCLAIMER

The results contained within this thesis were developed at the Naval Air Warfare Center, Aircraft Division, Patuxent River, Maryland. The discussion of the data, conclusions and recommendations are the opinion of the author and should not be construed as an official position of the United States Department of Defense, Naval Air Systems Command, or the Naval Air Warfare Center.

ACKNOWLEDGEMENTS

The Author would like to express his appreciation to several individuals who contributed to the completion of this thesis. Special thanks are owed to all members of the HH-60H DT test team. In particular, my gratitude is owed Kevin Ransford who served as lead project engineer. I would also like to thank Dr. William Lewis who was my committee chairman and Dr. Frank Collins along with Mr. Frederick Stellar who graciously acted as my committee members.

Most of all I am grateful to my beautiful wife Jennifer, without whose support this project would not have been possible and to my two sons, Michael and Robert.

ABSTRACT

This thesis discusses an operator workload assessment of the Armed Helicopter Subsystem (AHS) on the U.S. Navy HH-60H Seahawk Helicopter. The workload assessment was conducted in addition to developmental test and evaluation at Naval Rotary Wing Aircraft Test Squadron at Naval Air Station Patuxent River, MD and Eglin Air Force Base, Ft Walton Beach, Fl between 25 November 1997 and 13 August 1998.

Department of Defense instructions, standards, human factors specifications, previous test plans, and reports of test results were studied to determine initial areas of focus and previous lessons learned. Specific operator workload was evaluated using the Bedford Workload Scale during verification of all the Forward Looking Infrared (FLIR) and AGM-114 Hellfire Missile launch and designation modes in mission representative flight profiles. Both ground and flight tests were conducted to verify specification and test and evaluation master plan compliance and mission suitability for the Combat Search and Rescue (Combat SAR), and Anti Surface Warfare (ASUW) missions. FLIR test scope was reduced by use of the results of the U.S. Navy SH-60B AN/AAS-44 FLIR Contingency Kit and Rapid Deployment Kit developmental test and evaluation programs. Operator workload was assessed during software, FLIR, captive carriage, and live fire developmental flight tests. Night Vision Devices (NVDs) were used on two of the six Hellfire Missile shots.

Overall operator workload was high, particularly during remote Hellfire Missile shot setup and autonomous Hellfire Missile laser guidance. During the Combat SAR mission, the operator was performing multiple tasks, including navigation and communication subtasks. Since little spare capacity was left for FLIR operation, the author recommends using either offset forward track or scan mode. Recommendations include inverting the FLIR turret and suspending it from the mounting platform.

TABLE OF CONTENTS

CHAPTER PAGE

1. INTRODUCTION 1

1.1. BACKGROUND 1
1.2. PURPOSE 2

2. TEST PROCEDURES 3

2.1. DESCRIPTION OF TEST AIRCRAFT 3
2.2. DESCRIPTION OF TEST EQUIPMENT 4
2.3. SCOPE OF TESTS 5
2.3.1. Ground Tests 5
2.3.2. Flight Tests 5
2.4. METHOD OF TEST 7
2.4.1. General 7
2.4.2. Software Tests 8
2.4.3. FLIR 9
2.4.4. Laser testing 10
2.4.5. Ordnance/Missions Systems 11
2.4.5.1. General 11
2.4.5.2. Over-land Missile Firings 11
2.4.5.3. Over-water Missile Firings 12
2.4.5.4. Mission Maneuvers 12
2.4.6. Workload Assessment 13
2.5. INSTRUMENTATION AND DATA PROCESSING 16

3. RESULTS AND EVALUATION 18

3.1. GENERAL 18
3.2. MISSION PREFLIGHT AND INITIALIZATION 20
3.2.1. General 20
3.2.2. Incorrect Magnetic Variation When Initializing With a Blank Cartridge Installed in the Mission Data Loader 21
3.3. ASUW MISSION 22
3.3.1. General 22
3.3.2. FLIR Maximum Detection Range 22
3.3.3. Maximum Classification Range (Combatant/Non-Combatant) 23
3.3.4. FLIR Display Quality 24
3.3.5. FLIR Display Symbology 25
3.3.6. Tactical Display Symbology 26
3.3.7. Difficult Auto Video Track at High FLIR Look Down Angles 26
3.3.8. Excessive Workload Required to Switch between Tactical Plot and FLIR Display 28
3.3.9. Operator Workload During Manual Entry of FLIR Contacts 29
3.3.10. Inaccurate FLIR Computed Passive Target Range 30
3.3.11. Inaccurate Position of Passive FLIR Contacts 32
3.3.12. Inaccurate FLIR Track Function Course and Speed Data 33
3.3.13. Uncommanded FLIR Gimbal Disable 34
3.3.14. Difficult FLIR Auto Video Track Acquisition During Turns 35
3.3.15. Auto Video Track Loss When Switching Between Narrow and Medium Field of View 36
3.3.16. Opposite Function of the Display Control Panel Scale Switches and FLIR Scale Switch 36
3.3.17. Toggle Capability Between White And Black Hot Only When Not in the Main Menu Screen 37
3.3.18. FLIR Auto Video Track Auto Mode Was Not Optimized 38
3.3.19. Difficult FLIR Manual Gain/Level Adjustment 38

TABLE OF CONTENTS

3.4. COMBAT SAR INGRESS/EGRESS 39
3.4.1. General 39
3.4.2. Navigation Route Use 40
3.4.3. FLIR Jitter During Cueing 41
3.4.4. Improperly Labeled and Unlit FLIR/Tactical Display Switch on the Display Control Panel 42
3.5. COMBAT SAR LANDINGS/TAKEOFFS 42
3.6. REMOTE HELLFIRE LAUNCH 43
3.6.1. General 43
3.6.2. Excessive Workload During Remote Hellfire Missile Shot Setup 44
3.7. AUTONOMOUS HELLFIRE LAUNCH 46
3.7.1. General 46
3.7.2. Difficult FLIR Auto-track During Low Target and Background Temperature Differential 47
3.7.3. Auto Video Track Coast Mode Malfunction 48
3.7.4. Excessive Sensitivity of the FLIR Line of Sight Gimbal Control 50
3.7.5. Absence of Missile Seeker Cone Constraint Information on Horizontal Situation Visual Display 51
3.7.6. Overly Sensitive Attack Course Deviation Indicator 52
3.7.7. Uncommanded FLIR Line of Sight Movement When Switching Between Tactical and FLIR Multi-Function Display Modes 53

4. CONCLUSIONS 54

5. RECOMMENDATIONS 57

BIBLIOGRAPHY 59

LIST OF REFERENCES 62

APPENDICES 65

APPENDIX A 66
APPENDIX B 68
APPENDIX C 86
APPENDIX D 96

VITA 110

LIST OF TABLES

TABLE PAGE

1. FLIR GIMBAL LIMITS 28
2. ACCURACY OF HH-60H FLIR CONTACTS COMPUTED BY PASSIVE RANGING 32
3. FLIR TRACK DATA 34

APPENDIX C

1. LIVEFIRE TEST AND TEST CONDITIONS 87
2. JITTER VS VELOCITY/LOOK ANGLE 88
3. AUTOMATIC VIDEO TRACKER TEST POINTS 89
4. FLIR RESOLUTION 90
5. BORE SIGHT TEST POINTS 91
6. CONSTRAINTS/INHIBITS VERIFICATION (1 OF 2) 92
7. CONSTRAINTS/INHIBITS VERIFICATION (2 OF 2) 93
8. FLIR HAND CONTROL UNIT ATTACK MODE FUNCTIONS (PG. 1 OF 2) 94
9. FLIR HAND CONTROL UNIT ATTACK MODE FUNCTIONS (PG. 2 OF 2) 95

LIST OF FIGURES

FIGURE PAGE

APPENDIX B

1. LOCK-ON BEFORE LAUNCH (LOBL) 76
2. LOAL-DIR MODE 78
3. LOAL-LO MODE 79
4. LOAL-HI MODE 79
5. SEEKER MAJOR COMPONENTS 80

APPENDIX D

1. HH-60H HELICOPTER (1 OF 2) 97
2. HH-60H HELICOPTER (2 OF 2) 98
3. RECOMMENDED FLIR TURRET ORIENTATION 99
4. CONTROL DISPLAY UNIT AND DISPLAY CONTROL PANEL 100
5. ARMED HELICOPTER SUBSYSTEM BLOCK DIAGRAM 101
6. M299 MISSILE LAUNCHER 102
7. REMOTE DESIGNATION 103
8. HAND CONTROL UNIT 104
9. FLIR TURRET 105
10. TACTICAL SYMBOLOGY 106
11. HORIZONTAL SITUATION VIDEO DISPLAY 107
12. FLIR NAV DISPLAY 108
13. FLIR ATTACK DISPLAY 109

GLOSSARY

AGL	Above Ground Level
AGM	Air to Ground Missile
AHS	Armed Helicopter Subsystem
ASUW	Anti-Surface Warfare
CATUM	AGM-114 M-36E Training Missile
COMBAT SAR	Combat Search and Rescue
DATUM	AGM-114 M34 Dummy Missile
FLIR	Forward Looking Infrared
GPS	Global Positioning System
KIAS	Knots Indicated Airspeed
KM	Kilometer
KTS	Knots
LAP	Local Area Processor
LOAL	Lock on After Launch
LOBL	Lock on Before Launch
MIL-STD	Military Standard
NASA	National Aeronautics and Space Administration
NATOPS	Naval Aviation Training and Operational Procedures Standardardization
NM	Nautical Mile
NVD	Night Vision Device
SAR	Search and Rescue
VCR	Video Cassette Recorder
VMC	Visual Meterological Conditions

1. INTRODUCTION

1.1. BACKGROUND

The latest development of the HH-60H program was the integration of the Armed Helicopter Subsystem (AHS). Components were the AN/AAS-44 (V) Forward Looking Infrared (FLIR) and integrated laser detecting-ranging-tracking set, armament controller receiver transmitter, power converter unit, left hand extended pylon, and M299 Hellfire launcher system. The HH-60H primary mission was Combat Search and Rescue (Combat SAR) with secondary missions of Anti-Surface Warfare (ASUW) and logistics support. The AHS was designed to provide HH-60H aircrew with increased situational awareness, discretionary strike capability against multiple platforms, and enhanced night navigation capability. In addition, the AHS was designed to provide autonomous and remote target acquisition, designation, and destruction, and enhanced survivability during Combat SAR and ASUW missions. This thesis investigates the operator workload of the AHS as installed on the HH-60H throughout all mission phases, including the pre-launch, takeoff, enroute, attack, and landing phases of the Combat SAR and ASUW missions. The evaluation was conducted using the Bedford Workload Scale and Naval Air Warfare Center Aircraft Division Developmental Test Phase III A planning and testing guidelines.

The author served as the project officer during the HH-60H AHS developmental test and evaluation and flew on over half of the test flights.

1.2. PURPOSE

The purpose of this evaluation was to assess the operator workload of the AHS as installed on the HH-60H using the Bedford Workload Scale for the Combat SAR and ASUW missions.

2. TEST PROCEDURES

2.1. DESCRIPTION OF TEST AIRCRAFT

The HH-60H, as illustrated in Figures D-1 through D-3, was an all-weather, dual piloted, single main rotor, twin-engine helicopter manufactured by United Technologies Corporation, Sikorsky Aircraft Division. The helicopter was configured with a 20° tilt tractor type tail rotor, a controllable stabilator, conventional fixed landing gear, an external cargo hook, a rescue hoist, and weapons pylons for carrying and launching external stores. In addition, the aircraft was equipped with a flight-rated auxiliary power unit, environmental control system, automatic flight control system, single-point pressure refueling system, helicopter in flight refueling system, Night Vision Device (NVD) compatible cockpit, and the necessary avionics and instrumentation for flight and mission accomplishment.

The aircraft armament system consisted of two M-60D/M-240 machine guns, or two GAU-17 mini-guns, a stores jettison system modified to include full jettison capability to the left hand extended pylon and aircraft survivability equipment. Wiring was also installed for both conventional and infrared position lighting for the left hand extended pylon.

The aircraft was provisioned for landing on ships equipped with a recovery assist, securing, and traversing system. The helicopter was also able to operate from aircraft carriers, combatants, and a variety of other naval and merchant ships. The main rotor

blades, stabilator, and tail pylon could be folded for storage. The helicopter was equipped with two front drive turboshaft T700-GE-401C engines manufactured by the General Electric Corporation. A more detailed description of the aircraft may be found in reference (1).

For the purposes of these tests, aircraft Bureau Number 165154, was representative of a Lot VI production HH-60H fleet aircraft except for installed test instrumentation. Bureau Number 163783 was configured as a fully upgraded Lot I production HH-60H fleet aircraft that included the aircraft survivability equipment upgrade and installed test instrumentation.

2.2. DESCRIPTION OF TEST EQUIPMENT

The HH-60H AHS used the same FLIR and similar armament components as that of the SH-60B Rapid Deployment Kit. The SH-60B installation was evaluated during developmental test at Naval Rotary Wing Aircraft Test Squadron during the period of 12 December 1996 through 31 July 1997. Changes to the HH-60H aircraft mounting locations and AHS software were implemented to reflect a more permanent and robust system installation. The AHS was integrated into the HH-60H through a weapons kit. The weapons kit was comprised of an aircraft kit and mission kit. The aircraft kit was considered to be a permanent installation to the aircraft. The mission kit was removable with an install/reinstall time of approximately 4-6 hours. The specific AHS installation technical directive is contained in reference (2). Both the AHS multi-function display

and the hand control unit were installed in the cockpit only, and the hand control unit was accessible only by the left seat pilot. A complete description of the AHS is contained in appendix B.

2.3. SCOPE OF TESTS

2.3.1. Ground Tests

External power ground tests totaling approximately twenty hours were conducted to familiarize the evaluator with basic system functionality and assess the integration, capabilities, safety, and human factors characteristics of the AHS on the HH-60H aircraft. Specific areas evaluated included FLIR and control display unit pages and menus, ordnance/mission systems functionality, system safety, and operator workload. All ground tests were conducted at Naval Air Station Patuxent River, MD in the Naval Rotary Wing Aircraft Test Squadron Hangar between 10 December 1997 and 14 August 1998. The M-299 Launcher was installed on the left extended pylon with one to four of any combination of the following: AGM-114B M-36E training missile, AGM-114B/K Housemouse, or AGM-114 M-34 dummy missile.

2.3.2. Flight Tests

Flight tests totaling 138.5 hours were conducted to assess the HH-60H AHS. The specific areas evaluated included software, FLIR, ordnance/mission systems, operator workload, human factors, and system safety. Flight tests consisted of captive carriage and

live fire events. All flights were conducted in the local Naval Air Station Patuxent River flying area, Eglin Air Force Base C-7 Hellfire test range facility, and NASA Wallops Warning Areas during day and night Visual Meteorological Conditions (VMC) between 10 December 1997 and 14 August 1998.

The helicopter loading consisted of between three and five crewmembers and an auxiliary fuel tank installed on the left inboard station. In addition, an M-299 launcher was installed on the left extended pylon with one or two of either an AGM-114B/K Housemouse, or an AGM-114 M-36E training missile. Only one live AGM-114B Hellfire missile was installed at a time with no other missiles installed. Detailed test and test conditions are presented in tables D-1 through D-6. All flights were conducted within the limits of the H-60F/H Naval Aviation Training and Operating Procedures Standardization (NATOPS) manual, reference (1), and Naval Air Systems Command issued aircraft flight clearances. The AHS performance was evaluated as defined in the HH-60H Detail Specification, reference (3), the test and evaluation master plan, reference (4), the System Specification for Armed Helicopter Subsystem, reference (5), and MIL-STD-1472 Human Interface Requirements, reference (6). System software performance was evaluated as defined in the Software Requirements Specifications, references (7) through (9).

2.4. METHOD OF TEST

2.4.1. General

Testing followed a minimum risk build-up method beginning with ground tests, followed by captive carriage, over-land (instrumented range) missile firing, and concluded with over-water missile firings. Prior to the first live fire missile event at Eglin Air Force Base, the following ground and captive carry verification tests were performed:

1. Correct command and control functionality verification of the Hellfire missile and M299 launcher.
2. Correct remote designation tactical aids symbology.
3. Laser characterization.
4. Constraints/Inhibits human factors assessment, functional verification.
5. Laser energy tests verifying missile seeker lock-on while on the rail at various altitudes/ranges.
6. Simulated missile launches using remote and autonomous laser designation modes.

Over-land live fire event missile configuration was one live AGM-114B missile. Over-water live fire event missile configuration was one AGM-114B missile with warhead removed. Prior to all live fire events, the missiles used for each event were tested by Redstone Arsenal to ensure proper missile operation. For the flight tests, a high volume data logger and Videocassette Recorder (VCR) were used to monitor the avionics and weapons buses, and cockpit displays. Data were recorded using pilot data cards, MIL-STD-1553 bus recorders, FLIR, VCR, Atlantic Test Range Track Time/Position Systems,

and a laser airborne test system. Complete test methods are contained in reference (10). Operator workload was assessed using the Bedford Workload Scale, reference (11), and is presented in appendix A.

2.4.2. Software Tests

The armament controller-receiver-transmitter, FLIR, and tactical data processor software were evaluated during ground and flight tests. Complete ground and flight test methodology is contained in reference (10). The FLIR was used to track a range target boat traveling at 10 Knots (KTS) along a steady course. During this test, the aircraft flew inbound at 60-100 Knots Indicated Airspeed (KIAS) between 200-1500 ft Above Ground Level (AGL) perpendicular to the boat's course. Closest point of approach of the boat was two Nautical Miles (NM). The test was repeated with the aircraft and boat traveling along the same heading. The helicopter started from behind the boat, and flew along a track offset 2 NM from the track of the boat. During each test run the FLIR was used to track the boat. FLIR contacts were entered into the tactical plot at 30-second intervals. FLIR contact accuracy was evaluated against the boat's position as determined by a Global Position System (GPS) unit on the boat. The tactical data processor generated track was then initiated through the control display unit using the FLIR contacts. The generated course and speed of the boat was recorded. The indicated position, course, and speed were then compared with the GPS position, course, and speed of the boat.

Cue points were entered through control display unit menus at the known coordinates of visually identifiable landmarks. The operator selected cue points while the

aircraft was in a hover and recorded the FLIR azimuth and elevation once the FLIR turret was pointed toward the cued point. The operator then repositioned the FLIR so the landmark was in the center of the FLIR display and recorded the azimuth and elevation. The adjustment needed to bring the cued point to the center of the display was determined afterward. This test was repeated to evaluate the total number of cue points available to the operator.

During all software tests, the control display unit and FLIR menus and displays were evaluated for mission suitability. Overall operator workload was also evaluated during both ground and flight tests.

2.4.3. FLIR

Acquisition range tests were conducted against a Mark III Patrol boat in the Chesapeake Bay. The Mark III Patrol boat was 65 ft long, 18 ft wide, and had a 5.9 ft freeboard. With the aid of a test range controller, the aircraft was vectored toward the patrol boat until the aircrew obtained target detection. The aircraft continued inbound until sufficient target detail was visible to mark target classification. Target classification was defined as sufficient target detail visible to distinguish between combatants and noncombatants. Once target classification range was marked, the aircraft continued inbound toward the target until ship deck activity could be identified. Ship deck activity consisted of a person moving about the deck pointing a simulated gun or missile launcher at the aircraft.

The FLIR was evaluated using ground targets to determine how effectively it could be pointed using the various modes available. The FLIR tracking (Point Track and Area Track) and pointing (Point Mode and Rate Mode) capabilities were investigated using land and sea targets of opportunity and sea based tactical targets provided by the Chesapeake Test Range. The flight tests against the sea targets were flown in the Chesapeake Bay and Atlantic Ocean.

2.4.4. Laser testing

Flight tests were flown against the Improved Mobile Infrared System Target to determine the boresight offset between the FLIR, laser jitter, and percent laser energy on target. A laser airborne test system was used to compute laser centroid position and FLIR reticle position on the target board as a function of time. Laser to FLIR boresight was computed as the average value of the difference between the FLIR reticle and laser centroid for the laser on time. Laser jitter (or stabilization) was computed as the standard deviation of this same difference. Laser energy on target was computed by observing the laser spot video to determine the amount of laser energy on the target during the entire time the laser was used. Range finder accuracy was measured during the test by comparing the aircraft displayed laser slant range to the target slant range computed by the test range tracking radar. All laser tests were conducted in accordance with references (10) and (12).

2.4.5. Ordnance/Missions Systems

2.4.5.1. General

The laser set performance and ability of the armament controller-receiver-transmitter to interface with the M299 Hellfire launcher and associated missiles were evaluated. Specifically, conformance of the armament controller-receiver-transmitter software operation to requirements described in reference (3) was verified. All ground-based laser tests were conducted in a fully enclosed gun-firing tunnel, preventing eye hazard to personnel. Ground and flight test operations followed a logical build-up test sequence so that system capabilities were exercised fully prior to advancing to the next event. Complete test methods are contained in reference (10).

2.4.5.2. Over-land Missile Firings

Three missiles were fired at the Eglin Air Force Base C-7 Hellfire test range. The C-7 range was a Hellfire specific range built by the U.S. Army. The target for the event was a stationary M-60 tank hulk. Before actual live fire events, practice runs were conducted. The practice runs consisted of flying the test profile and the crew conducting a simulated missile firing sequence from target acquisition to simulated missile impact. High-speed film in aircraft mounted cameras was used to document the missile leaving the rail. A ground-mounted silicon vidicon camera was focused on the target to verify target illumination before missile launch. Aircraft time space positioning information data were taken to document exact slant range to the target at missile launch. Throughout the flight path, time space positioning information data of the missile were measured.

Time space positioning information data of the missile allowed for detection of an in-flight missile failure (missile failure flight path was a known profile). All tests loads followed procedures delineated in the Ordnance Support Team approved preliminary AGM-114 Hellfire missile loading/handling checklist for the HH-60H. A firing checklist was developed during SH-60B Rapid Deployment Kit developmental test and evaluation. Lessons from this program, operational tests, and ground tests were incorporated into a new checklist for the HH-60H. All missile firings were conducted in accordance with this checklist.

2.4.5.3. Over-water Missile Firings

Three missiles were fired to assess the AHS operation over water. Test conditions for these events are presented in table C-1. The target for these events was a QST-56 target boat modified to represent an inner-coastal patrol boat. Target speed began at minimum steerage and built up approximately 15 knots. Prior to each live fire event, practice runs were conducted. Silicon vidicon camera data were telemetered to the range boat for recording and for target illumination. Each live fire event required a safety/photo chase positioned a minimum of 2 rotor diameters abeam the test aircraft. Missiles were loaded at Naval Air Station Patuxent River.

2.4.5.4. Mission Maneuvers

Terrain flight simulating Combat SAR ingress and egress was conducted at altitudes between 0 and 500 ft AGL and 0 to 135 KIAS during day and night VMC. All

FLIR operating modes were evaluated during enroute navigation routes.

Confined area landings were conducted during day and night VMC to both prepared and unprepared landing zones. Both FLIR effectiveness and operator workload were assessed during all landings.

2.4.6. Workload Assessment

Prior to test, research was conducted into different methods of evaluating aircrew workload. A major function of human factors engineering throughout system development processes was to ensure that system demands did not exceed the information processing capabilities of the human operator (Feidler, 13). Processing overload was a central factor that led to breakdown in operator performance and to compromises in system safety and effectiveness that resulted from such decrements (Feidler, 13). Mental work was the term that referred to that portion of an operator's limited processing capacity that was actually required to perform a particular task or system function (Feidler, 13). The principal objective of workload assessment was to specify the amount of expanded processing capacity so that existing or potential overloads could be identified and decrements in operator performance avoided (Feidler, 13). Workload assessment has been the subject of extensive research over the past 20 years due to its critical role in the system development process. The development and application of a large number of individual workload assessment techniques was one product of these research efforts. Twenty-eight different techniques used to derive measures of workload were identified during a comprehensive review (Wierwille and Williges, 14) of workload assessment

literature. Classification within three distinct categories of workload measures: (1) subjective opinion procedures, (2) performance-based techniques, and (3) physiological techniques was established for a substantial number of these empirical assessment techniques (Feidler, 13).

At present, the most used and probably the most reliable methods for assessing pilot workload in flight were based on some form of subjective reporting by experienced test pilots (Roscoe, 11). However, subjective opinions were susceptible to bias and preconceived ideas and thus occasionally resulted in false estimates of workload. For more than 15 years, the recording of pilot's heart rates augmented subjective reporting at RAE Bedford. At first, pilots described workload in a relatively unstructured manner. However the need for some form of rating scale was soon apparent. After much trial and error a 10 point rating scale known as the Bedford Workload Scale, appendix A, was developed using the concept of spare capacity. Overall design was based on the Handling Qualities Rating Scale of Cooper and Harper (NASA, 15). During the past 19 years, a number of flight trials used pilot ratings and heart rate responses to assess workload. The rationale for using heart rate in assessing pilot workload was based on the concept of neurological arousal (Roscoe, 11).

Numerous other workload assessment studies have been conducted. Many of these studies included some form of assessment of spare mental capacity for additional tasks. However, the Bedford Workload scale required minimum aircrew equipment for data collection, did not increase program costs, was repeatable, and was widely known and understood within the test community. The Bedford scale has been shown to be a

sensitive indicator of workload in several different types of aircrew tasks. The Bedford scale exhibited consistent sensitivity and has been recommended for general use. The foundational concept of the Bedford scale was that it was natural for individuals to judge the amount of space capacity that remained while they performed a task. For these reasons, the Bedford Workload scale was selected for use during the evaluation of workload levels throughout all tests conducted on the HH-60H AHS.

The Bedford scale consisted of ratings from 1 to 10. A rating of 1 equated to an insignificant workload and a rating of 10 equated to a task that was abandoned due to the pilot being unable to apply sufficient effort. A description of the Bedford Workload scale process that led to the assignment of a workload rating (WL #) is presented below. The workload assessment consisted of tasks and subtasks. An example of a task was an autonomous Hellfire missile shot and a subtask was target auto track. Each subtask was evaluated separately. The pilot entered the decision tree after each flight and worked through the process by asking himself each of the listed questions.

1. Was it possible to complete the task? If not, then WL 10 was assigned since the task was abandoned and the pilot was unable to apply sufficient effort.
2. If it was possible to complete the task, was workload tolerable for the task? If not, then the pilot selected from the following choices:
   2.1. Extremely high workload, no spare capacity, and serious doubts as to ability to maintain level of effort. (WL 9)
   2.2. Very high workload with almost no spare capacity. Difficulty in maintaining level of effort. (WL 8)

2.3. Very little spare capacity but maintenance of effort in the primary tasks not in question. (WL 7)

3. If workload was tolerable for the task, was workload satisfactory without reduction? If not, then the pilot selected from the following choices:

3.1. Little spare capacity, but level of effort allowed little attention to additional tasks. (WL 6)

3.2. Reduced spare capacity. Additional tasks could not be given the desired amount of attention. (WL 5)

3.3. Insufficient spare capacity for easy attention to additional tasks. (WL 4)

4. If workload was satisfactory without reduction, then the pilot selected from the following choices:

4.1. Enough spare capacity for all desirable additional tasks existed. (WL 3)

4.2. Workload was low. (WL 2)

4.3. Workload was insignificant. (WL 1)

2.5. INSTRUMENTATION AND DATA PROCESSING

The aircraft instrumentation package consisted of the Mid-Atlantic Tracking System, a Radar Transponder Slant Range Beacon, an IRIG-B time code generator and receiver with antenna, two externally mounted high-speed cameras, and High Volume Data Logger Model 3100 data bus recorder and associated control panels for each. Prior to take-off, the ground crew electronically synched the time code generator to the Chesapeake Test Range Universal Coordinated Time based broadcast time. Time was

then stamped on the data logger tape each second. The telemetry set consisted of a Mid-Atlantic Tracking System transponder with associated 1553 power interfaces plus an antenna for transmission and the video data-link. Range data from flight tests were collected on 9-track tapes at Chesapeake Test Range and were merged with the aircraft data during post-mission processing. Real-time photography during missile launches was obtained from two Photosonic Model 1-TL motion picture cameras. These 16mm cameras recorded film data at 200 frames per second. One camera was located on the left stub wing and the other on the left side of the tail, forward of the middle portion of the tail fold hinge. The forward camera faced aft toward the front of the launcher and the aft camera faced forward toward the aft launcher area for missile plume and separation data collection.

Test instrumentation used to record the MIL-STD-1553 data buses consisted of a high volume data logger. All ground and flight tests used a full mission recording capability. The high volume data logger recorded all the data busses simultaneously and data could be later extracted.

3. RESULTS AND EVALUATION

3.1. GENERAL

The following results were based on the overall effectiveness of the AHS during developmental test and evaluation events and mission maneuvers. Since specific tactical doctrine has not yet been developed for the AHS equipped HH-60H, basic mission background and assumptions are provided in an attempt to highlight the reasons for specific conclusions and recommendations made in this thesis.

The primary objective of a Combat SAR mission was to recover downed aviators over unfriendly terrain. The HH-60H aircrew attempted to ingress to the known location of the downed aviator, execute a recovery, and then egress safely without detection or initiation of offensive enemy engagement. Aircrew workload during a Combat SAR mission was high, requiring the left seat pilot (primary AHS operator since the hand control unit, figure D-8, was located adjacent to this seat) to perform navigation, obstacle clearance, communications, flight and engine instrument monitoring, and control display unit data entry tasks. The right seat pilot was primarily responsible for flying the aircraft, scanning outside for obstacle and terrain avoidance, and checkpoint and landmark identification. Normally two to three aircrewman were onboard and had access to a control display unit. However, neither a hand control unit nor a multi-function display was installed in the cabin for FLIR operation. In addition, the aircrewmen's primary task

during a Combat SAR was to scan outside the aircraft for obstacle and terrain clearance and survivor location.

The primary objectives of an ASUW mission were detection, classification. track, and destruction of sea surface threats to the carrier battle group. Prior to the integration of the AHS, the HH-60H was limited to visual detection and classification of sea surface threats. The FLIR was designed to provide the means of detection, classification. and tracking. The Hellfire missile system was designed to provide the means of destruction. The left seat pilot was responsible for performing communications, multi-function display tactical updates, FLIR, monitoring flight and engine instruments, and control display unit data entry tasks. The right seat pilot was responsible for flying the aircraft. Of primary concern to the aircrew during ASUW missions was remaining outside of the known threat envelope of coastal surface to air missile sites, oil platforms, and potential targets. Typical aircrew workload during over water ASUW missions was lower than Combat SAR missions since obstacle and terrain avoidance and strict adherence to navigation routes was not required. Due to the close proximity to the Carrier Battle group, assisting friendly platforms will be available during many ASUW missions.

During Hellfire missile launches, the fleet operator should never intentionally launch when out of constraints conditions exist. While inhibits prevented a launch, a constraint allowed the operator to fire a missile. Launching a missile with a constraint, however, did not ensure that the proper prompts were posted following the launch. An example was the LASE NOW prompt that was posted to alert the operator to designate the target following an autonomous launch. If the operator fired a missile with a range

constraint, the LASE NOW prompt would not be posted since the system had no current range information and could not compute the missile time of flight. During remote Hellfire launches, the operator was required to take particular and deliberate care that the tactical plot was absolutely correct since many of the system critical inhibits and constraints were based on the tactical plot. Operator workload and tactical employment considerations will be greatly affected by this requirement.

3.2. MISSION PREFLIGHT AND INITIALIZATION

3.2.1. General

Operator workload and the ability of the AHS to reach operational state rapidly were assessed during mission preflight and initialization for the Combat SAR and ASUW missions. Use of the mission data loader greatly reduced overall workload both during start and initialization, and in later mission phases by allowing for the preprogramming of navigation way points, flight plans, known threats, surface contacts, survivor position, and potential Hellfire targets. Upon conducting a system reset after auxiliary power unit start, the mission data loader information was entered into the tactical data processor and the operator was then ready to energize the FLIR for cool down and conduct Hellfire missile built in tests (WL 3). FLIR cool down required an average of approximately five minutes. During FLIR cool down other mission tasks could be performed by the operator including manual entry of octal codes, reset of the missile launcher, verification of proper armament system operation, and reading the checklist to the pilot. Mission preflight and

system initialization from complete shutdown could easily be accomplished within 10 minutes.

3.2.2. Incorrect Magnetic Variation When Initializing With a Blank Cartridge Installed in the Mission Data Loader

During a system reset using the mission data loader, the operator was prompted to enter the magnetic variation value or accept the mission data loader derived value as default. The tactical data processor software was designed to determine if the magnetic variation could be calculated for the current aircraft position from the mission data loader variation tables, then post an alert indicating "Mission Data Loader Derived Value". If the operator accepted the default, the tactical data processor was designed to update magnetic variation to the mission data loader derived value for current aircraft position. If an operator performed a system reset when magnetic variation could not be calculated from the mission data loader table, the tactical data processor was designed to prompt the operator to enter a magnetic variation value or accept the previous value. During test, a system reset was performed with a mission data loader cartridge installed that contained no magnetic variation tables. During this test, the magnetic variation prompt was displayed with an erroneous "Mission Data Loader Derived Value" alert. The operator accepted the default, and the magnetic variation value did not change. During COMBAT SAR missions, initializing the navigation systems with a mission data loader cartridge installed that contained no magnetic variation tables may result in erroneous magnetic variation values without operator knowledge. This incorrect value will cause erroneous

horizontal situation visual display true heading values, resulting in large navigation errors when using a chart to compute true headings on ingress and egress routes. The aircraft will be exposed to increased risk from hostile ground or air units, jeopardizing the aircraft and crew.

3.3. ASUW MISSION

3.3.1. General

The AHS equipped HH-60H was quantitatively and qualitatively evaluated for the ASUW mission during developmental test and evaluation events and mission maneuvers. Particular attention was given to operator workload during search, detection, classification, and attack of surface targets in both open ocean and littoral environments. Throughout all mission tasks, significant workload increase was caused by the upward orientation of the FLIR turret. HH-60H aircrew use of the FLIR for search, detection, identification, and attack will be primarily during ASUW missions. The FLIR evaluation results have therefore been included in the ASUW section.

3.3.2. FLIR Maximum Detection Range

The FLIR maximum detection range was evaluated for suitability to conduct the ASUW mission. Acquisition range tests were conducted against a MKIII patrol boat in the Chesapeake Bay. The patrol boat was 65 ft long, 18 ft wide, and had a 5.9 ft freeboard (6 m critical dimension). The aircraft was flown toward the boat from an

abeam position at 1000 ft Above Ground Level (AGL) and 60 KTS ground speed. The FLIR settings ranged from wide field of view to 4X field of view using both white and black hot polarity. Light conditions ranged from civil twilight to darkness with no moonlight. Initially the operator preferred using white-hot polarity As cooling continued after sunset, however, the operator preferred black-hot polarity. With the aid of a test range controller, the aircraft was vectored toward the patrol boat until the operator detected the target. Tests were conducted with calm seas. Air temperature varied from 36°F to 30°F during test. Dew point temperatures varied from 25°F to 26°F. Target boat hull delta temperatures averaged 2.3°F. Target detection ranges were affected by FLIR banding phenomenon as a result of the calm seas. Calm seas may have caused temperature variations to occur in the water causing dark and light bands to occur in the FLIR image. With black hot chosen for FLIR polarity, detection ranges were shortened by as much as a factor of two when the target was in the dark band. While acquisition ranges are classified, FLIR detection ranges were satisfactory for the mission. During later flight tests conducted in conditions of high humidity and ambient temperature, a significant decrease in maximum FLIR detection range was noted.

3.3.3. Maximum Classification Range (Combatant/Non-Combatant)

The maximum classification range of a small patrol boat as a combatant or non-combatant was quantitatively determined for suitability to conduct the ASUW missions. The target boat was the same as discussed in paragraph 3.3.2. The aircraft was flown toward the boat from an abeam position at 1000 ft AGL and 60 KTS ground speed. The

FLIR settings ranged from wide field of view to 4X field of view using both white and black hot polarity. Light conditions ranged from civil twilight to darkness with no moonlight. After initial target detection was made, the aircraft continued inbound to the target from the abeam position. The FLIR was set for narrow field of view and polarity was selected as desired by the operator. For identification of the target as combatant, the operator preferred to use white-hot polarity. The features of the target boat used by the operator to classify it as a combatant were evident bow and bridge features. An engineer located in Chesapeake Test Range recorded the combatant identification range. Based on visual observations of the crew, the identification of a small patrol boat in narrow field of view at 1000-ft AGL as a combatant was satisfactory to conduct the Combat SAR and ASUW missions.

3.3.4. FLIR Display Quality

The FLIR display quality was qualitatively evaluated using black and white hot polarity throughout all developmental test and evaluation flights. The quality of the FLIR display was outstanding in the medium and narrow fields of view. During repositioning for test points the aircraft flew by a small island at 1000 ft AGL. Objects as small as houses and cars could be easily distinguished and positively identified with the FLIR in black hot polarity and narrow field of view. The operator was able to identify easily features as small as windows in a house from an approximate distance of 5 NM. During overflight of a Group III merchant, the operator was able to clearly see the details of the

superstructure and the cargo containers on board. During NVD operations, no blooming or interference with NVDs was noted. The quality of the FLIR display was satisfactory for the Combat SAR and ASUW missions.

3.3.5. FLIR Display Symbology

The FLIR symbology was evaluated in day and night VMC during captive carriage and live fire missile events for the Combat SAR and ASUW missions. The FLIR navigation page presented in figure D-12, attack page presented in figure 13, and menu pages were each evaluated. The menus were in general designed in a logical manner, allowing the operator quick access to frequently used items. FLIR elevation and azimuth scales, FLIR modes, laser reticle, field of view marks, and auto track box were presented in both attack and navigation modes. When selected, attack mode presented a constraint/inhibit box, missile symbology below the box, and laser and missile menus to the right of the auto video track box. A single navigation page de-clutter mode removed the elevation scale, field of view marks, and FLIR modes while two attack page de-clutter modes removed the menu and then the elevation scale, field of view marks, and FLIR modes. The constraint/inhibit box, auto video track box, missile symbology, and laser reticle could not be de-cluttered. The FLIR main menu was accessible only through the navigation page. Throughout most environments, including NVD operations, symbology was legible to the operator with both black and white polarities selected. The attack page provided all necessary information to the pilot during autonomous missile shots, and most information during remote shots. The FLIR display symbology was satisfactory for the

Combat SAR and ASUW missions.

3.3.6. Tactical Display Symbology

The tactical display symbology, presented in figure D-10, was evaluated in day and night VMC during captive carriage and live fire missile events for the Combat SAR and ASUW missions. The displayed tactical symbology depended upon the FLIR page selected. In the FLIR navigation page, the tactical display included the aircraft, reference marks, contacts, and the remote designator symbols if selected. With the FLIR attack page selected, a FLIR footprint, priority missile, target course, speed, bearing, and range were all presented. With remote mode selected, a 30° inhibit cone and 60° constraint cone were presented to alert the operator. Throughout all environments, the tactical display symbology was satisfactory for the CSAR and ASUW missions.

3.3.7. Difficult Auto Video Track at High FLIR Look Down Angles

The FLIR was designed as a two-axis system that allowed for 360° of movement in azimuth with no gimbal stops and up to 165° of movement in elevation, with upper and lower gimbal stops. With the FLIR turret mounted on top of the nose mission mount platform, the upper gimbal stop was set at +105° and the lower gimbal stops were set as follows: -25° in narrow field of view, -30° in medium field of view, and -60° in wide field of view. The FLIR Automatic Video Tracker was designed to track targets within its Field of Regard. When the gimbal stops were reached and the FLIR could no longer rotate to track the contact, the auto video track broke lock, as designed, and contact with

the target was lost. During flight tests designed to determine the FLIR compatibility with the HH-60H Hellfire mission, the auto video track was used to track targets directly off the aircraft nose as the aircraft maneuvered according to the parameters listed in table 1. Narrow field of view was used for the test since it provided the highest FLIR optical magnification. The aircraft was turned for 90° of heading change while maintaining FLIR auto video track on the contact at each of the test points. The aircraft failed to reach 90° of heading change on all of the 30° and 45° bank angle test points prior to the FLIR reaching the lower gimbal stop and the auto video track breaking lock. The heading change completed prior to reaching the gimbal stop at each test point is also provided in table 1. In order to reacquire the target the pilot had to roll wings level, the operator had to slew the FLIR back to the target, reacquire auto video track, then re-enter the turn at a more shallow angle of bank (WL 6). The difficult auto video track at high FLIR look down angles will jeopardize the successful completion of Combat SAR and ASUW missions. Specifically, when pilots are required to maneuver the aircraft greater than 30° bank angle to avoid obstacles and small arms fire during the final inbound run during a Hellfire Missile launch, FLIR contact with the target will likely be lost, resulting in an aborted missile launch. In addition, the tactic of launching a Hellfire Missile, and then turning away from the target to avoid closing the target will likely result in loss of contact with the target and a missed shot.

Table 1
FLIR GIMBAL LIMITS

Altitude (ft MSL)	Airspeed (KIAS)	Angle of Bank (°)	Target Range (KM)	Initial Target Bearing (deg)	Heading Δ (deg)
200	70	20	8	0	> 90
200	70	30	8	0	49
200	100	20	8	0	> 90
200	100	30	8	0	45
200	120	20	8	0	> 90
1,000	70	20	8	0	> 90
1,000	70	30	8	0	64
1,000	70	45	8	0	29
1,000	100	20	8	0	> 90
1,000	100	30	8	0	49
1,000	100	45	8	0	27
1,000	120	20	8	0	> 90
1,000	120	30	8	0	43
1,000	120	45	8	0	26

3.3.8. Excessive Workload Required to Switch between Tactical Plot and FLIR Display

The FLIR operator could select either the FLIR image or tactical plot on the multi-function display. This selection could be changed by depressing a blank, unlit key on the display control panel, figure D-4, or by selecting TAB, MODES, and line function key number 6 on the control display unit. Switching from FLIR display to tactical display and back to FLIR display using TAB, MODES, and line function key number 6 required up to a total of six keystrokes (WL 6). Performing the same operation at night using the display control panel was also very difficult and time-consuming since the blank key was not lit. During ASUW missions, frequent switches between FLIR and tactical displays will be required to update the tactical display and verify FLIR contact positions. The excessive workload required during switch from FLIR and tactical display will significantly increase the amount of time required for the operator to enter a FLIR contact, particularly during night missions when the blank display control panel key must

be identified. During setup for a remote Hellfire missile launch, switching between the tactical and FLIR displays was a frequent requirement to ensure proper shot geometry and setup. The operator's attention was diverted from outside scan and the multi-function display in order to locate the toggle switch, increasing operator workload and resulting in additional time to complete a remote Hellfire Missile launch. The author recommends adaptation of the unused FLIR right control switch for use as a toggle between tactical and FLIR displays.

3.3.9. Operator Workload During Manual Entry of FLIR Contacts

Operator workload during entry of FLIR contacts into the tactical data processor and tactical plot was evaluated during day and night VMC test and mission events. During entry of passive contacts, the operator entered positions through the display control panel and control display unit. The keystroke series included selecting the CONT key on the display control panel and then selecting FLIR. The operator then had the option of updating the position of the passive FLIR contact if necessary. Entry of laser contacts was more difficult, requiring the use of both hands by the operator. The operator was required to range the contact to obtain a valid laser range. The operator first lifted the trigger guard on the hand control unit, depressed the laser trigger, and then waited for a valid laser range, latitude, and longitude (WL 3). The operator was then required to use his other hand to press the CONT key and select FLIR (WL 4). An alternate, one handed method of entering laser contacts was to obtain a valid laser latitude and longitude and then release the laser trigger and enter the contact within fifteen seconds, the time at

which the range information was cleared (WL 3). The operator workload during manual entry of FLIR contacts was satisfactory for the ASUW and Combat SAR missions.

3.3.10. Inaccurate FLIR Computed Passive Target Range

The passive ranging accuracy of the AHS was evaluated for suitability to conduct the ASUW mission. When the laser set was not in use, the FLIR computed target range based on altitude input from the radar altimeter and FLIR depression angle. This range was displayed to the operator on the bottom right corner of the FLIR display and was also used to generate FLIR contacts. When entered, FLIR contacts could be presented on the tactical display. FLIR contacts could be designated as Hellfire targets. Surveyed landmarks with known latitude and longitude were used as contacts. Aircraft position data were obtained through precision coded GPS. The aircraft was established on an inbound track pointed toward a surveyed ground target. The FLIR was then used to detect, classify, and track the target. Once the target was detected and classified, at a range of approximately 5-7 NM. a manual FLIR contact was entered into the tactical display. A new manual contact was entered approximately every 30-45 seconds as the aircraft continued inbound to the target. Quantitative data is presented in table 2. Initially, the first contact entered showed an inaccuracy of about 1-2 NM at an approximate distance of 5-7 NM (25%) from the target as estimated by the pilot. As the aircraft flew closer to the target, the contacts migrated toward one another and produced a more accurate position. Since the AHS used FLIR look down angle and altitude as the variables in a Pythagorean equation, position accuracy was directly dependent upon

greater look down angles. Accurate FLIR passive range data required the operator to estimate target range, note the FLIR look-down angle, determine the correct aircraft position relative to the target required for accurate position data, then verbalize this information to the pilot (WL 7). During ASUW missions when laser set use is not possible, the passive ranging inaccuracy of stationary and moving targets by the system will cause the operator to obtain accurate range data through alternate means. The resulting actions may include either flying inbound to the target, increasing altitude for greater FLIR look down angle and accuracy, or reliance on another platform for accurate range data. Mission delays and increased aircraft exposure to enemy weapons and targeting will occur. Increased operator workload will be required to resolve ambiguous range data. The author recommends prohibiting the use of passive FLIR contacts for Hellfire targets and the incorporation of a discussion of inherent sources of FLIR passive ranging inaccuracies in applicable sections of the operator's tactical manual and NATOPS manual.

Table 2
ACCURACY OF HH-60H FLIR CONTACTS COMPUTED BY PASSIVE RANGING

Altitude (ft)	Actual range (nm)	FLIR computed range (nm)	Actual target bearing (mag)	FLIR computed bearing (mag)	Radial error (yd)
203	3.9	1.2	258	257	5428
216	2.9	1.6	257	256	2609
217	1.9	1.9	257	257	87
214	0.92	0.54	259	258	767
404	5.0	0.86	90	91	8302
342	4.0	3.0	90	90	1976
358	3.0	1.6	90	90	2706
388	2.0	1.1	89	88	239
397	0.97	0.85	89	88	239
794	4.9	4.6	252	252	574
794	3.9	2.4	252	251	3208
761	2.6	2.0	247	246	1192
763	1.9	2.0	243	242	189
782	0.97	1.0	224	223	105

3.3.11. Inaccurate Position of Passive FLIR Contacts

The AHS integration included a feature to enter a FLIR contact symbol into the tactical data processor for display on the multi-function display tactical plot. From this contact, latitude and longitude could be determined by hooking and verifying the symbol. The FLIR contact could also be used as a Hellfire target. The accuracy of entered FLIR contacts was evaluated during developmental test and evaluation. Surveyed landmarks and precision coded GPS were used as the positions of the contacts and aircraft respectively. During test, aircraft and contact position were recorded along with the indicated contact position. FLIR contact position inaccuracy was a direct result of the inaccurate FLIR computed passive target range described in paragraph 3.3.10. Use of passive FLIR contacts as Hellfire targets will lead to an inaccurate tactical solution

calculated by the AHS. Missile inhibits and constraints were based on the positions of the Hellfire target and the remote designator. Safe and effective use of passive FLIR contacts as Hellfire targets required the operator to enter the FLIR contact, compare it to the actual target position, and then obtain the target position through alternate methods. Methods included mark-on-top the target, a friendly radar-equipped platform, or through the remote designator or launch aircraft ranging the target prior to launch (WL 7). The inaccurate position of passive FLIR contacts will cause incorrect FLIR inhibits and constraints, resulting in the launch of a missile that will not acquire the target laser return from the remote designator and will subsequently miss the target. In addition, increased risk of exposure to enemy units will result when obtaining exact target position. The author recommends removal of the FLIR passive range and contact functions.

3.3.12. Inaccurate FLIR Track Function Course and Speed Data

The FLIR track function was evaluated during day and night VMC captive carriage flight tests at altitudes between 500 ft and 1000 ft AGL. The aircraft was flown toward a target from an abeam position. After use of the auto track function of the FLIR to track the target for 20-40 seconds, the FLIR track line function key on the track page was depressed at the point where the aircraft was 3 NM from the target. The results are presented in table 3. Based on the visual FLIR picture, only runs 3 and 4 provided an accurate course for the target. The AHS generated target speed provided was inaccurate for all runs. During passive FLIR track of stationary and moving targets the operator must consider all FLIR track course and speeds inaccurate and either laser ranging of the

target or reliance on an alternate radar or laser equipped platform will be required (WL 5). During ASUW missions the erroneous information provided by the FLIR track function will provide misleading information to the operator, resulting in increased ambiguity and mission delays.

Table 3
FLIR TRACK DATA

Run(1)	Altitude (ft AGL)	TGT Time	Target Position		TGT Crs (°M)	TGT Spd (kts)
			Latitude	Longitude		
1	1000	01:16	38 19 23N	076 19 50W	010	0
2	1000	01:25	38 12 05N	076 16 43W	010	0
3	1000	01:29	38 12 13N	076 17 18W	334	84
4	500	01:39	38 12 56N	076 17 40W	354	196

Note: (1) All runs were made from the target's abeam.

3.3.13. Uncommanded FLIR Gimbal Disable

The FLIR system was equipped with elevation and azimuth gimbal assemblies that allowed FLIR turret rotation. During numerous test flights, the FLIR displayed a gimbal disable failure message on the FLIR display at least once during each flight. The failures occurred randomly with no repeatable trend noted. Once the fault message was displayed, the operator lost control of the gimbal and could no longer slew the FLIR turret. Full functionality could only be restored by cycling the FLIR power or by executing a FLIR cold start. Uncommanded FLIR gimbal disable conditions will cause the operator to have the aircrewman cycle FLIR power to restore normal operation (20 sec delay), note the present FLIR line of sight, move it to the estimated area of the contact,

and then reacquire the contact (WL 7). While uncommanded FLIR gimbal disable was random and unpredictable, a failure subsequent to an autonomous Hellfire missile launch would result in a missed shot and potential unintended collateral damage.

3.3.14. Difficult FLIR Auto Video Track Acquisition During Turns

The FLIR auto video track capability was evaluated while tracking a heated target board during day and night VMC. FLIR settings were black polarity and point mode with the auto video track set in both point and area track. Initially, a wider field of view was used for target acquisition followed by selection of a more narrow field of view to identify and then track the target. The aircraft was turned inbound at a range of approximately 3.5 NM at an altitude of 1,000 ft AGL. Bank angle varied from wings level to 45° both left and right. During a turn, auto video track lock up of a target was difficult, requiring the operator to adjust for the horizontal relative motion by determining the relative rate of motion, slew the FLIR at the appropriate rate until the target was centered, and then depressing the guarded trigger (WL 7). If the auto video track did not acquire or broke lock with the target during the turn, the FLIR response was unpredictable in that at times the reticle would remain on the target, while at other times the FLIR turret would rapidly slew away horizontally. The operator was required to determine the present direction of the FLIR, the bearing of the target, change to a wider field of view, and then slew the FLIR back to the area of the target and repeat the above procedures (WL 7). During ASUW missions, aircraft maneuvers of 30° and greater may cause an increase in operator workload while automatically tracking a target, resulting in loss of

FLIR track or complete loss of a FLIR contact.

3.3.15. Auto Video Track Loss When Switching Between Narrow and Medium Field of View

The FLIR had an automatic video track that was designed to keep the FLIR line of sight pointed at a tracked target. During flight tests of the auto video track, it frequently broke lock when the field of view was switched from narrow to medium field of view. The loss of track occurred during tests of both area and point track modes. The auto video track loss when switching between narrow and medium field of view will require the FLIR operator to recenter the target and then reengage the auto video track (WL 4). During Combat SAR and ASUW missions, auto video track loss when switching between narrow and medium field of view will cause increased operator workload, resulting in mission delays and potential loss of FLIR contacts.

3.3.16. Opposite Function of the Display Control Panel Scale Switches and FLIR Scale Switch

The FLIR hand control unit was evaluated for suitability for the Combat SAR and ASUW missions. During FLIR pointing and tracking tasks, it was noted that the hand control unit operation sense was opposite of the display control panel tactical scale switches. To scale down on the tactical display, the down button was pressed. To scale up the up button was pressed. On the hand control unit, pressing the left control switch up moved the FLIR to a narrower field of view and increased magnification. When

selecting FLIR field of view and tactical display scale, the operator must make special effort to recall the correct movement of the switches prior to execution (WL 4). Pressing the left control switch down moved the FLIR to a wider field of view and decreased magnification. During Combat SAR and ASUW missions, the opposite sense of the HCS and display control panel switches will confuse the FLIR operator, resulting in increased operator error and mission delays when selecting the proper FLIR or tactical scale.

3.3.17. Toggle Capability Between White And Black Hot Only When Not in the Main Menu Screen

Display of video was possible when settings were changed on the FLIR main menu page. FLIR video was shown as either white hot or black hot, depending on the environmental conditions and scene contrast. Attempts to read text over video were difficult, especially if the text was the same color as the majority of the display. Toggling to the opposite polarity quickly made the text readable, but the operator was required to first exit the main menu page, go into either the NAV or Attack pages, toggle WHT/BLK HOT, then return to the menu page (WL 6). Not only was this inefficient, but the confusing switch sense of the hand control unit will cause frequent operator errors when changing pages and toggling polarities. The operator may wish to make changes to setting on the FLIR main menu page during any of the mission phases. During non-critical mission phases, it requires minor operator compensation for the operator to change modes to toggle the polarity setting in order to read the menu text. This will result in operator fatigue and increased workload. During critical mission phases, this

added layer of complexity will cause the operator to perform additional steps to effectively employ the weapon system, resulting in mission delays and Hellfire missile launch aborts.

3.3.18. FLIR Auto Video Track Auto Mode Was Not Optimized

The FLIR was designed to track targets using an automatic video track function. The auto video track was designed with three operator selectable track modes: point; area; and auto. Point track mode (or centroid track) was designed to track the centroid of the target hot spot. Area track mode (or correlation track) was designed to track the scene or pattern enclosed by the track box. Auto track mode was designed to automatically select the best track mode, either point or area. depending on the scene. Use of the auto video track in auto track mode during flight tests resulted in default to point track first, regardless of scene. This resulted in the loss of tracks that would have been optimally tracked in area track mode. The non-optimized auto track mode will require the operator to enter the FLIR menu, manually select area mode, and then exit the menu and reacquire the target (WL 6). This will cause increased operator workload and mission delays, resulting in delayed engagement of hostile contacts.

3.3.19. Difficult FLIR Manual Gain/Level Adjustment

The FLIR was equipped with both automatic and manual gain and level adjustments that were evaluated during captive carriage flight tests. Under most conditions, the automatic gain/level adjustment local area processing was adequate.

However, since local area processor optimized gain and level over the entire scene, target contrast in relation to the background in the area of the scene immediately surrounding the target was not always sufficient for the operator to resolve the target from the background clutter. This phenomenon was most evident when searching for targets on the horizon. To overcome this phenomenon, manual gain and level adjustments were used to optimize the target to background clutter contrast in the immediate area of the scene containing the target. Gain and level were each adjusted manually by sequencing a series of three digits with a switch on the FLIR hand control unit. Also, since gain and level must each be adjusted using the same switch, each was adjusted independently of the other. Changing the FLIR manual gain/level settings required the operator to enter the FLIR main menu, select gain level, toggle up once, depress the right control switch, then toggle right to adjust three numbers each for gain and level settings, one number at a time (WL 5). If the operator toggled to the ones digit, the tens and hundreds digits would then increase or decrease in a corresponding fashion. Difficult FLIR manual gain/level adjustment will cause the operator to spend additional time and effort optimizing the FLIR image, or accept a degraded automatically adjusted image. A decreased probability of successful target acquisition and identification will result.

3.4. COMBAT SAR INGRESS/EGRESS

3.4.1. General

During day and night training flights simulating Combat SAR ingress and egress, the most useful modes of FLIR operation were offset forward and scan modes. Both modes allowed the FLIR operator to navigate from a chart, make radio calls, and backup

the right seat pilot tasks. An additional option available to the operator was to enter cuepoints on the navigation waypoints and keep the FLIR pointed on each checkpoint. However, the cuepoint jitter will cause the operator to take the FLIR out of cue mode and leave it in point mode, resulting in FLIR drift from the checkpoint. Since most checkpoints are not sources of heat, auto video track will most likely be ineffective. In addition, placing the FLIR reticle in the area of a checkpoint instead of either offset forward or scan mode will decrease the operator's ability to discern obstacles or hazards either in front or below the aircraft.

3.4.2. Navigation Route Use

The FLIR was evaluated during developmental test and evaluation for effectiveness and suitability for the Combat SAR mission during terrain flight between 500 and 100 ft AGL. The FLIR was oriented in offset forward and scan modes using white and black hot polarity. Copilot workload while flying a Combat SAR ingress or egress included navigation, obstacle clearance, and backup instrument scan, and allowed very little time to operate the FLIR. Although the FLIR was extremely effective at identifying high-tension power lines, smaller, utility pole type power lines were less apparent. The FLIR provided the operator with the capability to verify navigation checkpoints during high and low moonlight level conditions. The FLIR also served to complement NVDs in most environmental conditions. Use of the FLIR in offset forward or scan modes during Combat SAR ingress and egress required the operator to make minor elevation corrections to compensate for altitude variations (WL 3). Frequent

switching between tactical display and FLIR display, a deficiency discussed in paragraph 3.3.8, was required in order to maintain navigation waypoint situational awareness. The author recommends incorporation of an overlay function so that the tactical plot may overlay the FLIR display, reducing the operator workload. In addition, incorporation of a hand control unit and multifunction display in the cabin would allow the aircrew to operate the FLIR and relieve the pilot workload.

3.4.3. FLIR Jitter During Cueing

The FLIR incorporated a cue mode that commanded the FLIR line of sight to a latitude and longitude selected by the operator. When cue mode was selected, the FLIR picture jittered rapidly in an oscillatory, horizontal motion. FLIR jitter during cueing will cause the intended target to be difficult to see on the FLIR display. After using cue mode to get the FLIR in the vicinity of the target, the operator must then deselect cue mode and use point mode to move the FLIR reticle directly on the target prior to use of the auto video track (WL 5). These procedures will result in increased operator workload during re-visitation of previously detected and entered FLIR contacts. Additionally, the jitter may induce pilot vertigo and disorientation. The cause of jitter was likely a function of inadequate tactical data processor update rate of target position to FLIR coupled with changing aircraft and target geometry.

3.4.4. Improperly Labeled and Unlit FLIR/Tactical Display Switch on the Display Control Panel

The FLIR image was displayed on the multi-function display and the operator could switch between FLIR display and tactical display through an unlabeled and unlit display control panel key. The use of a blank, unlit key to switch between tactical and FLIR display at night caused the operator to direct attention to the display control panel and use alternate lighting to identify the key (WL 5). The Combat SAR mission will most likely be flown at night and frequent switching between multi-function display modes will be required during route navigation and remote Hellfire shot setup. The improperly labeled and unlit FLIR/tactical display switch on the display control panel will cause the operator to use excessive amounts of time identifying the key, resulting in distraction from navigation and external obstacle clearance tasks.

3.5. COMBAT SAR LANDINGS/TAKEOFFS

During takeoff and landings conducted to unprepared landing zones during day and night VMC, the FLIR was evaluated for workload and effectiveness in identifying potential obstacles and hazards. FLIR modes tested included all fields of view, white and black hot polarity, and offset forward mode. In both wide field of view and medium field of view, the FLIR resolution was not high enough to be useful in identifying objects in landing zones while during landing zone assessment or on final approach. Narrow field of view, 2X and 4X provided enough resolution to identify objects, but the orientation of

the FLIR turret and the lower gimbal limit caused the FLIR to frequently reach its limit during reconnaissance passes over the landing zone and at typical nose up attitudes used during approaches. In addition, the operator was required to make continuous vertical corrections to the FLIR during landings due to the frequent pitch corrections used by the pilot to maintain glide slope. The high workload associated with landing in unprepared landing zones, risk of damage to the FLIR turret lens, and the distraction to the operator from clearing the left forward area of the aircraft during confined area landings will prevent the use of the FLIR during Combat SAR takeoffs and landings.

3.6. REMOTE HELLFIRE LAUNCH

3.6.1. General

Operator workload during remote Hellfire missile launches was high (WL 7) during initial setup of the tactical plot and during updates to the plot during dynamic maneuvering by the aircraft, remote designator, and target. Subsequent to missile launch, however, operator workload was low and consisted of monitoring the target to ensure missile impact (WL 3). In a multiple target scenario, or with the intent of multiple launches, the operator was immediately concerned with set up for the next shot. Due to the lower overall operator workload subsequent to launch, remote mode will be the preferred method for HH-60H Hellfire Missile launch. Operator workload was minimized with both the launch aircraft and helicopter remote designator both in a hover. Use of remote designation mode with both the launch aircraft and the remote designator

in forward flight will significantly increase operator workload and will increase errors in the tactical plot.

3.6.2. Excessive Workload During Remote Hellfire Missile Shot Setup

The HH-60H AHS was evaluated for operator workload during setup for overland and overwater Remote Hellfire Missile shots. Overall operator workload was high, requiring numerous keystrokes and switches between tactical and FLIR displays. During this time, the operator's head was down in the cockpit and very little spare capacity remained. The steps were as follows:

1. Verify correct octal code setting-Display control panel (Select FLIR display, press ATTACK, page down, press OCT CODES line function key, then verify the codes) (WL 5).
2. Select remote mode-Hand control unit (Select FLIR display, depress right control switch; right control switch down six times; right control switch right, right control switch down, depress right control switch; thumb switch) (WL 6).
3. Enter remote designator position-Display control panel (Select tactical display, press ATTACK, page down, press remote designator POS, press LAT/LONG line function key, then enter the LAT/LONG) (WL 5).
4. Enter target position-Display control panel (Select tactical display, press CONT, select either a FLIR contact or enter through L/L, grid, hook, or ACFT) (WL 6).
5. Select hellfire target-Display control panel (Select tactical display, place the hook on the target, press VRFY, press FTGT) (WL 5).

6. Select tactical display and verify correct positioning of the remote designator, target, and that the 30° and 60° lines were correct with a double chevron present on the target (WL 6).
7. Pilot select ATK on the horizontal situation visual display to ensure display of steering cues (WL 2).

The operator used the auto video track function to track the target. Upon designation of the target by the remote designator, the operator verified that the missiles were tracking the laser energy by noting a solid ball at the top of the missile symbol. Upon launching the missile, the operator could then verify missile launch by noting the disappearance of the missile symbol. The operator could continue to track the target to verify missile impact.

The operator workload will be greatly influenced by the state of both the target and remote designator. If one or both are moving, continuous position updates will be required to ensure correct shot geometry. Due to the inaccuracy of the FLIR track function, paragraph 3.3.12, position correction required placing the cursor on and verifying the symbol, pressing correct, and then selection of the type of update, (lat/long, hook, or aircraft) (WL 7). Since the HH-60H was not radar equipped, the operator relied upon one of the following: friendly units to communicate position information, updates from the remote designator, or by marking on top of each unit (not necessarily a prudent option). An alternative would be to range the target with the ILRDTS, but this would identify the launch platform for enemy units.

A remote Hellfire shot had advantages since the aircraft could launch a missile, then depart the area and allow the remote designator to designate the missile. The highest workloads will be experienced during tactical plot setup prior to missile launch. Since the system launch constraints, inhibits, bearing, and range information rely exclusively upon the tactical plot positions, accurate positions of the target and remote designator were critical to a successful missile shot. Errors in the tactical plot could allow the operator to fire a missile without adequate laser energy return due to a cone constraint (although the solid seeker ball must be confirmed prior to launch). In a worst case scenario, the operator could fire the missile with the remote designator in the 30° cone, setting up potential fratricide.

3.7. AUTONOMOUS HELLFIRE LAUNCH

3.7.1. General

Autonomous Hellfire designation differed from remote Hellfire designation in that the highest operator workload levels were encountered subsequent to missile launch. Specifically, the operator was required to maintain the laser reticle on the target throughout the flight of the missile to ensure a hit. The auto video track greatly reduced operator workload both during identification and designation, but auto video track performance was directly dependent upon environmental conditions. If auto video track was lost, operator workload increased significantly since maintaining the reticle on the target manually was difficult. Auto video track loss was possible during missile launch

since the missile exhaust caused the auto video track to enter coast mode. An additional system deficiency that will increase workload during an autonomous launch was the upward orientation of the FLIR turret. Firing the missile in forward flight and then turning away from a target at greater than a 30° bank angle will cause the auto video track to break lock, resulting in loss of laser designation capability and a missed shot. The author recommends the method of entering a hover and then firing the missile. However, this method may possibly cause the aircraft to remain exposed to the target for longer periods.

3.7.2. Difficult FLIR Auto-track During Low Target and Background Temperature Differential

The FLIR auto video track performance was evaluated during several practice and one live 8 KM autonomous LOAL-H Hellfire missile shot with low target and background temperature differential. FLIR modes used were point track, white hot, and 4X field of view. The target was a 20 ft long tank augmented by approximately 100 lb of charcoal contained in a drum internal to the tank. FLIR auto video track was difficult to maintain since high ambient temperatures resulted in very little contrast between the target and surrounding terrain. Numerous target run-ins were required to obtain adequate auto video track performance and engagement of the FLIR auto video track often resulted in initial track and subsequent auto video track loss. The operator was required to reengage auto video track, wait for auto video track lock, and then after auto video track loss attempt to reacquire automatic video track (WL 6). During a live missile launch, the

exhaust from the missile caused the auto video track box to expand (enter coast mode) until the missile had cleared the FLIR field of view, and then lock on the target again. The reticle drifted off to the right, however, requiring the operator to slew the FLIR back to the left in order to designate the target (WL 4). The difficult FLIR auto video track during long range Hellfire missile shots will cause the aircrew to either close with the target (reduce range to target) or risk auto video track loss, jeopardizing the successful completion of the shot. The author recommends improvement of the auto video track performance in low target and background temperature differentials. Also, the susceptibility of the auto video track to missile exhaust was directly related to the target and background differential and strength of auto video track.

3.7.3. Auto Video Track Coast Mode Malfunction

The FLIR auto video track was evaluated during live overland and overwater Hellfire missile shots. If loss of target auto track occurred due to low target background contrast or missile plume interference, the auto video track was designed to enter coast mode for 5 seconds while target reacquisition was attempted. While in coast mode, the FLIR gimbals continued to move the FLIR line of sight at a rate and direction consistent with that of the last valid track. If the target was not automatically reacquired during the five second coast period, the FLIR was designed to enter point mode. Point mode was designed to keep the FLIR line of sight directed at the same point on the earth's surface. During live fire missile test after loss of auto video track, the FLIR coast mode did not switch smoothly and predictably to point mode. At the end of the five second coast

period, the FLIR line of sight moved rapidly at a direction and rate inconsistent with the last valid track, ultimately resulting in the FLIR pointing up to 90° in azimuth from the last known target position. This occurred at random approximately 5-10 percent of the time when the coast mode was active. During LOAL autonomous Hellfire missile shots, missile exhaust induced auto video track loss may cause malfunction of the coast mode and unpredictable movement of the FLIR away from the target line of sight. The operator will be required to select a wider FLIR field of view, return the FLIR to the target line of sight, reacquire the target, reestablish auto video track, and then designate the target.

Several different methods of compensation for malfunction of the automatic video track coast mode were identified and tested during captive carriage flights. One method involved manually breaking the auto video track lock when the FLIR entered coast mode and then manually reacquiring auto video track lock. This method may be employed if the exhaust plume caused the auto video track to enter coast mode and did not reacquire the target within approximately 2-3 seconds. High workload was experienced during this technique since the missile was already enroute and time to accomplish the task was limited. Since the operator had already lifted the trigger guard to range the target prior to launch, the trigger guard was released, depressed once to break auto video track, and then depressed again to reacquire auto video track once the reticle was centered on the target. The trigger guard was then lifted and the laser trigger was depressed to the second detent for target designation. This technique required both hands, since rapid manipulation of the slew button was more accurate through the use of one's thumb and index finger (WL 8). In addition, the other hand was in place to immediately depress the trigger guard to

engage the auto video track. Another method of compensation was to break the auto video track lock and manually track the target. Manual track is described more fully in paragraph 3.7.4.

The high operator workload and excess time required during a critical phase of target engagement will increase the risk of an unsuccessful engagement by further limiting the period that the operator can maintain the laser designation spot on the target. Recommend improvement of the FLIR response to loss of auto video track by having the FLIR remain directed at the point of auto video track loss and enter point mode.

3.7.4. Excessive Sensitivity of the FLIR Line of Sight Gimbal Control

The FLIR was equipped with elevation and azimuth gimbal assemblies that allowed FLIR turret rotation. Operator control of these gimbals was accomplished through the slew button on the hand control unit. During flight tests, FLIR operators assessed the FLIR line of sight gimbal control (using point, slew, and rate modes) during manual target tracking. Accurate positioning of the FLIR reticle position on the target at Hellfire missile mission ranges was difficult. The hand control unit slew switch sensitivity did not allow for fine azimuth and elevation corrections. Attempts at small corrections often resulted in overshooting the intended FLIR line of sight direction, resulting in the requirement for additional corrective inputs. During this time, random aircraft motion and maneuvering combined to move the reticle off the target. Effective manual track of targets required two-handed hand control unit operation when slewing the FLIR. Manually maintaining the FLIR line of sight on a Hellfire target during an

autonomous Hellfire missile shot required numerous small and precise FLIR elevation and azimuth corrections until missile impact (WL 8). During Hellfire missile shots under marginal FLIR environmental conditions that prevent the use of the auto video track, the sensitive line of sight gimbal control will cause the operator to be unable to keep the reticle precisely on the target. Missing either the intended location of missile impact or the target altogether will result. A contributing factor to the excessive sensitivity was the maximum deflection of the slew button resulting in a 3 rad/sec turret rotational rate along either axis. The force required to reach this slew rate was 4 lb. The slew button response curve between the 0 to 4 LB limits was too sensitive at the low end to make the small angular adjustments required to manually track targets.

3.7.5. Absence of Missile Seeker Cone Constraint Information on Horizontal Situation Visual Display

The AHS missile seeker limit indication was evaluated during day and night autonomous and remote practice and live missile events. The AHS provided indication to the FLIR operator that missile seeker limits had been reached by posting a CONE constraint on the FLIR display. No visual Hellfire Missile cone constraint information was available on the horizontal situation visual display. The right seat pilot relied upon the FLIR operator for verbal indication of proper aircraft heading to ensure that no missile seeker limit had been reached. The FLIR operator was required to compare aircraft heading to actual FLIR azimuth, both of which were available on the FLIR display, and then verbalize the required direction of yaw for proper missile and target alignment to the

pilot (WL 6). During Hellfire Missile launches the limited missile seeker limit indication will require the operator to note a CONE constraint, interpret the proper direction of aircraft yaw, and verbalize this to the pilot. An overall higher operator workload and distracting voice calls immediately prior to a Hellfire Missile launch will result. The author recommends addition of a visual means of missile seeker condition to the horizontal situation visual display.

3.7.6. Overly Sensitive Attack Course Deviation Indicator

An attack course deviation indicator was provided on the horizontal situation visual display that provided visual indication of target bearing, range, and heading correction required to intercept a direct course to the target. The horizontal situation visual display attack course deviation indicator was evaluated during forward flight day and night autonomous and remote Hellfire missile events. The aircraft attack runs began at approximately 8.0 KM from the target. During multiple attack runs, the course deviation indicator needle was extremely sensitive to minor aircraft course deviations. The flying pilot was required to make numerous minor heading corrections to keep the course deviation indicator centered (WL 5). In addition, the pilot was also required to correct for cone constraints through aircraft yaw. During forward flight Hellfire Missile launches, the extreme sensitivity of the attack course deviation indicator will cause the pilot to make many small heading corrections to keep the course deviation indicator from reaching a fully deflected condition, resulting in distraction from FLIR operator verbal

cone constraint heading corrections.

3.7.7. Uncommanded FLIR Line of Sight Movement When Switching Between Tactical and FLIR Multi-Function Display Modes

The FLIR included a laser set designed for use with precision guided laser munitions such as the Hellfire missile. To enable the laser, the operator used the master arm and laser switches on the armament control panel. With the laser enabled and FLIR video selected on the multi-function display, a cooling fan was activated to keep the laser at the correct operating temperature. When the video selection on the multi-function display was changed from FLIR to tactical, the cooling fan deactivated. Once the FLIR video was selected again, the cooling fan was reactivated, causing uncommanded FLIR line of sight movement. The movement was characterized by a rapid "jump" of the FLIR line of sight that sometimes caused the FLIR reticle to come off the target and the auto video track to break lock. When switching from tactical to FLIR display, the operator had to recognize the loss of auto video track, move the FLIR line of sight back to the target, and then reengage auto video track (WL 5). During setup for a remote Hellfire missile shot, frequent switches between tactical and FLIR displays are required. The FLIR line of sight movement while switching multi-function display modes will cause the FLIR to break auto video track, resulting in frequent readjustment of the FLIR line of sight and auto video track reengagement of the target. Cause was electromagnetic interference of the FLIR line of sight control due to the laser cooling fan relay.

4. CONCLUSIONS

The Armed Helicopter Subsystem (AHS) provided improved Combat Search and Rescue (Combat SAR) and Anti-Surface Warfare (ASUW) capabilities and mission capability growth to the HH-60H. However, several major deficiencies combined to increase overall operator workload to unacceptable levels and must be corrected and verified prior to operational test and system deployment. Most importantly, the difficult auto video track at High Forward Looking Infrared (FLIR) look down angles increased operator workload and reduced the capability of the system in all mission areas.

- Mission Preflight and Initialization Deficiencies
  - Incorrect magnetic variation when initializing with a blank cartridge installed in the mission data loader.
- Automatic Video Tracker Deficiencies
  - Difficult FLIR auto video track acquisition during turns.
  - Auto video track loss when switching between narrow and medium field of view.
  - FLIR auto video track mode not optimized.
  - During conditions of low target and background temperature contrast, FLIR and auto video track performance was degraded. At ranges of 5 KM and greater auto video track may not be possible, or the missile exhaust could cause loss of auto video track subsequent to missile launch.

- Remote Hellfire Missile Launch Deficiencies
  - Remote Hellfire Missile mode was preferred to Autonomous mode.
  - The AHS remote capability was degraded by inaccurate FLIR passive range data, FLIR generated contacts, and the FLIR track function course and speed.
  - Reliance upon visual estimation, other radar equipped assets, mark on top of the target, or laser ranges will increase aircraft exposure risk and operator workload.
  - The excessive workload during setup of a remote Hellfire missile shot will limits its usefulness, particularly with moving remote designator, target, and launch aircraft.
- Autonomous Hellfire Missile Launch Deficiencies
  - AHS autonomous capability was reduced due to the FLIR lower gimbal limit, auto video track coast mode malfunction, and excessive sensitivity of the FLIR line of sight gimbal control.
  - Manual FLIR target track was difficult.
  - Absence of missile seeker cone constraint information on the horizontal situation visual display and overly sensitive attack course deviation indicator.
- FLIR Deficiencies
  - Excessive workload required during switch between tactical plot and FLIR display.
  - Inaccurate FLIR computed passive target range, position of passive FLIR contacts, and FLIR track function course and speed data.

- Uncommanded FLIR gimbal disable.
- Opposite function of the display control panel scale switches and FLIR scale switch.
- FLIR polarity toggle capability only when not in the main menu screen.
- Difficult FLIR manual gain/level adjustment.
- During Combat SAR missions, the most effective use of the FLIR was to point it below the horizon in either scan or offset forward modes to assist in identifying checkpoints, rising terrain, and obstacles.
- The FLIR was not effective for obstacle clearance during takeoffs and landings.
- The FLIR will enhance and complement Night Vision Devices (NVDs) during night ingress and egress.
- FLIR jitter during cuing.
- Improperly labeled and unlit FLIR/tactical display switch on the display control panel will distract the operator from navigation and external obstacle clearance tasks.
- Uncommanded FLIR line of sight movement when switching between tactical and FLIR multi-function display modes.

5. RECOMMENDATIONS

The single most important recommendation is to address the difficult auto video track at high Forward Looking Infrared (FLIR) look down angles. A possible solution may be to change the mounted position of the FLIR by inverting it and suspending it from the mounting platform.

- Operate the FLIR in either offset forward or scan mode during Combat Search and Rescue (Combat SAR) ingress and egress.
- Adapt the unused hand control unit right control switch for use as a toggle between tactical and FLIR displays.
- Launch autonomous Hellfire missiles from a hover.
- Remove the FLIR passive range and contact functions.
- Improve auto video track performance in low target and background temperature contrast environments and improve susceptibility to missile exhaust plume.
- Recommend improvement of the FLIR response to loss of auto video track by designing the FLIR to remain directed at the point of auto video track loss and enter point mode.
- Incorporate an overlay function so that the tactical plot could overlay the FLIR display, reducing operator workload.
- Add a visual means of missile seeker condition to the horizontal situation visual display.

- Incorporate a multifunction display and a hand control unit in the cabin for use by the aircrewman.

BIBLIOGRAPHY

BIBLIOGRAPHY

Dee, James M. 1991. AH-64 Apache Helicopter's Performance in the Gulf War. Tullahoma, TN: University of Tennessee Space Institute.

Gordon, Vernon; Landman, Michael; Lenahan, Timothy; and Masters, George. 1996. USNTPS Flight Test Manual 109 Systems Testing. Patuxent River, MD: U.S. Naval Test Pilot School.

Masters, George. 1993. Airborne Systems Course Textbook Integrated Weapon System Test and Evaluation. Patuxent River, MD: U.S. Naval Test Pilot School.

Masters, George. 1994. Airborne Systems Course Textbook Electro-Optical Systems Test and Evaluation. Patuxent River, MD: U.S. Naval Test Pilot School.

Moore, Mike, and Ransford. 1997. HH-60H DT-IIIH Integration of the Armed Helicopter Subsystem. Patuxent River, MD: Naval Air Warfare Center Aircraft Division.

Norman, Cynthia L.A. 1987. Software Management for Weapon System Programs. Wright-Patterson Air Force Base, OH: Air Force Institute of Technology.

Shibe, Robert B. 1996. Software Integration Testing of U.S. Navy Airborne Electronic Warfare Systems. Knoxville, TN: University of Tennessee.

Olson, Greg. 1991. Capstone Project An Upgrade to the FB-111 Aircraft Weapon System. Tullahoma, TN: University of Tennessee Space Institute.

Oefelein, William A. 1998. Ordnance Separation Flight Test Matrix Reduction. Knoxville, TN: University of Tennessee.

Strahl, Gerald A. 1990. Physical Simulation Testing of Armament Systems. Picatinny Arsenal, NJ: U.S. Army Armament Research, Development and Engineering Center.

_____. 1995. Air Force Manual 99-104. Armament/Munitions Test Process—Direction and Methodology for Testing. Kirkland Air Force Base, NM: Air Force Test and Evaluation Center.

_____. 1985. Software Test and Evaluation Manual, Vol. 1 Guidelines for the Treatment of Software in Test and Evaluation Master Plans. Atlanta, GA: Georgia Inst. of Technology Atlanta School of Information and Computer Science.

_____. 1987. Software Test and Evaluation Manual, Vol. 2 Guidelines for Software Test and Evaluation in the Department of Defense. Atlanta, GA: Georgia Inst. Of Technology Atlanta School of Information and Computer Science.

_____. 1984. Helicopter Guidance and Control Systems for Battlefield Support Held at Monterey, California on 8-11 May 1984. Neuilly-Sur-Seine (France): Advisory Group for Aerospace Research and Development.

_____. 1996. Student Outline, Hellfire Point Target Weapon System. Fort Rucker, Alabama: Aviation Training Brigade, United States Army Aviation Center.

LIST OF REFERENCES

LIST OF REFERENCES

1) Naval Air Systems Command, H-60F/H NATOPS Flight Manual, Naval Air Systems Command A1-H60CA-NFM-000, 15 May 1995 with Change 1 of March 1997.

2) Draft FLIR/Hellfire System Technical Directive, H-60 Airframe Change No. 132.

3) HH-60H Detail Specification, SD-567-6-2, 1993.

4) Test and Evaluation Master Plan No. 1129 Rev B for Combat Search and Rescue/Special Warfare Support Helicopter (HH-60H) Program, 1996.

5) System/Segment Specification for Armed Helo Subsystem on the H-60 Aircraft (SH-60B Block I and HH-60H), Rev C, 1997.

6) MIL-STD-1472D Human Engineering Design Criteria for Military Systems, Equipment and Facilities, 1981.

7) Software Requirements Specification for the Stores Management Unit for the Hellfire Weapons Subsystem on the SH-60B Block I and HH-60H Aircraft 1997.

8) Software Requirements Specification for the Infrared Laser Detecting-Ranging-Tracking Set for the Hellfire Weapons Subsystem on the SH-60B Block I and HH-60H Aircraft 1997.

9) SH-60F/HH-60H Computer Program Performance Specification for the Tactical Data Processor AHS Release 18.2, 1997.

10) Ransford, Kevin and Moore, Mike. "HH-60H DT-IIIH Integration of the Armed Helo Subsystem", Naval Air Warfare Center Aircraft Division, Naval Air Station Patuxent River, MD, 1997.

11) Roscoe, Alan H., "In-Flight Assessment of Workload Using Pilot Ratings and Heart Rate", NASA Technical Reports, 01 June 1987.

12) Standard Operating Procedures for the Test and Evaluation of Outdoor Ground and Flight Class IIIb and IV Lasers, 1995.

13) Fiedler, Heidi M., "Proceedings of the DOD Workload Assessment Workshop on Workload Assessment Techniques and Tools held in Dayton, Ohio on 27-28 September 1986", NASA Technical Reports, 15 September 1987.

14) Wierwille, W. W., Williges, R. C., and Schiflett, S. G., "Aircrew Workload Assessment Techniques", NASA Technical Reports, 01 August 1979.

15) NASA TN D-5153, "The Use Of Pilot Ratings in the Evaluation of Aircraft Handling Qualities (HQR Scale)", NASA Technical Reports.

16) Braby, Carole D., "Cardiovascular and Subjective Measures of Task Demand in A Low Workload Monitoring Task", NASA Technical Reports, 01 September 1987.

17) Aviation Training Brigade, United States Army Aviation Center, Student Outline, Hellfire Point Target Weapon System, Fort Rucker, Alabama, 1996.

APPENDICES

APPENDIX A

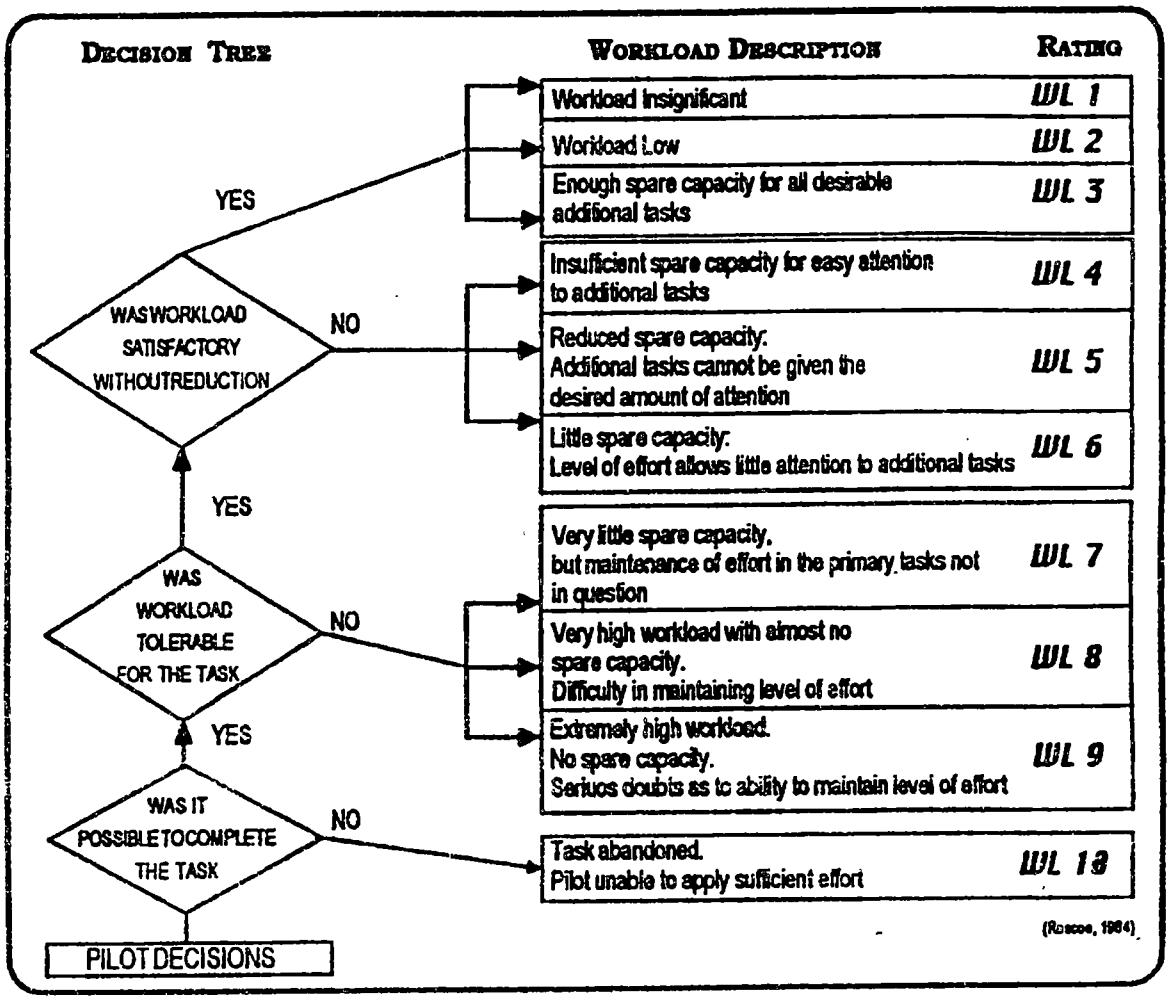

Bedford Workload Scale

APPENDIX B

WEAPON SYSTEM DESCRIPTION

1. GENERAL

The HH-60H Armed Helicopter Subsystem (AHS) consisted of the following components:

(1) AN/AAS-44 Forward Looking Infrared (FLIR) with laser set installed on the nose-mounted diving board.

(2) Mission pallet mounted to the aircraft deck behind the pilot's seat. The pallet housed the Electronics Unit, Video Cassette Recorder (VCR), and power supply switches for the FLIR and Armament Controller Receiver Transmitter.

(3) Hand control unit installed adjacent to the copilot's control display unit.

(4) Electronic Unit.

(5) Boresight Module for ground use only that attached to the nosemount.

(6) Off the Shelf VCR unit Panasonic AG-1070DC

(7) Armament controller-receiver-transmitter located in the transition section right-hand side.

(8) Power converter unit located in the transition section left-hand side.

(9) Left hand extended pylon.

(10) M299 Hellfire launcher mounted on the left hand extended pylon.

(11) Maintenance switch panel located in the upper port side avionics equipment compartment.

(12) Mission disconnect panel located aft and below the center console.

(13) Modifications to the caution/advisory panel, Armament Control Panel, and software for the tactical data processor, communication system controller, and horizontal situation visual display.

The FLIR had five fields of view. Three fields of view were optical (wide, medium, and narrow) with two digital zoom (2x and 4x) enhancements of the narrow field of view image. The FLIR had 24x magnification in narrow field of view. The laser set designed use included designation for Hellfire missiles and other laser guided munitions. The M299 launcher was an updated version of the M272 launcher used on current U.S. Army and U.S. Marine Corps aircraft. The launcher had a MIL-STD-1760 Interface. The M299 was capable of carrying and launching from one to four Hellfire missiles. The M299 was attached to the aircraft using a BRU-14/A bomb rack-equipped left hand extended pylon. The M299 could be jettisoned by select or emergency jettison with or without missiles. The launcher was not capable of independent missile jettison. A more complete description of AHS hardware components is contained in reference (2).

2. AN/AAS 44 FLIR

The FLIR turret used a two-axis gimbal that contained all FLIR optics, the focal plane array, integrated laser detecting-ranging tracking set, local area processing, and servos. The focal plane array was a second generation, 8 to 12 micron array containing 240X4 elements in time delay integration designed to provide greater sensitivity and longer observation ranges. The FLIR incorporated three optical fields of view (1.3, 6.0, and 23.8) along with two digital levels of magnification (47.6X and 95.2X). The turret

processor used electronic image stabilization designed to maintain image quality in the helicopter vibration environment. The 12-bit digital video processor used a local area processor algorithm designed to optimize gain/level throughout the scene with hands-off operation. The laser set was designed to provide enhanced targeting/guidance capability for standoff munitions (Hellfire Missile) and range finding. The laser set was a neodynium YAG (Nd:YAG) 1.06 micron flashlamp pumped laser (non-eyesafe Class IV Military Exempt). The laser set optics contained an image motion compensation mirror designed to maintain FLIR/laser line-of-sight accuracy. The turret weighed approximately 114 lbs and was mounted to the nose of the aircraft. The handling tool was designed to enable four persons to lift the turret from the shipping/storage container to the nosemount. Following turret installation, the handling tool was removed for flight. The FLIR turret is shown in figure D-11.

3. AGM-114 HELLFIRE MISSILE

3.1. General

The Air to Ground Missile (AGM)-114 Hellfire missile was a laser guided missile designed for use against hard point targets. Hellfire was designed for employment in air-to-air roles against other helicopters; surface-to-surface against armor and ships, and air-to-surface against tanks, armored vehicles, ships and bunkers. The missile guidance system used the laser energy reflected from the laser-designated target to generate error signals and in turn steering commands to the missile fins to provide for a constant

navigation solution update. Hellfire used a shaped charge warhead to defeat individual hard point targets with minimal exposure of the delivery vehicle to hostile fire. A more complete description of the Hellfire Missile is contained in reference (17). Five models of the Hellfire tactical AGM existed, and all were equipped with semi-active laser seekers. These models were:

3.2. AGM-114A

The AGM-114A did not contain a safe and arm device and was therefore not approved for U.S. Navy Shipboard use and will not be discussed.

3.3. AGM-114B

This missile was the same as the AGM-114C except it contained a safe and arm device that provided electrical and mechanical blockage in the rocket motor firing train, making it approved for US Navy shipboard use. The AGM-114B missile was used for all developmental test and evaluation live missile firings.

3.4. AGM-114C

This missile had an improved low visibility capability and was designed to fly lower trajectories than the AGM-114A. A minimum smoke rocket motor was a design feature that provided for less smoke than the AGM-114A. The missile was 64 inches long, 7 inches in diameter, and weighed 100 pounds.

3.5. AGM-114F

This missile was the same as the AGM-114C but featured dual warheads that were designed for improved performance against reactive armor. The missile was 71 inches long, 7 inches in diameter, and weighed 107 pounds.

3.6. AGM-114K

This missile was the newest of the Hellfire missile family and featured dual warheads, electro-optical countermeasures immunity, and an externally programmable guidance section for trajectory shaping/seeker logic changes. The missile dimensions were the same as the AGM-114C.

3.7. Tactical missile AGM-114

The tactical missile contained a shaped charge warhead that was designed to defeat any tank known to exist in the field. After launch, when acceleration exceeded 10 g's, the missile was armed somewhere between 150 and 300 meters in front of the aircraft. Maximum designed velocity of the missile was 475 m/sec (Mach 1.4). The tactical missile contained the following major sections:

3.7.1. Laser seeker. Designed to convert reflected laser energy from the target into electronic guidance signals.

3.7.2. Warheads:

3.7.2.1. (AGM-114C) Possessed a single shape charge designed to provide the explosive and piercing force necessary to destroy the target.

3.7.2.2. (AGM-114F and AGM-114K) Used the same shape charge warhead but contained an additional small warhead forward of the main warhead designed to provide enhanced performance against reactive armors.

3.7.3. Guidance section. The guidance section included the missile battery, autopilot, pneumatic accumulator, and displacement gyros. Designed to compute steering command data.

3.7.4. Propulsion section (missile motor). This section contained a single stage, single thrust, star shaped solid propellant motor designed to propel the missile using a burn time of approximately 2 to 3 seconds.

3.7.5. Control section. Contained a pneumatic actuation system, located aft of the rocket motor, that was designed to convert steering commands into mechanical fin movement.

3.8. M34 Dummy missile (DATUM)

The dummy missile had a primary purpose of training armament personnel in uploading and downloading. A secondary purpose was to simulate a prescribed load of missiles for a specific training flight. Internally, it contained no explosives or electronics, but had ballast to simulate the weight and center of gravity of the AGM-114C. External shape and length dimensions were the same as the AGM-114C.V

3.9. M36 Training Missile (CATUM)

The training missile was used primarily for captive flight training and therefore not launched. External shape and length dimensions were the same as the AGM-114C.

The missile had an operational laser seeker that was designed to search for and lock on to laser designated targets. It was handled as a live tactical missile and showed up on the aircraft inventory. A tactical missile could not be launched if a training missile was present on any launcher station. Tactical missiles could not be selected and powered if training missiles were present, except during use of the built in test feature.

3.10. Hellfire Terms

The AHS was designed to operate in several different modes. These modes were chosen based on technical considerations to ensure proper operation of all modes. When selecting a launch mode, cloud ceiling, designation delay times, and terrain features were all considered.

3.10.1. Autonomous Designation. The launching aircraft designated its own target, providing guidance for the missile. This method of designation was designed for use in the Lock on After Launch (LOAL) mode. Due to the possibility of laser back-scatter, Lock on Before Launch (LOBL) mode was not recommended during autonomous designation.

3.10.2. Remote Designation. The target was designated either by another aircraft or by a remote ground-based designator. This designation technique was designed for use either in LOBL or LOAL modes. Remote designation mode was designed to allow the launching aircraft to fire from a masked position with greater standoff than was possible with autonomous designation. During remote designation, the remote designator should not be within a ±30° cone from the missile seeker line to target line, figure D-9.

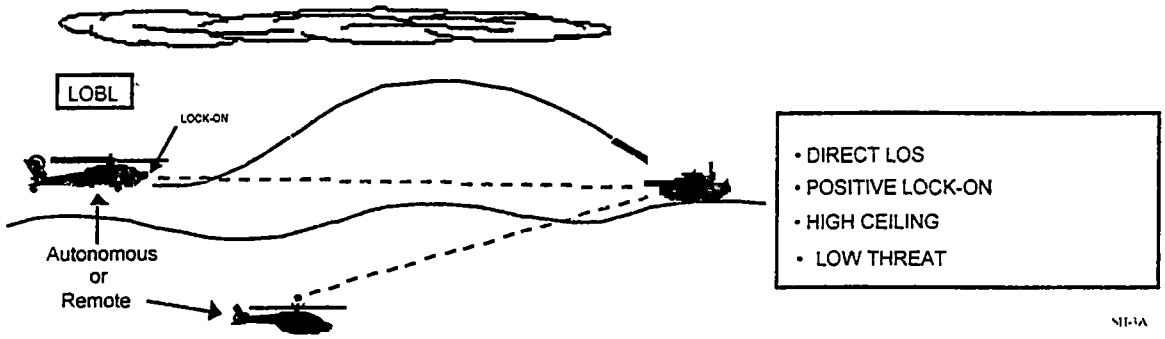

Figure 1
Lock-On Before Launch (LOBL)

3.11. Lock-On Before Launch (LOBL).

LOBL mode (figure B-1) was designed for use when the target was within the missile line of sight prior to launch in remote designation mode. In this mode, the missile laser seeker acquired and locked-on to the reflected laser energy from the target prior to launch. The LOBL mode was designed for use when the following conditions were present:

3.11.1. Direct line of sight to target existed.

3.11.2. The visibility conditions allowed seeker lock-on at the launch range.

3.11.3. The cloud ceiling was higher than the LOBL maximum trajectory altitude for the required range.

3.11.4. The threat to the launch platform did not warrant the use of delay designation or launch from a defilade position, ref (17).

3.12. Lock-On after Launch (LOAL).

The LOAL modes were designed to allow the missile to be launched without a seeker lock-on. Some advantages and uses of LOAL mode are described below.

3.12.1. The seeker scanned and located the reflected laser energy after launch. This capability allowed target designation to be delayed until the missile was closer to the target, or for operations in low visibility conditions that shortened the seeker's lock-on range.

3.12.2. Allowed the missile to be launched from an aircraft hidden from the target by a terrain mask.

3.12.3. For either remote or autonomous modes, if LOAL-DIR, LO, or HI was selected and properly coded laser energy was received prior to launch, then the AGM-114C/F missile was designed to default to LOBL and the LOAL constraint box changed to a LOBL box. The AGM-114K was designed to default to LOBL only from the LOAL-DIR, autonomous mode. If the LOAL-DIR, LO, or HI remote mode was selected then the AGM-114K would not default to LOBL. Lock out of the laser energy was designed prior to launch and until approximately 1.5 seconds after launch.

3.12.4. Three LOAL modes existed that differed in the trajectory shape and seeker scan pattern; LOAL-Direct (LOAL-DIR), LOAL-Low (LOAL-LO), and LOAL-High (LOAL-HI).

3.12.4.1. LOAL-DIR. The LOAL-DIR mode (figure B-2) was designed to provide the lowest missile trajectory when any of the following conditions existed:

3.12.4.1.1. Direct line of sight to target existed.

3.12.4.1.2. Bad weather (low cloud ceilings and/or visibility).

3.12.4.1.3. When the available threat data indicated the target possessed laser detectors.

3.12.4.1.4. Back-scattered laser energy prevented the seeker from locking on to the proper target before launch in the LOBL autonomous mode, ref (17).

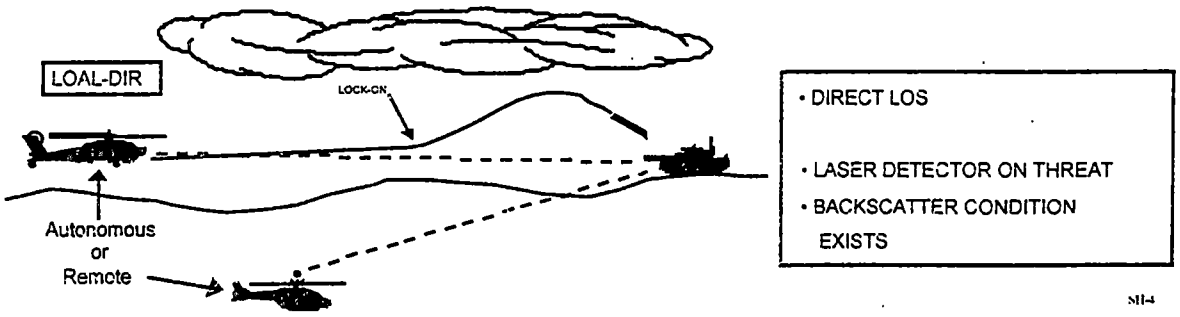

Figure 2
LOAL-DIR Mode

3.12.4.2. LOAL-LO. The LOAL-LO mode (figure B-3) was designed for use when the missile was required to clear a low mask that may have been selected by the crew for aircraft protection.

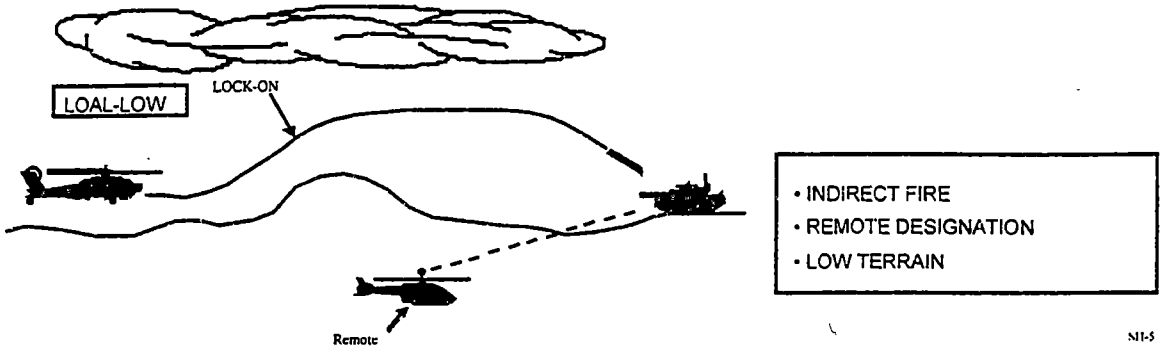

Figure 3
LOAL-LO Mode

3.12.4.3. LOAL-HI. The LOAL-HI mode (figure B-4) was designed for use when the missile was required to clear a high mask that may have been selected by the crew for aircraft protection, ref (17).

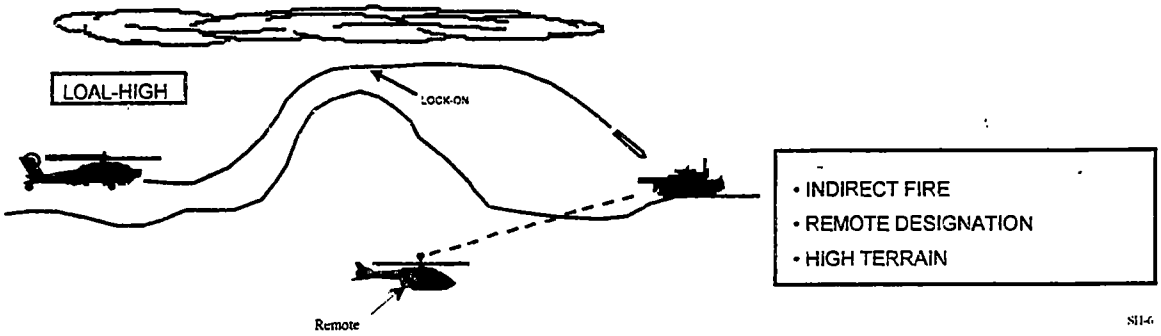

Figure 4
LOAL-HI Mode

3.13. Laser seeker functions and operational characteristics. The laser code determined the laser pulse frequency. Prior to launch, the missile was programmed to receive a

specific code. If the designator's code and the code programmed into the missile were not the same, the missile did not acquire or track the target.

3.13.1. The seeker was designed to detect properly coded laser energy and provide line-of-sight information to the RHE while on the rail and to the missile autopilot after launch.

3.13.2. The seeker detector (figure B-5) was gimbal-mounted and gyro-stabilized with a mass composed of the mirror, balance wheel, and a permanent magnet rotor, spinning at 4,200 RPM. The detector, that did not rotate, had a ±30 degree gimbal limit from missile centerline, ref (17).

SEEKER

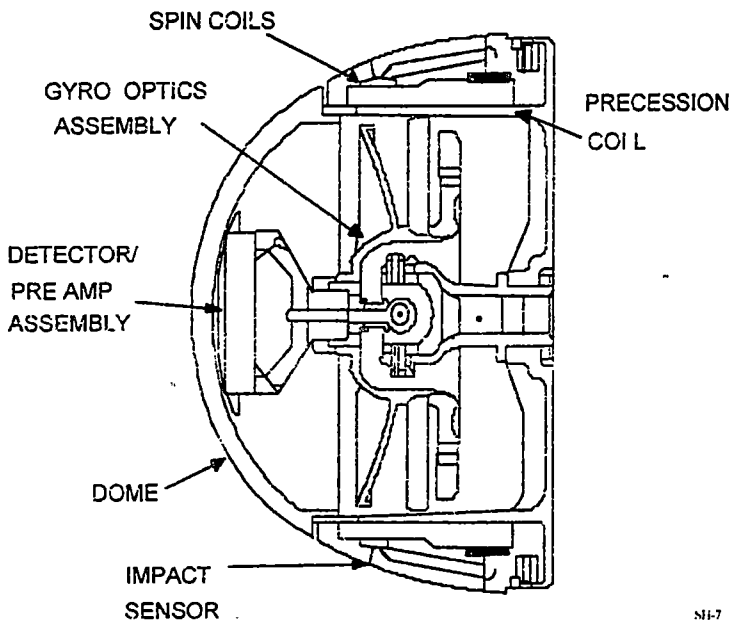

Figure 5
SEEKER MAJOR COMPONENTS

3.13.3. The operational modes of the seeker included:

3.13.3.1. Scan. The seeker moved in a predetermined scan pattern (box scan) to help it acquire and lock on to a laser spot. This mode was employed prior to launch for LOBL remote mode and after launch for LOAL mode.

3.13.3.2. Stare. The seeker was commanded to look straight ahead along the missile body axis. All missiles with the exception of the AGM-114K could acquire and lock on if laser energy was detected. This mode was employed prior to launch for LOAL-DIR, LO, or HI remote modes.

3.13.3.3. Slave. The seeker was commanded to follow external line of sight commands. It could acquire and lock on if laser energy was detected. This mode was employed prior to launch for all autonomous modes.

3.13.3.4. Track. The seeker was commanded by the seeker electronics assembly to maintain the reflected laser energy centered on the detector/preamplifier assembly so that the optics assembly was pointed at the target. The missile reaction to loss of designation (loss of pulse correlation) depended on whether the missile was captive or launched and the model of missile after launch.

3.13.4. Captive Missile. For all missiles, the seeker reverted to its selected pre-designation mode if loss of pulse correlation occurred before launch.

3.13.5. After Launch. For all missiles, the seeker gimbal became inertially stable upon loss of pulse correlation. The seeker gimbal continued to point to the same pitch and yaw angle relative to horizontal.

3.14. The AGM-114C/F model missiles continued to receive G-bias climb commands, along with any guidance commands present when loss of pulse correlation occurred. With its G-bias climb and guidance commands continuously applied, the resulting climb trajectory eventually caused the seeker gimbal to be limited by its lower mechanical stop.

3.15. These events made reacquisition unlikely when designation resumed.

3.16. The AGM-114K model missile was commanded to fly toward the last target line-of-sight when loss of pulse correlation occurred, maximizing its chance for reacquisition.

4. ARMAMENT CONTROLLER RECEIVER TRANSMITTER

The armament controller-receiver-transmitter augmented the current armament system controller and was the stores management bus controller for the FLIR/laser set and M-299 missile launcher. The stores management software system was resident in armament controller-receiver-transmitter non-volatile memory and all armament controller-receiver-transmitter interfaces were programmable through it. The armament controller-receiver-transmitter also communicated with the tactical data processor through a redundant MIL-STD-1553B interface. Navigation data and FLIR inputs were received from the 1553 bus. The armament controller-receiver-transmitter then supplied the target navigation data to the tactical data processor. The armament controller-receiver-transmitter also controlled and provided the status of the power converter unit

that supplied MIL-STD-170 class II power to the M299 launcher and stores. The armament controller-receiver-transmitter controlled the operator selectable missile firing sequence. The default firing sequence was as follows: lower outboard, lower inboard, upper outboard, and upper inboard. Internally, the armament controller-receiver-transmitter was configured with seven plug-in circuit card modules (used for launcher interlock), special purpose interface card (release consent circuitry), a power supply module, and a video graphics module (not used). The armament controller-receiver-transmitter weighed approximately 17 lbs.

5. M299 LAUNCHER

The mechanical structure of the M299 Hellfire launcher, figure D-8, provided a stable platform capable of carrying and launching from one to four Hellfire missiles. The M299 was an updated version of the M272 launcher used on current U.S. Army and U.S. Marine Corps aircraft. Unlike the M272, the M299 contained numerous electronics onboard the launcher and had an updated MIL-STD-1760 interface, while increasing launcher weight by only 3 lb. The M299 launcher had overall dimensions with four missiles loaded of 64 in. long, 22 in. wide, 29 in. tall, and a weight of 543 lb. The M299 launcher was attached to the aircraft using a BRU-14/A bomb rack-equipped left hand extended pylon. The M299 launcher was suspended from two hooks (14 in suspension) on the bomb rack that engaged two suspension lugs on the top of the launcher hardback. Sway braces at the weapon station were adjusted against the launcher hardback to prevent lateral movement of the launcher. The bomb rack jettison capability could be activated

by the aircrew to selectively (one store station only) or emergency (all store stations) jettison the launcher (with or without missiles). The MIL-STD-1760 electrical connector of the pylon cable was secured to the pylon by a lanyard that held the connector when the launcher was jettisoned. The launcher was not capable of independent missile jettison. Any mix of missiles may be loaded.

5.1. The launcher provided the wiring harnesses and electronic command signal programmer, necessary electrical/electronic switching, transfer, and control functions associated with missile prelaunch, missile sequencing, and launch commands.

5.2. The M299 had a built in test equipment routine that provided launcher status to the aircraft when a built in test was commanded by the fault detection/location systems or upon CPG initiation. The major components of the launcher were as follows:

5.2.1. Hardback assembly. Provided attaching points (lugs) for mounting the launcher to the pylon rack.

5.2.2. Launch rails. Provided mounting and holdback provisions for the missiles. When missile thrust exceeded approximately 600 pounds the holdback was designed to be overridden, allowing the missile to leave the rail.

5.2.3. SAFE/ARM switch. The SAFE/ARM switch located on the front of the launcher provided a mechanically switched interrupt in the arm power going to the launcher electronics, and the 4 related missile control circuits.

5.2.3.1. The switch can be moved from SAFE to ARM or from ARM to SAFE manually or was actuated from SAFE to ARM when the missile system was ON and the MASTER ARM switch in the cockpit was moved to ARM.

5.2.3.2. Once moved to ARM, the SAFE/ARM switch on the launcher remained in the ARM position until manually moved to SAFE.

5.2.3.3. In addition to providing ARM POWER to the individual rail circuit in the launcher when it was in the ARM position, it provided the launcher status to the armament controller-receiver-transmitter.

6. SOFTWARE MODIFICATIONS

The AHS system components that used software were the armament controller-receiver-transmitter, M299, and the FLIR. FLIR and armament controller-receiver-transmitter software had to be modified several times during developmental testing. FLIR software versions used were 03.00c, 7.01c, 7.04, 7.05, 7.06, 7.08 and 7.09. Armament controller-receiver-transmitter software versions used were 11.01, 11.02, 11.05, and 11.06. The AHS integration also required modifications to tactical data processor and horizontal situation visual display software that were an integrated part of the existing aircraft avionics. Initially, tactical data processor software version 18.2 of 11/6/97 was used. During testing, the tactical data processor software was corrected to version 18.2 of 2/26/98 due to identified deficiencies.

APPENDIX C

Table 1
LIVEFIRE TEST AND TEST CONDITIONS

Test #/ Objective	Test Range	Target Size/ Speed/ Range	Missile Launch Mode & Designation	Launch Airspeed (KIAS)/ Altitude (FT AGL)	Remarks
1 LOBL	Eglin C-7	M-60 Hulk/ 0 KTS/ 5.0 KM	LOBL Remote	0/ 200	1. AGM-114B missile. **(Live Warhead)** 2. Tripod mounted seeker target verified reflected laser energy. 3. Silicon Vidicon camera verified laser spot on target. 4. Time space positioning information data for aircraft and missile. 5. High speed video of target showed missile impact.
2 LOAL-H Max Range	Eglin C-7	M-60 Hulk/ 0 KTS/ 6.0 KM	LOAL-H Autonomous	80/ 150	1. AGM-114B missile. **(Live Warhead)** 2. Autonomous designation. 3. Tripod mounted seeker target verified reflected laser energy. 4. Silicon Vidicon camera verified laser spot on target. 5. Time space positioning information data for aircraft and missile. 6. High speed video of target showed missile impact.
3 NVD Shot	Eglin C-7	M-60 Hulk/ 0 KTS/ 5.2 KM	LOAL-L Autonomous	80/ 150	1. AGM-114B missile. **(Live Warhead)** 2. Tripod mounted seeker target verified reflected laser energy. 3. Silicon Vidicon camera verified laser spot on target. 4. Time space positioning information data for aircraft, missile, and target. 5. Night/NVD.
4 Min Offset Angle Shot	W108/ 386	56 ft QST/ 5 KTS/ 5 KM	LOBL Remote	80/ 100	1. AGM-114B missiles. **(Inert)** 2. Silicon Vidicon camera verified laser spot on targets. 3. Remote designator offset 10° from firing line. 4. Time space positioning information data for aircraft and missiles.
5 Near Max Offset Angle Shot	W108/ 386	56 foot QST/ 5.0	LOBL Remote	80/ 100	1. AGM-114B missile. **(Inert)** 2. Remote Designator 50° offset. 3. Silicon Vidicon camera verified laser spot on target. 4. Time space positioning information data for aircraft, missile, and target.
6 NVD Shot	W108/ 386	56 foot QST/ 5.0	LOAL-H Autonomous	80/ 300	1. AGM-114B missile. **(Inert)** 2. Silicon Vidicon camera to verified laser spot on target. 3. NVD Shot.

Table 2
JITTER VS VELOCITY/LOOK ANGLE

Event	Airspeed (KIAS)	Altitude (ft)	Event Ground Start Range (ft)	Slant Range (ft)	Approximate Ground End Range (ft)	FLIR to AC Bearing	FLIR Line of Sight Depression Angle Start
1	60	2000	23000	23130	21895	0	5
2			11500	11680	10485		10
3			7500	7765	6485		15
4			5500	5855	4485		20
5	80	2000	23000	23130	21650	0	5
6			11500	11680	10150		10
7			7500	7765	6150		15
8			5500	5855	4150		20
9	100	2000	23000	23130	21310	0	5
10			11500	11680	9810		10
11			7500	7765	5810		15
12			5500	5855	3810		20
13	120	2000	23000	23130	20970	0	5
14			11500	11680	9470		10
15			7500	7765	5470		15
16			5470	5825	3440		20

Table 3
AUTOMATIC VIDEO TRACKER TEST POINTS

Test Point	Target Aspect (deg Relative)	Altitude (Ft.) (AGL)	Air Speed (KIAS)	Approx. Initial Slant Range (Ft/KM)
1	0/180	50/200/1000	70-80	62,336/19
2	90/270	50/200/1000	70-80	62,336/19
3	0/180	50/200/1000	100-120	62,336/19
4	90/270	50/200/1000	100-120	62,336/19
5	0/180	50/200/1000	70-80	124,672/38
6	90/270	50/200/1000	70-80	124,672/38
7	0/180	50/200/1000	100-120	124,672/38
8	90/270	50/200/1000	100-120	124,672/38

Table 4
FLIR RESOLUTION

Test	Airspeed (KIAS)	Altitude (Feet AGL)	ΔT (°F)	Target	Polarity	Field Of View
Resolution vs. Airspeed	60 80 100 120 140	2500	8	EOTT[1] 3 ft	BH	N
Resolution vs. ΔT	60	2500	8 6 4 2 1 .5	EOTT 3 ft	BH	N
	60	1500	8 6 4 2 1 .5	EOTT 3 ft	BH	M
	60	1500	8 6 4 2 1 .5	EOTT 3 ft	BH	W
	60	2500	2 1 .8 .6 .4 .2	IMIST[2] 2 X 14 Pixel Bars	BH	N
	60	1500	2 1 .8 .6 .4 .2	IMIST 2 X 14 Pixel Bars	BH	M
	60	1500	2 1 .8 .6 .4 .2	IMIST 2 X 14 Pixel Bars	BH	W

- EOTT-Electroptical Thermal Target
- IMIST-Improved Mobile Infrared System Target

Table 5
BORE SIGHT TEST POINTS

Test Point	Altitude (ft AGL)	Ground Range (ft)	Slant Range (ft)	FLIR to Aircraft Bearing (deg)	Airspeed (KIAS)	FLIR Line of Sight Depression Angle (deg)
1	1000	11430	11474	0	0-10	5
2				45		
3				90		
4				120		
5				-45		
6				-90		
7				-130		
8	6000	34027	34553	0	60	10
9				90		
10				-90		
11	3200	18148	18428	0	0-10	10
12				45		
13				90		
14				120		
15				-45		
16				-90		
17				-130		
18	2100	7837	8114	0	0-10	15
19				45		
20				90		
21				120		
22				-45		
23				-90		
24				-130		
25	1000	2748	2924	0	0-10	20
26				120		
27				-130		

Table 6
CONSTRAINTS/INHIBITS VERIFICATION (1 of 2)

EVENT	AIRCRAFT SPEED/ALT (FT AGL)	TARGET RANGE (KM)	REMARKS
1	0/150-10	4-8	- LOW ALT inhibits verified at following points: Target Range / Radar Altitude (ft) / Missile Type 4 KM 31.4 to 22 AGM-114B 5 KM 31.4 to 22 AGM-114B 6 KM 68.5 to 41.6 AGM-114B 7 KM 105.7 to 73.6 AGM-114B 8 KM 142 to 105.5 AGM-114B Target Range / Radar Altitude (ft) / Missile Type 4 KM 31.4 to 22 AGM-114K 5 KM 31 4 to 22 AGM-114K 6 KM 31.4 to 22 AGM-114K 7 KM 31.4 to 22 AGM-114K 8 KM 31.4 to 22 AGM-114K
2	0/500	8.1-7.9	LOAL-L & LOAL-H modes used. Range constraint verified at 8 KM.
3	0/500	7.1-6.9	LOBL & LOAL-D modes used. Range constraint verified at 4.5 KM.
4	0/500	4.6-4.4	AGM-114B in LOAL-H mode. Range constraint verified at 3.5 KM.
5	0/500	3.6-3.4	AGM-114K in LOAL-H mode. Range constraint verified at 3.5 KM.
6	0/500	3.1-2.9	AGM-114B in LOAL-L mode. Range constraint verified at 3.0 KM.
7	0/500	2.6-2.4	AGM-114K in LOAL-L mode. Range constraint verified at 2.5 KM.
8	0/500	2.1-1.9	AGM-114B in LOAL-D mode. Range constraint verified at 2.0 KM.
9	0/500	1.8-1.6	AGM-114K in LOAL-D mode. Range constraint verified at 1.7 KM.
10	0/500	800-600	AGM-114K in LOBL mode. Range constraint verified at 0.7 KM.
11	80/1000	7.0-2.0	AGM-114B/K in LOBL mode. 20° roll constraint verified at 20° bank angle.
12	80/1000	2.0-1.0	AGM-114B/K in LOBL mode. 10° roll constraint verified at 10° bank angle.

Table 7
CONSTRAINTS/INHIBITS VERIFICATION (2 of 2)

EVENT	AIRCRAFT SPEED/ALT (FT AGL)	TARGET RANGE (KM)	REMARKS
13	80/1000	7.0-2.0	AGM-114B/K in LOAL mode. 10° roll constraint verified at 10° bank angle.
14	80/1000	7.0-2.0	AGM-114B/K in LOAL mode. 10° roll constraint verified at 10°/s yaw.
15	80/1000	8.0-1.0	14° pitch up and 8° pitch down constraints verified.
16	0/1000	7.5	AGM-114B in LOAL-L mode. 2500 ft cloud ceiling constraint verified.
17	0/800-600	7.5	AGM-114K in LOAL-L mode. 1500 ft cloud ceiling constraint verified.
18	0/1200-900	7.5	AGM-114B in LOAL-H mode. 2500 ft cloud ceiling constraint verified.
19	0/1000-800	7.5	AGM-114K in LOAL-H mode. 2500 ft cloud ceiling constraint verified.
20	0/1100-800	6.5	AGM-114B in LOAL-D mode. 1500 ft cloud ceiling constraint verified.
21	0/1000-800	6.5	AGM-114K in LOAL-D mode. 1500 ft cloud ceiling constraint verified.
22	0/700-500	6.5	AGM-114B in LOBL mode. 2500 ft cloud ceiling constraint verified.
23	0/800-600	6.5	AGM-114K in LOBL mode. 1500 ft cloud ceiling constraint verified.
24	100/50-150	2-8	Time of flight noted during simulated launch in LOAL-H, LOAL-L, LOAL-D, and LOBL modes.

Table 8
FLIR HAND CONTROL UNIT ATTACK MODE FUNCTIONS (pg. 1 of 2)

FLIR Operation in Navigation Mode		
Function	**Control Operation**	**Selection Choices**
Toggle Display Freeze	Right Control Switch Left	Switches from live FLIR video to frozen video
Polarity	Right Control Switch Right	White Hot Black Hot
FLIR Main Menu	Right Control Switch Depress	Selects FLIR main menu from FLIR operational mode
Line of Sight Modes	Highlight choice with right control switch left/right or up/down and right control switch depress to select mode once highlighted	Standby scan (different scan patterns boresight)
Gain/level settings	Same as Line of Sight modes	Local area processor Linear Rayleigh Manual
Grayscale	Same as Line of Sight Modes	On Off
Return to scan	Left Hand Controller Knob Left Control Switch Depress	Return to previously selected scan mode from current FLIR mode
Field of view	Left Hand Controller Knob Narrower Left Control Switch Up Wider Left Control Switch Down	Wide Medium Narrow 2x zoom 4x zoom
Focus	Left Hand Controller Knob Farther Left Control Switch Left Nearer Left Control Switch Right	Nearer (Infinity-Near) Farther (Near-Infinity)
Release Consent	Release Consent	No Action
Auto Video Track inputs and Breaklock Acquire then track	Trigger Guard	
Laser	Laser Trigger	First Detent-rangefind Second Detent-designate
Return	Return Button	Return to point mode, Return to track from offset track, change to slew from point

Table 9
FLIR HAND CONTROL UNIT ATTACK MODE FUNCTIONS (pg. 2 of 2)

FLIR Operation in Navigation Mode		
Function	**Control Operation**	**Selection Choices**
Track Mode	Choose from FLIR main menu or Tableau menu	Auto, Point, or Area
Return	Thumb	Deactivate Attack Tableau
Release Consent	Release Consent	Release Consent to fire Missile
All other functions	Right control switch "Depress"	Activates Tableau from Attack Display
All other functions		Same as navigation mode
De-clutter Level	Right control switch "Up"	No Symbology No Symbology De-cluttered

APPENDIX D

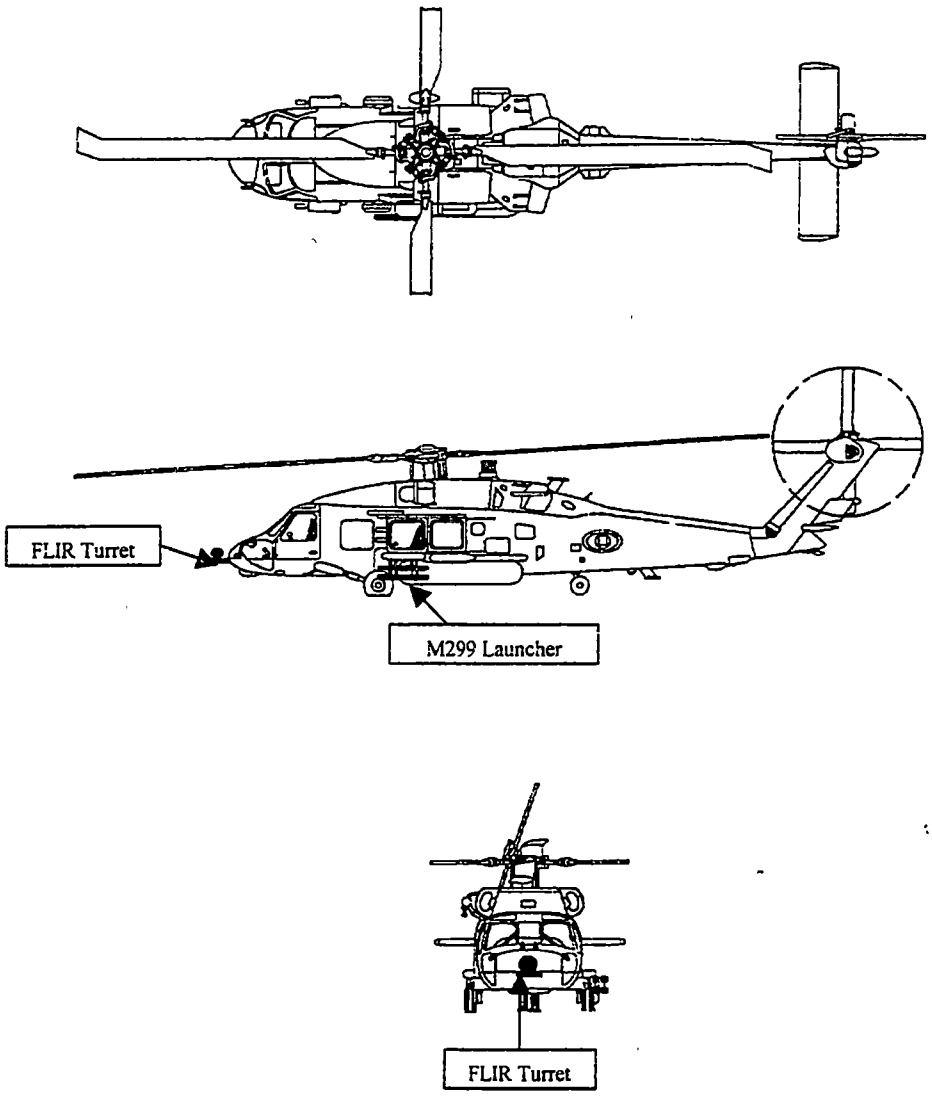

Figure 1
HH-60H HELICOPTER (1 of 2)

A1-H60CA-NFM-000

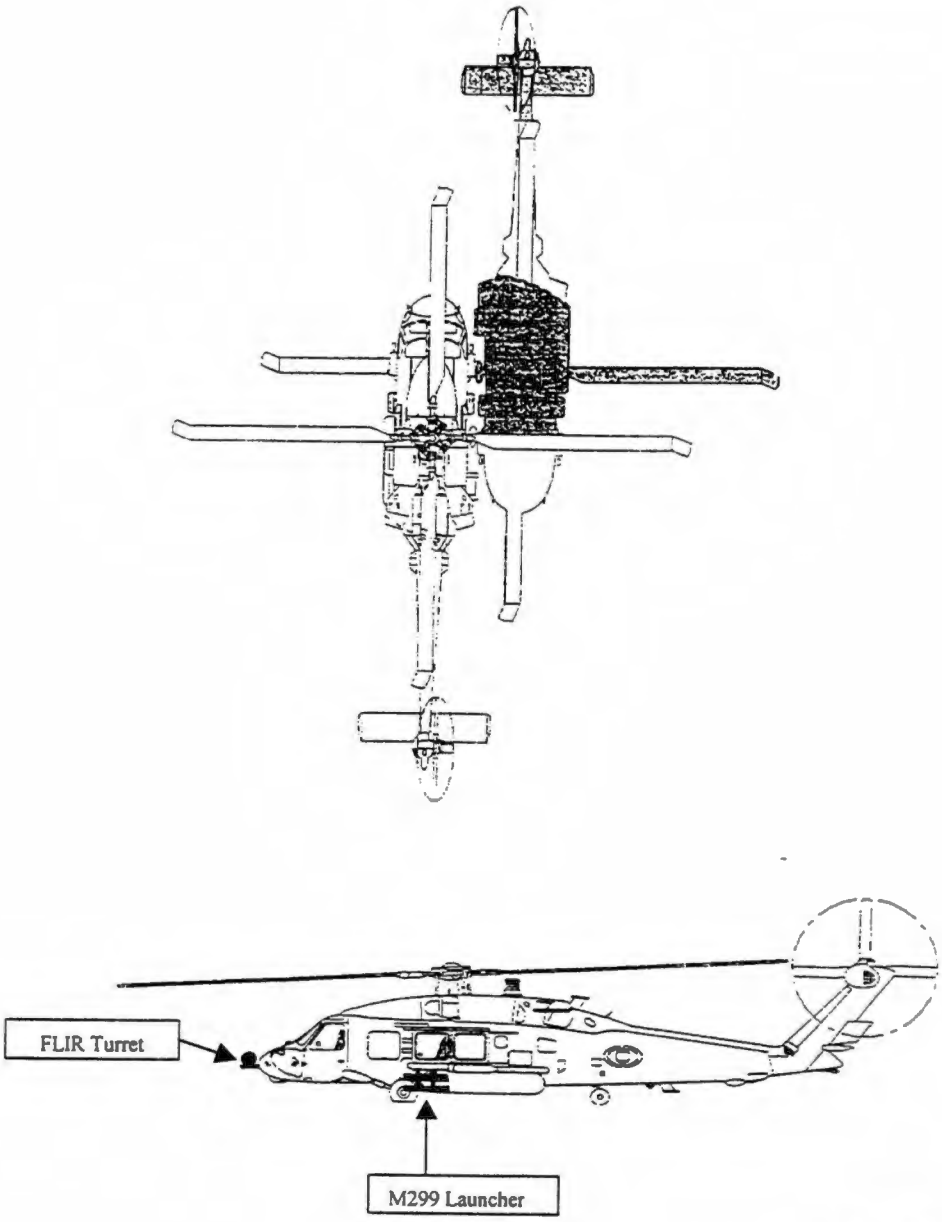

ORIGINAL

Figure 2
HH-60H HELICOPTER (2 of 2)

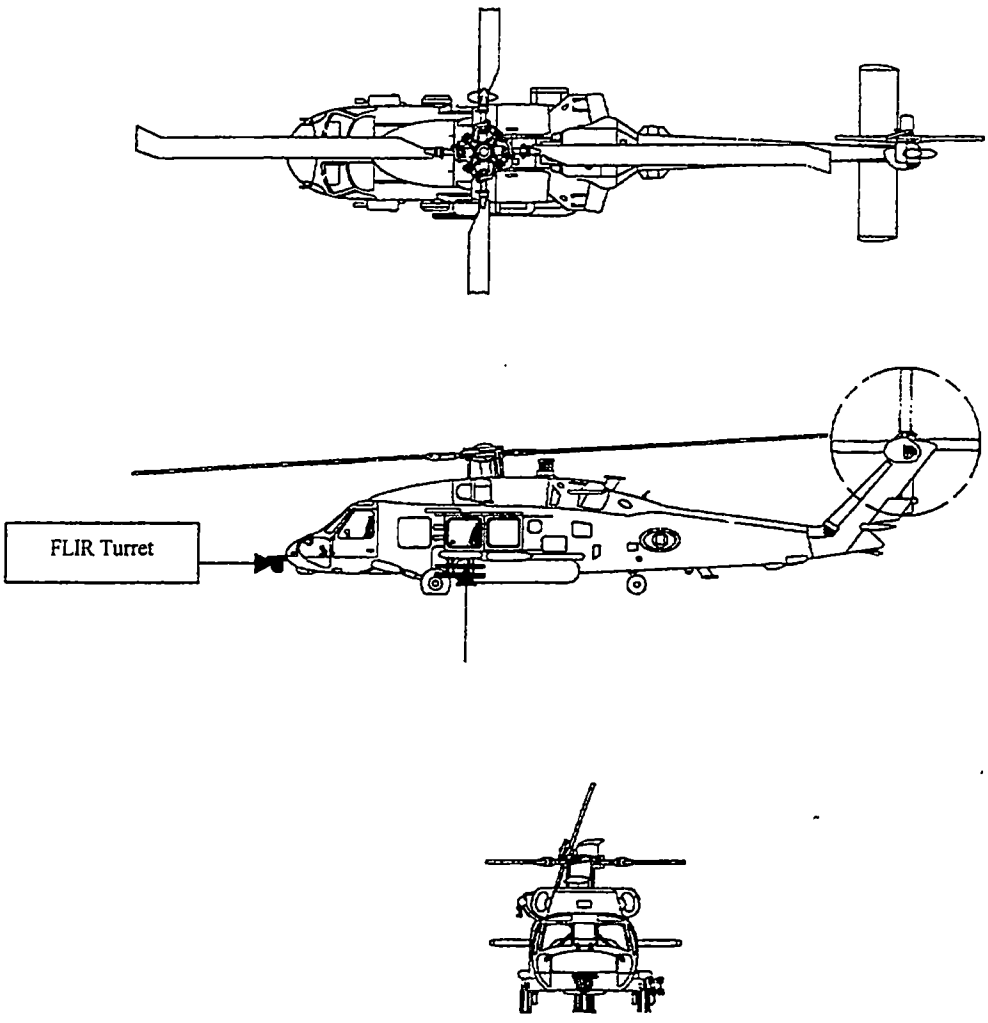

Figure 3
RECOMMENDED FLIR TURRET ORIENTATION

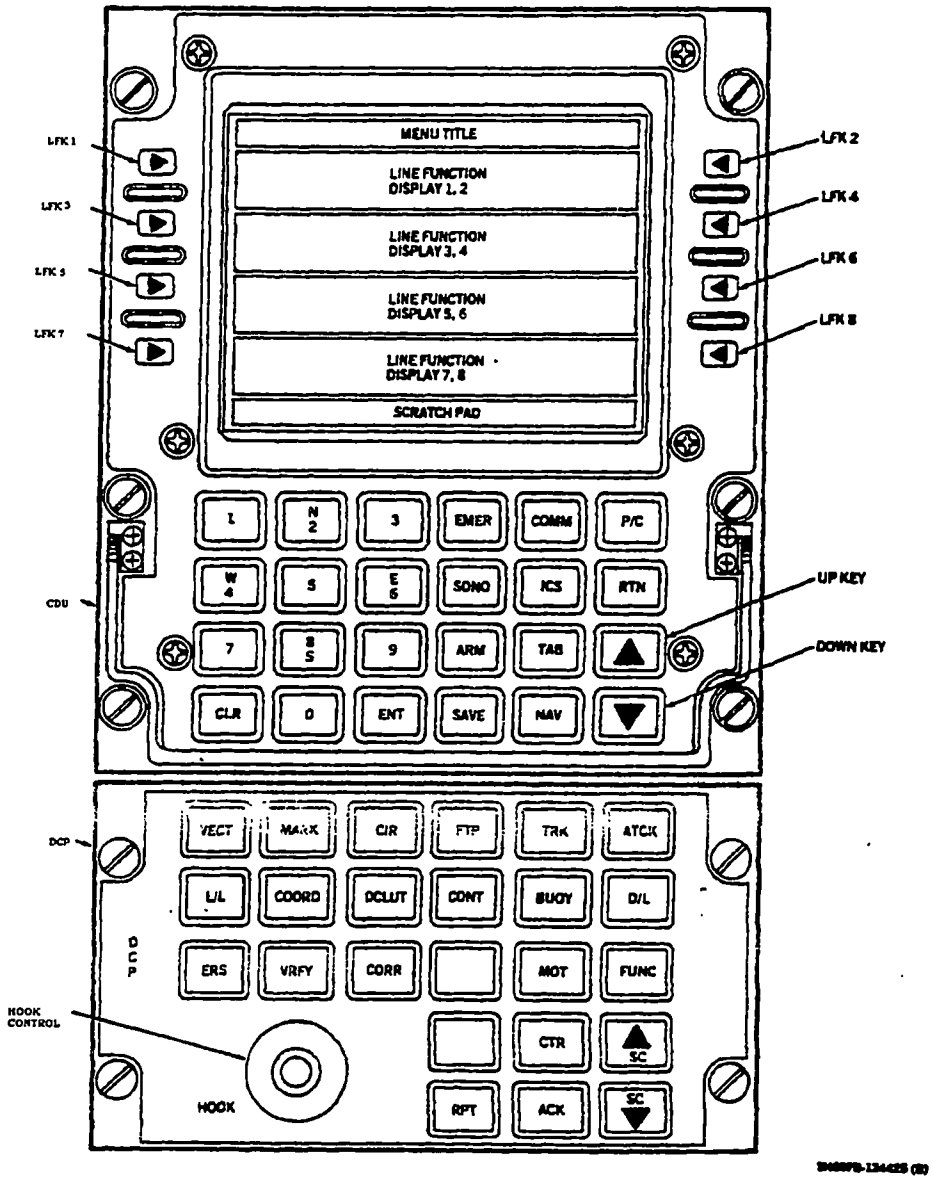

CDU and DCP Keysets and CDU Menu Display Areas

Figure 4
CONTROL DISPLAY UNIT AND DISPLAY CONTROL PANEL

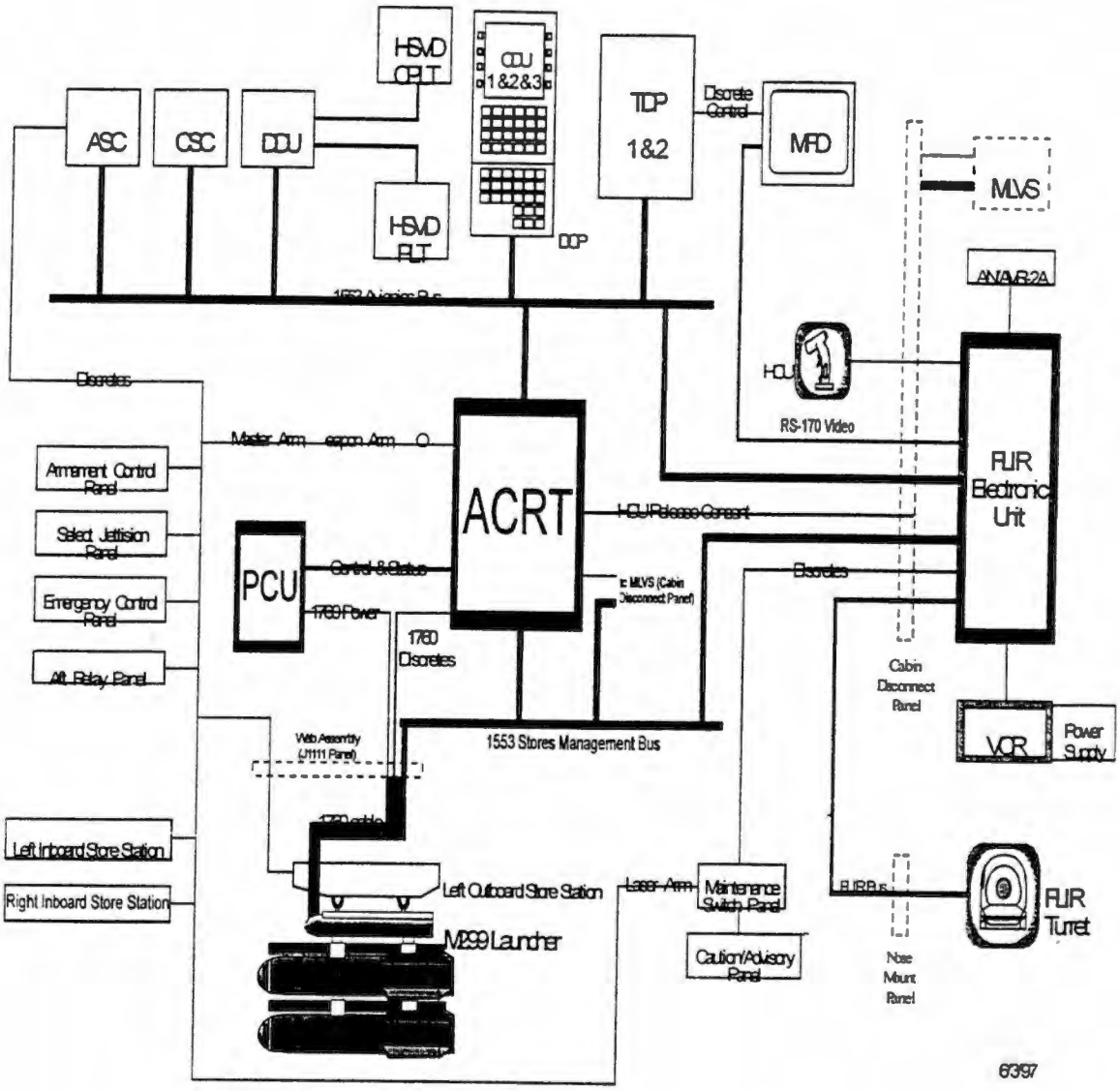

Figure 5
ARMED HELICOPTER SUBSYSTEM BLOCK DIAGRAM

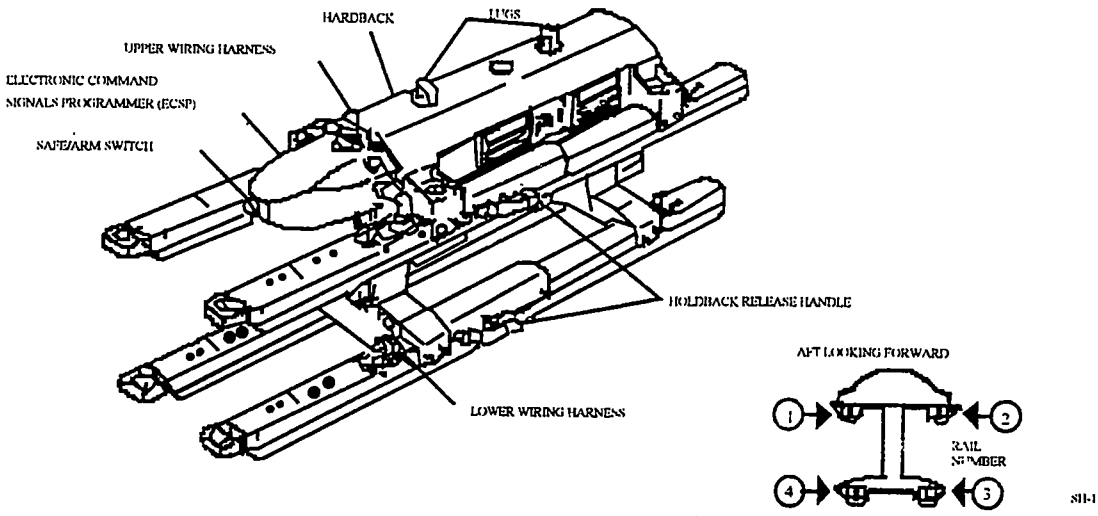

Figure 6
M299 MISSILE LAUNCHER

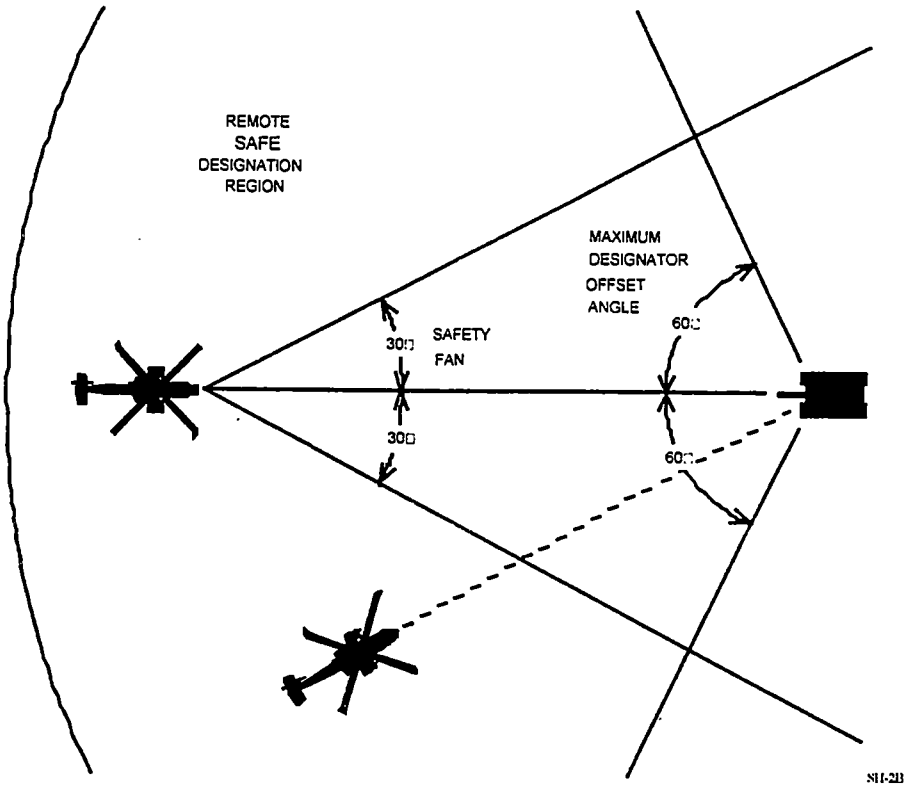

Figure 7
REMOTE DESIGNATION

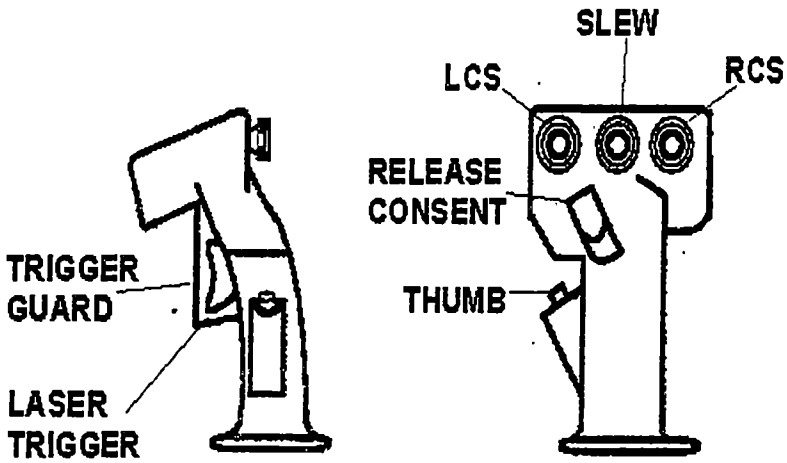

Figure 8
HAND CONTROL UNIT

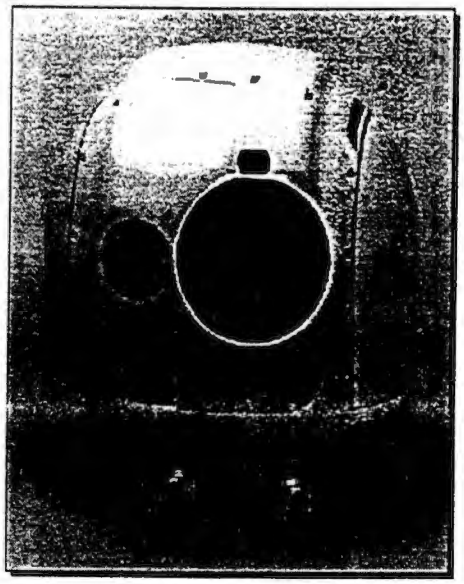

Figure 9
FLIR TURRET

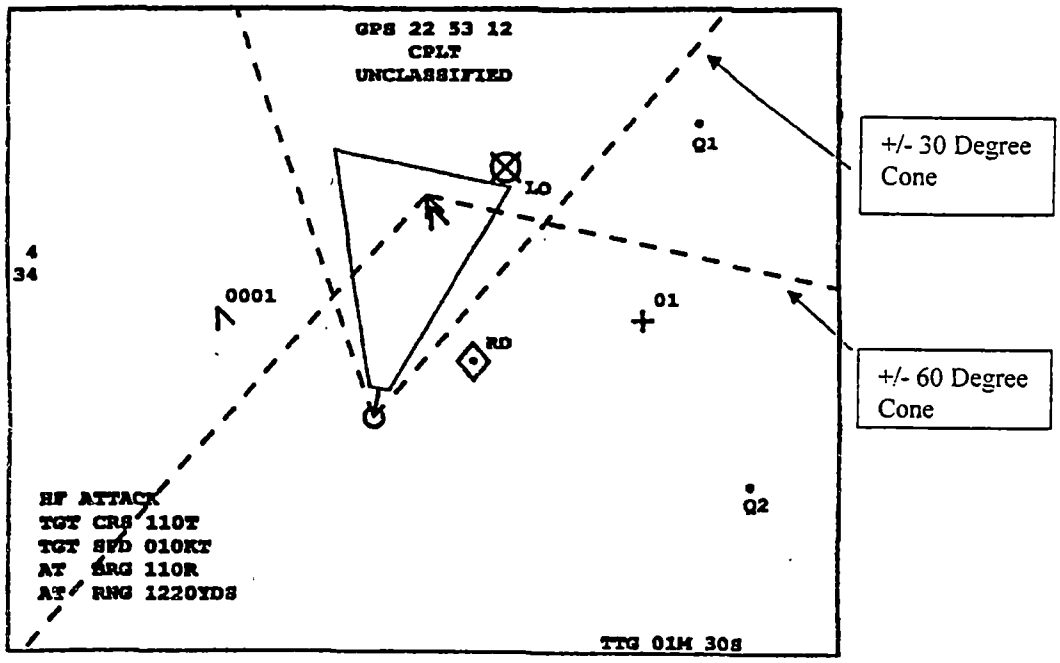

Figure 10
TACTICAL SYMBOLOGY

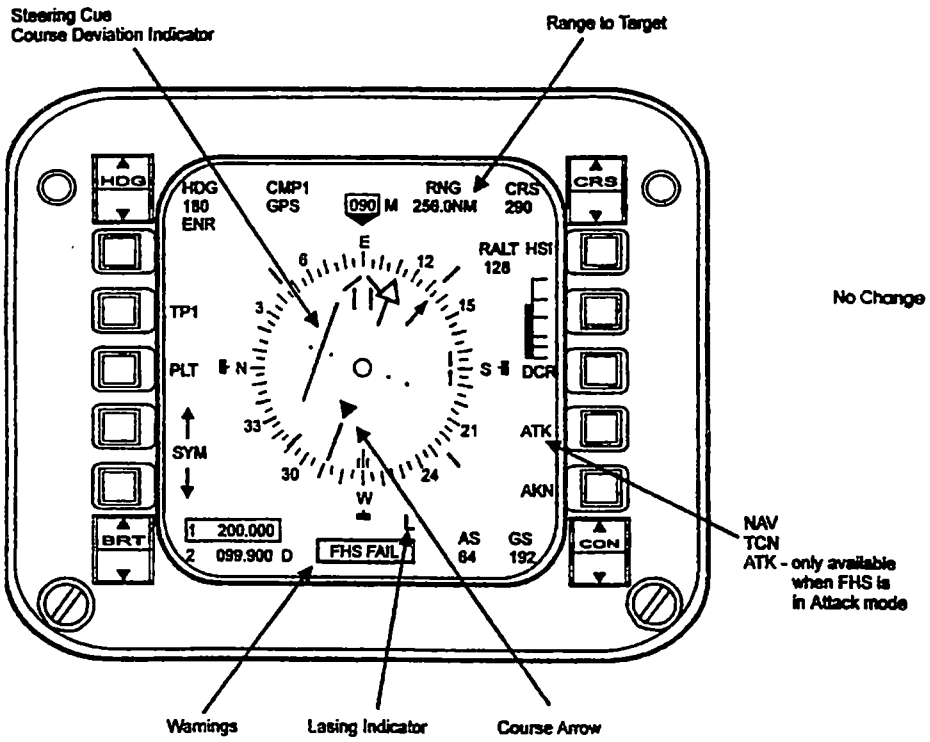

5/12/97

Figure 11
HORIZONTAL SITUATION VIDEO DISPLAY

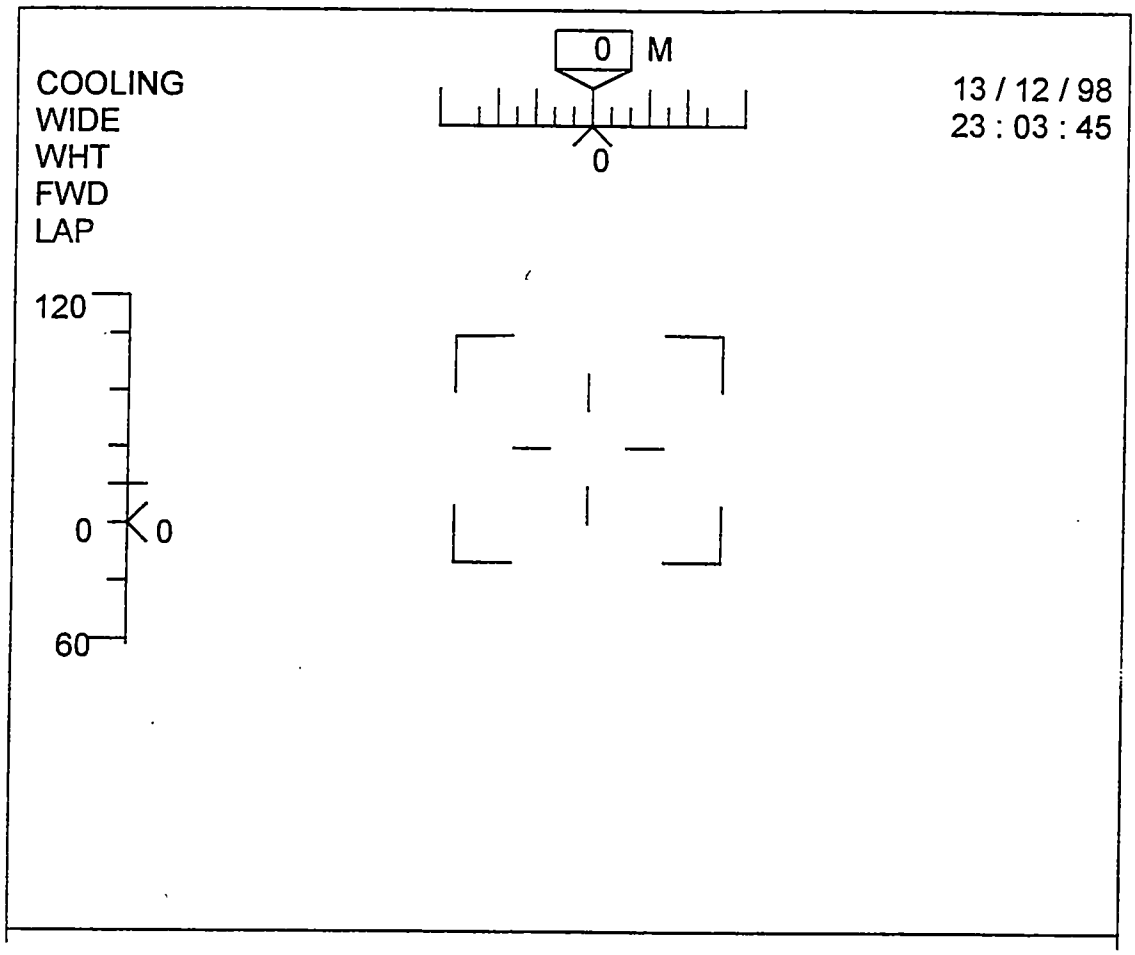

Figure 12
FLIR NAV DISPLAY

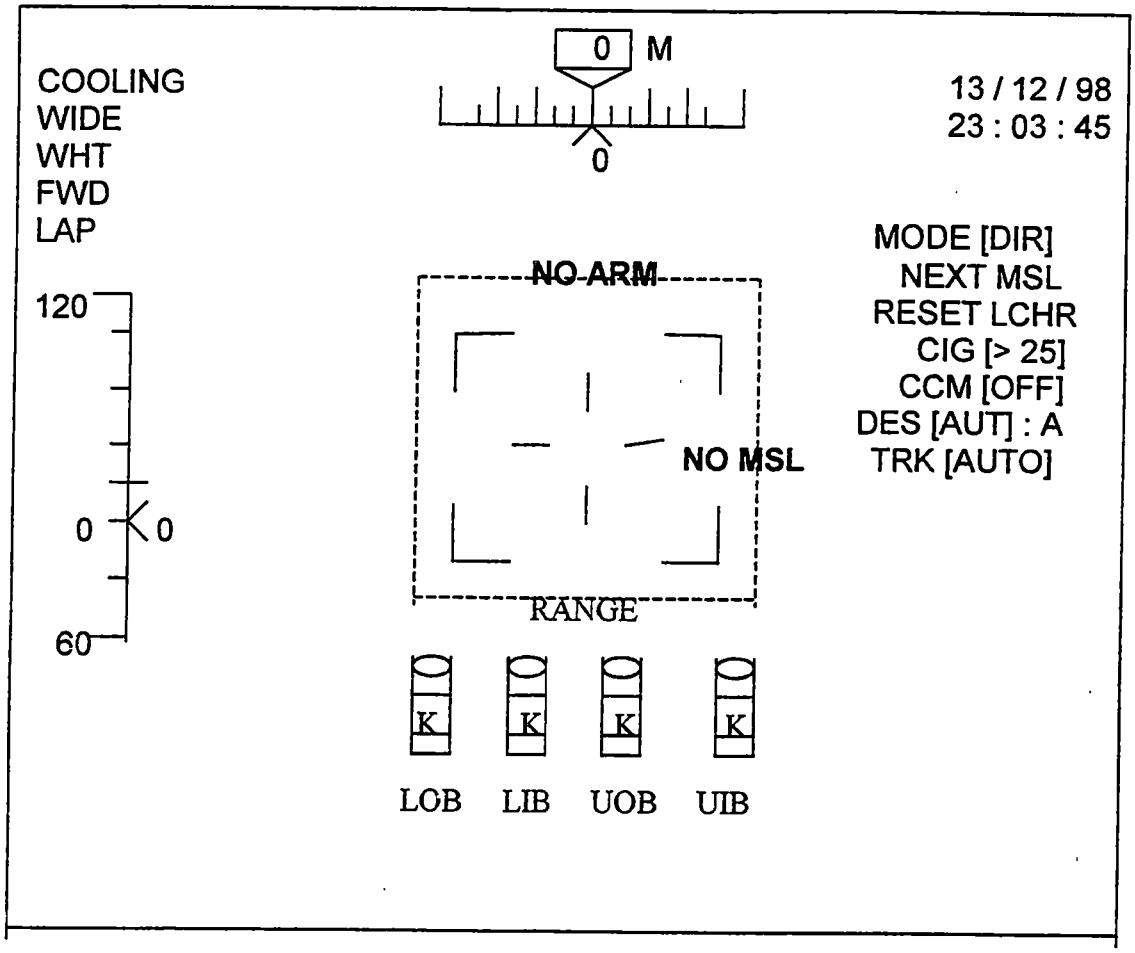

Figure 13
FLIR ATTACK DISPLAY

VITA

Michael Moore was born in Alexandria, Virginia on March 13,1968. He attended various pre-schools and elementary schools until relocating to Hot Springs, Arkansas in July 1975. He attended Hot Springs public schools until graduation from Hot Springs High School in 1986. He was appointed to the United States Naval Academy and entered in July 1986. He graduated in May 1990, receiving a Bachelor of Science degree in General Engineering and a Commission as Ensign, United States Navy. He entered flight training in August 1990 and was designated a Naval Aviator on March 27, 1992. He was assigned to Helicopter Antisubmarine Squadron FIVE in Jacksonville, Florida where he made a deployment in the SH-3H Sea King helicopter and a deployment in the H-60F/H Seahawk. He was selected to attend the United States Naval Test Pilot School in July 1996. Following successful training in June 1997, he began work as a developmental test pilot at Naval Air Station, Patuxent River, Maryland where he is presently assigned. During this period, he entered the University of Tennessee's Master of Science program.