To the Graduate Council:

I am submitting herewith a thesis written by Alan L. Wintenberg entitled "An Instrument to Synchronize Thomson Scattering Diagnostic Measurements with MHD Activity in a Tokamak." I have examined the final copy of this thesis for form and content and recommend that it be accepted in partial fulfillment of the requirements for the degree of Master of Science, with a major in Electrical Engineering.

T. V. Blalock, Major Professor

We have read this thesis and
recommend its acceptance:

Accepted for the Council:

The Graduate School

AN INSTRUMENT TO SYNCHRONIZE THOMSON SCATTERING DIAGNOSTIC MEASUREMENTS WITH MHD ACTIVITY IN A TOKAMAK

A Thesis

Presented for the

Master of Science

Degree

The University of Tennessee, Knoxville

Alan L. Wintenberg

December 1984

ACKNOWLEDGMENTS

I would like to thank a number of people whose contributions made this research possible. Ed Lazarus suggested and encouraged the research and explained the physics background. John Halliwell designed much of the computer interface, wrote the control software, produced most of the printed circuit artwork, and aided in construction and testing of the instrument. Richard Wintenberg, Richard Dyer, and Randy Kindsfather supplied invaluable advice on circuit design and the practical aspects of instrument construction. John Bell and Vic Paré were very helpful in providing explanations and data concerning MHD activity in the ISX-B tokamak. Bill Wagner and Dennis Webber fabricated the large number of printed circuit boards needed for the instrument.

I would also like to thank Dr. T. V. Blalock, who served as my major professor, and the other members of my committee, Dr. E. J. Kennedy and Dr. Jim Rochelle, for their advice and suggestions.

ABSTRACT

An instrument to synchronize the firing of a ruby laser for a Thomson scattering diagnostic with plasma oscillations was designed, developed, and evaluated. The instrument will fire the laser at a user-selected phase of an input sine or sawtooth wave with an accuracy of $\pm 15°$. Allowable frequencies range from 20 to 500 Hz for a sawtooth and from 1 to 30 kHz for a sine wave. The instrument also allows synchronization with a sine wave to be enabled by a preselected sawtooth phase.

The instrument uses analog signal processing circuits to separate the signal components, remove unwanted components, and produce zero-phase synchronization pulses. The instrument measures the period between zero-phase pulses in order to produce phase synchronization pulses delayed a fraction of the period from the zero-phase pulses. The laser is fired by the phase synchronization pulse. Unwanted signal components are attenuated by bandpass filters. A digitally controlled self-adjusting bandpass filter is used for sine processing.

The instrument was used to investigate the variation of the electron temperature profile with the phase of the X-ray signal from an Impurity Studies Experiment (ISX-B) plasma exhibiting magnetohydrodynamic (MHD) activity.

TABLE OF CONTENTS

CHAPTER		PAGE
1.	INTRODUCTION	1
	Thomson Scattering Diagnostic	1
	MHD-Driven Plasma Oscillations	3
	Synchronization of Thomson Scattering with MHD Oscillations	5
	Overview of the Synchronization Instrument	5
2.	DESIGN AND OPERATION OF THE SYNCHRONIZATION INSTRUMENT	11
	Design Philosophy	11
	Analog Signal Processing	12
	Sawtooth Phase Synchronization	16
	Self-Adjusting Bandpass Filter System	21
	Sine Phase Comparator	37
	Sine Flashlamp Advance Calculator	42
	Operation Control Logic	46
	Error Timeout Logic	50
	Input and Output Buffer	53
	Operation Summary	55
3.	COMPUTER CONTROL AND DATA ACQUISITION	57
	CAMAC System	57
	Computer Interface Module	62
	Tri-State Data Bus	68

CHAPTER PAGE

Event Timing 74
Software 77
4. SYNCHRONIZATION INSTRUMENT TESTING 82
Sawtooth Synchronization Testing 82
Sine Synchronization Testing 85
Noisy Sawtooth Generator 95
5. RESULTS 99
Synchronization with m = 1 Oscillations 99
Synchronization with m = 1 Oscillations Enabled by Sawtooth Phase 105
6. CONCLUSIONS AND SUGGESTIONS FOR FURTHER WORK 108
LIST OF REFERENCES 109
APPENDIXES 111
Appendix A. Filter Design Program 112
Appendix B. Filter Calculations 114
Appendix C. Synchronization Control Software 117
VITA 127

LIST OF TABLES

TABLE PAGE

2.1. Filter Select Bit Assignment 32
2.2. Resistor Code to Period Counter Connections 33
2.3. Summary of Monitor Outputs 53
3.1. Inputs to Synchronization Module from Computer Interface Module 64
3.2. Computer Interface Module CAMAC Commands 68
3.3. Tri-State Bus Data 69
3.4. Event Timing Channel Assignments 74
3.5. Software-Controllable Functions 80
4.1. Sawtooth Synchronization Capabilities 85
4.2. Phase Response of Sine Signal Conditioning Block 86
4.3. Filter Adjustment Noise Limits 89
4.4. Sine Synchronization Accuracy Test Results 91
4.5. Sine Synchronization Capabilities 95

LIST OF FIGURES

FIGURE PAGE

1.1. Thomson Scattering System Outline 2

1.2. Typical X-ray Signal for Tokamak Discharge 4

1.3. PIN Diode Response Showing Sawteeth 6

1.4. T_e Profile with Laser Firing 1 ms Before the Sawtooth Peak 6

1.5. T_e Profile with Laser Firing 1 ms After Collapse of the Sawtooth 7

1.6. Synchronization Instrument Functional Block Diagram 8

2.1. Analog Signal Conditioning Block Diagram 13

2.2. Analog Signal Conditioning and Sawtooth Zero-Phase Synch Circuit 15

2.3. Synchronization of Laser to Sawtooth Phase 17

2.4. Schematic for Ramp Generator 19

2.5. Sawtooth Phase Comparator and Flashlamp Advance Calculator Circuit 20

2.6. Second-Order Bandpass Active Filter 25

2.7. Digitally Adjustable Bandpass Filter Circuit 27

2.8. Resistor Tree 30

2.9. Self-Adjusting Bandpass Filter System Block Diagram 31

2.10. Filter Control and Sine Period Counter Circuit 34

2.11. Filter Output Selector Circuit 35

2.12. Filter Preset Data Source Selection 36

FIGURE PAGE

2.13. Sine Phase Comparator Circuit 38
2.14. Sine Flashlamp Advance Calculator Circuit 43
2.15. Operation Code Selection Circuit 47
2.16. Operation Control Logic Circuit 48
2.17. Error Timeout Logic Circuit 52
2.18. Input/Output Buffer Circuit 54
3.1. CAMAC System Block Diagram 58
3.2. Simplified CAMAC Dataway Layout 60
3.3. Timing of a Dataway Command Operation 61
3.4. Computer Interface Block Diagram 63
3.5. Data Latches for Computer Interface 65
3.6. Control Logic Circuit for Computer Interface 66
3.7. Data Buffer for Computer Interface 67
3.8. Tri-State Data Bus System Block Diagram 70
3.9. Tri-State Data Bus Controller Circuit 71
3.10. Tri-State Buffer Circuit 72
3.11. Event Logger Circuit 73
3.12. Event Timing Block Diagram 75
3.13. Event Timing Circuit 76
3.14. Encoding of Sawtooth Percentage and Sine Phase 79
4.1. Sawtooth Synchronization Waveforms 83
4.2. Sawtooth and Fire Laser Pulses 83
4.3. Bandpass Filter Frequency Response 88

FIGURE PAGE

4.4. Filter Adjustment with Noisy Signal 90
4.5. Sine Synchronization Phase Error as a Function of Harmonic Phase 94
4.6. Noisy Sawtooth Generator Block Diagram 96
4.7. Noisy Sawtooth Generator Circuit 98
5.1. Soft X-ray Signal for Shot Number 67772 100
5.2. Sine Synchronization Waveforms 100
5.3. X-ray Signal and Laser-Fired Pulse 101
5.4. Magnetic Islands for m = 1 Instability 103
5.5. Temperature Profiles for Shots Number 67772 and 67778 104
5.6. Soft X-ray Signal for Shot Number 67355 106
5.7. Sawtooth and Synchronization Waveforms for Shot Number 67355 107
5.8. Soft X-ray Signal and Laser-Fired Pulse for Shot Number 67355 107

CHAPTER 1

INTRODUCTION

1.1 Thomson Scattering Diagnostic

On many plasma physics experiments, a diagnostic based on Thomson scattering is used to measure the electron temperature, T_e, and the electron number density, n_e. The diagnostic usually consists of a ruby laser, a grating polychrometer, and a set of photomultiplier tubes. The laser is fired into the plasma, where some of the light is scattered from energetic electrons. The scattered photons are Doppler shifted by an amount that depends on the electron energy. The spectrum of the scattered light is measured by the polychrometer and photomultiplier combination. T_e can be calculated from the scattered spectrum, and n_e can be calculated by comparing the intensity of the scattered light to the intensity of a reference source.

An outline of the Thomson scattering diagnostic used on the Impurity Studies Experiment (ISX-B) tokamak is shown as Figure 1.1. This diagnostic has been discussed elsewhere,[1] and only one important aspect that affects this work will be discussed here. The laser used is a high-power, Q-switched ruby laser. The ruby rods are pumped by a number of flashlamps, and lasing occurs when the laser is Q-switched. To obtain maximum energy from the laser, there must be a delay on the order of a millisecond between firing the flashlamps and Q-switching the laser. The minimum delay needed to produce 80% of the maximum energy will be referred to as the *flashlamp delay*, and the period after the flashlamp delay during which the laser will produce at least 80% of its maximum energy will be referred to as the *Q-switch window*. Normally only a fire

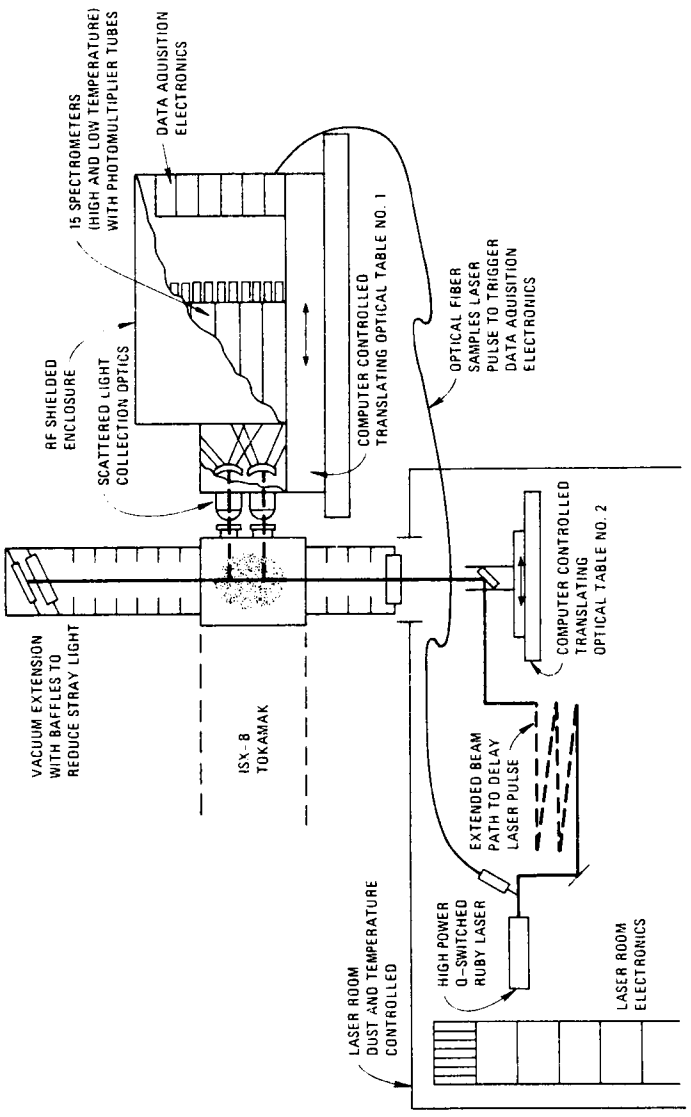

Figure 1.1. Thomson scattering system outline.

flashlamp trigger is used and the laser Q-switches after an internal delay, but an external Q-switch trigger can be used if desired.

1.2 MHD-Driven Plasma Oscillations

A high-temperature plasma, such as that produced by a tokamak, has significant soft X-ray emissions. The soft X-ray intensity is a function of the electron temperature and density and can be measured with a semiconductor detector such as a positive intrinsic negative (PIN) photodiode. Such detectors can be used to study magnetohydrodynamic (MHD) instabilities that cause fluctuations in the temperature and density. Typical detector output for a neutral-beam-heated, ISX-B tokamak plasma consists of a dc level plus a 100-Hz sawtooth and a 10-kHz sine wave[2] as shown in Figure 1.2.

Plasma oscillations introduce large fluctuations in T_e ($\sim$30%), as measured by Thomson scattering. The duration of the laser pulse is very short [30-ns full-width at half maximum (FWHM)] compared to the plasma oscillations described, and because the laser is not fired in synchronism with the oscillations, the measured temperature and density vary with the phase of the oscillation. The laser may be fired only once per tokamak shot, but average plasma conditions during a series of shots are very similar. However, shot-to-shot variations in T_e of greater than 20% have been observed, even though typical accuracy for a Thomson scattering temperature measurement is 10%. The observed variation in T_e is due to plasma oscillations.

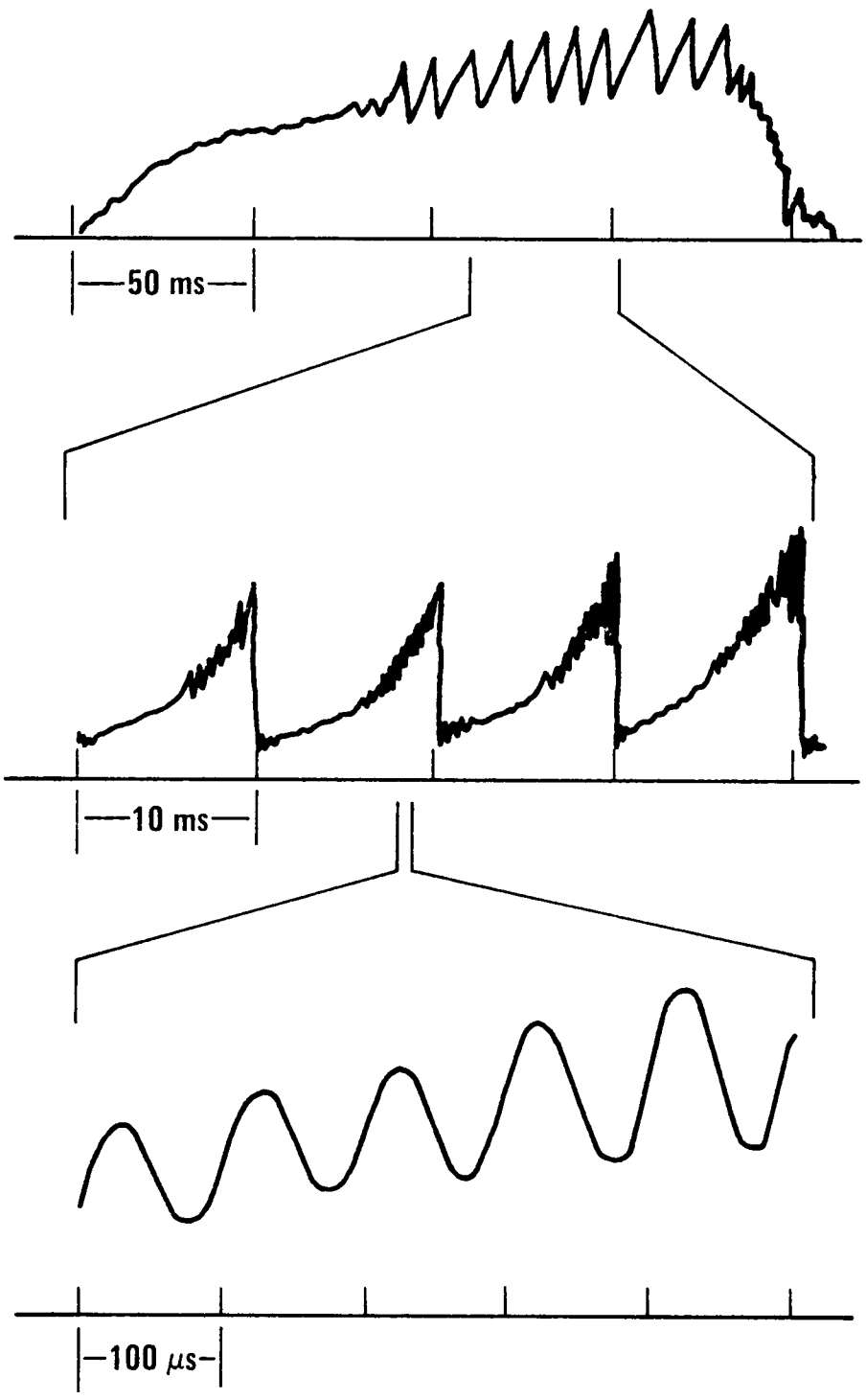

Figure 1.2. Typical X-ray signal for tokamak discharge.

1.3 Synchronization of Thomson Scattering with MHD Oscillations

A device that could synchronize the firing of the laser with plasma oscillations would allow the determination of an average temperature and density or would even allow a study of temperature variations during a type of oscillation. Such devices have been constructed and used elsewhere.[3] Some preliminary work was done to evaluate the usefulness and practicality of synchronizing the Thomson scattering system on ISX-B to sawtooth oscillations. By bandpassing the soft X-ray signal and then differentiating it, trigger pulses corresponding to the sawteeth edges were produced. By delaying from this pulse, the laser could be fired at any point along the sawtooth. Thomson scattering measurements taken by using this instrument show that the temperature profile differs markedly depending on the phase of the sawtooth when the measurement was made. An example of this effect is detailed by Figures 1.3, 1.4, and 1.5.

1.4 Overview of the Synchronization Instrument

The instrument outlined in Figure 1.6 was developed and used to synchronize laser firing with plasma oscillations. This instrument can fire the laser at any preselected phase of the input sawtooth or sine-wave oscillation. Alternatively, the laser may be fired on the sine-wave phase after reaching a certain sawtooth phase if the oscillations have both of these components. The instrument may be controlled either manually or by computer or by a combination of the two. Instrument parameters and data concerning the synchronization process can be read by the computer.

The instrument synchronizes with a sawtooth waveform by detecting the edges of sawteeth through bandpassing and differentiation. The time between

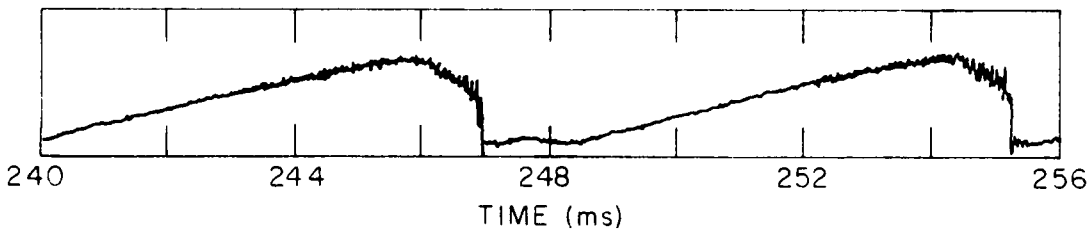

Figure 1.3. PIN diode response showing sawteeth.

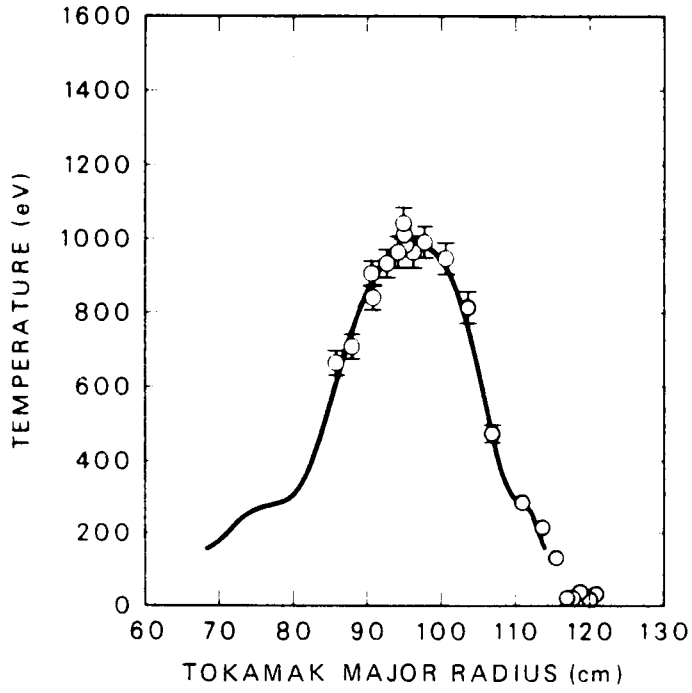

Figure 1.4. T_e profile with laser firing 1 ms before the sawtooth peak.

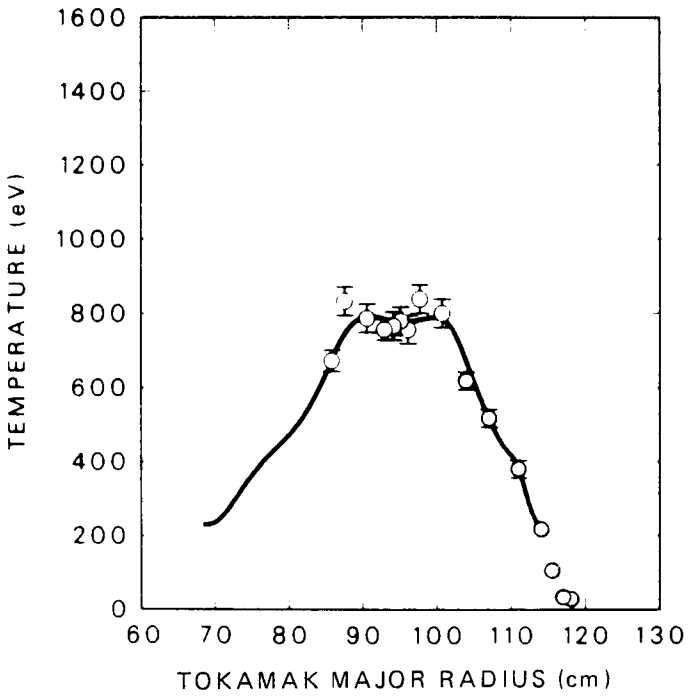

Figure 1.5. T_e profile with laser firing 1 ms after collapse of the sawtooth.

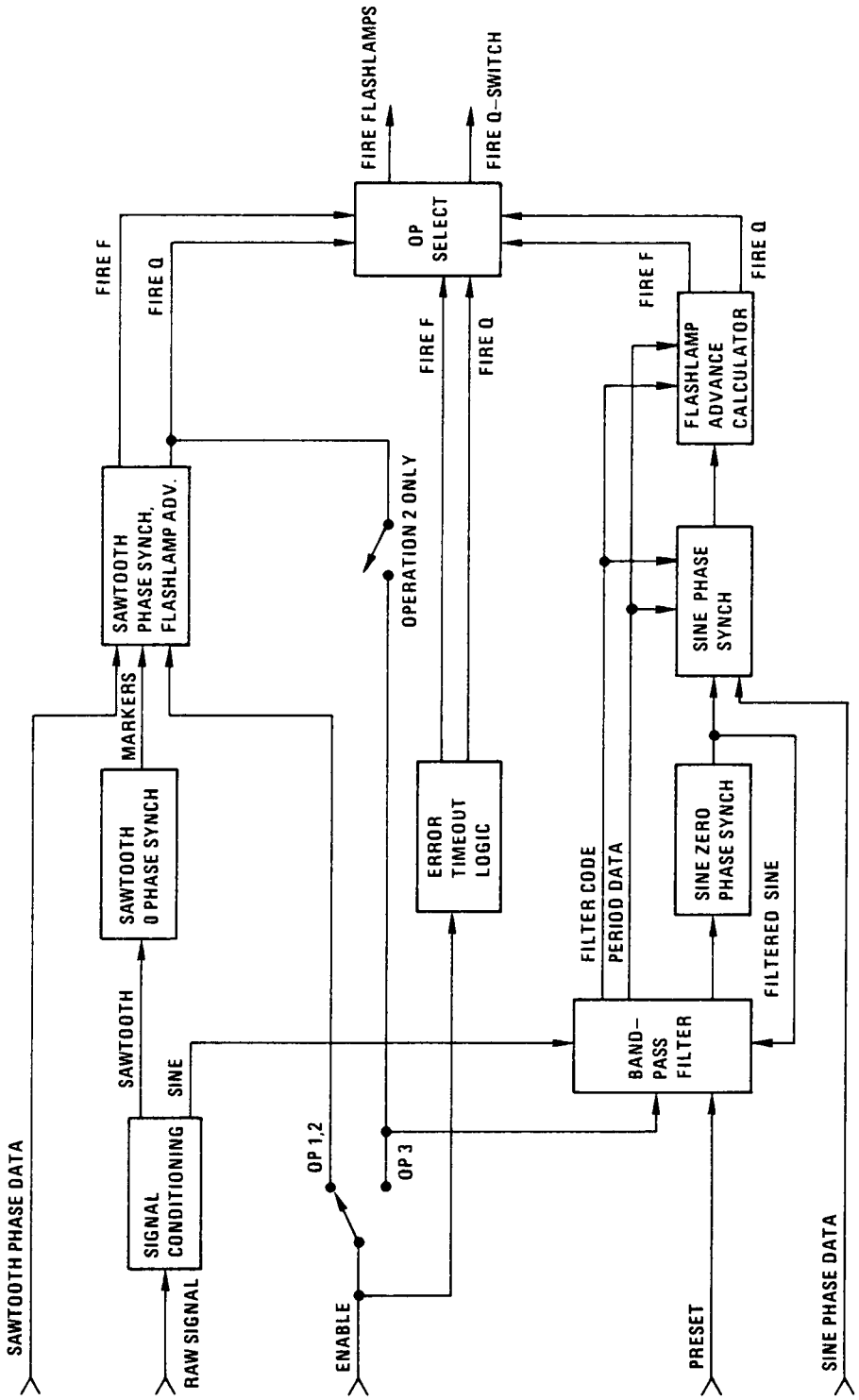

Figure 1.6. Synchronization instrument functional block diagram.

sawtooth edges is measured by converting time to voltage by integrating a constant current. When an identical integrator started on a subsequent edge reaches a preselected percentage of that voltage, the laser is fired. A percentage of the voltage is directly related to the phase of the sawtooth.

Synchronism with a sine wave is achieved through a somewhat more complicated process. Positive slope zero-crossings of the waveform are detected and used to start and stop a digital timer. This digital information is used to tune a bandpass filter to the sine frequency. Filtering removes unwanted components of the signal. The zero-crossings are again detected, and the time between zero-crossings is measured by converting time to voltage by integrating a constant current. A subsequent zero-crossing starts an identical integrator, and the laser is fired when a preselected fraction of the voltage corresponding to the period is reached. A fraction of the voltage corresponds directly with the phase of the sine wave.

In both types of synchronization, the waveform period is short enough, compared to the flashlamp delay, that the flashlamps must be fired in advance. The laser is Q-switched when the desired phase is reached. The delay between a Q-switch trigger and the actual laser pulse is less than 100 ns and is negligible. An advanced flashlamp trigger for sawtooth synchronization requires only offsetting the output of the second integrator, but for sine-wave synchronization, much additional circuitry is needed. Basically, this circuitry begins a countdown of an integral number of periods when it detects the desired phase. When the countdown reaches the laser delay time, the flashlamps are fired. When the countdown reaches zero, the waveform should have the desired phase again and the laser is Q-switched.

The computer interface allows a computer to perform two important functions: control and data acquistion. The control functions simply duplicate most of the manual controls that allow setting synchronization parameters. Data acquisition functions involve recording the occurrence of various events during the synchronization process and the time of occurrence relative to some reference time. This data is valuable because it allows the user to rapidly determine if the synchronization was successful (and, if not, to determine why).

CHAPTER 2

DESIGN AND OPERATION OF THE SYNCHRONIZATION INSTRUMENT

In this chapter, the design of the synchronization circuits is discussed. The purpose of each step in the synchronization process is explained and followed by a description of the circuitry performing that process. Factors influencing the design are considered and unusual aspects of the design are discussed in detail. Finally, the operation of the synchronization instrument is summarized.

The design makes considerable use of operational amplifier circuits. Two very useful operational amplifier circuits—the integrator and the second-order bandpass filter—are discussed in some detail.

2.1 Design Philosophy

Before considering the details of the circuits that make up the synchronization instrument, the philosophy that guided the design should be noted. The instrument was designed with the following attributes in mind: reliable operation, self-diagnostic ability, and on-board data processing. Reliable operation refers to tolerance to less-than-ideal signals. For less-than-ideal signals, the synchronization instrument performance may be degraded, but the laser should still be fired near the desired phase. Self-diagnostic ability refers to the action of circuits that monitor the synchronization process. The outputs of these circuits allow the user to better understand the process, to make adjustments to the synchronization parameters and see the results, and to check the performance of the instrument. On-board data processing refers to calculations performed with

measured quantities. The results of these calculations are needed for the synchronization process and, due to the speed required, cannot be performed by an external computer. Applications of these principles will be discussed where they are applied to the design.

2.2 Analog Signal Processing

As outlined in Figure 2.1, the output of the PIN diode is the input to a signal-conditioning block, where it is amplified, filtered, and split before being processed by a sawtooth channel and a sine channel. The input is buffered by an operational amplifier connected as a unity-gain buffer. A series resistance and zener diodes protect the buffer from inputs outside the range of ± 10 V. A simple *RC* high-pass filter with a 24-Hz cutoff frequency removes the dc component of the signal before the signal is amplified. Gains of one, two, five and ten are manually selectable. The signal at this point is split into the sine and sawtooth channels and is also brought to a front-panel monitor. All analog signals brought to the front panel for monitoring purposes pass through unity-gain buffers with 1-kΩ output impedance.

2.2.1 Sawtooth Channel

The sawtooth channel produces sawtooth zero-phase synchronization pulses (hereafter referred to as *sawtooth markers*) by low-passing the signal to remove the higher frequency sine wave from the sawtooth and then differentiating the sawtooth to produce a pulse synchronous with the sharp edge of the sawtooth. When this pulse exceeds a threshold voltage, a TTL-level pulse (the sawtooth marker) is produced. This process is illustrated in Figure 2.1.

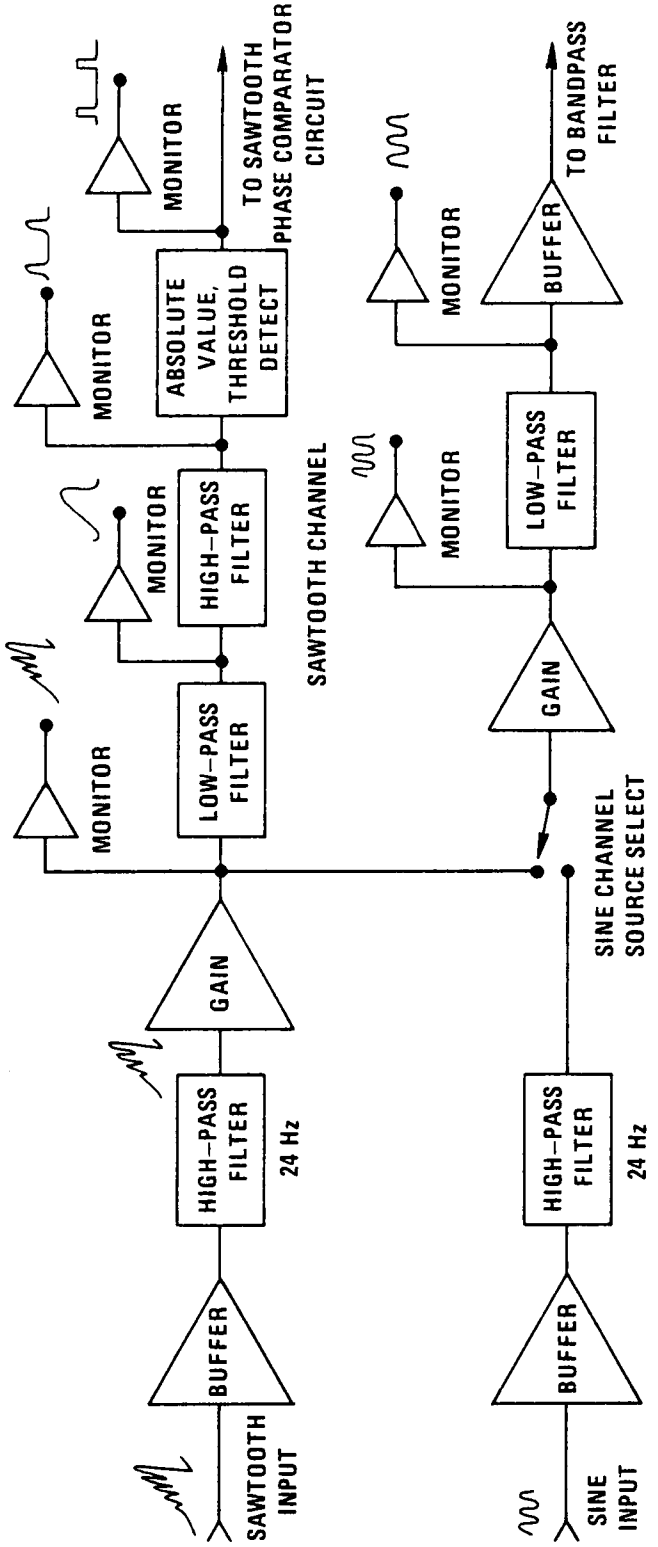

Figure 2.1. Analog signal conditioning block diagram.

As shown in Figure 2.2, the low-pass filter is a second-order active filter (U8) with a −3 dB frequency of 1.36 kHz. Differentiation is accomplished by an *RC* high-pass filter with a −3 dB frequency of 3.2 kHz. This combination was empirically determined to be optimum for producing trigger pulses from a 100-Hz sawtooth contaminated with an equal amplitude 10-kHz sine wave. The combination must attenuate the sine wave so that it does not produce spurious triggers but leave enough of the high-frequency components of the sawtooth so that the pulse resulting from differentiation lags only a small fraction of a sawtooth period after the sawtooth edge.

The differentiated signal passes through an inverting absolute-value circuit (U11 and U12). This allows a sawtooth of either polarity to produce a positive pulse after differentiation and rectification. This pulse is compared to a threshold voltage that is manually adjustable from 0 to 10 Vdc. The comparator output (U14) drives a one-shot (U15), so the result is that the leading edge of the differentiated sawtooth produces a sawtooth marker pulse. The one-shot duration is adjusted to approximately 2 ms, which is much longer than the differentiated sawtooth pulse, so noise on that pulse does not produce multiple sawtooth marker pulses. This pulse width does, however, limit the minimum sawtooth period to 2 ms.

2.2.2 Sine Channel

There are two inputs to the sine channel—the buffered sawtooth already described and an auxiliary sine input. This allows one signal source to provide the sawtooth and another to provide the sine wave. As an example, the sawtooth source might be a PIN diode and the sine source could be a Mirnov

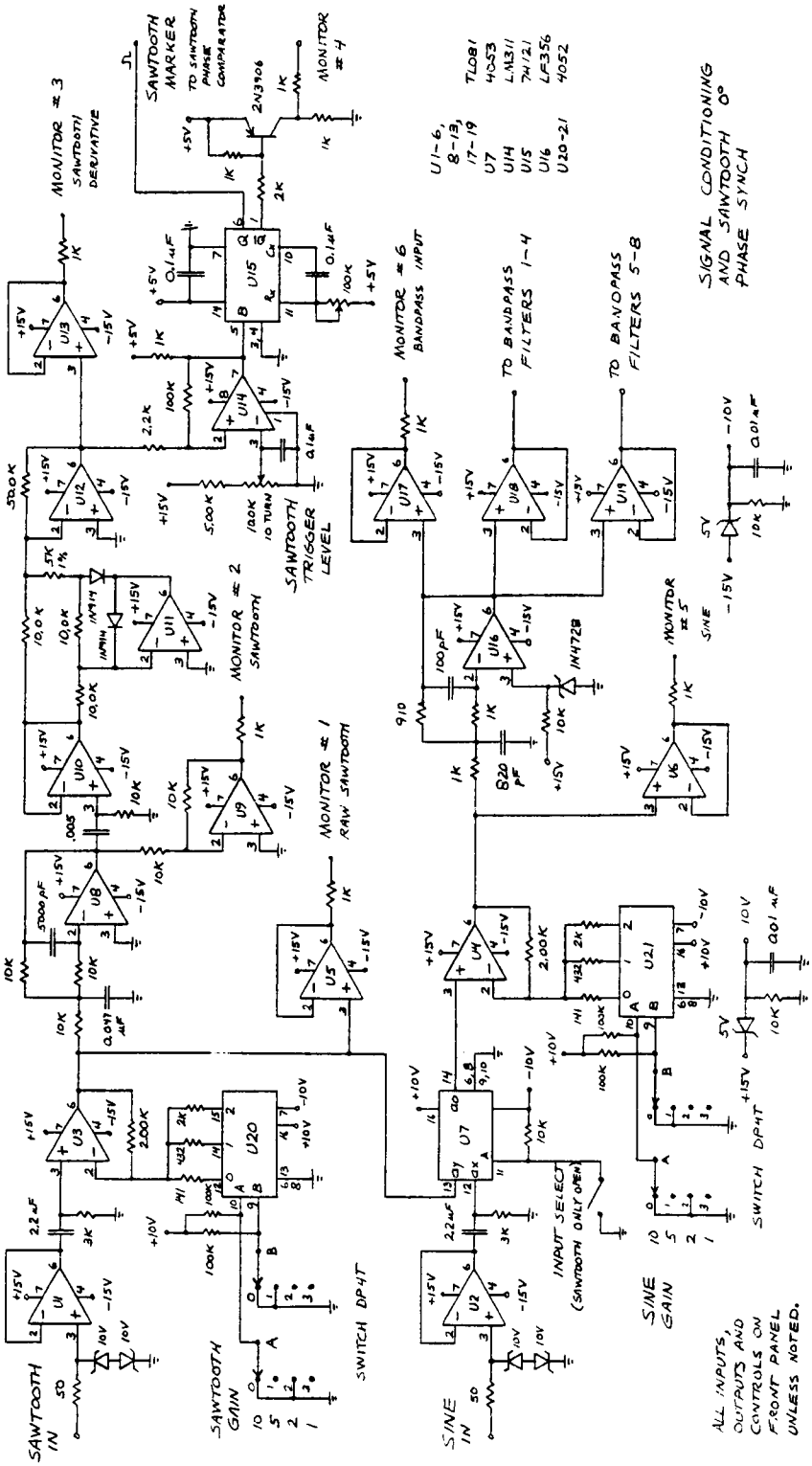

Figure 2.2. Analog signal conditioning and sawtooth zero-phase synch circuit.

coil (magnetic pickup loop). A front panel switch controls an analog switch that selects the input to be used. The signal is amplified and then passes through a second-order Butterworth low-pass filter (U16) with a −3 dB frequency of 700 kHz. The maximum useful sine frequency is 62 kHz, and it is desirable to attenuate higher frequencies but not to phase shift signals below 62 kHz. The low-pass filter provides 24 dB of attenuation at 2 MHz and only seven degrees of phase shift at 62 kHz. The filter output has a 3.3-Vdc offset so that the bandpass filter input is always positive. Two unity gain buffers drive the bandpass filters.

2.3 Sawtooth Phase Synchronization

Synchronization with a sawtooth waveform requires the ability to generate a synchronization pulse at any predetermined percentage of the sawtooth period. A voltage proportional to the sawtooth period can be obtained by integrating a constant current for one period. The output of the integrator is a ramp. By taking a percentage of this voltage and comparing it to a duplicate ramp begun by a subsequent sawtooth, a synchronization pulse is produced at the selected percentage of the sawtooth period. This pulse is used to Q-switch the laser. If a voltage is added to the fraction of the first ramp and the sum is compared to the subsequent ramp, a trigger advanced from the synchronization pulse is obtained. This pulse is used to fire the laser flashlamps. The sawtooth synchronization scheme is shown as Figure 2.3. This is essentially the same scheme described in ref. 3. Actually the sawtooth period is obtained as the average of two ramps with each ramp timing one period.

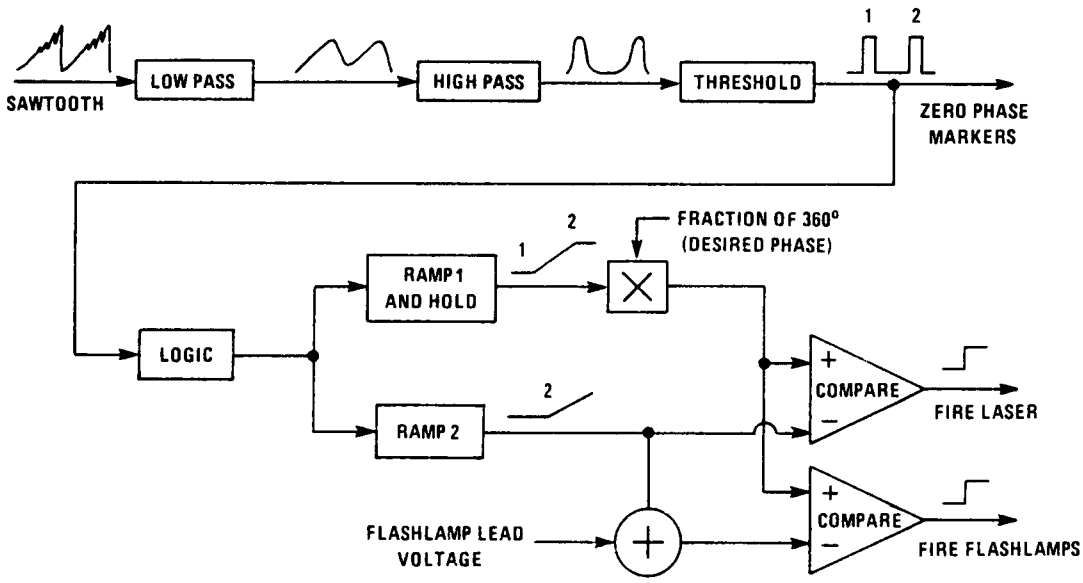

Figure 2.3. Synchronization of laser to sawtooth phase.

The ramp generators used are integrators with CMOS analog switches added to discharge and charge the capacitor. A schematic of a typical ramp generator is shown in Figure 2.4. The integrator is governed by

$$V_R = -\frac{V_{\text{ref}}}{RC}\, t \quad . \tag{2-1}$$

Assuming that Switch 2 is open, the capacitor charges when Switch 1 is closed and holds when Switch 1 is open. When Switch 2 is closed, the capacitor discharges.

The circuit diagram for the sawtooth phase comparator and flashlamp advance calculator is shown as Figure 2.5. The sawtooth marker pulses drive a 3-bit counter (U1) that, in turn, drives combinational logic controlling the ramp generators (U8, U9, and U10). The first marker pulse starts the first ramp. The second marker pulse starts the second ramp and causes the first ramp to hold. The third marker pulse starts the third ramp and causes the second ramp to hold. The first two ramps are summed and inverted, and a percentage is taken by way of a potentiometer for manual control or a digital-to-analog converter (DAC) (U15) for computer control. In either case, full scale is 200%. The DAC output (percentage of the period) is compared to the inverse of the third ramp voltage plus an advance voltage. When that sum exceeds the DAC output, a fire flashlamp pulse is produced. Similarly, the inverse of the third ramp voltage is compared to the DAC output and produces the fire Q-switch pulse.

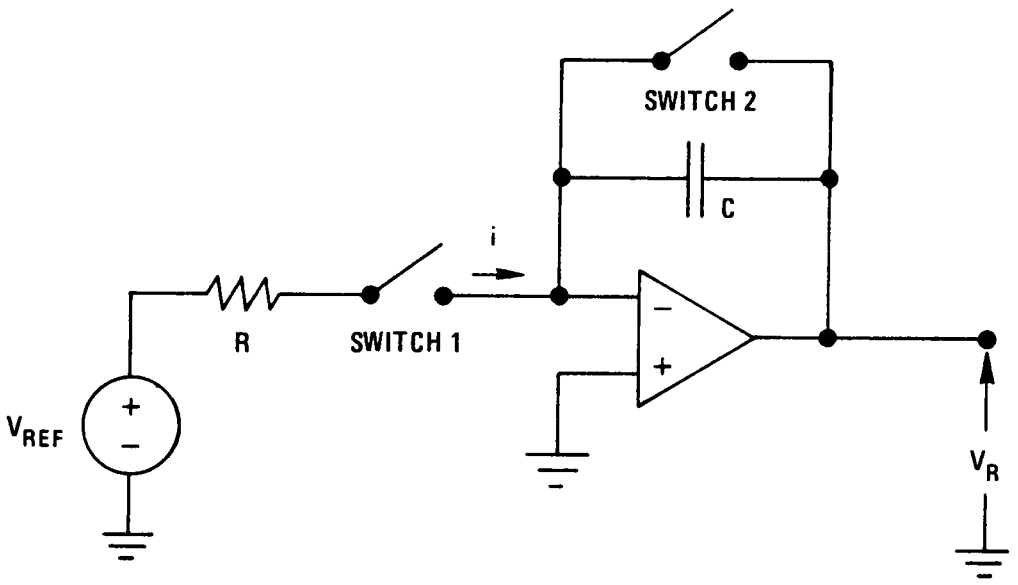

Figure 2.4. Schematic for ramp generator.

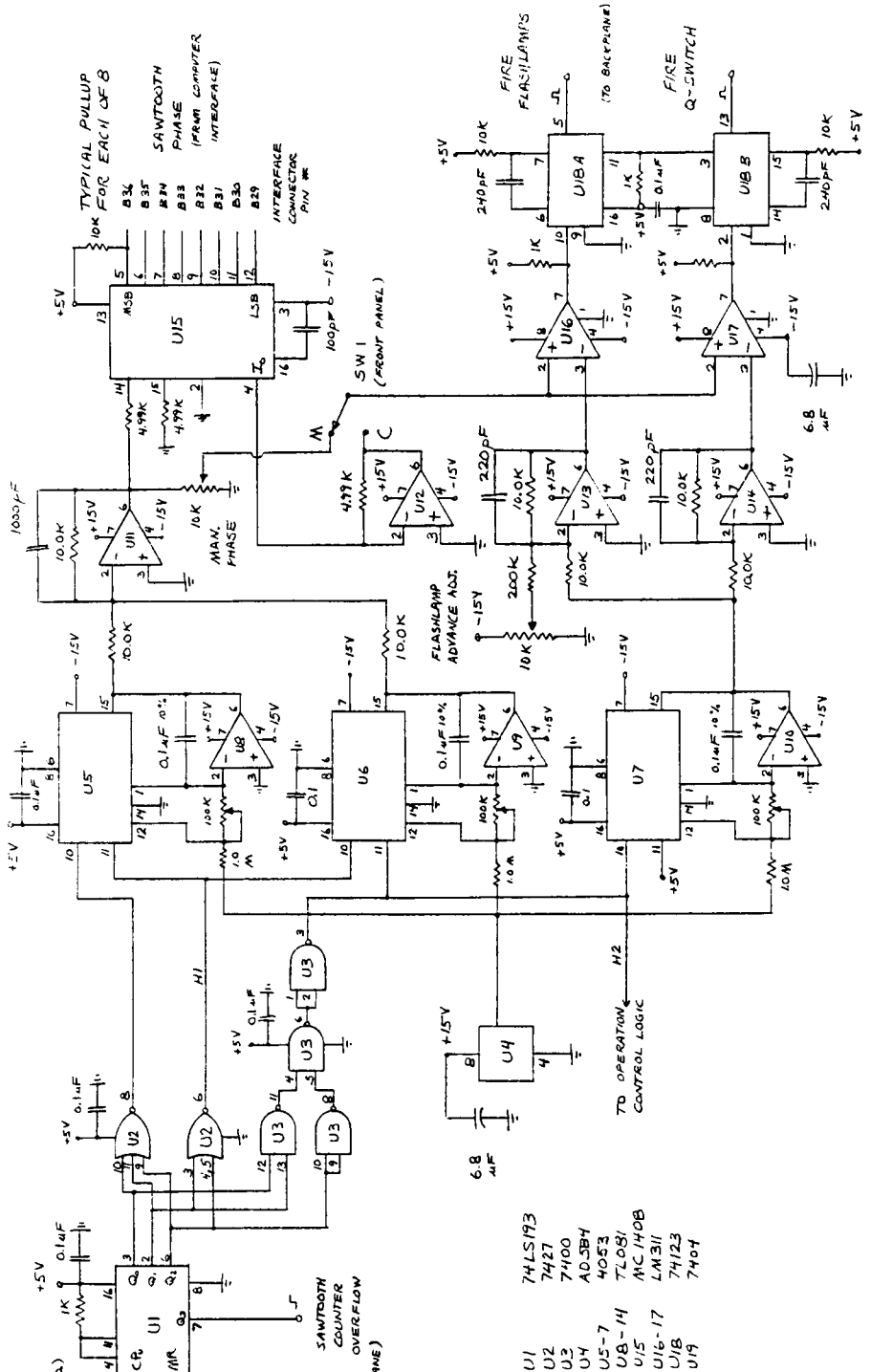

Figure 2.5. Sawtooth phase comparator and flashlamp advance calculator circuit.

Because the flashlamp must fire in advance, low percentages are not allowable if the selected percentage of the period is less than the flashlamp delay. The only way to fire the laser near the beginning of a sawtooth is to wait for the next sawtooth. This is accomplished by adding 100% to the desired percentage.

2.4 Self-Adjusting Bandpass Filter System

The self-adjusting bandpass filter system is the key to the synchronization with the sine-wave oscillations. This system requires the user to input an estimate of the frequency of the desired oscillation. The instrument tunes a bandpass filter to that frequency. The filter controller then measures the period of the bandpassed signal and uses that information to readjust the bandpass filter. With the bandpass filter adjusted so that only the desired frequency is passed, zero-phase information is easily obtained by detecting zero-crossings. Phase synchronization pulses can then be obtained by delaying a fraction of the time between two zero-crossings.

There are a number of constraints on the characteristics of the bandpass filter. The oscillation of interest may be present for only part of a sawtooth period, so measurement of the sine-wave period must be limited to a few cycles and not begun until the proper part of the sawtooth. The signal may be contaminated with harmonics so that the signal-to-noise ratio is poor. The bandpass center frequency must be very close to the signal frequency; otherwise, the bandpass output will be phase shifted excessively and will throw the synchronization off. Also, because of time limitations, any adjustments made to the filter must require a few cycles at most.

2.4.1 Bandpass Filter Characteristics

Before discussing the details of the self-adjusting bandpass filter, some discussion of a general bandpass filter is needed. A bandpass filter can be characterized by its center frequency, gain, and Q. The Q of a bandpass filter is a measure of the width of the passband, normalized to the center frequency. The definition of Q is

$$Q = \frac{\omega_c}{\Delta\omega} \quad , \tag{2-2}$$

where ω_c is the center frequency and $\Delta\omega$ is the -3dB bandwidth.

The transfer function for a second-order bandpass filter is

$$A(s) = \frac{H_c \alpha \omega_c s}{s^2 + \alpha\omega_c s + \omega_c^2} \quad , \tag{2-3}$$

where H_c is the gain at the center frequency and ω_c is the center frequency in radians per second.[4] It can be shown that α is the inverse of Q, thus

$$A(s) = \frac{H_c \omega_c s/Q}{s^2 + \omega_c s/Q + \omega_c^2} \quad , \tag{2-4}$$

and the bandpass transfer function is now expressed in terms of the center frequency, gain at the center frequency, and the Q.

Evaluation of this transfer function reveals that frequencies within the passband can be subjected to significant phase shift. To limit the phase shift to a small amount, say 20° or less, it can be shown that the signal frequency must lie within the range $\omega_c \pm \Delta\omega_1/2$, where

$$\Delta\omega_1 = \Delta\phi\omega_c/Q \tag{2-5}$$

and the maximum allowable phase shift is $\Delta\phi$. Equation (2-5) is derived in Appendix B.

2.4.2 Bandpass Filter Design

The problem of limiting phase shift impacts the filter design because a high-Q filter attenuates unwanted signal components strongly, but a low-Q filter has a relatively wider range with limited phase shift. The higher the filter Q, the more filters are needed to cover a given frequency range. Fortunately for the synchronizing application, most of the noise to be filtered out consists of harmonics of the signal frequency, so a relatively low-Q filter can be used. For example, a Q of four provides 16 dB of attenuation at the second harmonic of the center frequency.

The most important aspect of the bandpass filter is its phase response. From a physics standpoint, a phase accuracy of $\pm 10°$ is acceptable. A filter constrained to cover a range of frequencies should therefore phase shift all frequencies within that range less than 10°. If the filter center frequencies can be set very accurately, the phase shift of the signal is due only to the difference

between the signal frequency and the center frequency. Using 10° for $\Delta\phi$ and substituting into Eq. (2-5) gives

$$\Delta\omega_1 = \frac{0.175\omega_c}{Q} \quad . \tag{2-6}$$

This relationship specifies how closely the filters should be spaced. Center frequencies may be separated by no more than $\Delta\omega_1$. For a Q of four, the separation may be no more than 4.4%. That is, for a given ω_c the next higher center frequency must be no greater than $1.044\omega_c$. From this requirement, it is apparent that the filter will need a large number of adjustment points if it is to cover several octaves.

In order to meet all the constraints, a digitally controlled bandpass filter with discrete tuning points was used. The basic building block of the filter is an active second-order bandpass filter. This is shown in Figure 2.6. Tuning is achieved by switching the value of R_2. A single filter of this type can cover half an octave with limited variation of Q, so a set of filters is needed for use over a wider range. By judicious choice of the center frequencies covered, the circuitry controlling the filters can be fairly simple and the total filter can have an easily constructed, repetitive structure.

In terms of the component labels used in Figure 2.6, the transfer function for the second-order active bandpass filter can be written as

$$A(s) = \frac{-s/R_1C_4}{s^2 + \left(\frac{1}{R_5}\right)\left(\frac{1}{C_3} + \frac{1}{C_4}\right)s + \left(\frac{1}{R_5C_3C_4}\right)\left(\frac{1}{R_1} + \frac{1}{R_2}\right)} , \tag{2-7}$$

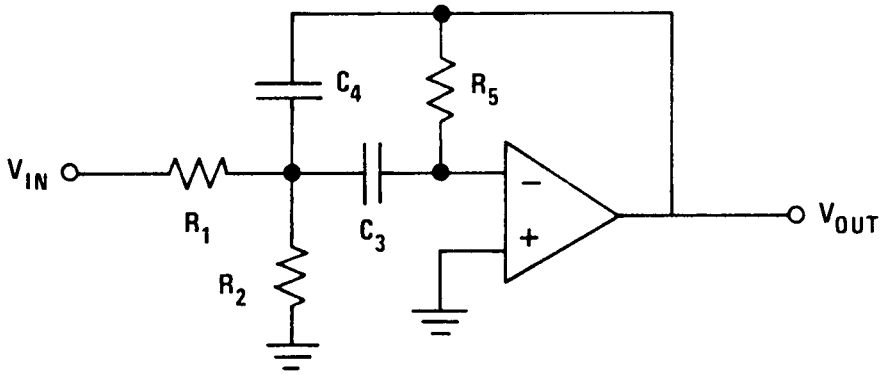

Figure 2.6. Second-order bandpass active filter.

assuming an ideal operational amplifier. From Eq. (2-7), some useful relationships can be derived. If the inverse of the center frequency, the center period, is denoted by T_c, then it can be shown that

$$T_c = 2\pi \sqrt{(R_1 \| R_2) R_5 C_3 C_4} \tag{2-8}$$

and that

$$Q = \frac{1}{C_3 + C_4} \sqrt{\frac{R_5 C_3 C_4}{R_1 \| R_2}} \ . \tag{2-9}$$

The gain at the center frequency is obtained by setting s equal to $j\omega_c$ in Eq. (2-7) and is then given by

$$H_c = \frac{R_5/R_1}{C_3/C_4 + 1} \ . \tag{2-10}$$

These three equations specify the quantities of interest in terms of the circuit parameters.

The self-adjusting bandpass filter system actually contains eight of the filter pairs shown in Figure 2.7. Each pair covers one octave, and the entire filter therefore covers eight octaves—a range of 250 Hz to 60 kHz. Each half of a filter pair can be adjusted to sixteen different center frequencies by switching one of sixteen values of R_2 in place. The nominal filter Q is four, the nominal gain at the center frequency is two, and the maximum separation of

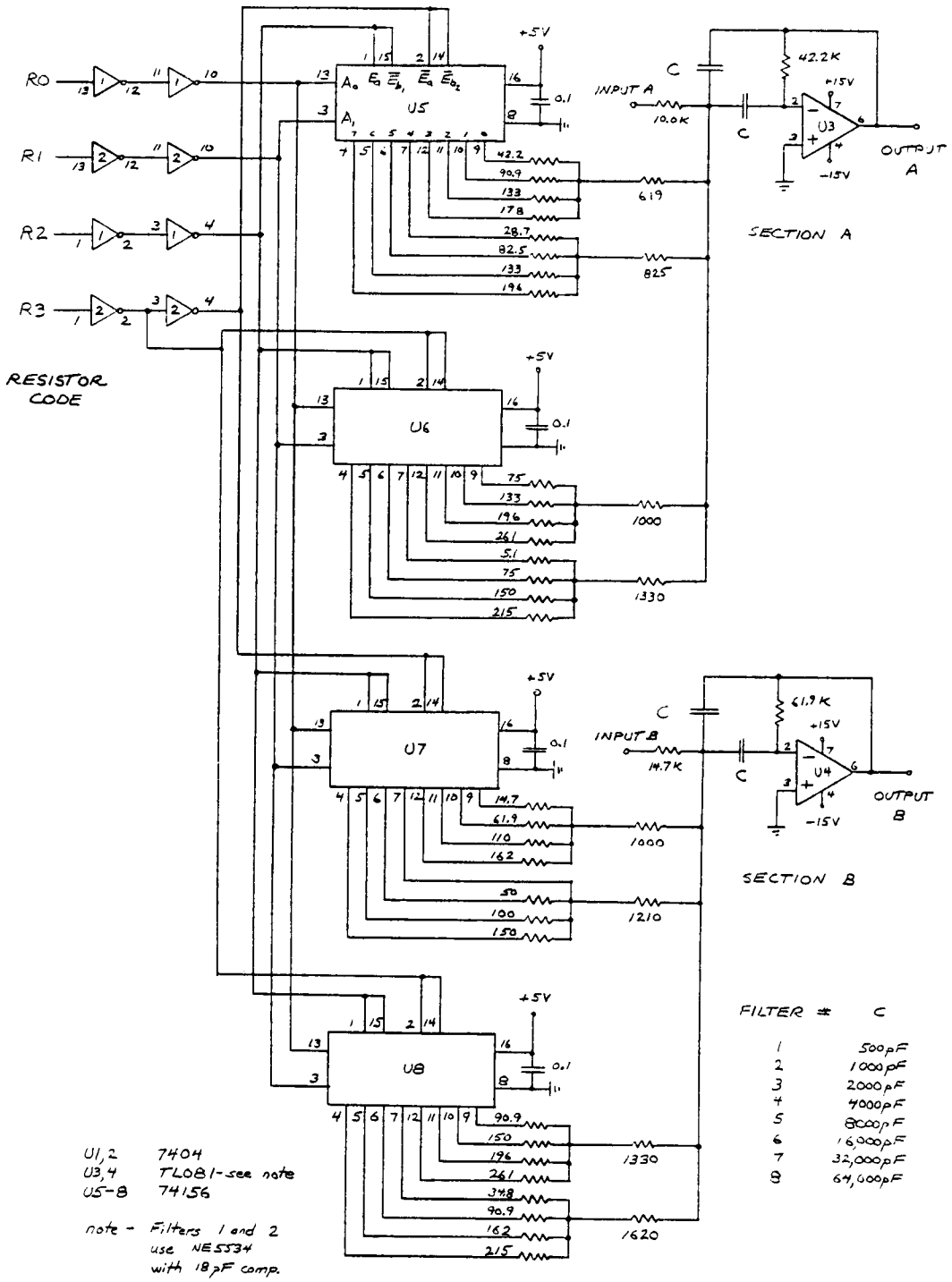

Figure 2.7. Digitally adjustable bandpass filter circuit.

center frequencies is 3.1%, which is within the limit for acceptable phase shift. The center frequencies can be in error by no more than half of the difference of the theoretical maximum separation of center frequencies and the actual separation (0.7%).

Because of the great number of resistors required to construct eight pairs of filters, it is obvious that the same values should be used for each pair. Examination of Eq. (2-8) reveals that the center period can be doubled by doubling both capacitances. Thus, if suitable resistances can be found for one octave, the same values can be used for all the filter pairs.

A computer program that solves for values of R_2 in terms of the other circuit parameters and T_c was written. A listing of the program and an example of its output are given in Appendix A. The values of T_c required will be discussed in Section 2.4.3. For simplicity, it was decided that both capacitors would have the same value. From Eq. (2-10), it can be seen that if C_4 equals C_3 and a gain of two is required, then R_5 must be four times as large as R_1. With these constraints, the computer program was used in an iterative fashion to determine practical component values resulting in suitable values of Q.

A practical limit on the accuracy of the center frequencies is 1%, which is not quite as small as needed but should introduce only a few more degrees of maximum error. The sheer number of center frequencies makes individual adjustments impractical. To achieve 1% accuracy, the capacitors used were hand picked, and 1% tolerance resistors were used. In order to have actual resistor values very nearly the same as the calculated values without using trimmers, a "tree" arrangement was used. Essentially, this arrangement allows two resistors in series to be used to achieve the desired value but increases the

number of resistors required by only 25% and not 100%. A resistor "tree" is shown in Figure 2.8. The actual resistor value allows for the 15-Ω output impedance of the transistor switch.

2.4.3 Bandpass Filter System Control

The period of the sine wave is measured by counting 1-MHz clock pulses with a 16-bit binary counter that is enabled for four sine-wave periods as shown in Figure 2.9. By discarding the two least significant bits, the average period in microseconds is obtained. Because the counter output is binary, the logical divisions between octaves are periods that are powers of two: 16 μs, 32 μs, etc. Thus, the most significant non-zero bit is used to select the pair of filters that covers the corresponding octave. The next lower-order bit is used to select the A or B half of the pair, and the next four lower-order bits are used to fine tune the filter by selecting a value of R_2. The value of these four bits is called the *resistor code*, and it should be noted that a different set of bits comprises the resistor code for each filter pair. This use of the period counter output to control the filter adjustment dictates that T_c is the measured period accurate to 6 bits. Table 2.1 lists the range of periods covered for each filter, and Table 2.2 lists the period counter bits used as the resistor code. It is worth noting that, although the spacing between filter adjustment points is a constant for a single octave, the spacing increases with the octave. This drastically reduces the number of filter adjustment points required compared to a fixed spacing but still allows the filter spacing to stay within the maximum separation required for limiting the phase shift.

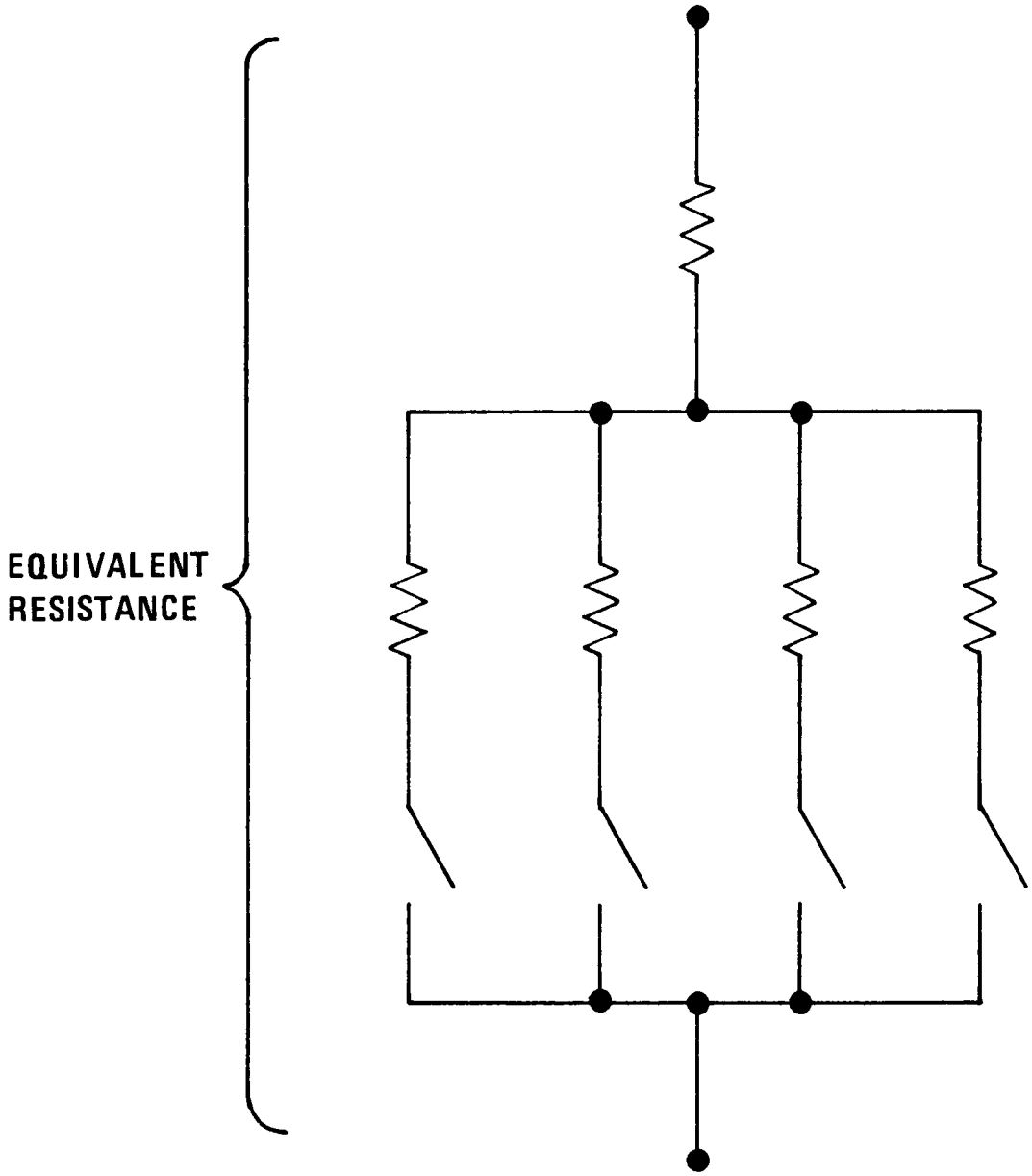

Figure 2.8. Resistor tree.

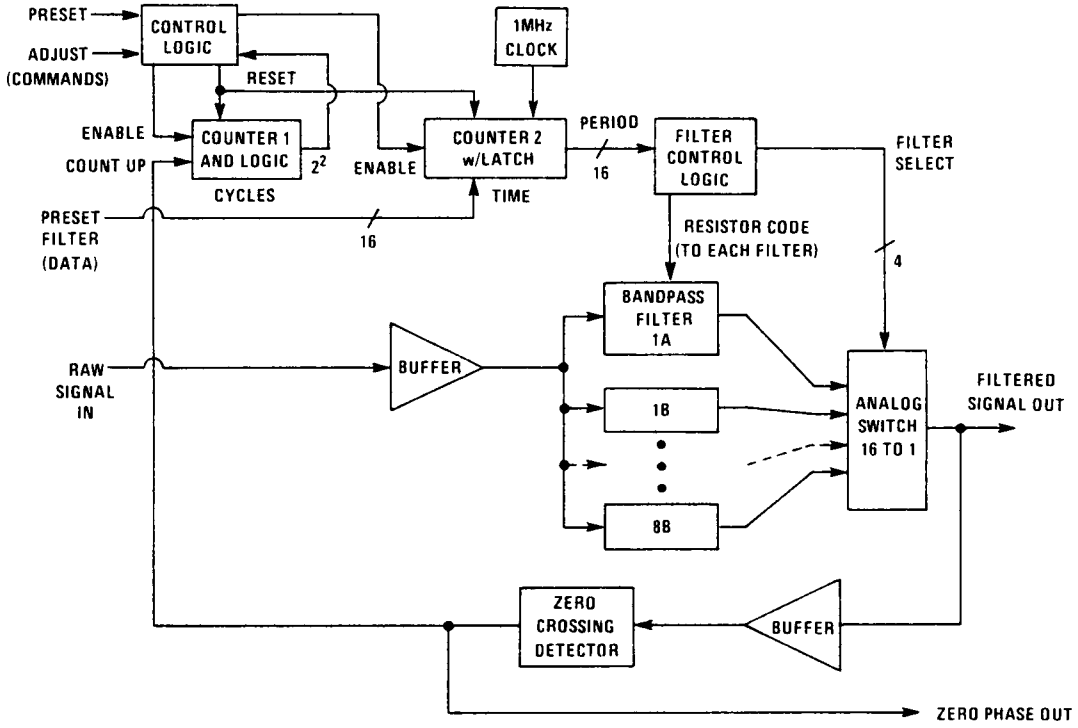

Figure 2.9. Self-adjusting bandpass filter system block diagram.

Table 2.1. Filter select bit assignment

Filter number	Filter code	Sine period (μs)	Filter spacing (μs)	Period counter bits for filter select (A_{nn})								
				13	12	11	10	9	8	7	6	5
1A	0000	16-24	0.50	0	0	0	0	0	0	0	1	0
1B	0001	24-32	0.50	0	0	0	0	0	0	0	1	1
2A	0010	32-48	1.00	0	0	0	0	0	0	1	0	X[a]
2B	0011	48-64	1.00	0	0	0	0	0	0	1	1	X
3A	0100	64-96	2.00	0	0	0	0	0	1	0	X	X
3B	0101	96-128	2.00	0	0	0	0	0	1	1	X	X
4A	0110	128-192	4.00	0	0	0	0	1	0	X	X	X
4B	0111	192-256	4.00	0	0	0	0	1	1	X	X	X
5A	1000	256-384	8.00	0	0	0	1	0	X	X	X	X
5B	1001	384-512	8.00	0	0	0	1	1	X	X	X	X
6A	1010	512-768	16.00	0	0	1	0	X	X	X	X	X
6B	1011	768-1024	16.00	0	0	1	1	X	X	X	X	X
7A	1100	1024-1536	32.00	0	1	0	X	X	X	X	X	X
7B	1101	1536-2048	32.00	0	1	1	X	X	X	X	X	X
8A	1110	2048-3072	64.00	1	0	X	X	X	X	X	X	X
8B	1111	3072-4096	64.00	1	1	X	X	X	X	X	X	X

[a]X indicates a "don't care" condition.

Table 2.2. Resistor code to period counter connections

Filter number	Resistor bit (R_{nn})[a]			
	R_3	R_2	R_1	R_0
1	A_4	A_3	A_2	A_1
2	A_5	A_4	A_3	A_2
3	A_6	A_5	A_4	A_3
4	A_7	A_6	A_5	A_4
5	A_8	A_7	A_6	A_5
6	A_9	A_8	A_7	A_6
7	A_{10}	A_9	A_8	A_7
8	A_{11}	A_{10}	A_9	A_8

[a]Connection to period counter bit (A_{mm}).

The filter control logic (Figure 2.10) allows counter 2 to be preset and its output latched before measuring the period. This ensures that the same filter is used throughout the measurement. The output of the latch passes into the filter output selector (Figure 2.11) that produces a 4-bit code referred to as the *filter code*. The filter code controls a sixteen-to-one analog multiplexer (U1 and U2) whose inputs are the outputs of each filter section. The multiplexer output is the bandpassed sine wave. A zero-crossing detector (U7) converts the sine wave into a square wave, which is fed back to the logic controlling the period counter. The first rising edge of the square wave occurring after an enable starts the period counter (counter 2), and the fifth rising edge stops the period counter and latches the new count.

The filter may be preset to any allowable frequency through the computer or to one of eight frequencies with the manual control shown in Figure 2.12.

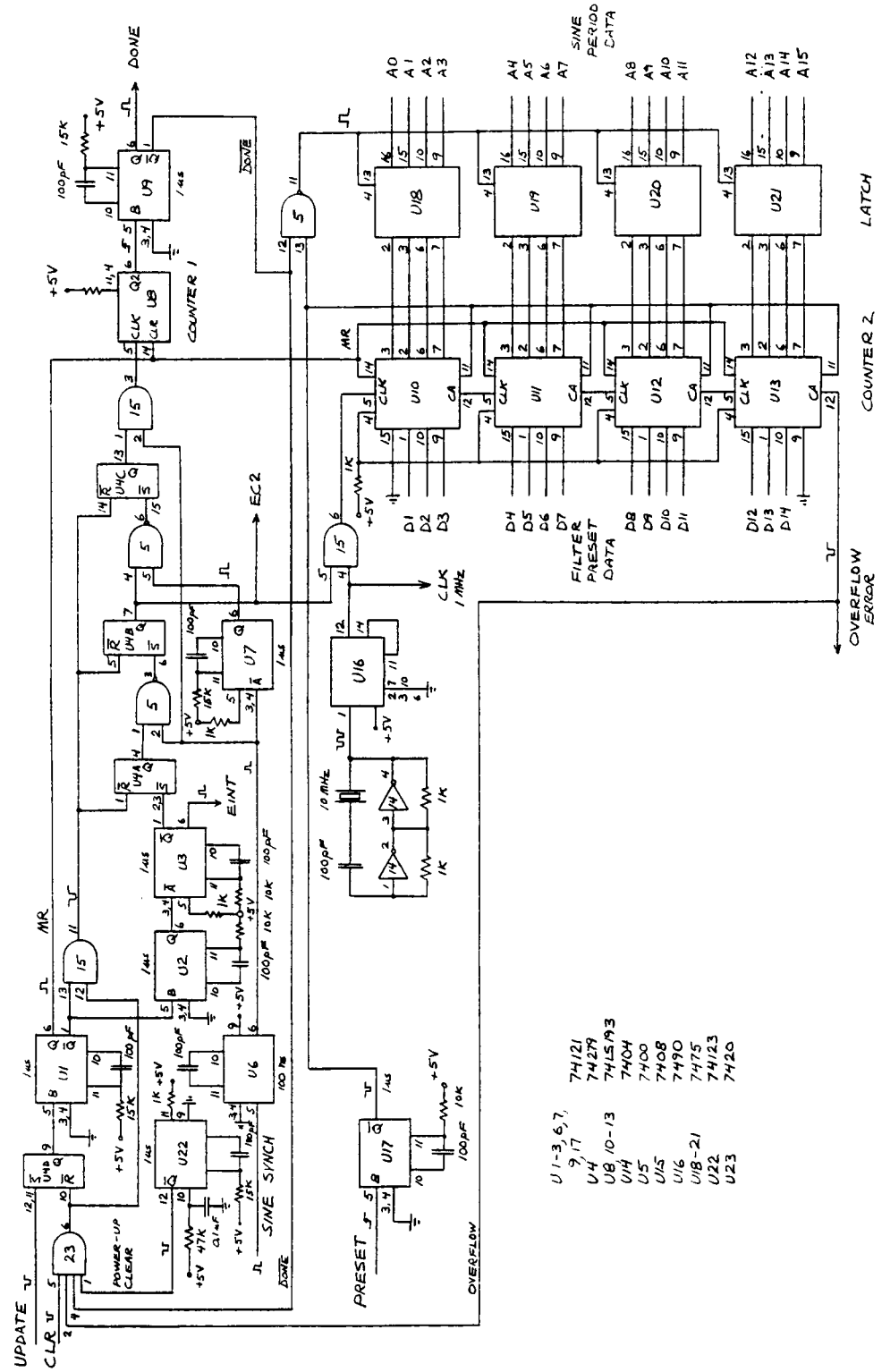

Figure 2.10. Filter control and sine period counter circuit.

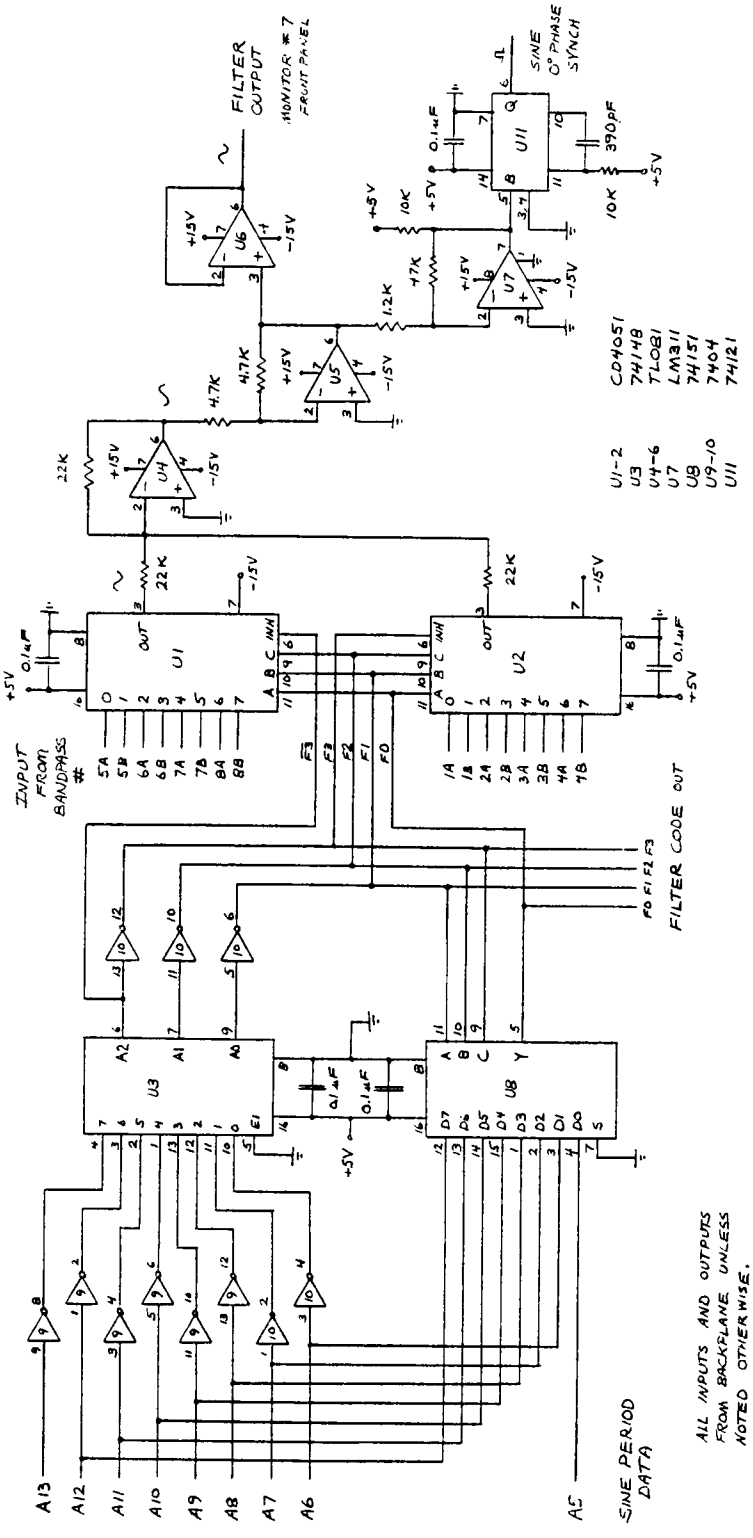

Figure 2.11. Filter output selector circuit.

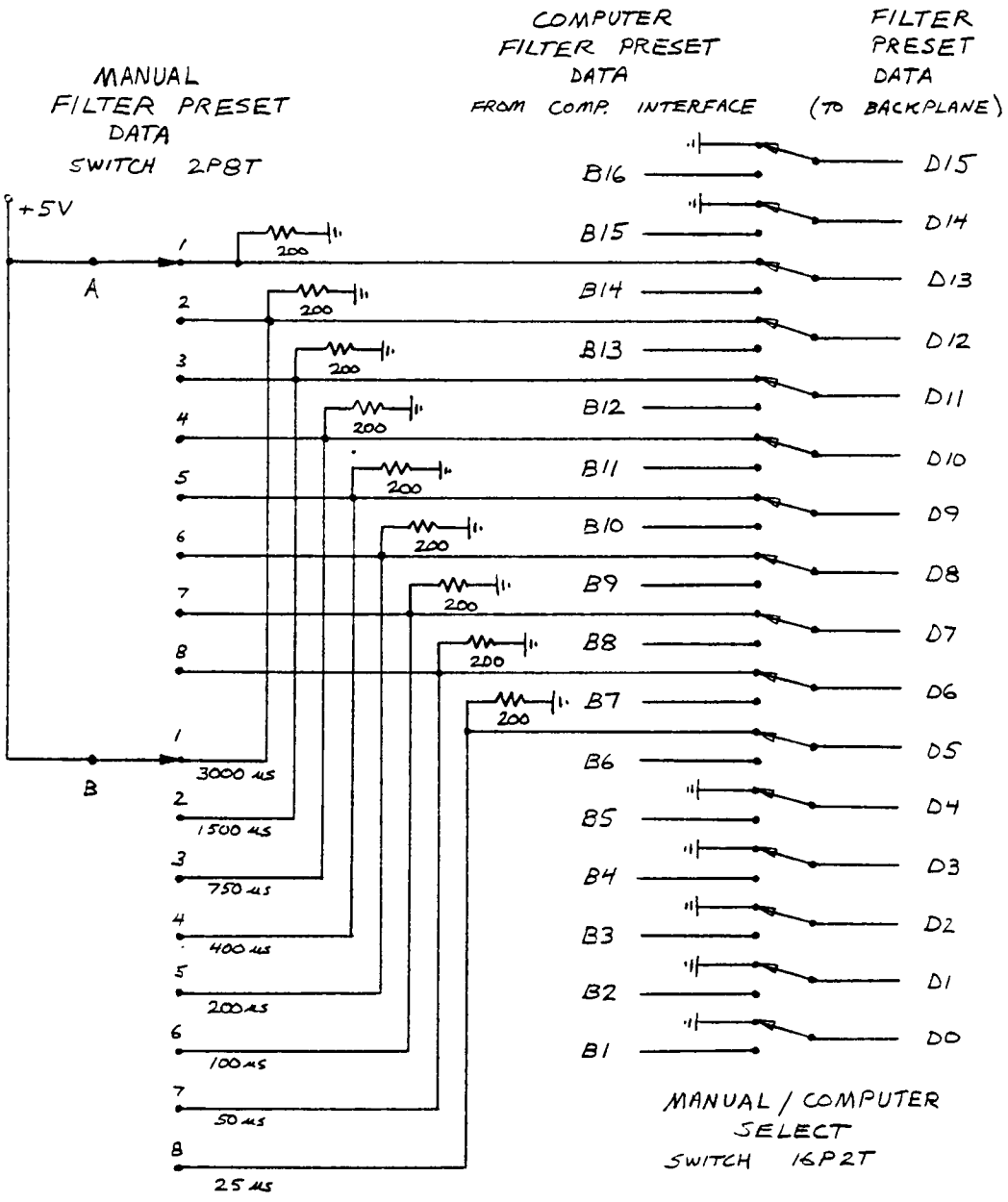

Figure 2.12. Filter preset data source selection.

The manual control uses switch logic to produce preset period data for the filter. All of the preset lines are held low, except for two consecutively numbered lines selected by a two-pole, eight-throw switch. The highest-order bit selects a filter octave, and the other bit forces the B filter half to be used. Thus, the manual control allows the filter to be preset to the middle of any octave.

2.5 Sine Phase Comparator

The sine phase comparator circuit (Figure 2.13) produces synchronization pulses at the desired phase of a sine wave. This circuit works in much the same way as the sawtooth phase comparator. Two ramp generators are used for timing consecutive parts of the sine wave, and the second is compared to a fraction of the first to produce the synchronization pulse; however, there is one notable difference from the sawtooth phase comparator. Because of the wide range of sine periods that must be covered, the reference voltage for the ramp generators is made to increase as the sine period decreases. This prevents the voltage corresponding to the sine period from becoming exceedingly small.

The filter code is latched (U1) at the beginning of a sine synchronization, and the three most significant bits are used to determine the reference voltage for the ramp generators. The upper three bits of the filter code are related to the sine period by

$$p = f p_1 2^n \ , \tag{2-11}$$

where p is the sine period, f is a factor ranging from 0.5 to 1, p_1 is a constant with a value of 32 μs, and n is the value of the upper 3 bits of the filter code. A

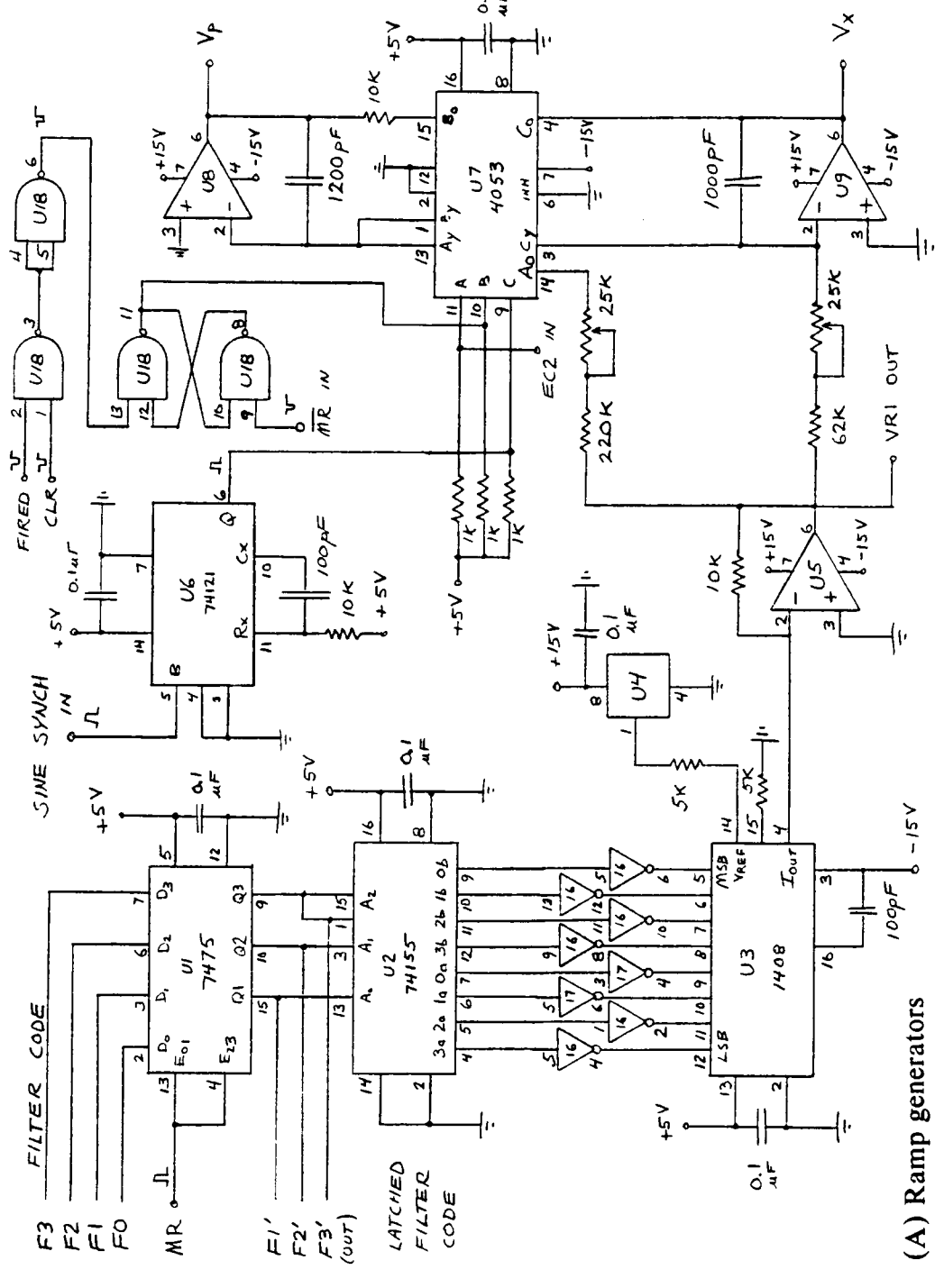

(A) Ramp generators

Figure 2.13. Sine phase comparator circuit.

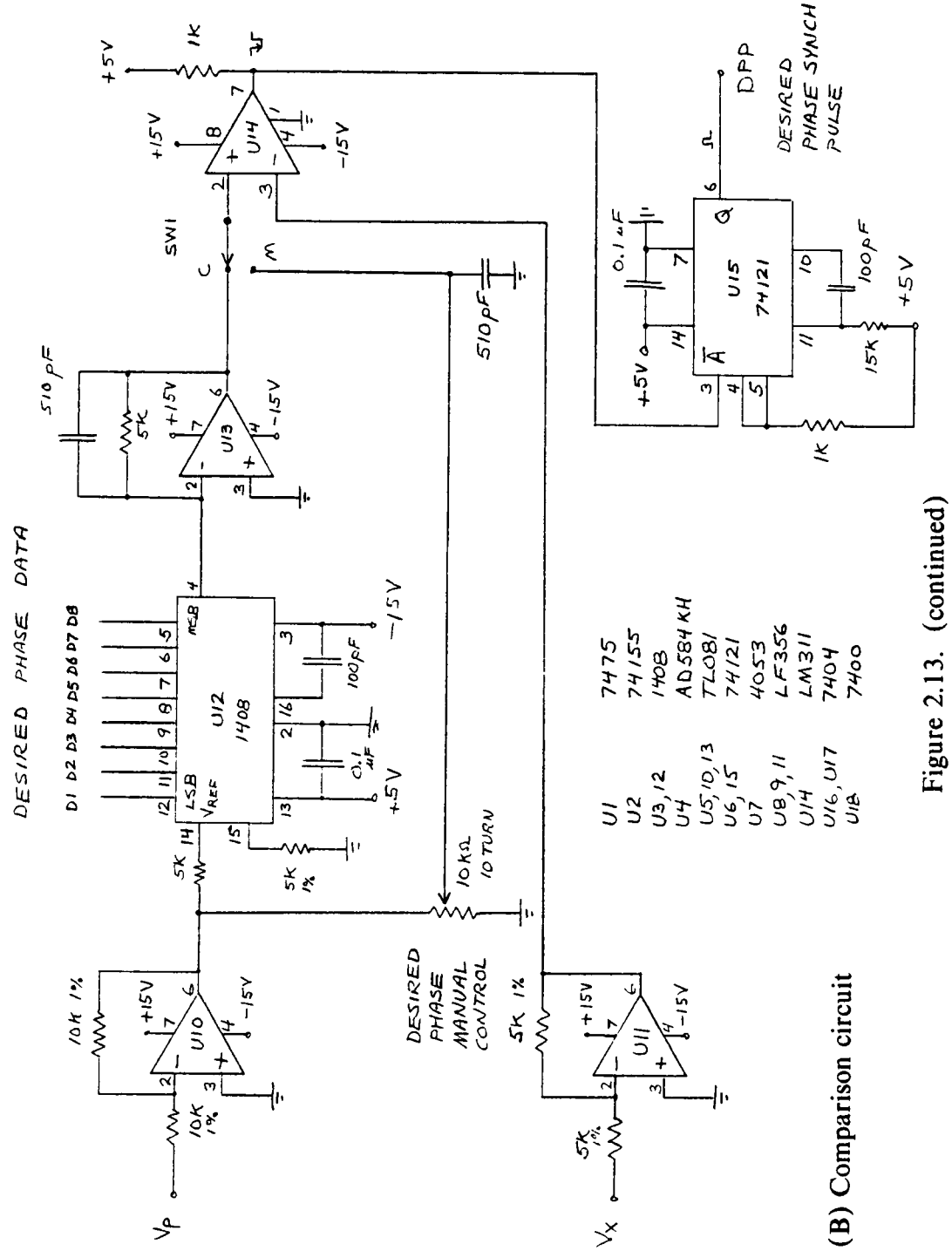

(B) Comparison circuit

Figure 2.13. (continued)

filter pair covers an octave with periods determined by allowing f to range from 0.5 to 1. Thus f is the ratio of a period to the maximum period of the same octave. From Eq. (2-11), it can be seen that n specifies an octave. This information is used to adjust the reference voltage by decoding the 3-bit code into eight lines (wth U2) and using these eight lines to control a DAC (U3). The decoding and control is done in such a way that one bit of the DAC is turned on at a time, and the voltage output of the DAC, V_R , is given by

$$V_R = V_{\text{ref}}/2^n \ , \tag{2-12}$$

where V_{ref} is a fixed reference voltage. Recalling the equation governing a ramp generator, Eq. (2-1), and substituting p for t gives

$$V_p = V_R p/RC \ , \tag{2-13}$$

where V_p is the output voltage corresponding to the period. Substituting Eq. (2-11) for p and Eq. (2-12) for V_R into Eq. (2-13) gives

$$V_p = f p_1 V_{\text{ref}}/RC \ . \tag{2-14}$$

Note that V_p does not depend upon the octave. Since p_1, V_{ref}, R and C are constants, V_p varies as f and f may vary at most by a factor of 2.

To minimize any timing errors due to noise added to the ramp or due to the small differential voltage needed to trigger the comparator, the ramp should reach as large a voltage as is reasonable. It should be noted that the reference

voltage for the ramp is determined before the period is measured, and an allowance is then made for the case in which the period is longer than expected and the ramp reaches a higher voltage than expected. If V_{ref} is 10.0 V and V_p is limited to 5.0 V when the period is the maximum value for an octave (f = 1.0), then the product RC can be solved by using Eq. (2-14). C should be small so that it can be discharged rapidly, but it should be as large as possible so that the charging current is large compared to the operational amplifier bias current.

The first ramp generator (U8) measures the average period over four cycles. The integrating capacitor is discharged until the digital period counter is reset. When the counter is enabled, the ramp begins and holds when the period counter finishes. Thus the ramp generator is an analog equivalent of the digital period counter. The advantage of the analog output is that division can be performed with a simple potentiometer.

The second ramp generator (U9) measures the period of each cycle. The integrating capacitor is discharged every time the sine wave passes through zero phase. Because of the finite time required to discharge the capacitor, approximately 1 μs, some error is introduced to the phase synchronization at the highest frequencies covered by the synchronization instrument.

The output of the first ramp generator is the input to a DAC (U2) if computer control is used or to a calibrated potentiometer if manual control is used. Both the DAC and the potentiometer are calibrated so that full scale corresponds to 360° of phase shift. Either way, a fraction of the voltage corresponding to the sine period is compared to the output of the second ramp. When the output of the second ramp exceeds the fraction of the first ramp, the

comparator (U14) changes state and triggers a one-shot (U15). The pulse produced by the one-shot is the desired phase pulse (DPP).

2.6 Sine Flashlamp Advance Calculator

The sine flashlamp advance calculator circuit, shown in Figure 2.14, uses the desired phase pulses and sine period information to calculate the appropriate time to fire the flashlamps in advance of the desired sine phase. The circuit operates in one of two modes, depending upon the period of the sine wave. For a sine wave with a period less than 128 μs, the circuit operates in the fast mode. For a longer period sine wave, the slow mode is used. This division is necessary due to the length of laser Q-switch window (200 μs). If the sine period is less than the Q-switch window, the flashlamps can be fired without regard for the sine phase, because the sine wave must pass through the desired phase sometime during the Q-switch window. If the sine period is longer than the Q-switch window, the flashlamps must be fired at a phase of the sine wave such that the desired phase will occur during the Q-switch window.

The mode of operation is determined on the basis of the latched filter code. If the filter code is less than three, the fast mode is enabled by U17. Note that since the mode is determined before the sine period is measured, the fast mode may be used for a period somewhat greater than 128 μs, or the slow mode may be used for a period somewhat shorter than 128 μs.

2.6.1 The Fast Mode

In the fast mode, the flashlamp advance calculator circuit fires the flashlamps when the sine period measurement begins. Because the maximum period

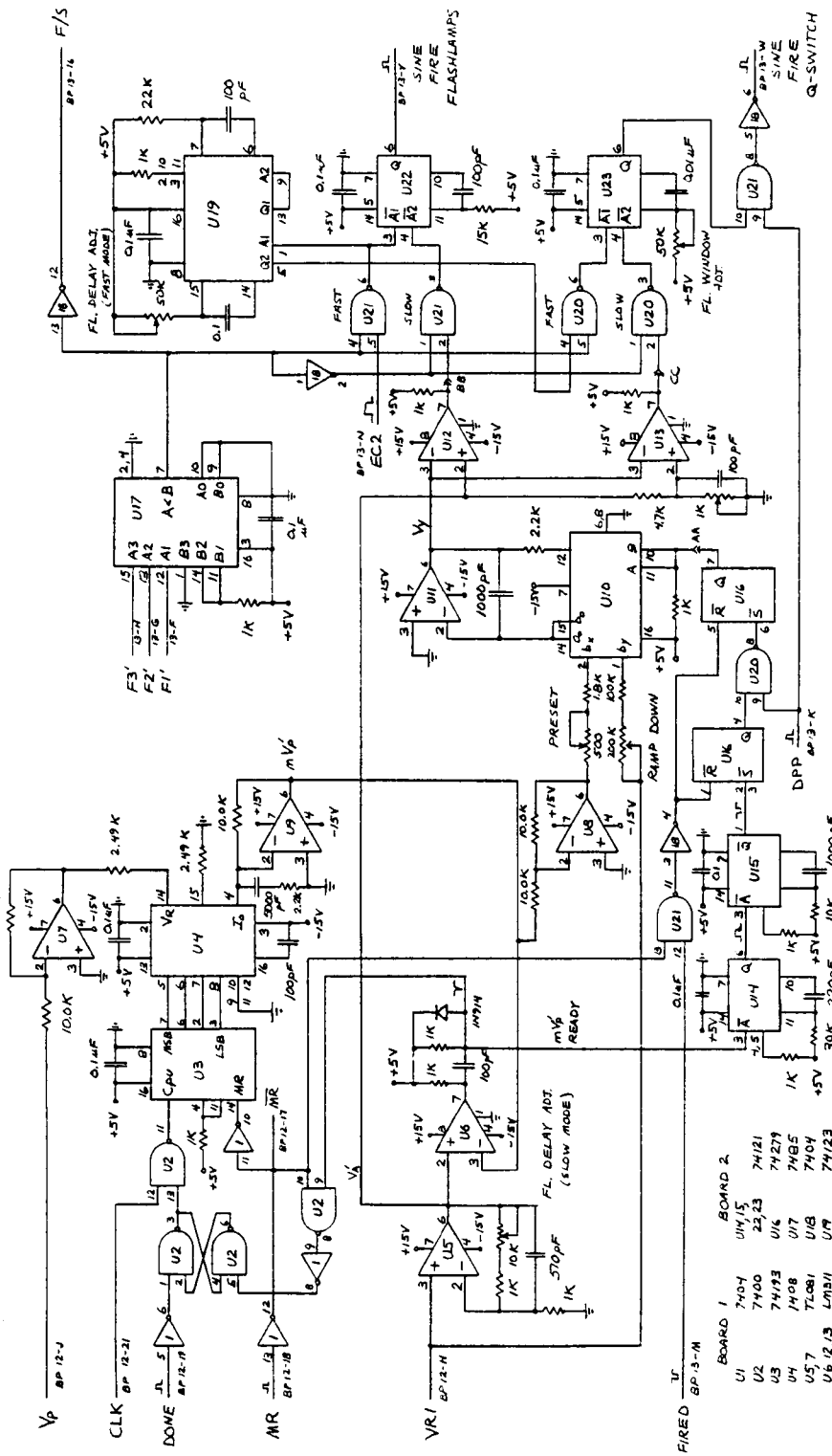

Figure 2.14. Sine flashlamp advance calculator circuit.

is 128 μs for this mode, the measurement requires a maximum of 512 μs. This measurement time is less than the flashlamp delay time, so the correct filter is switched into place and the sine phase comparator is producing desired phase pulses before the laser is ready to be Q-switched. The first desired phase pulse after the flashlamp delay becomes the fire Q-switch pulse.

2.6.2 The Slow Mode

The slow mode circuit produces fire flashlamps and fire Q-switch pulses. First the circuit determines the least integer multiple of the sine period that is greater than the flashlamp delay time. A timer is preset with this time, and the countdown begins with the next desired phase pulse. Because the timer initially contains an integer number of sine periods, it should reach zero in coincidence with a desired phase pulse. When the time remaining is equal to the flashlamp delay, the circuit fires the flashlamps. Just before the timer reaches zero, the circuit enables the next desired phase pulse to produce the Q-switch pulse. Thus the laser is fired properly on the correct phase.

Timing is accomplished by a combination of analog and digital circuits, allowing the necessary calculations to be made rapidly with minimal circuitry. The circuit uses the reference voltage and the analog representation of the sine period that were produced by the sine phase comparator circuit. The reference voltage is scaled to produce a voltage corresponding to the flashlamp delay, and the period voltage is multiplied and preset into a integrator. The reference voltage is used to discharge the integrator, and comparators are used to produce triggers when the ramp reaches a voltage corresponding to the flashlamp delay and when the ramp nears zero.

The reference voltage V_R corresponds to a fixed time, no matter what its value. From Eq. (2-11), it can be seen that for the maximum period of a particular octave, the value of the factor f is one, and the maximum period is given by

$$p_{max} = p_1 2^n \quad . \tag{2-15}$$

The voltage corresponding to p_{max} is 5 V and p_1 is 32 μs; therefore, V_{ref}, which is 10 V, corresponds to 64 μs $\times$ 2^n. Because Eq. (2-12) gives $V_R \times 2^n$ equals V_{ref}, it follows that V_R corresponds to 64 μs, for any octave n. Thus a scaled-up version of V_R can be used to represent the flashlamp delay time. Scaling is accomplished by U5.

The multiplier circuit consists of a counter (U3), a DAC (U4), a comparator (U9), and control logic (U2). The period voltage is the reference input for the DAC, which is controlled by the output of the counter. Initially the counter and DAC outputs are zero, but the DONE pulse enables the clock input to the counter and counting begins. The DAC output is compared to the flashlamp delay voltage, V_A', and when it exceeds V_A', the clock is disabled and the circuit produces a pulse that signifies that the DAC output is ready.

The integrator is preset to the scaled multiple of the period voltage by switching in resistors to connect the operational amplifier (U11) as an inverting amplifier. The integrating capacitor slows the response of this amplifier, so a delay is provided in the logic to allow the amplifier to reach the preset value before a desired phase pulse can start to discharge the integrator. The preset

resistors are switched out at the same time that the discharge resistor is switched in.

2.7 Operation Control Logic

The operation control logic has two main functions: it controls the timing of the signals that start the action of the synchronization circuits, and it controls the timing and source of the fire signals. The action taken by this circuit depends upon the operation code selected. For code one, the operation control logic directs a sawtooth synchronization. For code two, a sawtooth and sine synchronization is performed, and for code three, a sine synchronization is performed. For code zero, the laser is fired immediately. This is referred to as the *transparent mode* since the synchronization instrument merely passes the fire laser command.

The operation code may be set either manually or through the computer interface. A front-panel-mounted toggle switch determines the source of the operation code. The circuitry selecting the operation code is shown as Figure 2.15. Although 4 bits are used by the computer interface and manual control, the operation control logic circuit uses only the three lower-order bits. This arrangement provides eight possible operation codes, of which four are spares.

To start the synchronization circuits, the operation control logic shown in Figure 2.16 directs the GO pulse to produce an update filter pulse or a sawtooth phase synchronization enable. The operation code controls two multiplexers. A pulse from the output of the first multiplexer (U3) sets a flip-flop whose output is the sawtooth enable. A pulse from the output of the second multiplexer (U4) is the update filter pulse. For sawtooth synchronization, the

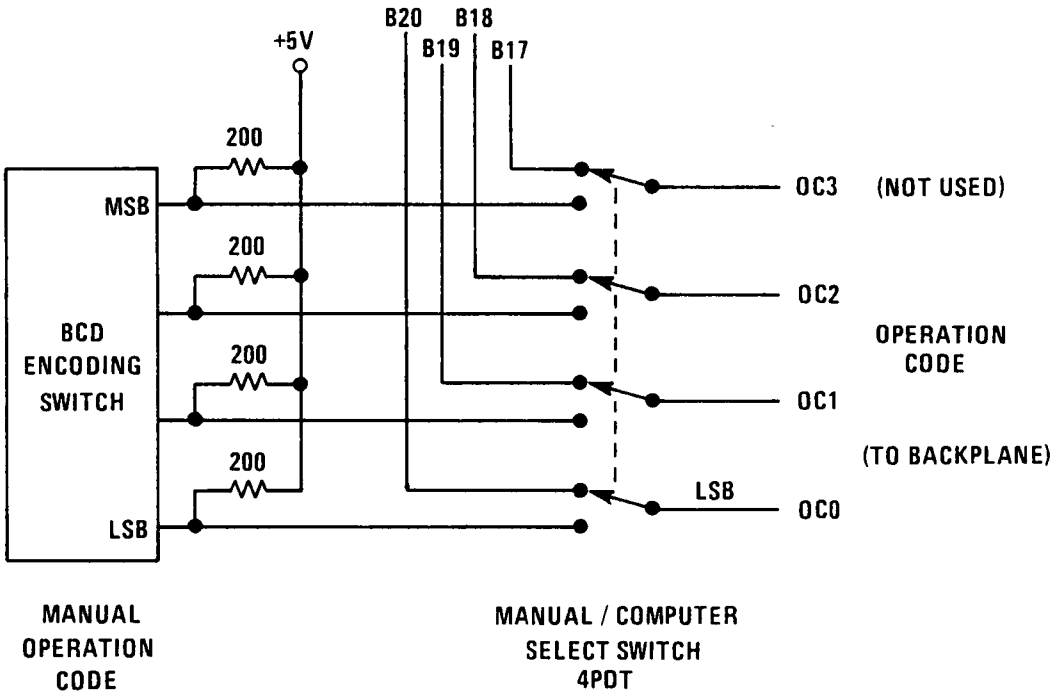

Figure 2.15. Operation code selection circuit.

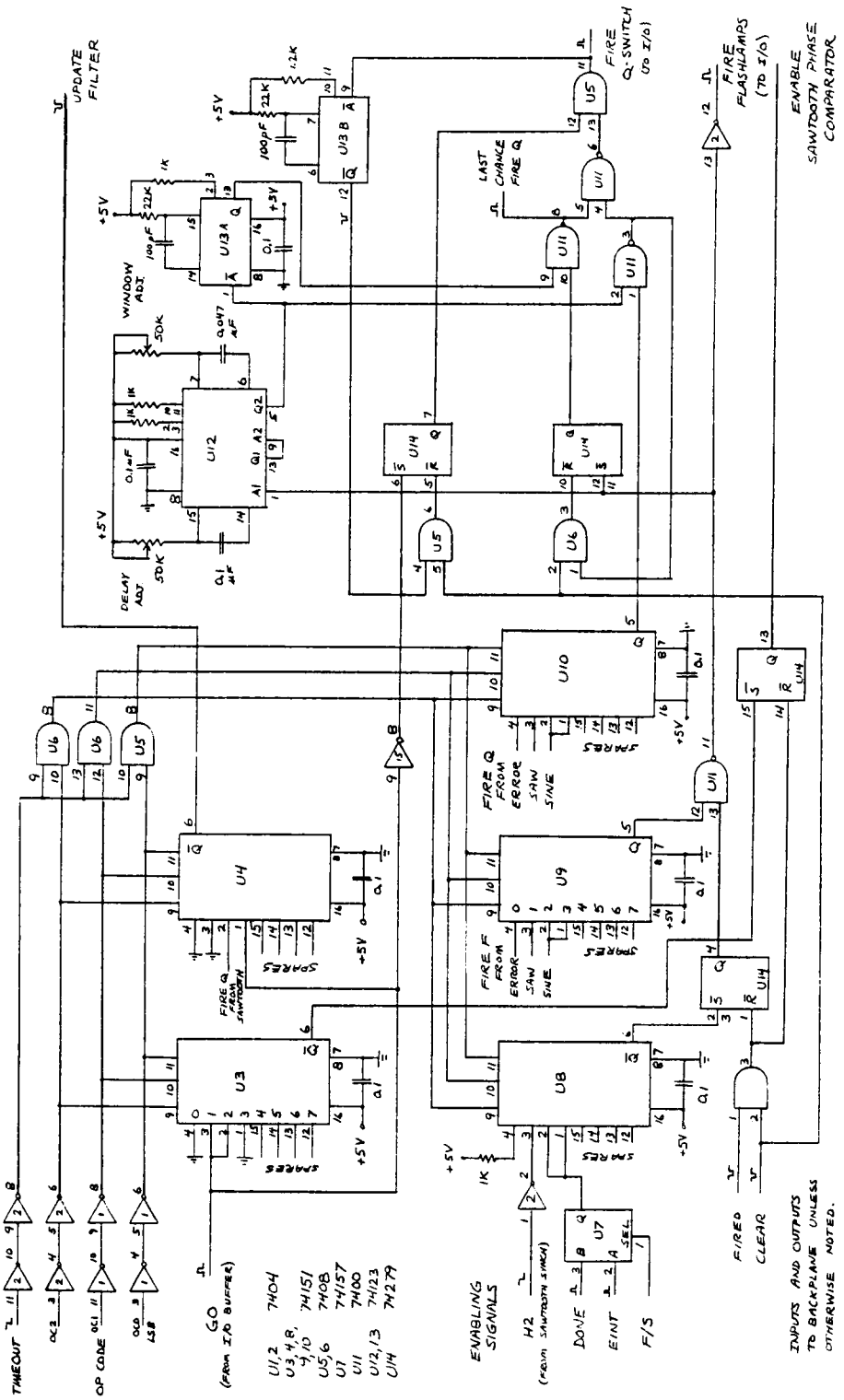

Figure 2.16. Operation control logic circuit.

GO pulse immediately produces a sawtooth enable. For sawtooth and sine synchronization, the GO pulse immediately produces a sawtooth enable, and the fire Q-switch pulse from the sawtooth synchronization circuits then produces an update filter pulse.

Another pair of multiplexers (U9 and U10) allows the operation code to control the source of the fire flashlamp and fire Q-switch pulses. Before the fire flashlamp pulse is output, however, it must be enabled. The enabling signal is chosen on the basis of the operation code by a third multiplexer (U8). A pulse passing through this multiplexer sets a flip-flop whose output enables the fire flashlamp output. This is done to minimize the probability of a spurious fire pulse due to the initialization of the synchronization circuits or noise. For sawtooth synchronization, the enabling signal is H2, signifying that the sawtooth period measurement is complete and synchronization is proceeding. For sawtooth and sine synchronization or sine only, the enabling signal depends upon whether the sine synchronization circuits are operating in the fast or slow mode. For the fast mode, the filter internal enable (EINT) is used and the flashlamps are enabled immediately after the GO pulse. For the slow mode, the flashlamps cannot be fired before the filter has been updated, so the filter DONE pulse is used. For the transparent mode, the flashlamps are always enabled.

The fire Q-switch output must also be enabled. The fire flashlamp pulse triggers a dual one-shot (U12) that produces a pulse after the minimum flashlamp delay (750 μs). This pulse is the Q-switch window (200 μs) and is one

signal needed to enable the Q-switch output. The other is the output of a flip-flop set by the GO signal. The fire Q-switch pulse resets this flip-flop and disables further fire Q-switch pulses. If the synchronization circuits fail to produce a Q-switch pulse within the window, then the operation control logic produces one at the last possible moment. The trailing edge of the Q-switch window triggers a one-shot (U13A), producing a fire Q-switch pulse.

If the operation control logic receives a TIMEOUT signal, the operation code controlling the fire flashlamp enable multiplexer and the fire flashlamp and fire Q-switch multiplexers is forced to zero. The TIMEOUT signal means that the synchronization circuits failed to produce a fire flashlamp pulse in the allotted time and that the error timeout logic has taken control. By forcing the operation code to zero, the fire flashlamp and fire Q-switch pulses from the error timeout logic are enabled. In this case, the laser is fired as soon as possible.

2.8 Error Timeout Logic

The error timeout logic circuit is used to fire the flashlamps if the synchronization circuits fail to fire them in a reasonable length of time. This feature is needed because it is important to ensure that the laser is fired once it is charged and to obtain Thomson scattering data during each shot if possible. If the synchronization circuits fail, the error timeout logic produces the TIMEOUT signal, takes control away from the synchronization circuits and produces fire flashlamp and fire Q-switch triggers. Just what constitutes a reasonable delay before assuming synchronization failure depends upon the type of synchronization that is attempted.

For synchronization with a sawtooth with or without a sine wave (operation code one or two), the timeout delay is 140 ms, which is approximately five times the maximum sawtooth period. In all cases, fewer than five sawteeth should be required for synchronization. Up to one period may elapse before timing begins; two periods are required for timing, and up to two more are needed to wait on the correct phase.

For synchronizing with a sine wave (operation code 3), the timeout delay depends upon whether the synchronization occurs in the fast or the slow mode. In the fast mode, the flashlamps should be fired within one cycle after the update filter command. Because the maximum period for this mode is 128 μs, the delay used is 140 μs. In the slow mode, at least four sine periods pass before the flashlamps should fire. To allow for the maximum sine period, the timeout delay is adjusted to 30 ms.

If the synchronization instrument is used in the transparent mode (operation code 0), the error timeout logic produces a fire flashlamp pulse immediately and a fire Q-switch pulse after the flashlamp delay. The TIMEOUT signal is also produced, but it has no meaning in this case.

As shown in Figure 2.17, the GO signal triggers a set of delay one-shots (U6A, U6B, and U7A) and sets a flip-flop whose output enables a multiplexer (U4). The multiplexer is controlled by the operation code, and its inputs are the outputs of one-shots (U7B and U8) triggered by the delay one-shots. When a pulse passes through the multiplexer, it becomes the fire flashlamp trigger. It also sets a flip-flop whose output is the TIMEOUT line and produces the fire Q-switch trigger after an 800-μs delay due to U5. The fired signal or the clear command resets the error timeout circuit and disables all of its outputs.

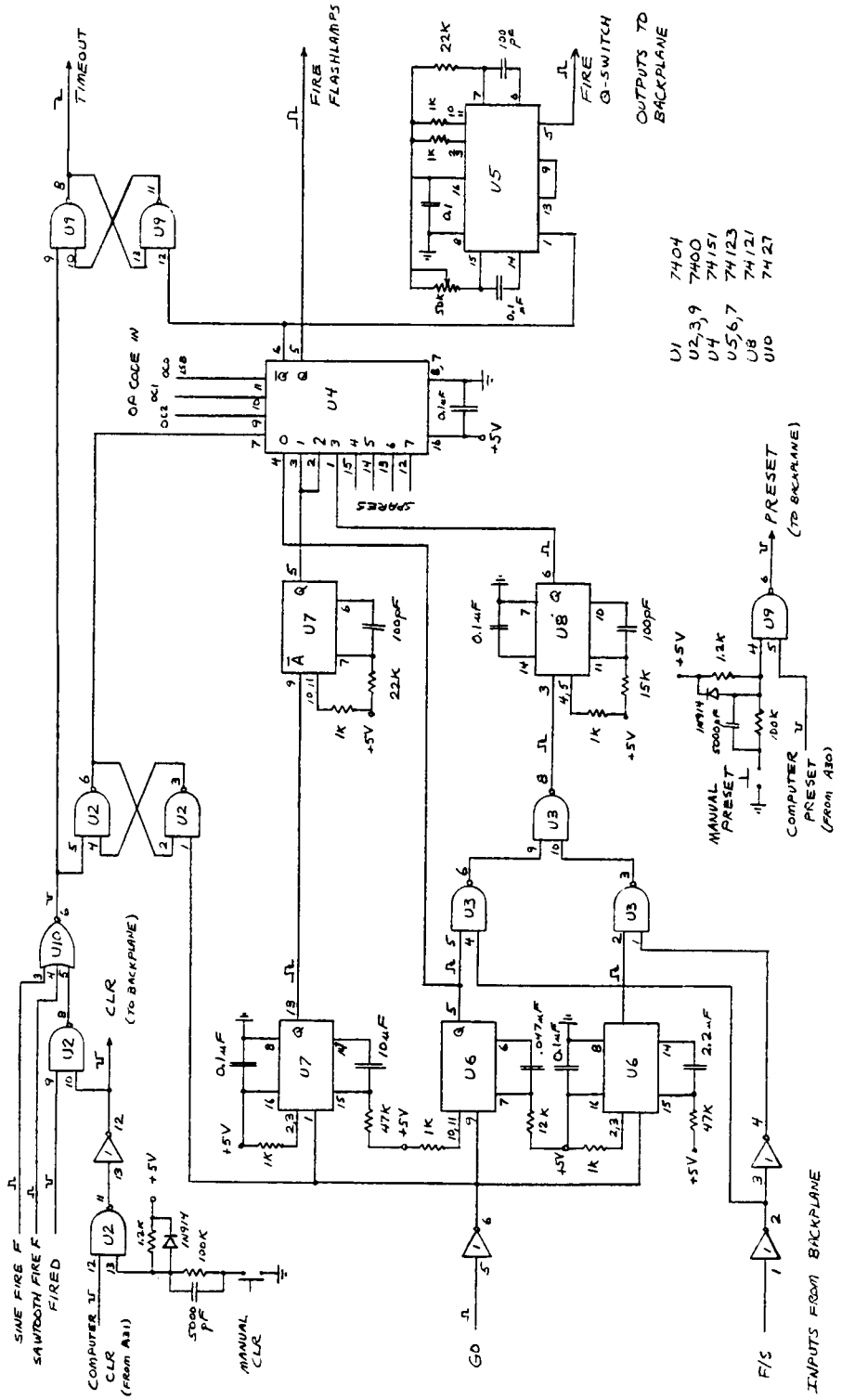

Figure 2.17. Error timeout logic circuit.

2.9 Input and Output Buffer

All inputs to and outputs from the synchronization circuits are buffered. The buffering of analog signals has already been described. Digital signals, for the most part, pass through a circuit referred to as the *input/output buffer*, as shown in Figure 2.18. All digital inputs and outputs are designed to operate with TTL level signals. Inputs such as GO and FIRED are protected from overvoltage. The fire flashlamps and fire Q-switch outputs are designed to drive TTL loads, but monitors ten and eleven are provided so that laser control inputs with 50-Ω impedance can also be used. The signals available through the monitor outputs are summarized in Table 2.3.

Table 2.3. Summary of monitor outputs

Monitor number	Signal
1	Sawtooth input, ac coupled
2	Low-pass filtered sawtooth
3	Sawtooth derivative
4	Sawtooth marker
5	Sine input, ac coupled
6	Input to bandpass filter
7	Output of bandpass filter
8	Zero-phase sine synch pulse
9	Desired phase pulse
10	Fire flashlamps
11	Fire Q-switch
12	Last sawtooth scope trigger
13	Scope trigger after flashlamps
14–18	Spares

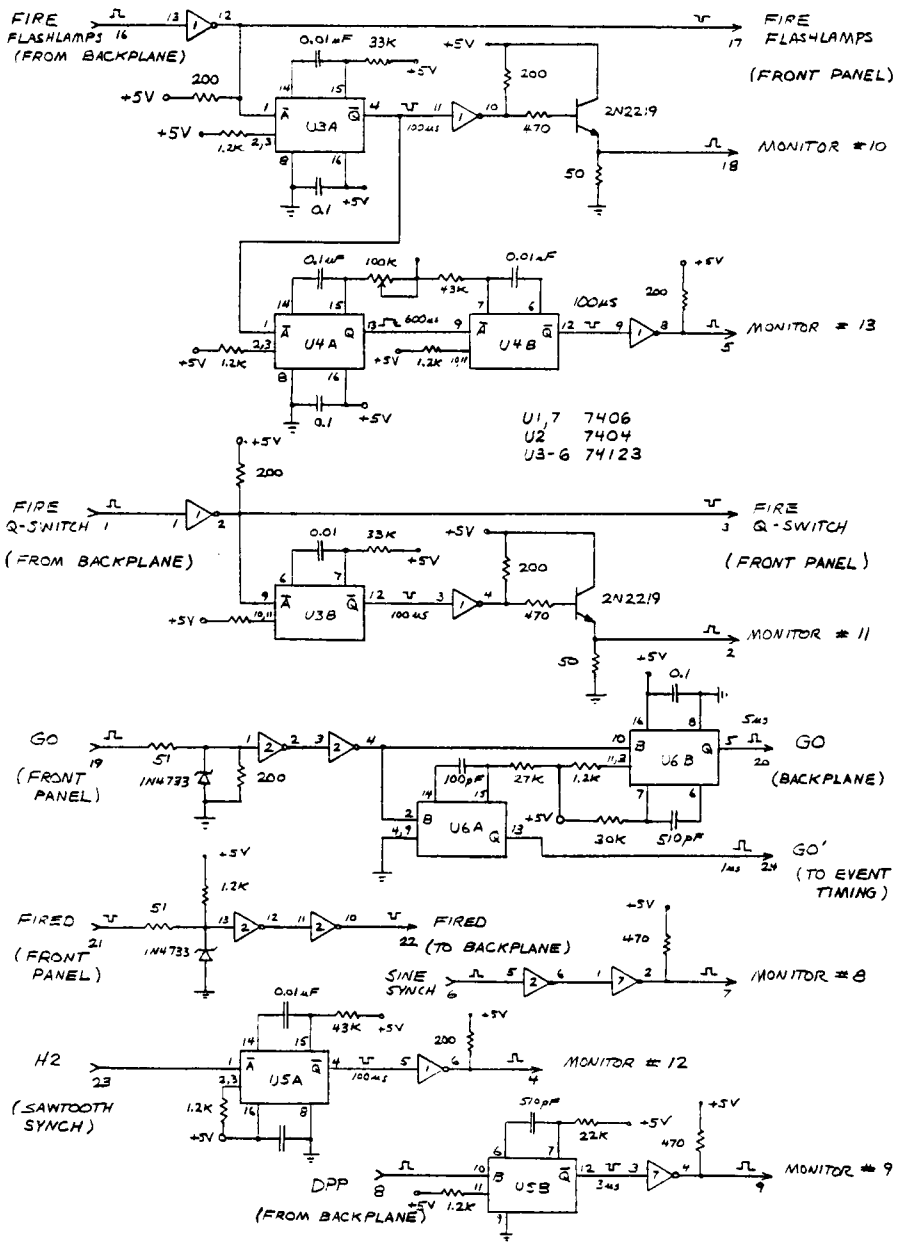

Figure 2.18. Input/output buffer circuit.

Monitors of both analog and digital signals serve several purposes. They allow a check on the operation of the synchronization instrument and allow the user to gain a better understanding of the synchronization process by displaying the processed signals and the timing pulses. In the event of hardware problems, functioning monitors would allow the location of the trouble to be determined and would facilitate repair by allowing observation of the effects of adjustments and corrections.

2.10 Operation Summary

Despite the complexity of the circuitry making up the synchronization instrument, it can be easily used. Most of the details of operation have already been discussed, but they will be summarized here. The instrument requires only three inputs to operate: the enabling GO pulse, the signal to be synchronized with, and the laser-fired pulse that signifies the end of the synchronization process and resets the instrument for the next try. There are several adjustments for the instrument parameters, but not all need to be made for each type of synchronization.

Some of the adjustments are required for any type of synchronization. The operation code determines the type of synchronization to be performed. The input select switch determines the source of the signal to be synchronized with, and the gain control adjusts the signal level to lie within the range of acceptable signal levels.

For a sawtooth synchronization, the user must input the sawtooth percentage and adjust the sawtooth derivative trigger level. The trigger level

adjustment is easily performed by viewing the sawtooth derivative and marker monitor outputs while adjusting the trigger-level potentiometer.

For a sine synchronization, the user must input the desired sine phase and preset the bandpass filter near the sine frequency. To preset the filter, when using the manual mode, the user first selects the filter period preset data and then pushes the preset switch. When using computer control, the user need only select the period data. For reliable operation, the preset period should differ from the actual sine period by no more than 50%.

For a combined sawtooth and sine synchronization, the user must make all of the adjustments required for the sine and sawtooth synchronizations. It should be noted that, since the sine synchronization process requires some time, the actual percentage of the sawtooth will be greater than the setting by a period of time approximately five times the sine period.

To bypass the instrument without disconnecting it, operation code zero may be used to fire the laser as soon as a GO pulse is received. This mode of operation can be used to check the operation of the Thomson scattering diagnostic or to fire the laser when there are no significant oscillations.

Although the instrument is designed to reset itself after a failed synchronization, depending upon the mode of failure, it may need to be manually reset by pressing the clear pushbutton or by using the software-generated "clear." For a failed sine synchronization, the filter may need to be preset again.

CHAPTER 3

COMPUTER CONTROL AND DATA ACQUISITION

3.1 CAMAC System

Computer control and data acquisition are possible through the use of the Computer Automated Measurement and Control (CAMAC) system. CAMAC is a modular instrumentation and interface system standard developed by the National Instrumentation Methods (NIM) Committee of the United States Energy Research and Development Administration (now the Department of Energy) and the ESONE Committee of the Joint Nuclear Research Center, Ispra Establishment.[5] A typical CAMAC system consists of a computer, CAMAC crates, crate controllers and modules. Figure 3.1 is a block diagram of such a system.

The computer communicates with the CAMAC modules through the crate controller and the Dataway, which is a power, control, and data bus contained in the crate. The crate controller receives data from the computer and places it on the Dataway according to the CAMAC standards concerning timing and levels. While all modules are connected to the Dataway through edge connectors, only the addressed module will respond to the data and perform the intended operation with the external equipment. Data transfer from the external equipment to the computer occurs in a similar way.

Consider an example in which the external equipment is a thermocouple and the module contains an analog to digital converter. The user could read the temperature by using software to order the computer to read the output of the sensor. The command passes from the computer through the CAMAC system

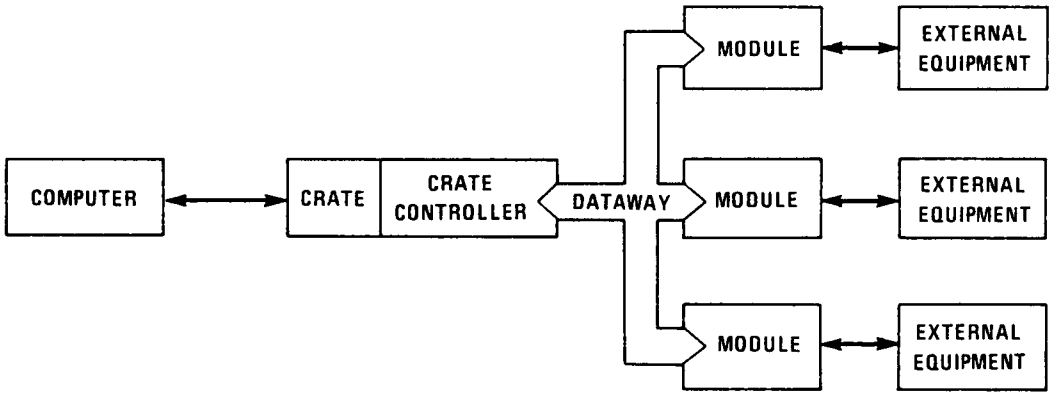

Figure 3.1. CAMAC system block diagram.

to the module. The command starts the analog to digital conversion, and, when the process is complete, the module places the digital data on the Dataway and signals the crate controller that the data set is ready. The data set is passed back to the computer where it is decoded and scaled by the software and displayed for the user.

Some additional description of the Dataway is necessary before the computer interface module for the synchronization instrument can be discussed. The Dataway layout is shown as Figure 3.2. The "N" line determines which module in the crate is addressed. The command consists of a 5-bit function code, F, and a 4-bit subaddress, A. When decoded, the function and subaddress allow for a very large number of possible responses by the module (2^9 to be exact).

The read and write busses are both 24 bits wide; therefore, up to 24 bits of parallel data can be read or written simultaneously. Timing strobes S1 and S2 are used to gate data into or out of the module. The X response indicates that the module received a valid command. The L response or "Look-at-me" (LAM) is an interrupt request indicating that the module needs attention. The Q response is the module response to a status check. The Z command initializes and the C command clears the module. The other Dataway signals are not used for the synchronization computer interface module and are not discussed here.

The timing of a Dataway command operation is shown in Figure 3.3. This timing allows the data lines to settle before data are written or read on strobe S1. The data can then be modified on strobe S2.

The Dataway operates with TTL level signals, with the high state corresponding to a logic 0 and the low state to logic 1. The crate controller contains pull-up current sources so that the Dataway lines are normally logic 0.

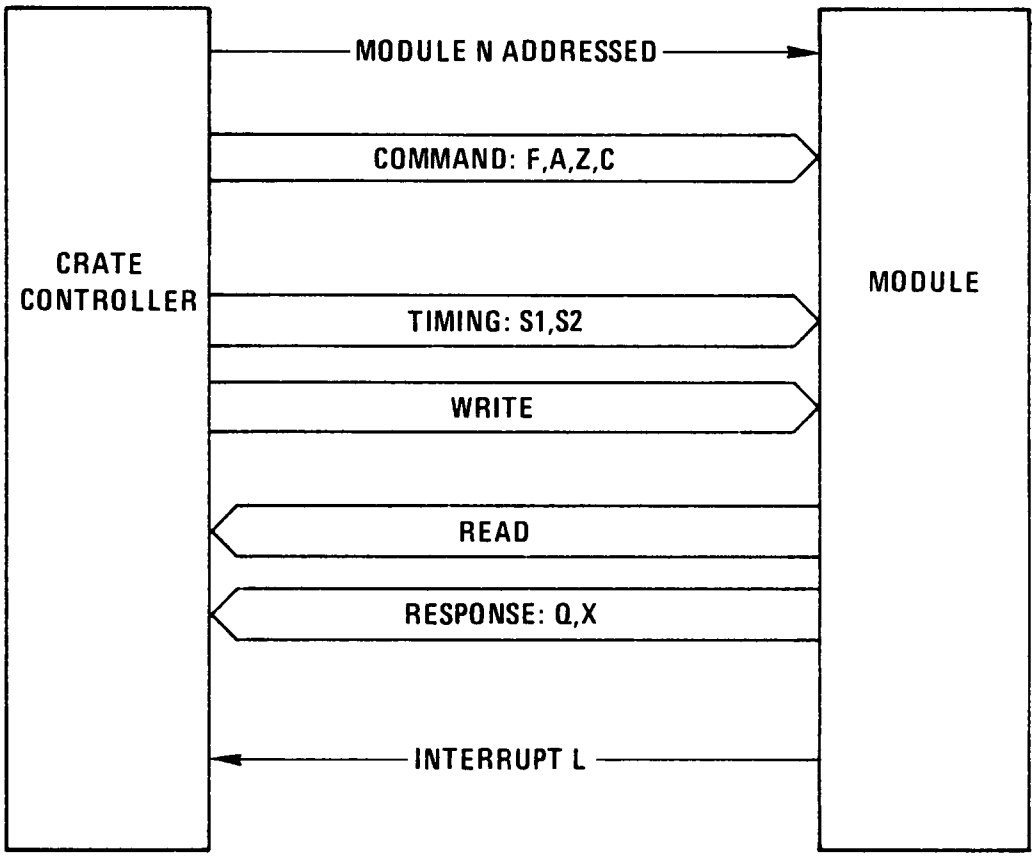

Figure 3.2. Simplified CAMAC Dataway layout.

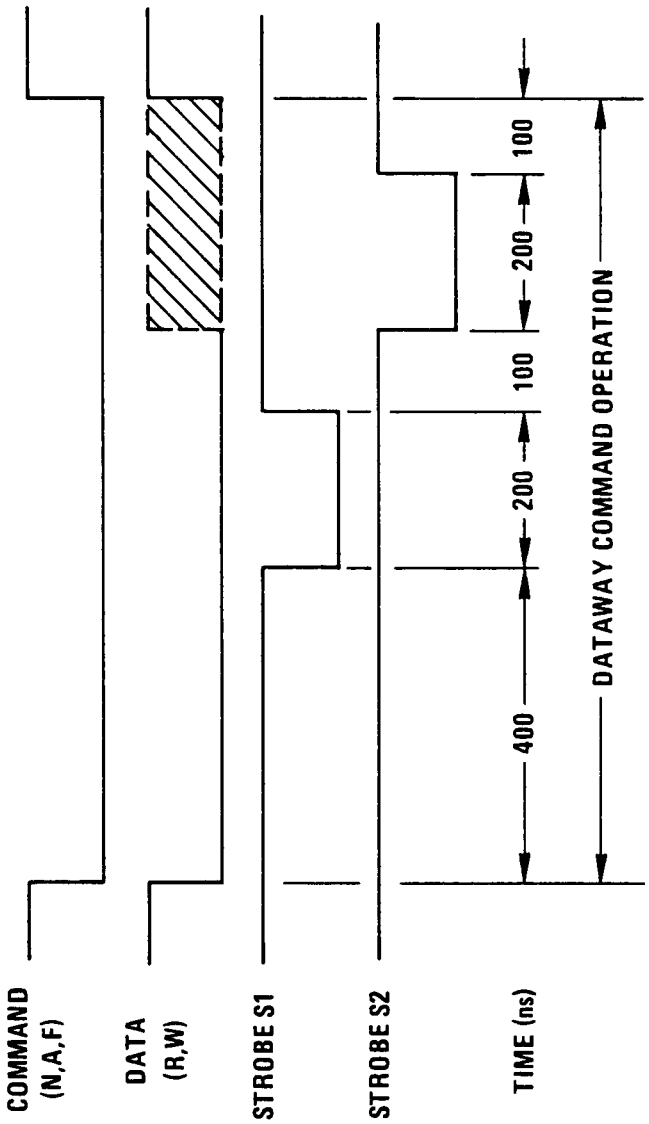

Figure 3.3. Timing of a Dataway command operation.

Since the read lines and response lines, X and Q, are common to all modules connected to the Dataway, these outputs must be wired-ORed by using open-collector drivers in each module. In this way, a single module can control the data present on the read and response lines—if the outputs of all other modules are in the high state. Typically, logic internal to a module forces all outputs to the high state, except when the module is addressed.

3.2 Computer Interface Module

The computer interface module consists primarily of a CAMAC decoding circuit, a 36-bit latch for data input to the synchronization instrument and a 24-bit buffer and 4-bit address for the tri-state data bus in the instrument. This module was designed as an integral part of the synchronization instrument. A block diagram of the computer interface module is shown in Figure 3.4.

The computer interface was fabricated using a Standard Engineering Corporation WW-006/S CAMAC Prototype module.[6] This is a CAMAC module containing the CAMAC decoding circuitry and space for additional circuitry. The decoding circuitry buffers the commands and strobes and decodes the function and subaddress lines.

The inputs to the instrument from the computer interface module are shown in Table 3.1. Because the synchronization instrument requires mainly static inputs, most of the data from the computer must be latched. The CAMAC command N·F16 is used to write data to the latches. The subaddress 0 specifies the latches corresponding to the filter preset, subaddress 1 specifies the operation code latch, and subaddress 2 specifies the combined sawtooth and sine phase data latch. The data word is actually latched on strobe S1. For

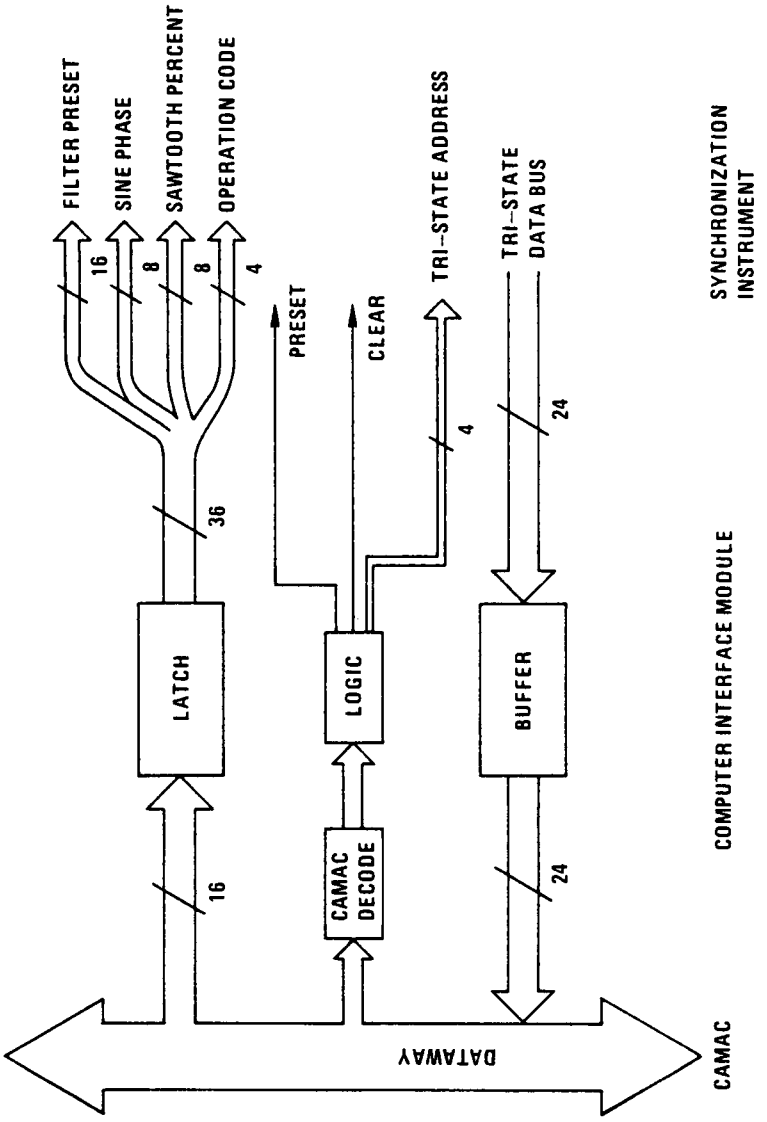

Figure 3.4. Computer interface block diagram.

Table 3.1. Inputs to synchronization module from computer interface module

Input	Number of bits	Type
Operation code	4	Static, active high
Filter preset	16	Static, active high
Sawtooth phase	8	Static, active high
Sine phase	8	Static, active high
Clear command	1	Pulse, active low
Preset command	1	Pulse, active low

N·F16·A0, which is the filter preset command, strobe S2 produces the preset pulse. The latches (U13–U17) are shown in Figure 3.5, and their operation is clear from the inputs, outputs, and load line. The circuitry that produces the clear and preset pulses is shown in Figure 3.6.

Data sets collected by the synchronization instrument are input to several sets of tri-state buffers. The outputs of each set are bussed together into a 24-bit-wide data bus using a 4-bit address to specify a particular set of buffers. The tri-state data bus is discussed in detail in Section 3.3. The data bus is brought into the interface module and passed through open-collector buffers before going onto the Dataway read lines. Pull-up resistors on the buffer inputs force the outputs to the high state if the tri-state bus is in the off state or if the synchronization instrument is disconnected from the interface module. This ensures proper operation of any other modules in the same crate. The data buffer is shown in Figure 3.7.

The CAMAC command N·F0 is used to read data. The subaddress A1 corresponds to the buffers containing the operation code, the filter code, and the period data. Subaddress A2 corresponds to the buffer containing event flags. Subaddress A0 is reserved, and all the other subaddresses are spares.

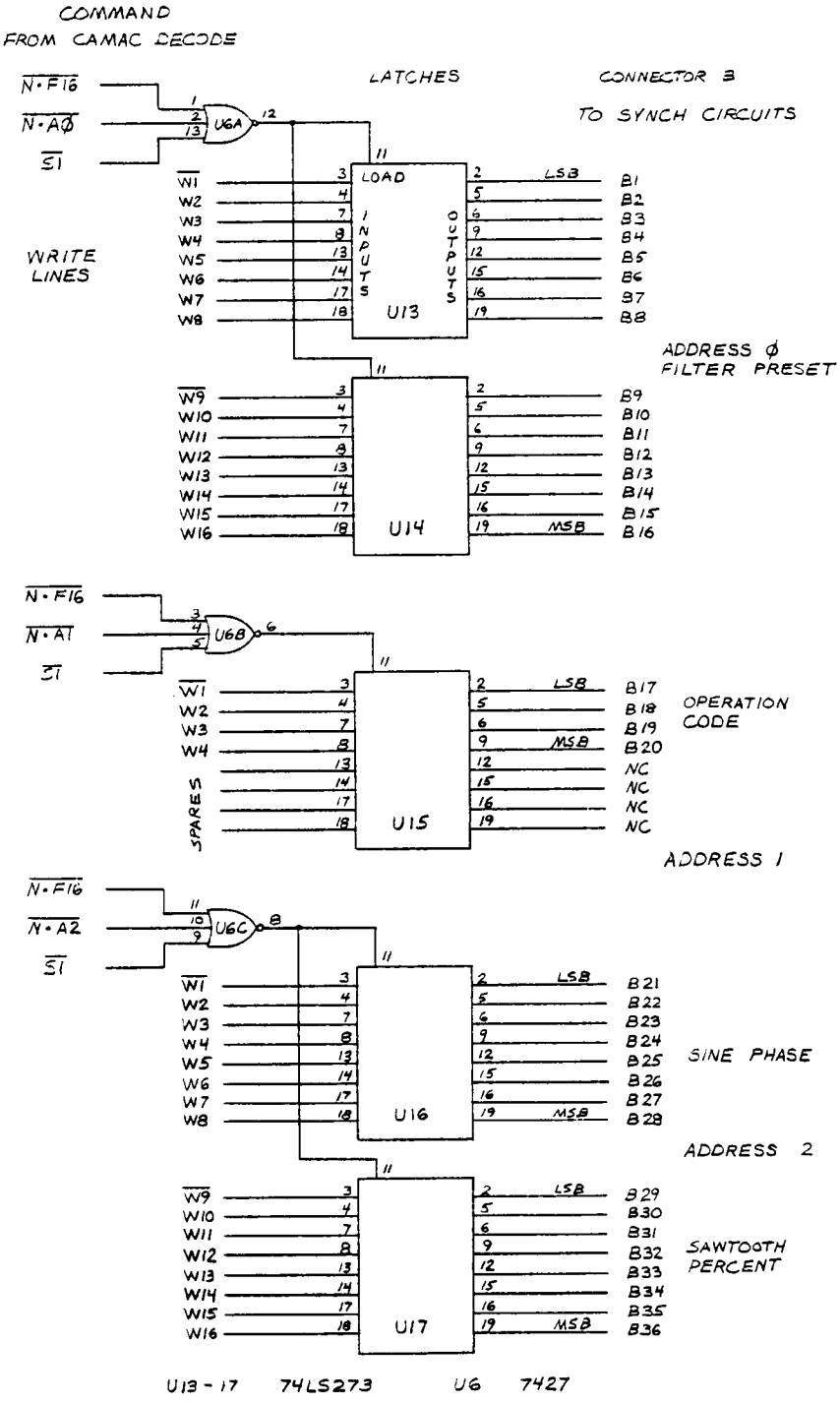

Figure 3.5. Data latches for computer interface.

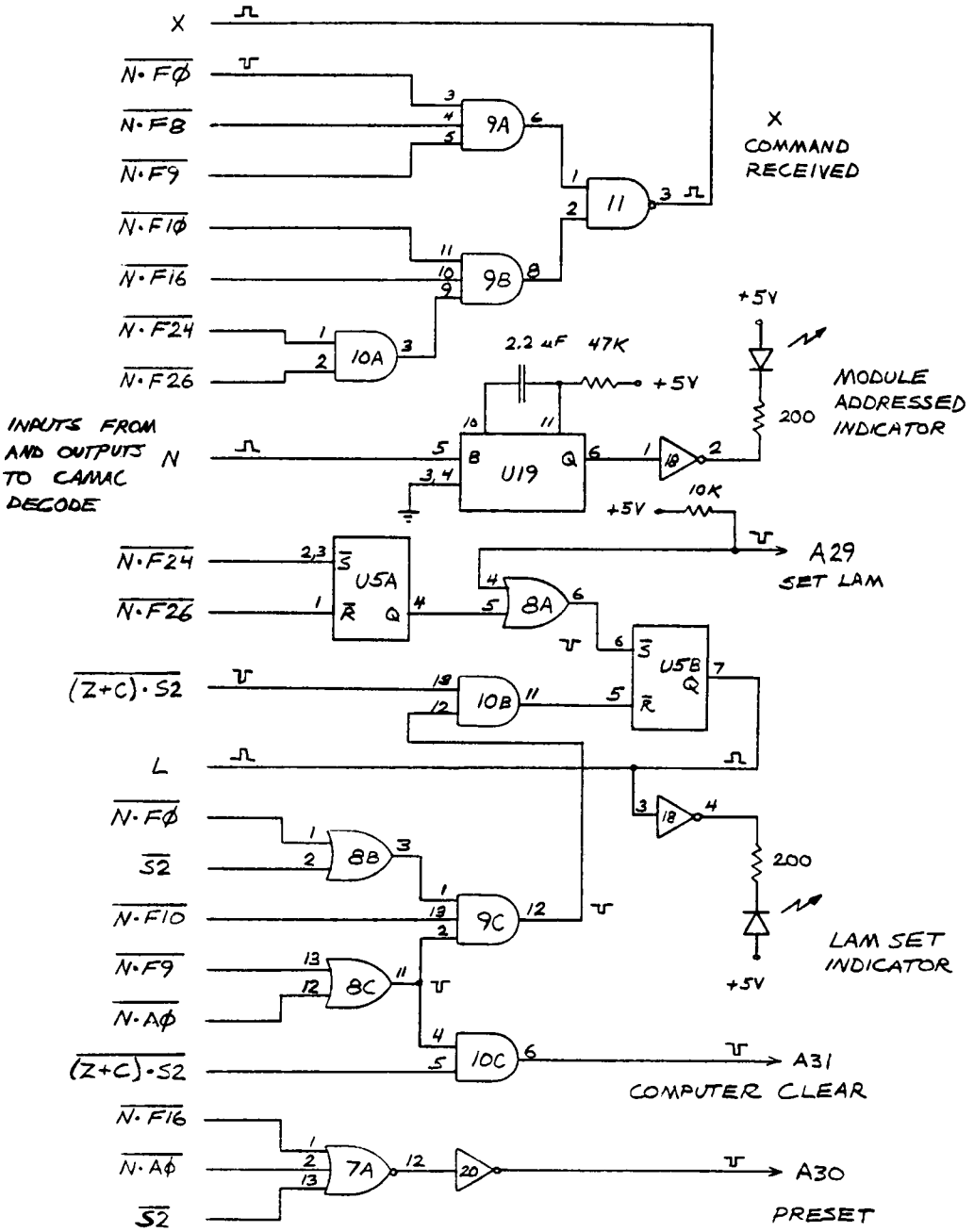

U5	74279	U11	7400
U7	7427	U18	7404
U8	7432	U19	74121
U9	7411	U20	7404
U10	7408		

Figure 3.6. Control logic circuit for computer interface.

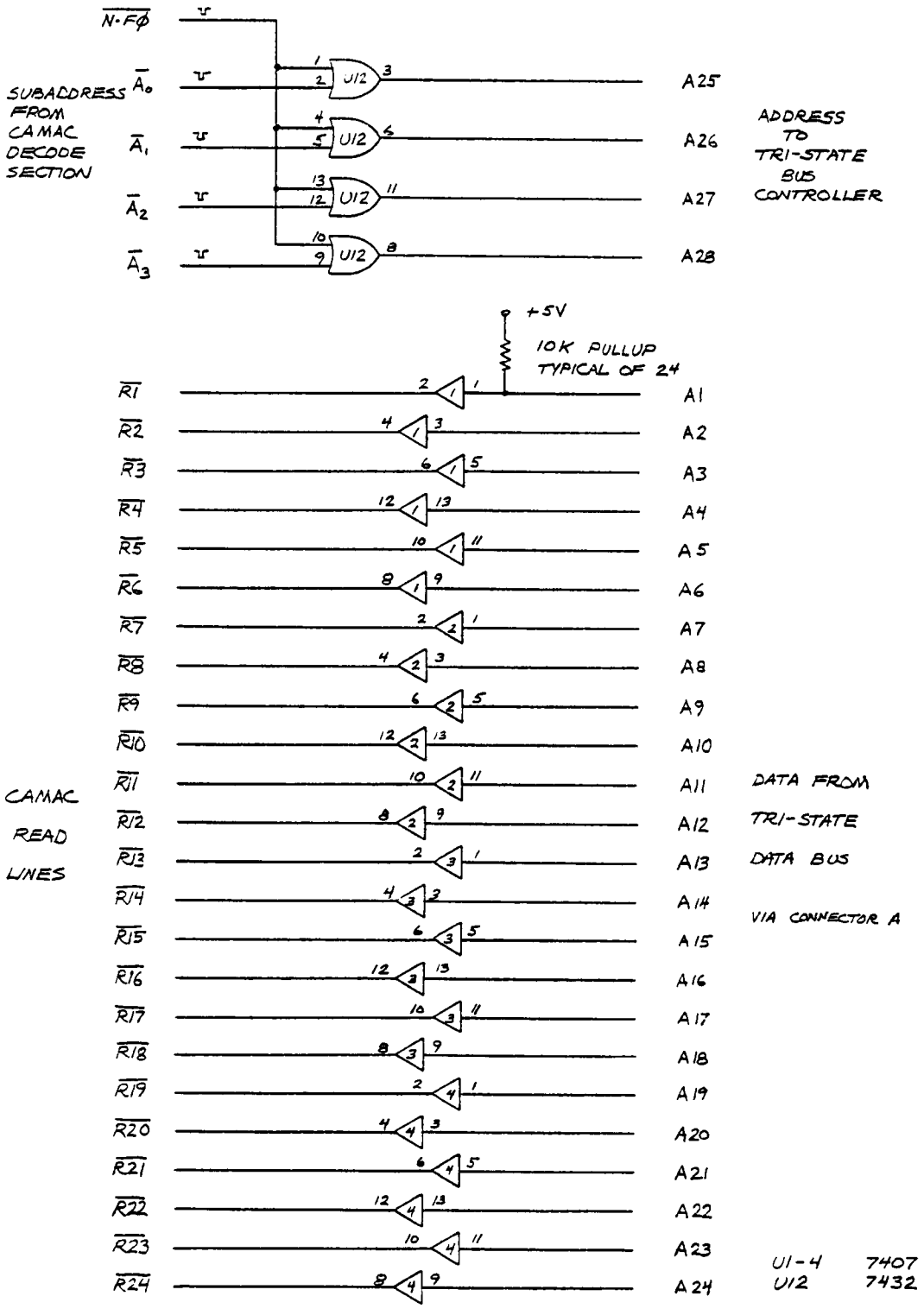

Figure 3.7. Data buffer for computer interface.

A complete list of CAMAC commands for the computer interface module is given in Table 3.2. The commands concerning the LAM are not in use but could be used to indicate an error condition to be corrected through software. For example, the sine period counter overflow error could be used to set the LAM, and the software could be designed to react to the LAM by presetting the filter to a reasonable value before synchronization is attempted again.

Table 3.2. Computer interface module CAMAC commands

Command function·subaddress	Description
N·F0·A(M)	Read data from address M
N·F8	Test LAM, Q=1 if clear
N·F9·A0	Master clear, clear LAM
N·F10	Clear LAM
N·F16·A0	Load and preset filter period
N·F16·A1	Load operation code
N·F16·A2	Load sawtooth and sine phase
N·F24	Disable LAM
N·F26	Enable LAM

3.3 Tri-state Data Bus

More bits of data are available from the synchronization instrument than can be read with a single CAMAC read command (24 bits). A tri-state data bus was designed and constructed so that the computer could control the placement of data on the bus and read multiple sets of data. The computer interface module generates a 4-bit address when reading data, and the address is decoded to provide an enable for one of the 15 possible 24-bit, tri-state buffers. When enabled, a buffer puts data onto the tri-state bus, which is connected to the computer interface module. On the CAMAC strobe S1, the data word is gated

into the crate controller and then is passed to the computer. A block diagram of the tri-state data bus data acquisition system is given in Figure 3.8, and the circuit diagram for the data bus controller is shown in Figure 3.9.

Two types of data are output through the tri-state bus. The first type remains static between synchronization operations and needs only to be buffered onto the bus. Data such as the sine period fall into this category. The circuit diagram for this buffer circuit is shown in Figure 3.10. The second type is the record of transitory events occurring during the synchronization operation. This type must be latched and buffered. Flags set by the fire Q-switch and fire flashlamp pulses fall into this category. Once latched, the data can reveal whether or not the synchronization instrument produced a particular pulse during a synchronization operation. Once the data word has been read, the latches are cleared to make ready for the next synchronization operation. The circuit diagram for this latching buffer is shown in Figure 3.11. A listing of the data output through the tri-state bus is given in Table 3.3.

Table 3.3. Tri-state bus data

Data	Type	Bus address	Bus bits
Sine period	Static	1	1–16
Operation code	Static	1	17–20
Filter code	Static	1	21–24
Error fire F	Pulse	2	1
Error fire Q	Pulse	2	2
Timeout	Pulse	2	3
Update	Pulse	2	4
Fire Q last chance	Pulse	2	5
Done	Pulse	2	6
Sine overflow	Pulse	2	7
Sawtooth overflow	Pulse	2	8
Fire Q-switch	Pulse	2	9
Fire flashlamp	Pulse	2	10

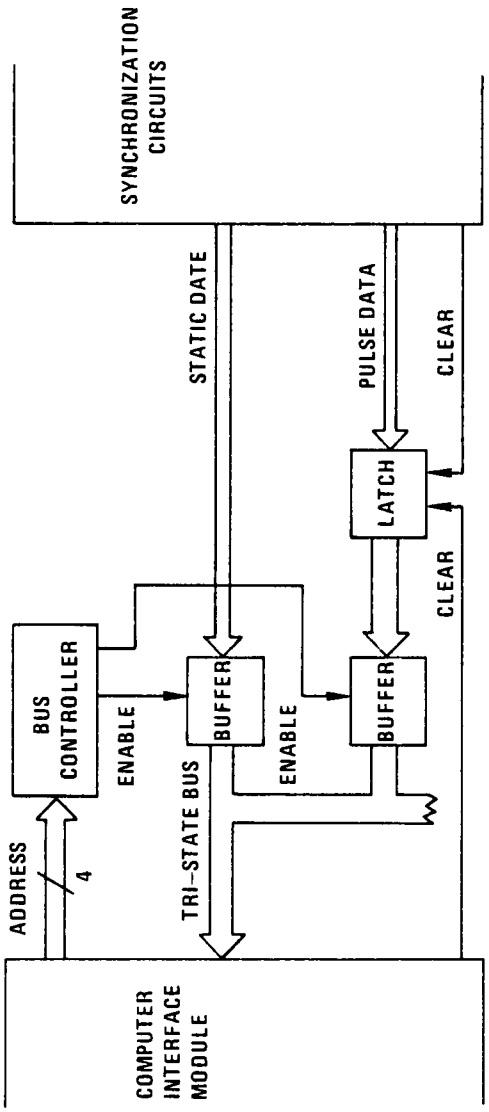

Figure 3.8. Tri-state data bus system block diagram.

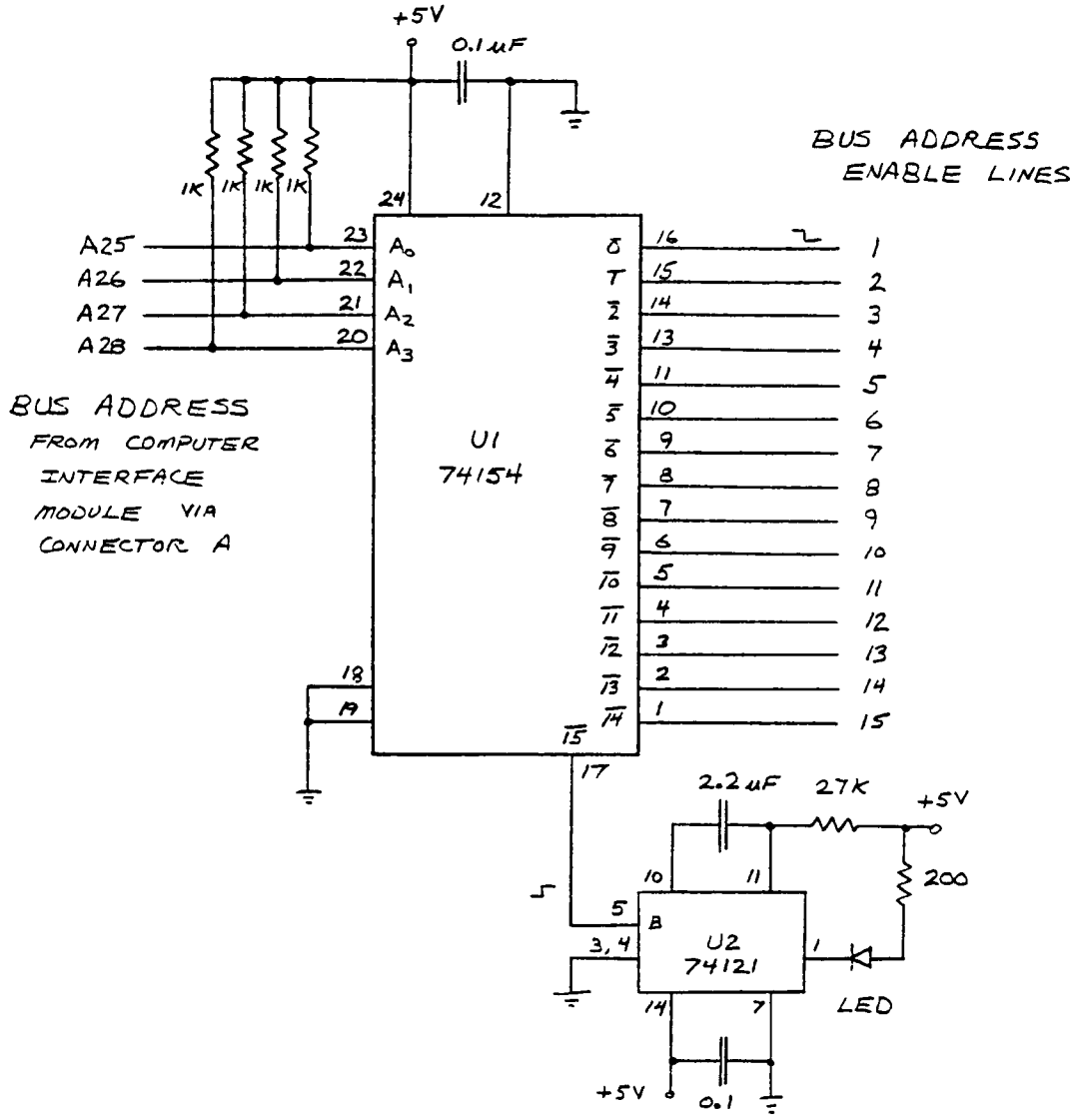

Figure 3.9. Tri-state data bus controller circuit.

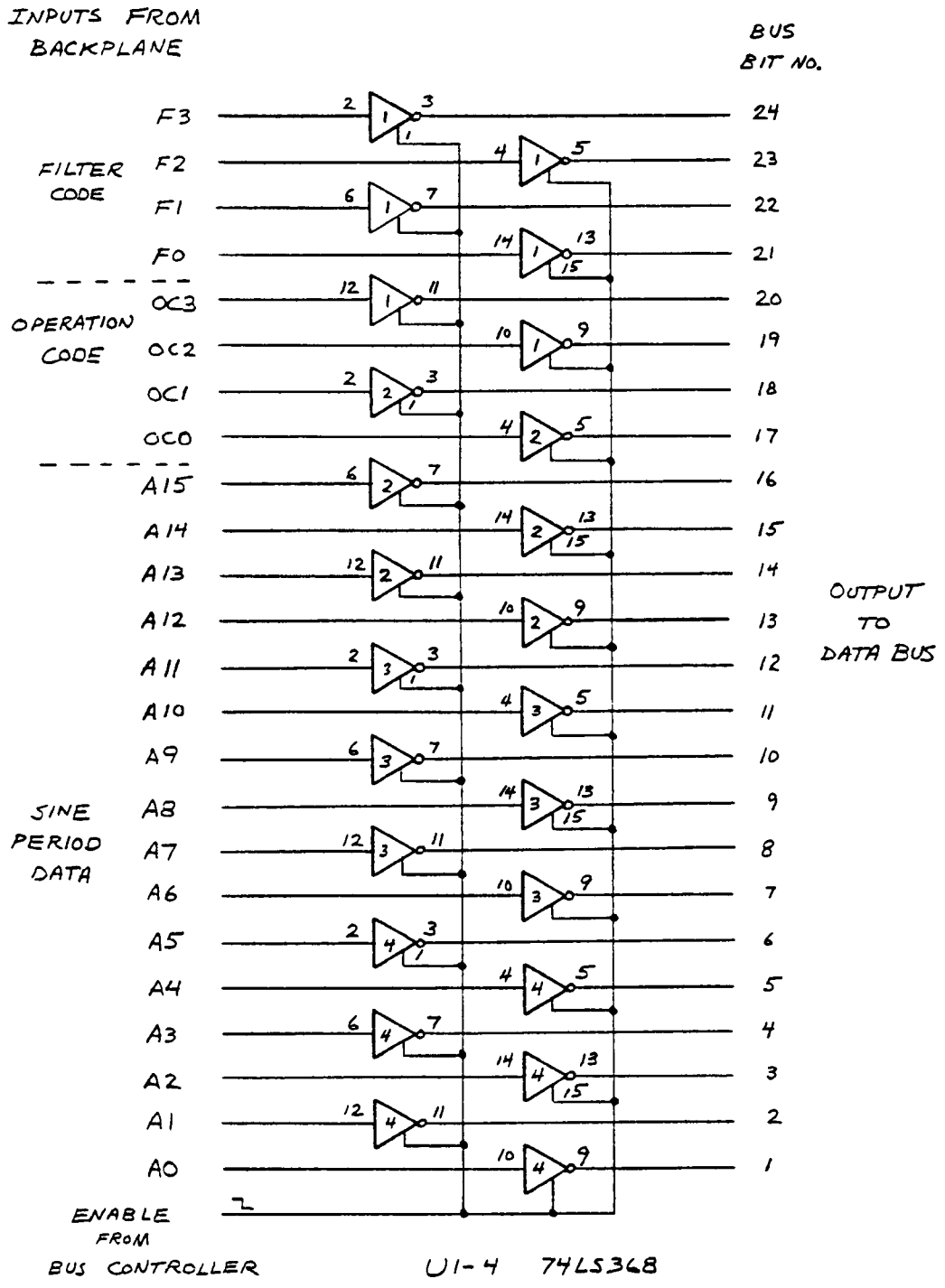

Figure 3.10. Tri-state buffer circuit.

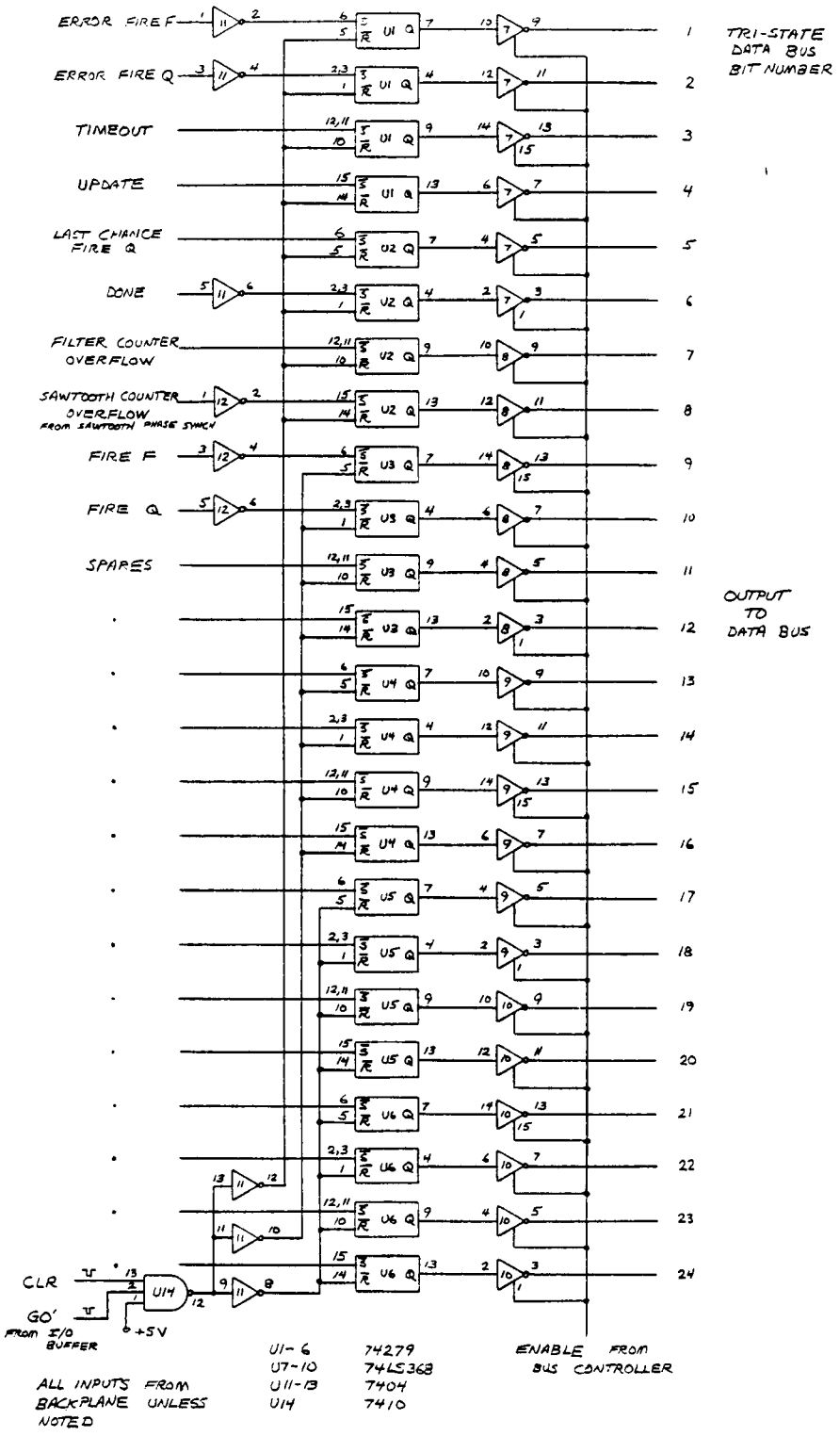

Figure 3.11. Event logger circuit.

3.4 Event Timing

The time that various events occur in the synchronization process is recorded by starting a 1-MHz clock with the t = 0 signal, counting the clock pulses with a CAMAC-controlled scaler, and using the event pulse to stop the clock. When the synchronization process is complete, the scaler channels contain the event times in microseconds. A reset pulse stops all clocks after 10 s, if they are not already stopped. This is necessary to initialize the event timing system for the next synchronization. A block diagram of the event timing system is shown in Figure 3.12, and a circuit diagram is shown in Figure 3.13.

Six channels are currently in use. Two additional channels can be added by wiring start pulses to these clock channels. Eight more channels could be added by adding components to the printed circuit board and connecting an additional scaler. The six channels in use are given in Table 3.4.

Table 3.4. Event timing channel assignments

Channel number	Scaler channel number	Event	Meaning
1	0	GO	Synchronization begun
2	1	Fire F	Flashlamps fired
3	3	Fire Q	Q-switch fired
4	4	Update	Filter update begun
5	5	EC2	Sine period timing begun
6	7	DONE	Filter update and sine period timing complete

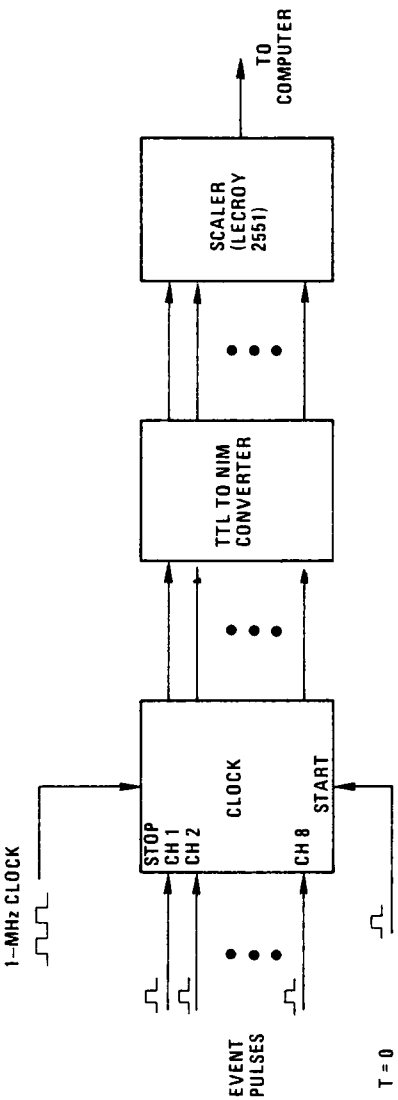

Figure 3.12. Event timing block diagram.

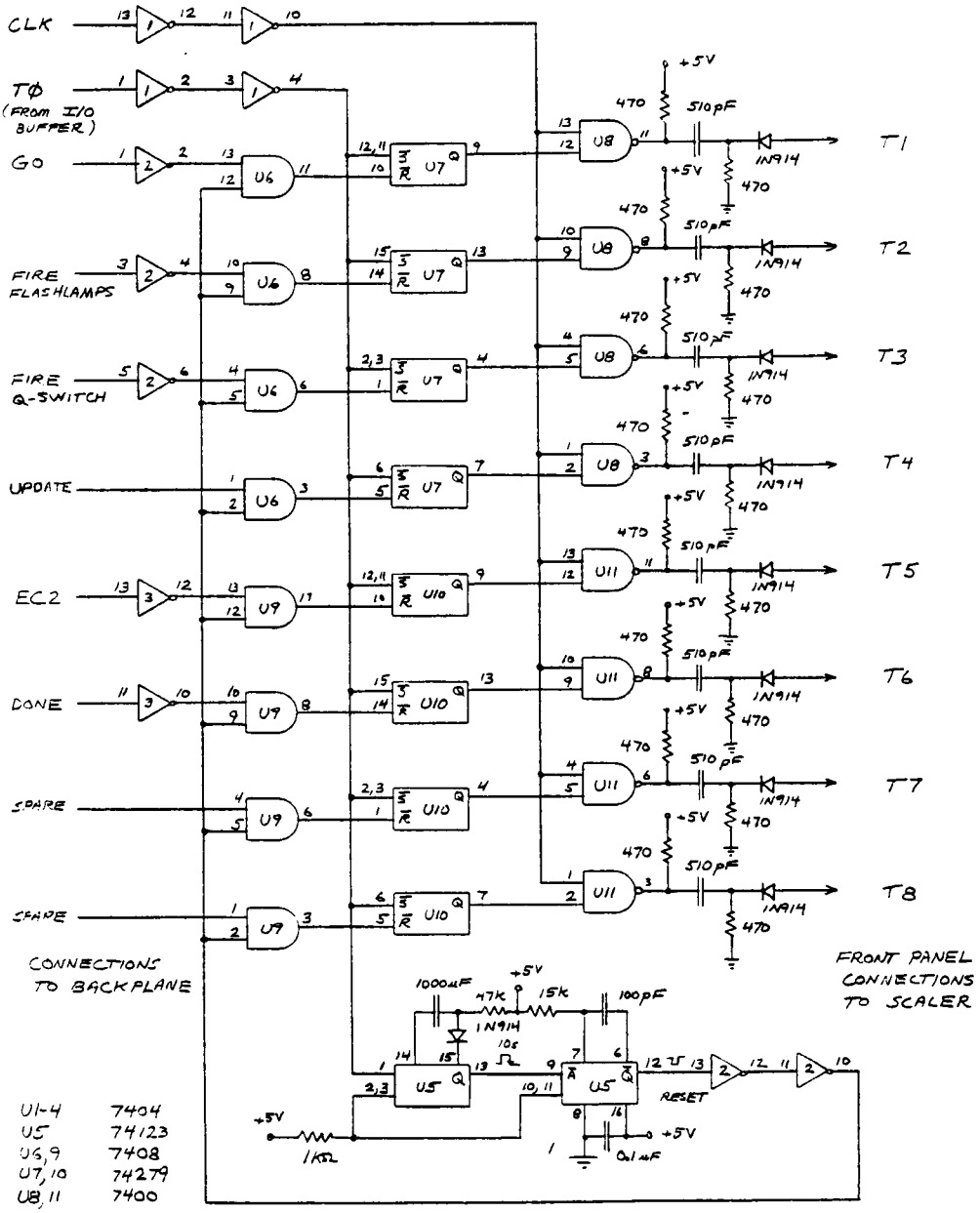

Figure 3.13. Event timing circuit.

3.5 Software

Software was developed so that through the computer interface module a computer can control the synchronization instrument and take data from it. When the synchronization instrument is under computer control, the software initializes the synchronization system and, after input from the user, executes one of a number of options, including setting synchronization parameters, reading data, and saving data in a file. A listing of the software is given in Appendix C.

System initialization consists of clearing and disabling the computer interface LAM, clearing the scaler module, and setting synchronization parameters to default values. The sine phase default is 90°, the sawtooth percent default is 50%, the filter period preset default is 100 μs, and the operation code default is one. These default values must be encoded properly in the software so that the CAMAC system and the interface module will write the correct values into the synchronization instrument.

Sine phase and sawtooth percentage are encoded in the following way. As previously explained, sine phase is stored as an 8-bit word with the maximum value of 256 corresponding to 360°, and sawtooth percentage is also stored as an 8-bit word such that 256 corresponds to 200%. These two words are stored in the same register in the interface module and must, therefore, be combined before being written into the register. The sawtooth percentage occupies the upper 8 bits of the register, so the data word written to the computer is given by

$$D = \text{INT}\,(256\,\theta/360) + 256\,\text{INT}\,(256\,R/200)\ , \qquad (3\text{-}1)$$

where D is the data word, θ is the sine phase in degrees, and R is the sawtooth percentage. INT is a function that truncates the portion to the right of the decimal point. Note that multiplication by 256 shifts that part of the data by 8 bits to the left, where the most significant bit is on the extreme left. Since the CAMAC Dataway uses active low logic and the synchronization instrument uses active high logic for this data type, the data must be complemented in software before writing to the interface module. An example of this encoding using the default values for the data is given in Figure 3.14.

The filter period preset data word is more easily encoded. This data word occupies a 16-bit register in which the least significant bit corresponds to 0.25 μs, the next bit corresponds to 0.50 μs, and so on. To program this register to a given number of microseconds, the software must multiply the given value (in microseconds) by four and complement it before writing it to the Dataway.

Before presenting the user with a list of options, the software reads the operation code, filter code, and sine period. This information is stored in one 24-bit register with the four most significant bits containing the filter code F, the next four bits containing the operation code C, and the remaining 16 bits containing the sine period S. This data word is decoded by taking

$$F = \text{INT}\,(D/2^{20}) \ , \tag{3-2}$$

$$C = \text{INT}\,[(D - 2^{20}\,F)/2^{16}] \ , \tag{3-3}$$

and

$$S = D - 2^{20}\,F - 2^{16}\,C \ , \tag{3-4}$$

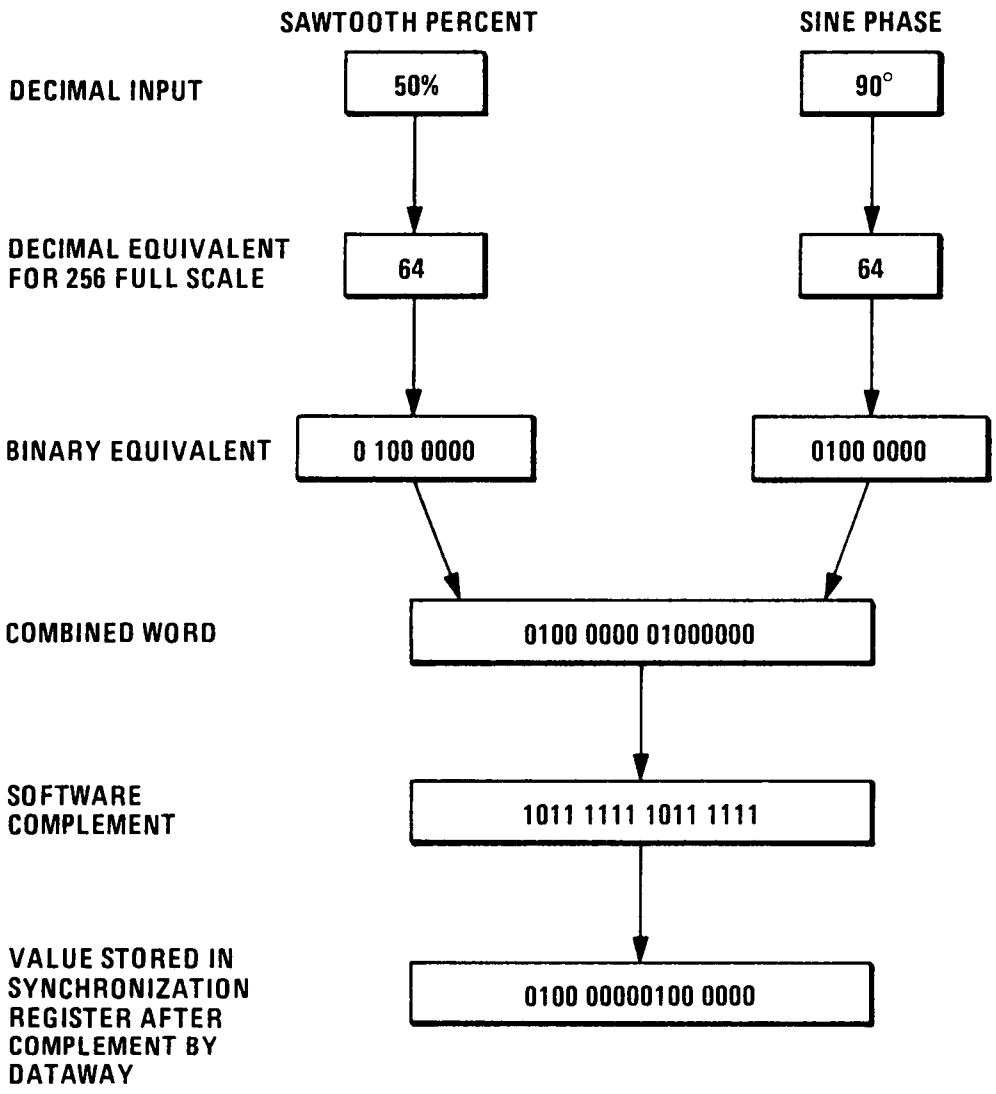

Figure 3.14. Encoding of sawtooth percentage and sine phase.

where *D* is the data word and INT is the greatest integer function. It should be noted that the tri-state buffers invert the data so the logic levels match the Dataway standards; therefore, the software does not need to invert data read from the interface module.

The user-selected functions are given in Table 3.5. Functions A through D write data to the synchronization instrument. The encoding of these data words has already been described, except for that of the operation code, which needs only to be complemented. Function F reads and displays the synchronization data, while function G does the same for the scaler data. Function H performs functions F and G after a tokamak shot and then writes the data to a file labeled with the tokamak shot number. Function I ends the program.

Table 3.5. Software-controllable functions

Function	Operation
A	Set operation code
B	Set sawtooth percentage
C	Set sine phase
D	Preset filter period
E	Clear synchronization instrument and scaler
F	Read and display synchronization data
G	Read and display scaler times
H	Read all data and write file after shot
I	Exit program

If one of the read options is selected, the software reads and decodes all the data. At this time, two data addresses are in use. The reading and decoding of address 1, which contains the filter code, operation code, and sine period, has already been discussed. Address 2 contains the status flags. Each status flag

occupies one bit, so the data word of address 2 must be decoded bit by bit. A flag bit is one when the flag is set and zero when the flag is not set. The state of the Nth bit is given by

$$F = \text{MOD}\,(X,2)\ , \tag{3-5}$$

where

$$X = D/2^{N-1}\ , \tag{3-6}$$

and N is the tri-state bus line number, D is the data word, and F is the value of the flag bit. The bit assignment is given in Table 3.3. If the flag corresponding to a particular event is set, then that event occurred during the synchronization process.

CHAPTER 4

SYNCHRONIZATION INSTRUMENT TESTING

The synchronization instrument is a general-purpose device in the sense that it was designed to function with a wide variety of inputs. With this fact in mind, testing of the device was directed toward finding broad limits for operation and more detailed characteristics for what were termed *typical* inputs.

4.1 Sawtooth Synchronization Testing

The effects of the sawtooth channel processing on a typical sawtooth signal are shown in Figure 4.1. A similar sawtooth waveform and the fire pulses are shown in Figure 4.2. These waveforms serve to illustrate the sawtooth synchronization process.

The sawtooth synchronization circuits were tested to determine the range of allowable signal periods and amplitudes, the attenuation of noise signals, and the timing accuracy of the synchronization process. The instrument was able to successfully synchronize with a 2-Vp-p sawtooth having periods ranging from 2 to 50 ms. Minimum signal levels unfortunately depend upon the shape of the sawtooth, but for a sawtooth with a reasonably sharp edge, input signal levels of 100 mVp-p can be successfully used. The instrument gain and trigger level must be adjusted to accommodate low signal levels. Maximum signal levels are ± 11 V, as determined by the input clamps.

Noise signals can disturb the synchronization by producing false sawtooth marker pulses. The synchronization circuit has filters to attenuate high-

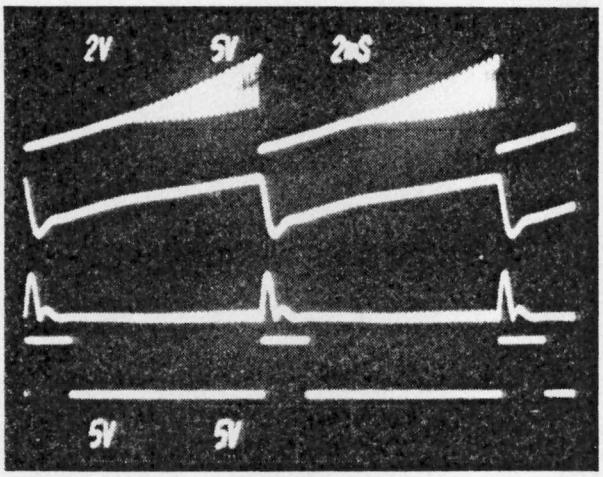

NOISY SAWTOOTH

FILTERED SAWTOOTH

SAWTOOTH DERIVATIVE

SAWTOOTH MARKER PULSES

Figure 4.1. Sawtooth synchronization waveforms.

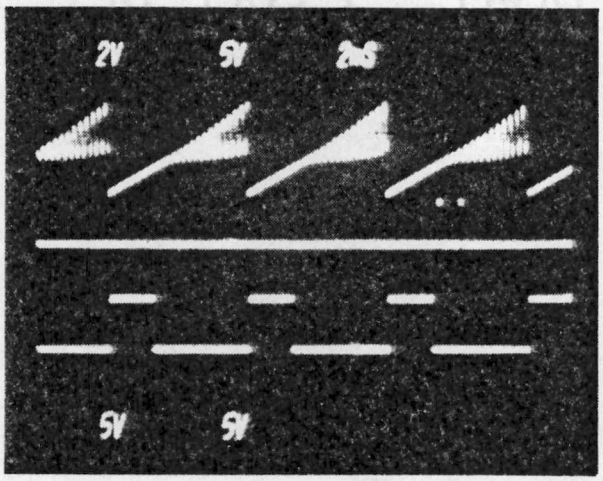

NOISY SAWTOOTH

FIRE LASER PULSES

SAWTOOTH MARKER PULSES

Figure 4.2. Sawtooth and fire laser pulses.

frequency noise and a measure of the effectiveness of this filtering is a comparison of the relative amplitudes of the differentiated sawtooth and of noise at the input to the threshold detector. For an ideal sawtooth, the differentiated signal has nearly the same amplitude as the sawtooth. A sine wave was used as a noise input and was found to be attenuated by 12 dB at 3 kHz, 20 dB at 5 kHz, 38 dB at 20 kHz, and 62 dB at 100 kHz. Thus, even for a signal-to-noise ratio of one, sawtooth synchronization can be achieved by adjusting the threshold level above the noise level.

Timing accuracy was measured with a noisy sawtooth as an input. The noisy sawtooth was created by adding a 4-kHz sine wave with an amplitude of 2.5 Vp-p to a 2-Vp-p sawtooth with a 10-ms period. The instrument sawtooth gain was two, and the threshold level was adjusted to 1 V. Timing accuracy is defined as the accuracy with which the Q-switch pulse can be placed at the desired percentage of the sawtooth. Using the manual percentage control, it was found that the timing accuracy was $\pm 2\%$ of a sawtooth period for any sawtooth percentage ranging from 20% to 200%. It should be noted that timing accuracy in actual operation will probably be limited by the variation in sawtooth period.

This series of tests demonstrated that the instrument can accurately synchronize with sawteeth having considerably more noise than the typical sawteeth shown in Figure 1.2. The sawtooth synchronization capabilities of the instrument are summarized in Table 4.1.

Table 4.1. Sawtooth synchronization capabilities

Parameter	Maximum	Minimum
Input level	±11 V	100 mVp-p
Sawtooth period	50 ms	2 ms
Signal-to-noise ratio (4-kHz noise)		1
Synchronization error	±2%	

4.2 Sine Synchronization Testing

Testing of the sine synchronization process was divided into three main parts. The first series of tests determined the phase response of the signal conditioning block. The second series of tests measured the frequency response and self-adjusting ability of the bandpass filter. The third series of tests investigated the accuracy of and the effect of noise on the entire sine synchronization process.

4.2.1 Sine Signal Conditioning Block Tests

The phase response of the signal conditioning block was measured over a range of frequencies for several different gain settings. The input was a 1-Vp-p sine wave, and the phase shift with respect to this input was measured at the input to the bandpass filter (refer to Figure 2.1). The results of this testing are given in Table 4.2. These results are important because any phase shift introduced by the sine amplifiers or filters becomes a phase error for sine synchronization. The testing revealed that the higher gains should not be used at frequencies higher than 20 kHz in order to limit the phase shift to 10°. For

Table 4.2. Phase response of sine signal conditioning block

Input	Sawtooth gain	Sine gain	Phase shift (in degrees) 250 Hz	1 kHz	20 kHz	60 kHz
Sawtooth	1	1	5	−1	−3	−8
Sawtooth	2	1	5	−1	−3	−9
Sawtooth	2	2	6	−1	−4	−12
Sawtooth	5	1	5	−1	−5	−13
Sawtooth	5	5	6	−1	−6	−19
Sawtooth	10	1	5	−1	−6	−18
Sawtooth	10	2	6	−1	−7	−20
Sine		1	6	−1	−2	−8
Sine		2	6	−1	−3	−10
Sine		5	6	−1	−5	−14
Sine		10	6	−1	−7	−19

higher frequencies with low signal levels, a wideband preamplifier could be used.

4.2.2 Bandpass Filter Tests

The testing of the bandpass filter was subdivided into two parts. The first part was the static measurement of the filter frequency response, and the second part measured the accuracy with which the filter could adjust itself. Both the filter frequency response and the adjustment point (filter center frequency) chosen for a particular sine frequency contribute to the phase error of the synchronization.

The individual bandpass filters which make up the self-adjusting bandpass filter have frequency response characteristics dependent upon the frequency to which they are adjusted. The limiting cases for the bandpass frequency response

are shown in Figure 4.3. Also, the actual center period for each adjustment point for each bandpass filter was found and compared to the theoretical value. The maximum error found was 1.8%, but only 15% of the 256 adjustment points were in error by more than 1%. An error of 1.8% means that the phase shift of a sine wave whose period requires the use of that particular adjustment would be a maximum of 15°.

The ability of the filter to adjust itself was tested. The filter was preset to various periods and then given the update command. The filter control circuits were able to determine the period of a sine wave with microsecond accuracy and to choose the filter adjustment on that basis if the signal passing through the filter had sufficient amplitude to trigger the zero-crossing detector. For a preset period reasonably near the actual sine period, the signal level at the input to the filter must be at least 150 mVp-p. The filter preset period had no effect on the filter adjustment chosen. (It should be noted that the sine wave used was noiseless, and the filter preset could make a difference if the signal were noisy.)

The phase shift due to the filter after adjustment was measured. A function generator was used to produce an update pulse every 10 ms, and the filter input and output were used as the horizontal and vertical inputs to an oscilloscope. From the resulting Lissajous pattern, the phase difference between the two signals was estimated. The sine frequency was slowly swept over the entire range of the filter and the frequency corresponding to maximum phase shift found. Once this frequency was found, the update signal was disabled and the worst-case phase shift measured was 12.4°. It is worth noting that when the filter is updated every 10 ms, the output (as displayed on an oscilloscope) appears to track the input as the frequency is continuously varied.

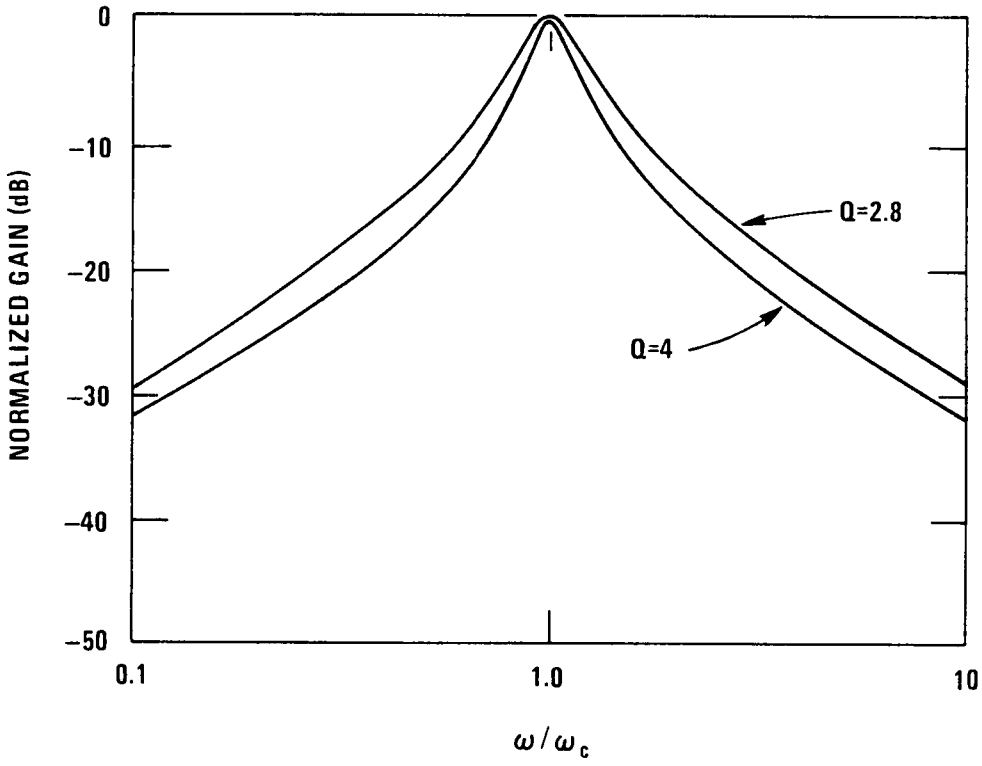

Figure 4.3. Bandpass filter frequency response.

The ability of the bandpass filter to adjust itself to the period of a sine wave contaminated with noise was tested. An uncorrelated square wave added to a 2-Vp-p, 260-μs sine wave was input to the synchronization instrument. The filter was preset to 200 μs and updated. The purpose of this test was to find the square-wave amplitude necessary to prevent the filter from adjusting to the sine-wave period. It was found that, for many interfering frequencies, the filter would adjust properly even for signal-to-noise ratios less than unity. Results from this test are given in Table 4.3. Figure 4.4 is an example of the filter updating with a noisy signal.

Table 4.3. Filter adjustment noise limits

Square-wave period (μs)	Signal-to-noise ratio
20	0.7
30	0.7
60	0.5
100	0.7
150	2.0
200	4.0
300	1.4
400	0.7
800	0.5

This set of tests demonstrated that the worst-case phase shift introduced by the bandpass filter was very nearly what was expected from the design (12.4° versus >10°). Also, the tests showed that the bandpass filter will adjust correctly even if the signal-to-noise ratio is very poor (less than unity) if the filter period preset is near the signal frequency and the noise frequency differs from the signal frequency by at least a factor of 2.

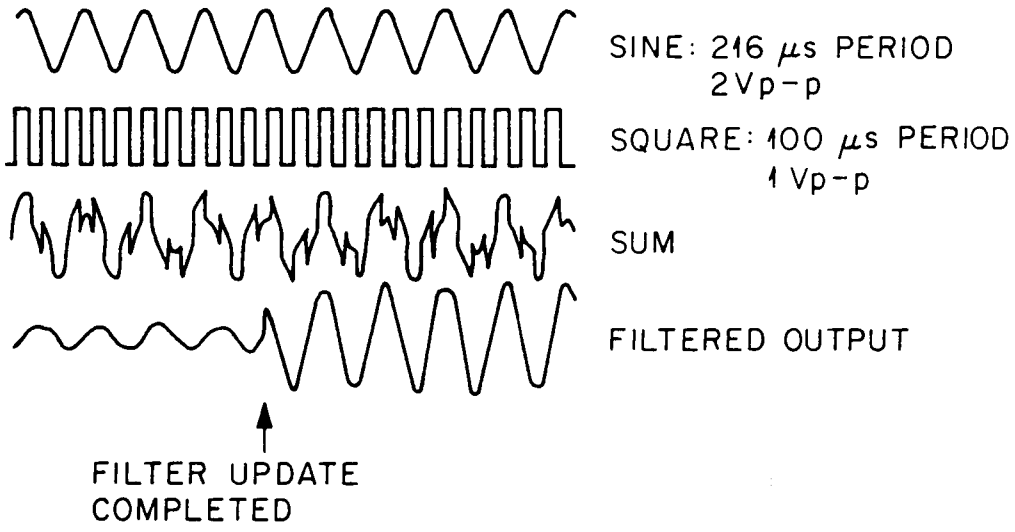

Figure 4.4. Filter adjustment with noisy signal.

4.2.3 Sine Synchronization Tests

The accuracy of the sine synchronization process was tested by measuring the phase of the input sine wave at the time that the synchronization instrument produced a Q-switch pulse. In the first part of this test, a noiseless sine wave was used and the filter was preset to the correct period. The desired phase was input manually and varied from 3% to 100% (11° to 360°). Results from this test are given in Table 4.4. The instrument does not synchronize accurately for sine periods greater than 1000 μs. Note that the relatively large error in phase for the shortest periods is due to a small time delay. This is the delay introduced by the sine phase comparator. The phase error, E, for the sine synchronization tests is given by

$$E = \theta_Q - \theta_q \ , \tag{4-1}$$

where θ_Q is the actual phase when the Q-switch fired and θ_q is the desired phase.

Table 4.4. Sine synchronization accuracy test results

Sine period (μs)	Maximum error for Q-switch timing	
	(degrees)	(μs)
20	29	1.5
33	13	1.5
50	14	2
100	5	1.5
200	5	2
400	13	6
800	9	20

The sine synchronization process was then tested for a 2-Vp-p, 100-μs sine wave with a 2.5-Vp-p, 50-μs square wave added to it. The synchronization instrument was preset for the sine wave period and adjusted to produce a Q-switch trigger when the sine wave phase reached 90°. The variation in the phase when the Q-switch pulse actually occurred was examined. It was found that the mean phase was 92.5° with a standard deviation of 13.8°. The mean phase had no more error than would be expected for a noiseless sine wave, but on a single laser shot, the error would probably be much larger. This amount of noise represents an extreme case, yet the synchronization instrument still functions with nearly tolerable accuracy.

Noise interferes with the sine synchronization process by moving the positive-slope, zero-crossing points of the filter output with respect to the zero-phase points of the sine wave. For a sine wave contaminated with a second harmonic, the instrument electronics solve

$$\sin(2\pi t/T) + B \sin(4\pi t/T + \theta) = 0 \ , \tag{4-2}$$

where T is the sine wave period, θ is the phase of the second harmonic, and B is the ratio of the second harmonic amplitude to the fundamental amplitude. The instrument produces a pulse for the values of time t, where Eq. (4-2) is satisfied and the signal's slope is positive. All timing is referenced to these zero-phase synchronization pulses and, if the synchronization pulses are in error by a certain amount of time, the Q-switch pulse will have the same error.

The sine synchronization process was tested with a 4-Vp-p, 100-μs sine wave with a 0.4-Vp-p second harmonic added to it. These amplitude values

were measured at the filter output. (At the instrument input, the sine-wave amplitude was 2 Vp-p and the harmonic was 1.3 Vp-p.) The error in the phase when the Q-switch fired was measured for various values of θ (the harmonic phase). To examine the part of the phase error due to the effects of the harmonic, the phase error for synchronization with the fundamental and no harmonic was subtracted from the measured phase errors. This data is plotted in Figure 4.5.

A computer program was used to solve Eq. (4-2) for t using various values of B and θ. If there is no harmonic, the sine wave crosses zero at time $t = 0$, and the shift in time of the zero-crossing due to the harmonic results in a phase error (in degrees) given by

$$E = 360t/T \ . \tag{4-3}$$

The program uses Eq. (4-3) to convert the zero-crossing times to phase errors. The phase error for $B = 0.1$ is also plotted in Figure 4.5. The agreement with the experimental data is excellent.

This series of tests revealed that the accuracy of the sine synchronization process was nearly as desired ($\pm 14°$ versus $\pm 10°$) for a noiseless signal and that this accuracy would be degraded very little for noisy signals. For second-harmonic noise, the maximum additional phase error is 6° for a signal-to-noise ratio of 1.5. This level of noise is an extreme case for actual operating conditions. The instrument's sine synchronization capabilities are summarized in Table 4.5.

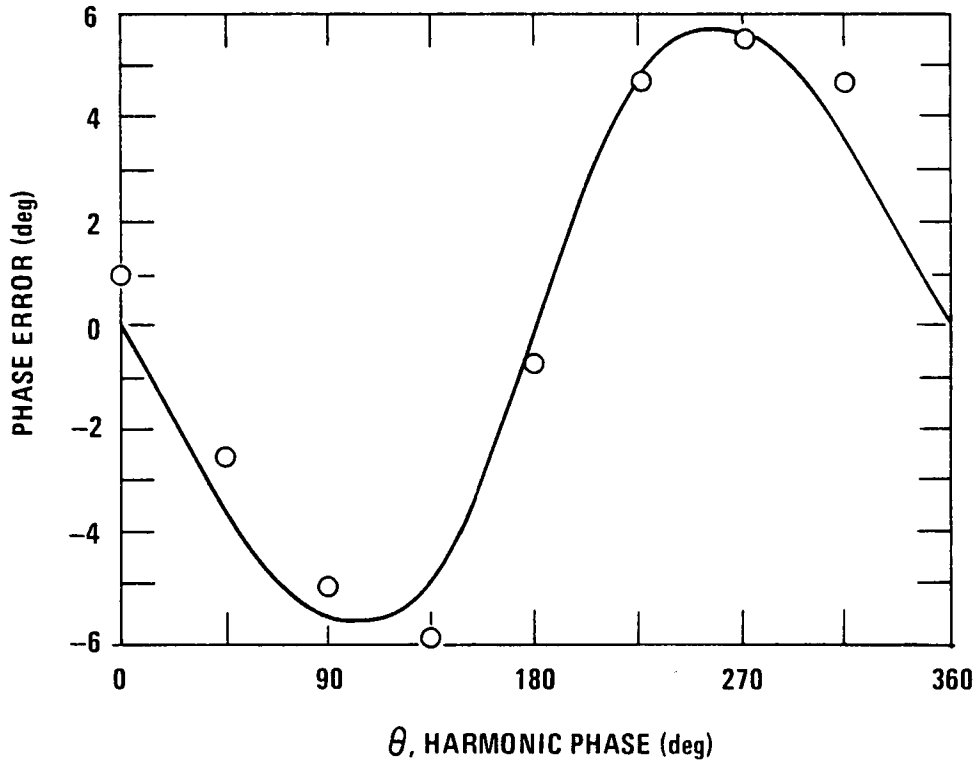

Figure 4.5. Sine synchronization phase error as a function of harmonic phase.

Table 4.5. Sine synchronization capabilities

Parameter	Minimum	Maximum
Bandpass output signal level	150 mVp-p	10 Vp-p
Bandpass phase shift		±12.4°
Second-harmonic attenuation	12 dB	16 dB
Desired phase	11°	360°
Sine synchronization error		±14°
Sine synchronization frequency	1 kHz	30 kHz

4.3 Noisy Sawtooth Generator

In order to test the synchronization instrument under realistic conditions, a reasonably complicated waveform is needed. To facilitate testing, a device referred to as the *noisy sawtooth generator* was developed. This device produces a waveform similar to that of Figure 1.2. Sawtooth period and amplitude, sine frequency, and amplitude are independently controllable. The relative strengths of the sine-wave fundamental and second harmonic are also adjustable. Sawtooth period is adjustable from 1.5 to 17 ms, while useful fundamental sine frequencies range from 3.6 to 25 kHz. The output signal level is adjustable from 2 to 15 Vp-p. Unmixed ramp and sine-wave outputs are also available. A scope trigger signal referenced to the sawtooth is provided.

Figure 4.6 is a block diagram for the noisy sawtooth generator. A variable-frequency clock drives a 2-bit counter. The counter outputs are square waves with the higher frequency being the second harmonic of the lower frequency. These square waves are low-passed to approximate sine waves. The output of a free-running sawtooth generator is level shifted and clipped to produce

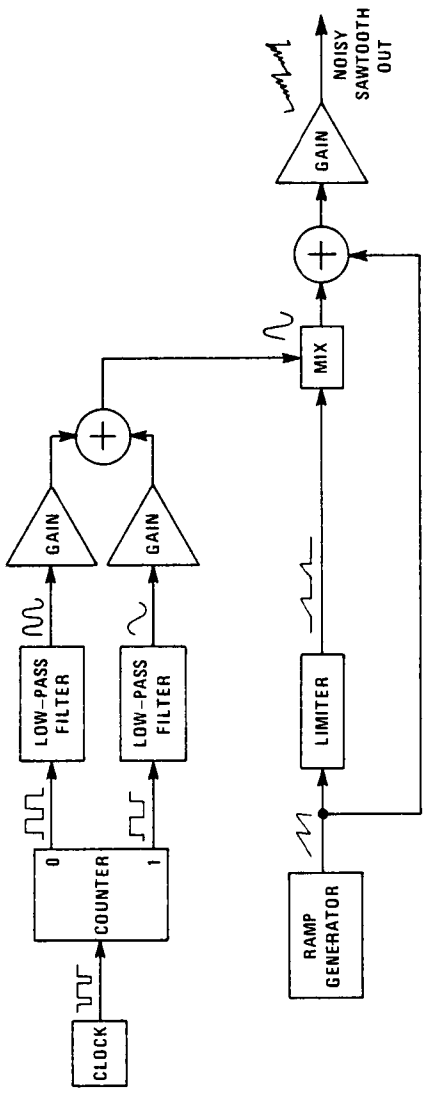

Figure 4.6. Noisy sawtooth generator block diagram.

a signal that is mixed with the sum of the sine waves. This mixing produces bursts of sine waves that are added to the sawtooth to produce the desired waveform. A detailed circuit diagram is shown in Figure 4.7.

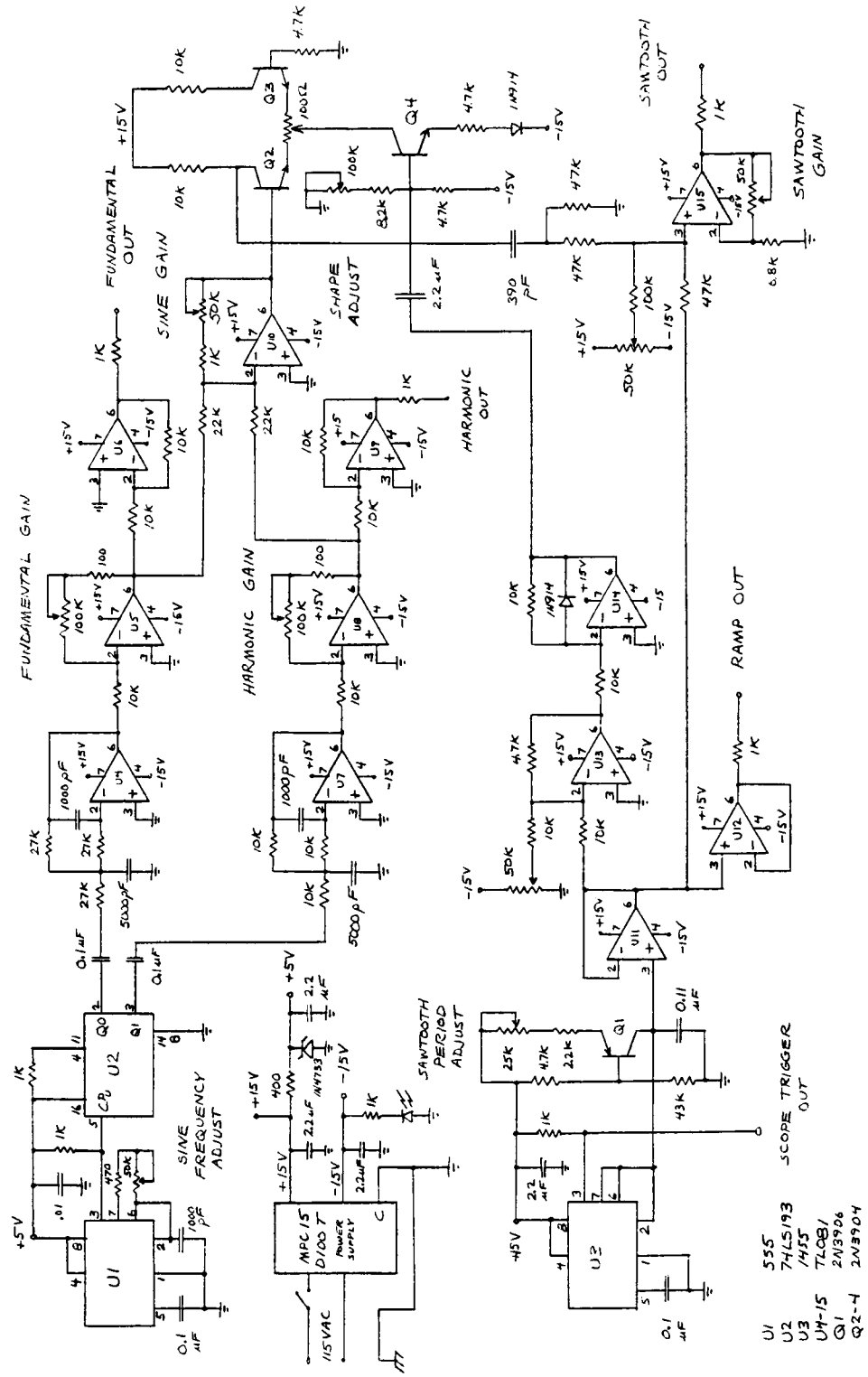

Figure 4.7. Noisy sawtooth generator circuit.

CHAPTER 5

RESULTS

In this chapter, results from the use of the synchronization instrument are given. Two experiments were performed in which the instrument was used to synchronize the firing of the Thomson scattering laser with the soft X-ray signal from ISX-B. The purpose of these experiments was to observe the variation of the electron temperature profile with the phase of the X-ray signal. In the first experiment, the tokamak discharge parameters were adjusted to produce a continuous m = 1 oscillation, which appeared as a sinusoid in the soft X-ray trace. For the second experiment, the discharge parameters were adjusted to produce sawteeth, as well as m = 1 activity.

5.1 Synchronization with m = 1 Oscillations

An example of this type of synchronization is shot number 67772, which produced the soft X-ray signal shown in Figure 5.1. The desired phase was adjusted to 180° (an allowance was made for the 5-μs delay between the fire Q-switch pulse and the actual Q-switching of the laser), and the synchronization instrument was enabled 250 ms into the shot. A portion of the X-ray signal, the filter output, and the fire laser pulses are shown in Figure 5.2. The filter output shows the effect of the filter adjustment. Figure 5.3 shows the laser-fired pulse superimposed upon the X-ray signal. From this figure, it can be seen that the laser fired when the phase was approximately 180°. Typical errors were approximately 10°.

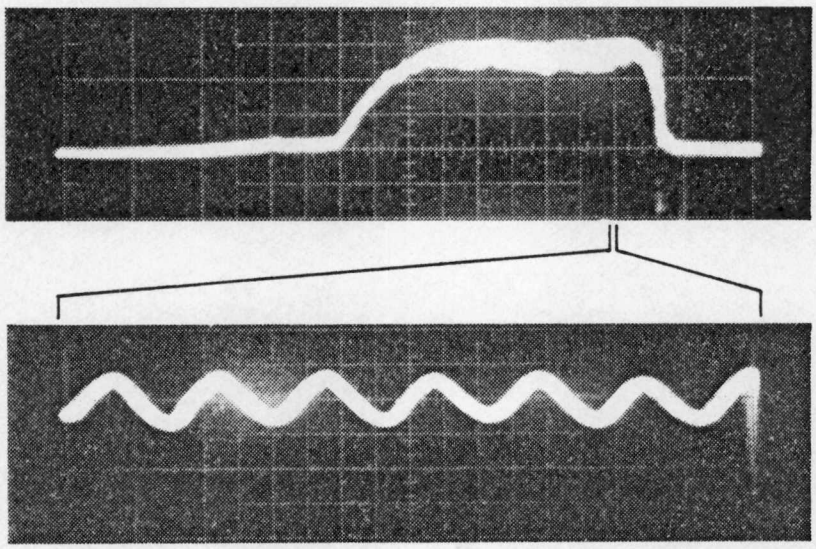

Figure 5.1. Soft X-ray signal for shot number 67772.

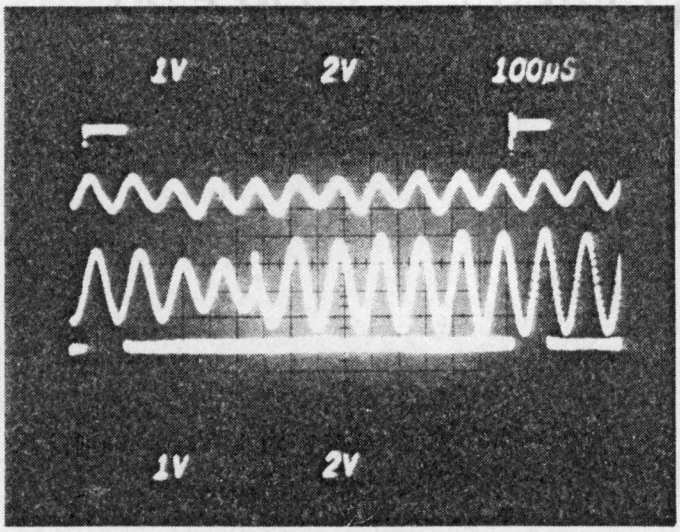

Figure 5.2. Sine synchronization waveforms.

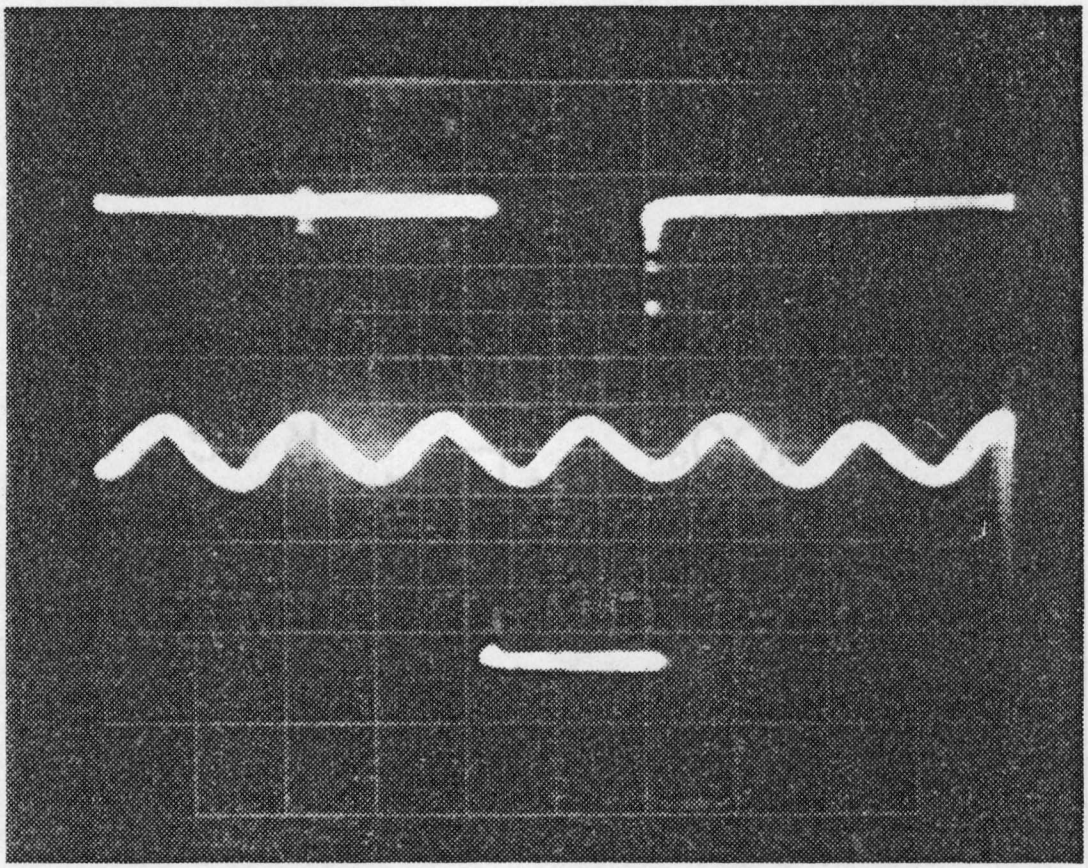

Figure 5.3. X-ray signal and laser-fired pulse.

The synchronization data file for shot number 67772 reveals that the filter was initially adjusted for a 96-μs period and that the actual sine period was 80 μs. The synchronization was successful, because only the DONE, update filter, fire flashlamps, and fire Q-switch flags are set. (The other flags represent error conditions.) The scaler data reveals that the instrument was enabled 249.995 ms into the shot, and the filter adjustment began immediately. Zero sine phase was detected 23 μs after the enable and, as a result, the flashlamps were fired and period timing began. Period timing required an additional 320 μs (four sine periods). Finally, the fire Q-switch pulse was generated 806 μs after the fire flashlamps pulse. The data file for shot number 67772 is included as part of Appendix C.

In order to understand the variation of the temperature profile with the phase of the m = 1 oscillation, the m = 1 mode structure must be considered. MHD theory predicts, and X-ray measurements confirm, the existence of magnetic islands of the type shown in Figure 5.4 (ref. 7). The X-ray signal level varies roughly sinusoidally as the islands rotate in and out of the detector line of sight. The amplitude of the X-ray signal is proportional to T_e (ref. 8), so the laser profile should have a double peak when the chord along which the temperatures are measured intersects the islands. The profile should be relatively flat when the measurement chord passes between the islands. Because the detector output peaks twice for each revolution of the plasma column, the X-ray signal frequency is twice the rotational frequency, and the flat profile should be separated from the doubly peaked profile by 180° with respect to the X-ray signal. Examples of the two types of temperature profiles are given in Figure 5.5.

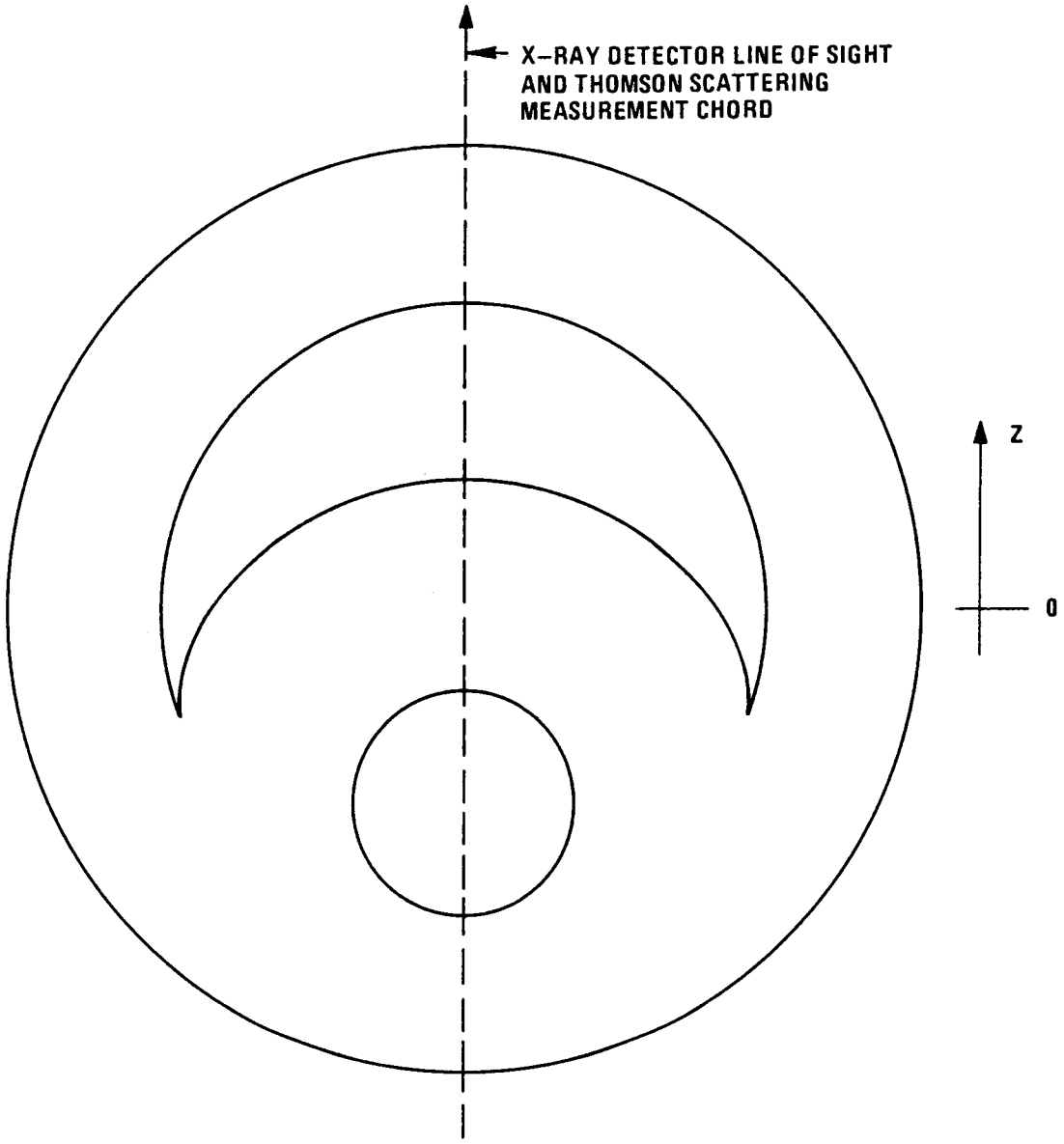

Figure 5.4. Magnetic islands for m = 1 instability.

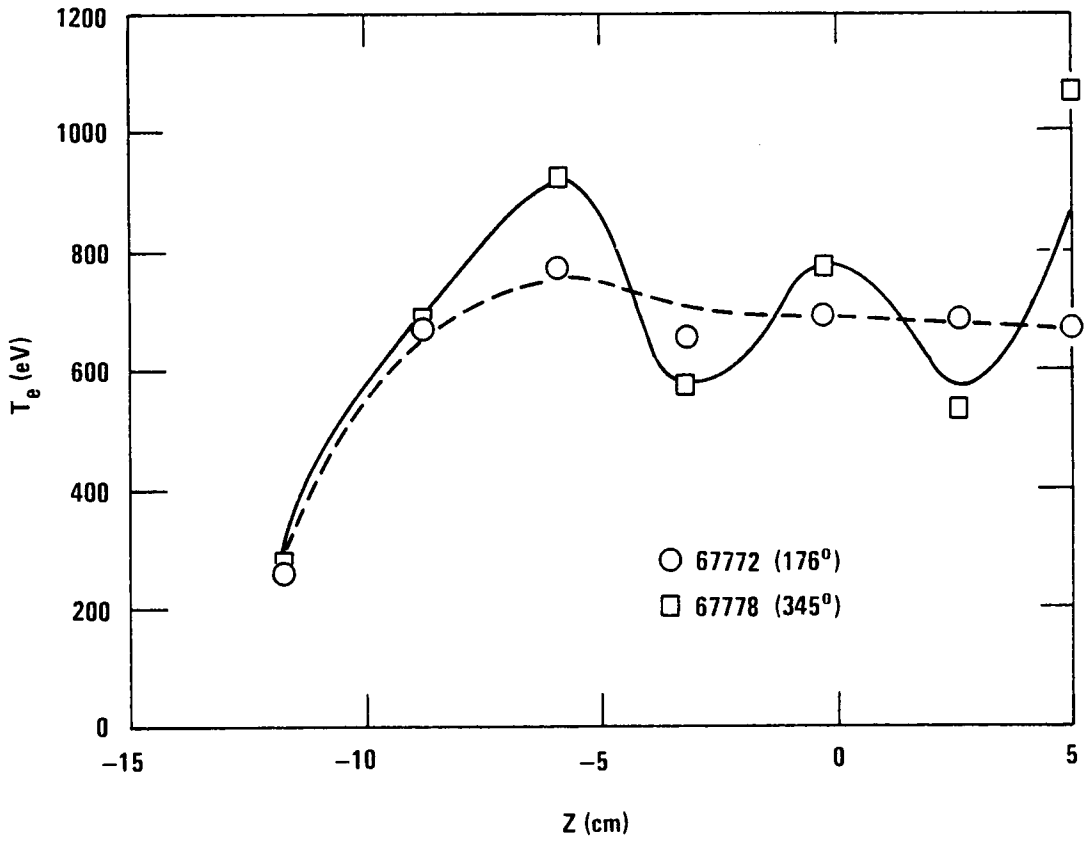

Figure 5.5. Temperature profiles for shots number 67772 and 67778.

5.2 Synchronization with m = 1 Oscillations Enabled by Sawtooth Phase

An example of this type of synchronization is shot number 67355. The sawteeth are clearly visible in the soft X-ray signal for this shot (Figure 5.6). The synchronization instrument was adjusted to begin sine synchronization after 70% of a sawtooth period, and the desired sine phase was set to 130°. An expanded view of the sawtooth, the sawtooth markers, and the fire laser pulses are shown in Figure 5.7. The sawtooth period exhibits some variations, as does the shape of the sawtooth, but the synchronization instrument reliably produced triggering pulses once the sawtooth derivative threshold was properly set. In order to observe the phase of the m = 1 oscillation when the laser was Q-switched, yet another view is needed. In Figure 5.8, the laser-fired pulse is superimposed upon the X-ray signal and the actual phase is 115°.

For this series of tokamak discharges, the variation in T_e due to m = 1 MHD activity was less than the accuracy of the Thomson scattering measurement, and no pattern of variation of the temperature profiles was discernible.

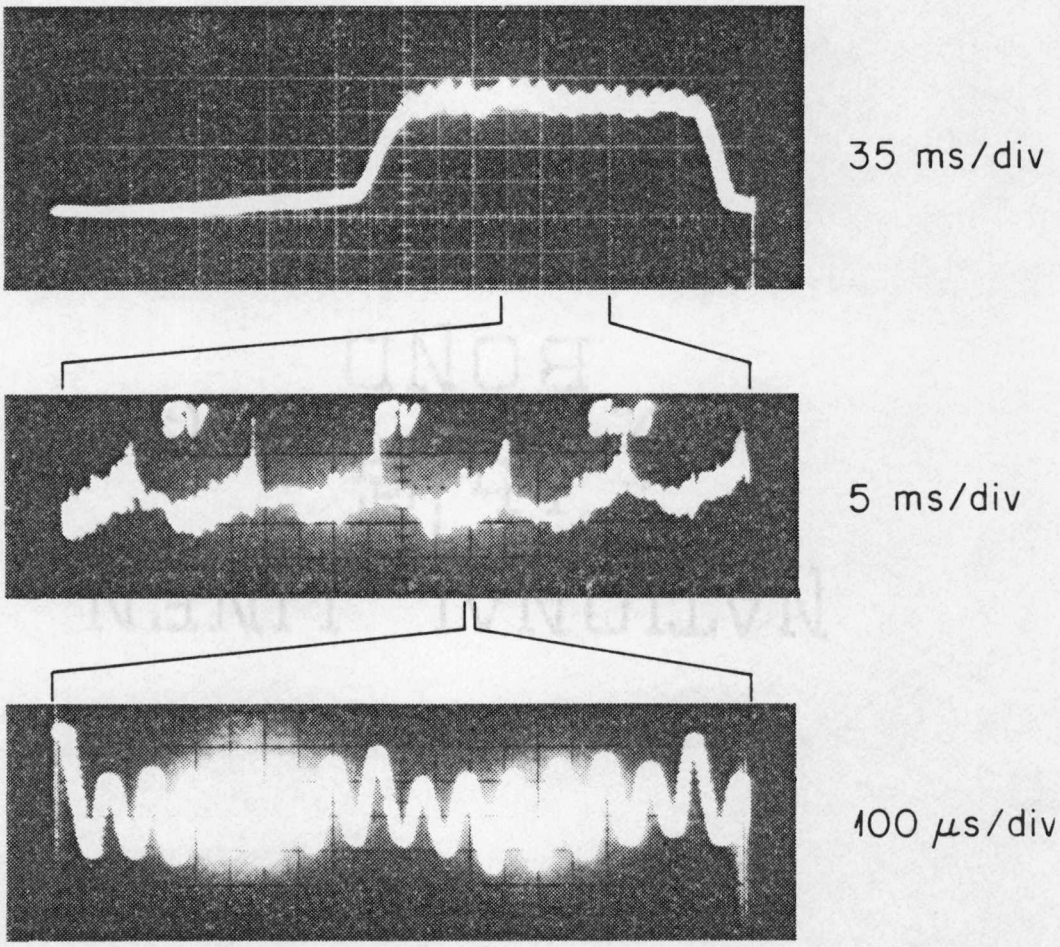

Figure 5.6. Soft X-ray signal for shot number 67355.

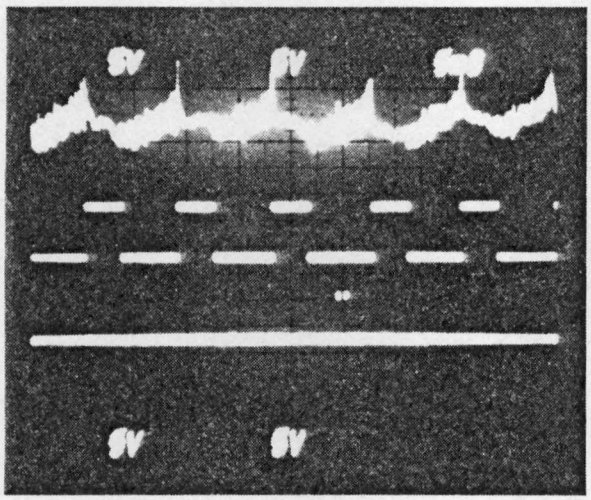

Figure 5.7. Sawtooth and synchronization waveforms for shot number 67355.

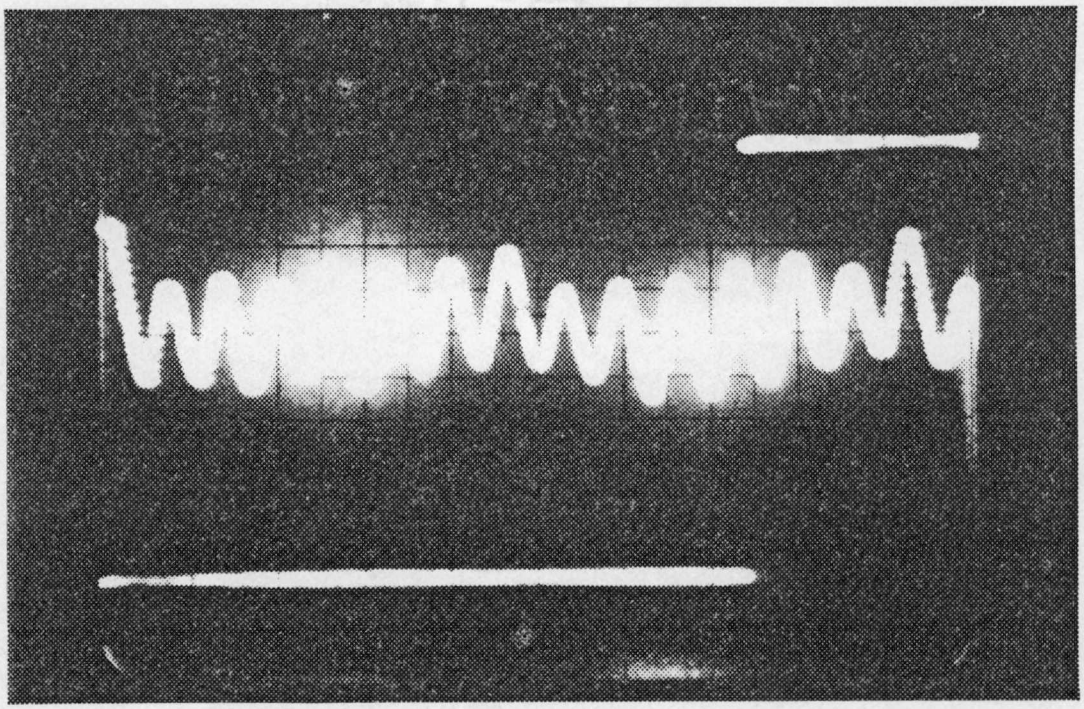

Figure 5.8. Soft X-ray signal and laser-fired pulse for shot number 67355.

CHAPTER 6

CONCLUSIONS AND SUGGESTIONS FOR FURTHER WORK

The synchronization instrument was able to fire the Thomson scattering laser in synchronism with the desired types of waveforms with sufficient phase accuracy. Under test conditions, it was able to synchronize with sawteeth ranging in period from 2 to 50 ms with an accuracy of $\pm 7°$ and with sine waves ranging from 1 to 30 kHz with an error less than 15°. The filtering circuits of the synchronization instrument allow successful synchronization with signals having signal-to-noise ratios as low as unity. Under actual operating conditions, the instrument was able to reliably fire the laser in synchronism with the signal and was successfully used to investigate oscillatory plasma behavior.

Use of the instrument revealed several features that could be added. It would be useful if the gain settings and sawtooth trigger level were computer controllable, because this would allow all front panel adjustments to be made remotely. Another improvement would be to add circuitry that would indicate to the computer which adjustments are in the manual mode and would allow it to read the manual adjustment settings.

For sine synchronization, the phase accuracy of the instrument is limited by the step size between the filter adjustment points. This accuracy could probably be improved by use of a different filter structure. One obvious possibility is the same type of filter with more adjustment points, but the same type of filter with the control circuits and resistor trees replaced by some type of analog control using a field-effect transistor for the variable resistor might prove superior because it would feature continuously variable filter tuning.

LIST OF REFERENCES

LIST OF REFERENCES

1. R. R. Kindsfather et al., "SCATPAK II: A Two-Dimensional Thomson Scattering System on ISX-B," internal correspondence, Oak Ridge Natl. Lab., Sept. 13, 1984.
2. B. A. Carreras et al., *MHD Activity in the ISX-B Tokamak: Experimental Results and Theoretical Interpretation*, ORNL/TM-8648, Oak Ridge Natl. Lab., June 1983.
3. M. Gerassimenko, R. Petrasso, F. H. Seguin, and J. Ting, "An Instrument for Synchronizing Plasma Diagnostic Measurements with Tokamak Internal Disruptions," *Rev. Sci. Instrum.* **53**(4), 432–35 (1982).
4. J. V. Wait, L. P. Huelsman, and G. A. Korn, *Introduction to Operational Amplifier Theory and Applications*, McGraw-Hill, New York, 1975, pp. 278–83.
5. *IEEE Standard Modular Instrumentation and Digital Interface System (CAMAC)*, IEEE Std 583-1975, Instruments and Detectors Committee of the IEEE Nuclear and Plasma Sciences Society, 1975.
6. Standard Engineering Corp., *WW-006 CAMAC Prototype Module*, Fremont, Calif., October 1981.
7. J. L. Dunlap et al., "Magnetohydrodynamic Instability with Neutral-Beam Heating in the ISX-B Tokamak," *Phys. Rev. Lett.*, **48**, 538 (1982).
8. S. von Goeler, W. Stodiek, and N. Sauthoff, "Studies of Internal Disruptions and m = 1 Oscillations in Tokamak Discharges with Soft X-ray Techniques," *Phys. Rev. Lett.*, **33**, 1201 (1974).

APPENDIXES

APPENDIX A

FILTER DESIGN PROGRAM

The following FORTRAN program was used to calculate resistor values for the bandpass filter sections.

```
C     PROGRAM TO DETERMINE R2 VALUES FOR BANDPASS FILTER
C
C     ALAN WINTENBERG   2/24/84
C
      CHARACTER*1 FTYPE
      IU=6
      TYPE *,'ENTER 1 FOR TERMINAL DISPLAY, 2 FOR FILE'
      ACCEPT *,K
      IF(K .NE. 1) IU=30
   10 TYPE *,'ENTER R1, R5, C3, C4'
      ACCEPT *,R1,R5,C3,C4
      TYPE *,'ENTER THE FILTER RANGE '
      ACCEPT *,IR
      TYPE *,'ENTER THE FILTER TYPE    A OR B'
      ACCEPT 40,FTYPE
   40 FORMAT(A1)
      GAIN=R5/(R1*(C4/C3+1.0))
      DT=0.50*2.0**(IR-1)
      IF(FTYPE .EQ. 'A') TL=16.25*2.0**(IR-1)
      IF(FTYPE .EQ. 'B') TL=24.25*2.0**(IR-1)
      WRITE(IU,42)IR,FTYPE
   42 FORMAT(//10X,'BANDPASS FILTER RANGE',I3,A1//)
      WRITE(IU,44)R1,R5
   44 FORMAT(5X,'R1 = ',F10.1,5X,'R5 = ',F10.1)
      WRITE(IU,46)C3,C4
   46 FORMAT(5X,'C4 = ',E10.4,5X,'C4 = ',E10.4/)
      WRITE(IU,48)GAIN
   48 FORMAT(5X,'GAIN = ',F5.2/)
      WRITE(IU,50)
   50 FORMAT(7X,'R CODE',10X,'TC',10X,'R2',10X,'Q'/)
      DO 100 I=1,16
      II=I-1
      TCU=TL+DT*II
      TC=TCU*1.0E-6
      A=(TC/(6.2832*SQRT(R5*C3*C4)))**2/R1
      R2=(R1*A)/(1-A)
      Q=R5*(C3*C4)/(C3+C4)*6.2832/TC
      WRITE(IU,90)II,TCU,R2,Q
```

```
 90 FORMAT(9X,I2,8X,F8.2,4X,F8.1,5X,F6.2)
100 CONTINUE
    WRITE(IU,110)
110 FORMAT(//5X,'R IN OHMS, C IN FARADS AND T IN MICROSECONDS')
    TYPE *,'ENTER 1 TO STOP, 2 TO CONTINUE'
    ACCEPT *,K
    IF(K .NE. 1)GO TO 10
    STOP
    END
```

The following material is an example of the output from the filter design program.

BANDPASS FILTER RANGE 2A

R1 = 10000.0 R5 = 42200.0
C4 = 0.1000E-08 C4 = 0.1000E-08
GAIN = 2.11

R CODE	TC	R2	Q
0	32.50	676.9	4.08
1	33.50	722.3	3.96
2	34.50	769.4	3.84
3	35.50	818.4	3.73
4	36.50	869.2	3.63
5	37.50	921.9	3.54
6	38.50	976.6	3.44
7	39.50	1033.3	3.36
8	40.50	1092.1	3.27
9	41.50	1153.0	3.19
10	42.50	1216.0	3.12
11	43.50	1281.3	3.05
12	44.50	1349.0	2.98
13	45.50	1419.0	2.91
14	46.50	1491.4	2.85
15	47.50	1566.4	2.79

R IN OHMS, C IN FARADS AND T IN MICROSECONDS

APPENDIX B

FILTER CALCULATIONS

The range of frequencies for which a second-order bandpass filter contributes only a small phase shift is related to the width of the passband. A derivation of the relationship is given here.

Recalling the transfer function for a second-order bandpass and substituting $j\omega$ for s gives

$$A(\omega) = \frac{\alpha\omega_c\omega}{\alpha\omega_c\omega + j(\omega^2 - \omega_c^2)} \quad . \tag{A-1}$$

The phase of $A(\omega)$, ϕ, is given by

$$\phi = -\arctan\left[\frac{\omega^2 - \omega_c^2}{\alpha\omega_c\omega}\right] \quad . \tag{A-2}$$

Define a phase passband by $\Delta\omega_1$ such that for frequencies ω the absolute value of the phase shift is less than ϕ_{max} if

$$\omega_c - \frac{\Delta\omega_1}{2} < \omega < \omega_c + \frac{\Delta\omega_1}{2} \quad . \tag{A-3}$$

Letting ω equal either extreme value and substituting into Eq. (A-2) and simplifying gives

$$\phi_{max} = \arctan \left(\frac{\pm \Delta\omega_1 \omega_c + \Delta\omega_1^2/4}{\alpha\omega^2 \pm \alpha\omega_c \Delta\omega_1} \right) . \tag{A-4}$$

If $\Delta\omega_1$ is restricted to be much less than ω_c, then

$$\phi_{max} = \arctan \left(\frac{\Delta\omega_1}{\alpha\omega_c} \right) . \tag{A-5}$$

Because ϕ_{max} is restricted to small angles and because for small x

$$\tan x \simeq x \ , \tag{A-6}$$

then

$$\phi_{max} \simeq \frac{\Delta\omega_1}{\alpha\omega_c} . \tag{A-7}$$

Because α is the inverse of Q, Eq. (A-7) can be simplified to

$$\Delta\omega_1 \simeq \frac{\phi_{max}\omega_c}{Q} . \tag{A-8}$$

Using the definition of Q and simplifying gives

$$\Delta\omega_1 \simeq \phi_{max}\Delta\omega \ . \qquad \text{(A-9)}$$

Equation (A-9) shows that the phase passband is a small part of the signal passband if a small maximum phase shift is required.

APPENDIX C

SYNCHRONIZATION CONTROL SOFTWARE

The following FORTRAN program and subroutines are used to control the synchronization instrument.

```
C         J. W. HALLIWELL
C
C         7-23-84
C         PROGRAM TO LOAD DATA TO SYNCHRONIZATION INSTRUMENT
C         AND TO WRITE DATA TO A FILE OR TO THE TERMINAL
C         FROM THE SYNCHRONIZATION INSTRUMENT
C
C
      CHARACTER ISECTION*1
      REAL LASPRE
      INTEGER*4 SAWDAT,SINDAT,OPCODE,ADRS,FUNC
      INTEGER*4 FILCOD,PRESET
C
C         CLEAR AND DISABLE LAM
C
      ISTAT=CAM$PIO('TSD$SYNCHMOD',0,9,0)
      ISTAT=CAM$PIO('TSD$SYNCHMOD',0,24,0)
C
C         CLEAR SCALER
C
      CALL NEWPAG
      ISTAT=CAM$PIO('TSD$SYNSCAL',0,9,0)
C
C         PRESET SINE AND SAWTOOTH PARAMETERS
C
      SAWPER= 50
      SINDEG= 90
      SINDAT=IFIX(256*(SINDEG/360))
      SAWDAT=IFIX(256*(SAWPER/200))
      INITSY=SINDAT+(SAWDAT*256)
      ISTAT=CAM$PIO('TSD$SYNCHMOD',2,16,.NOT.INITSY)
C
C         PRESET FILTER TO 100 USEC
C
      ISTAT=CAM$PIO('TSD$SYNCHMOD',0,16,.NOT.400)
C
C         SET OP CODE TO 1
C
```

```
      ISTAT=CAM$PIO('TSD$SYNCHMOD',1,16,.NOT.1)
30    CALL NEWPAG
C
C        SAVE LAST SINE PERIOD VALUE
C
      LASPRE=SINPER
C
C        READ AND DECODE DATA FROM ADDRESS 1

C        IN SYNCH MODULE
C
      ISTAT=CAM$PIO('TSD$SYNCHMOD',1,0,IDATAO)
C
C        SINE PERIOD=     IADAT
C        OP CODE=         ICDAT
C        FILTER CODE=     IDDAT
C
      IBDAT=IDATAO/65536
      IADAT=IDATAO-IBDAT*65536
      IDDAT=IBDAT/16
      ICDAT=IBDAT-IDDAT*16
      OPCODE=ICDAT
      SINPER=FLOAT(IADAT)/4.0
      FILCOD=IDDAT/2
      FILCOD=FILCOD+1
      ISECT=MOD(IDDAT,2)
C
C        DISPLAY MAIN MENU TO SCREEN
C
      TYPE*,'              ***  MAIN MENU  ***'
      TYPE 10
10    FORMAT('================================================',/)
      TYPE 80,OPCODE
80    FORMAT(' OP CODE=',I2)
      TYPE 81,SAWPER,SINDEG
81    FORMAT (' SAWTOOTH % =',F5.1,5X,'SINE PHASE=',F5.1)
      IF (ISECT.EQ.0) ISECTION='A'
      IF (ISECT.EQ.1)ISECTION='B'
      TYPE 84,LASPRE
84    FORMAT(' LAST SINE PERIOD=',F9.2)
      TYPE 82,SINPER,FILCOD,ISECTION
82    FORMAT(' PRESENT SINE PERIOD=',F9.2,' (USEC)',5X,
     *'FILTER= ',I1,5X,'SECTION= ',A1)
      TYPE 20
20    FORMAT(' ENTER',T30,'TO:',/)
C
C
```

```
      TYPE*,'A-----------------------SET OPERATION CODE'
      TYPE*,'B-----------------------SET SAWTOOTH PHASE PERCENT'
      TYPE*,'C-----------------------SET SINE PHASE DEGREES'
      TYPE*,'D-----------------------PRESET FILTER PERIOD (USEC)'
      TYPE*,'E-----------------------GENERATE MASTER CLEAR'
      TYPE*,'F-----------------------READ I/O MODULE'
      TYPE*,'G-----------------------READ SCALER TIMES'
      TYPE*,'H-----------------------WRITE DATA TO FILE'
      TYPE*,'I-----------------------EXIT PROGRAM'
C
C
C        READ ANSWER FROM USER
C
      ACCEPT 83,ANSWR
83    FORMAT(A1)
C
C
C
25    IF (ANSWR.EQ.1HA) THEN
         TYPE*,' ENTER OPERATION CODE  1=  SAWTOOTH ONLY'
         TYPE*,'                       2=  SAWTOOTH AND SINE'
         TYPE*,'                       3=  SINE ONLY'
         READ(5,110)OPCODE
110      FORMAT(I1)
         IF (OPCODE.LT.1.OR.OPCODE.GT.3) GO TO 25
         FUNC=16
         ADRS=01
         IOPCODE=OPCODE
         ISTAT=CAM$PIO('TSD$SYNCHMOD',ADRS,FUNC,.NOT.IOPCODE)
         GO TO 30
      END IF
C
C
C
27    IF (ANSWR.EQ.1HB) THEN
         TYPE*,' ENTER SAWTOOTH PHASE PERCENT (0-200%)'
         ACCEPT*,SAWPER
         IF (SAWPER.LT.0..OR.SAWPER.GT.200.) THEN
            TYPE*,' VALUE OUT OF RANGE'
            GO TO 27
         END IF
         IF (SAWPER.LT.10.) SAWPER=SAWPER+100.0
         GO TO 4000
      END IF
C
C
C
```

```
29     IF (ANSWR.EQ.1HC) THEN
          TYPE*,' ENTER SINE PHASE IN DEGREES'
          ACCEPT*,SINDEG
          IF (SINDEG.GT.355..OR.SINDEG.LT.0.) THEN
             TYPE*,' VALUE OUT OF RANGE'
             GO TO 29
          END IF
          IF (SINDEG.LT.5.) SINDEG=5.0
          GO TO 4000
       END IF
       GO TO 31
C
C
C
4000   FUNC=16
       ADRS=02
       SINDAT=IFIX(256*(SINDEG/360))
       SAWDAT=IFIX(256*(SAWPER/200))
       IDATAIN=SINDAT+(SAWDAT*256)
       ISTAT=CAM$PIO('TSD$SYNCHMOD',ADRS,FUNC,.NOT.IDATAIN)
       GO TO 30
C
C
C
31     IF (ANSWR.EQ.1HD) THEN
          TYPE*,' ENTER FILTER PRESET IN USEC'
          ACCEPT 1010,PRESET
1010   FORMAT(I)
          IF (PRESET.LT.16..OR.PRESET.GT.4000.) THEN
             TYPE*,' VALUE OUT OF RANGE'
             GO TO 31
          END IF
          FUNC=16
          ADRS=0
          IPRESET=PRESET*4
          ISTAT=CAM$PIO('TSD$SYNCHMOD',ADRS,FUNC,.NOT.IPRESET)
          GO TO 30
       END IF
C
C
C
       IF (ANSWR.EQ.1HE) THEN
          TYPE*,' GENERATING CLEAR SIGNAL'
C
C         CLEAR SCALER
C
          ISTAT=CAM$PIO('TSD$SYNSCAL',0,9,0)
C
```

```
C         CLEAR SYNCHER
C
          ISTAT=CAM$PIO('TSD$SYNCHMOD',0,9,0)
          GO TO 30
        END IF
C
C
C
41      IF (ANSWR.EQ.1HF) THEN
          TYPE*,'READING DATA'
          IUNIT=5
          CALL SYNREAD(IUNIT)



          ACCEPT 200,IDUM
          GO TO 30
        END IF
C
C
C
        IF (ANSWR.EQ.1HG) THEN
          TYPE*,'READING TIMES FROM SCALER'
          IUNIT=5
          CALL SYNTIME(IUNIT)
          ACCEPT 200,IDUM
200       FORMAT(A)
          GO TO 30
        END IF
C
C
C
        IF (ANSWR.EQ.1HH) THEN
          TYPE*,' OUTPUTING DATA'
          CALL SYNDATA(LASPRE)
          GO TO 30
        END IF
C
C
C
        IF (ANSWR.EQ.1HI) THEN
          GO TO 5000
        END IF
40      GO TO 30
5000    STOP
        END
```

```
C
C
C
C       J. W. HALLIWELL        7-27-84
C
C       SUBROUTINE TO READ DATA FROM THE SYNCHRONIZATION
C       INSTRUMENT AND TO WRITE THIS DATA TO UNIT= IUNIT
C
      SUBROUTINE SYNREAD(IUNIT)
      INTEGER*4 ADRS,DATAOUT,IERR(24),FILCODE
      CHARACTER DESCR(24)*20,ISECTION*1
C
C       LOAD LABELS FOR ERROR STATUS REGISTER CHANNELS
C
      DESCR(1)='ERROR FIRE F        '
      DESCR(2)='ERROR FIRE Q        '
      DESCR(3)='TIMEOUT ERROR       '
      DESCR(4)='UPDATE FILTER       '
      DESCR(5)='FIRE Q LAST CHANCE  '
      DESCR(6)='DONE                '
      DESCR(7)='FILT. CONTR. OVERFL '
      DESCR(8)='SAWTOOTH OVERFLOW   '
      DESCR(9)='FIRE Q              '
      DESCR(10)='FIRE F              '
C
C       REMAINING CHANNELS NOT IN USE
C       LABEL AS SUCH
C
      DO 200 I=11,24
      DESCR(I)='NOT IN USE'
200   CONTINUE
C
C       READ AND DECODE ADDRESS 1 FROM SYNCH MODULE
C
      ADRS=1
      ISTAT=CAM$PIO('TSD$SYNCHMOD',ADRS,0,DATAOUT)
C
C       SINE PERIOD=   IADAT
C       OPCODE=        ICDAT
C       FILTER CODE=   IDDAT
C
      IBDAT=DATAOUT/65536
      IADAT=DATAOUT-IBDAT*65536
      IDDAT=IBDAT/16
      ICDAT=IBDAT-IDDAT*16
      SINPER=FLOAT(IADAT)/4.0
      FILCODE=(IDDAT/2)+1
      ISECT=MOD(IDDAT,2)
```

```
      IF (ISECT.EQ.0)ISECTION='A'
      IF (ISECT.EQ.1)ISECTION='B'
      IADAT=IADAT/4
      WRITE (IUNIT,45)ICDAT
45    FORMAT(' OP CODE= ',I4)
      WRITE(IUNIT,40)SINPER,FILCODE,ISECTION
40    FORMAT(' PRESENT SINE PERIOD=  ',F9.2,' (USEC)',5X,
     $'FILTER= ',I1,5X,'SECTION= ',A1,//)
C
C        READ ADRS 2 FOR ERRORS AND STATUS
C
      ADRS=2
      ISTAT=CAM$PIO('TSD$SYNCHMOD',ADRS,0,IDAT)
C
C        ONLY 10 BITS IN USE AT THIS TIME
C
      DO 60 I=1,24
      J=25-I
      EXP=24-FLOAT(I)
      IERR(J)=IDAT/2**EXP
      IERR(J)=MOD(IERR(J),2)
60    CONTINUE
      WRITE(IUNIT,50)
50    FORMAT(' STATUS FLAGS')
      WRITE(IUNIT,62)
62    FORMAT(' FUNCTION',T30,'STATUS')
C
      KXX=10
C             WHERE KXX REPRESENTS THE NUMBER
C             OF STATUS CHANNELS IN USE
C
      DO 80 I=1,KXX
      WRITE(IUNIT,90)DESCR(I),IERR(I)
90    FORMAT(2X,A20,T32,I2)
80    CONTINUE
      RETURN
      END
C
C
C
C        J. W. HALLIWELL        67-27-84
C
C        SUBROUTINE TO READ SCALER TIMES
C
      SUBROUTINE SYNTIME(IUNIT)
      INTEGER*4 ITIME(12)
      REAL TIME(12)
C
```

```
C        READ SCALER CHANNELS
C
      DO 10 I=1,12
      J=I-1
         ISTAT=CAM$PIO('TSD$SYNSCAL',J,0,ITIME(I))
10    CONTINUE
C
C        CONVERT ITIME TO REAL VARIABLE
C        AND DIVIDE RAW DATA BY 1000 TO MAKE
C        READINGS IN MILLISECONDS
C
      DO 20 I=1,12
         J=I-1
         TIME(I)=(FLOAT(ITIME(I)))/1000
         WRITE(IUNIT,30)J,TIME(I)
30       FORMAT(' SCALER CHAN. # ',I2,'= ',F10.3)
20    CONTINUE

C        CLEAR SCALER AFTER READING
C
      ISTAT=CAM$PIO('TSD$SYNSCAL',0,9,0)
      RETURN
      END
C
C
C
C        J. W. HALLIWELL        7-27-84
C
C        SUBROUTINE TO READ DATA FROM THE SYNCHRONIZATION
C        INSTRUMENT AND THE SCALER AND WRITE DATA FILE
C
      SUBROUTINE SYNDATA(LASSINE)
      CHARACTER SHOTNUM*5,FILOUT*11
      INTEGER*4 ISTATUS
      REAL TIME(12),LASSINE
C
C
C        READ SHOT NUMBER AND OPEN OUTPUT FILE
C
C
C        CONNECT WITH SAMS
C
      ISTATUS=ISX$INIT('TSD',ISTAT)
C
C        WAIT ON END OF SHOT AND MAKE DATA FILE
C
      ISTATUS=ISX$SHOT ENDW(ISHOT,IDATT,ITIM)
C
```

```
C        CONVERT ISHOT FROM INTEGER TO CHARACTER
C        ALSO ADD PREFIX AND SUFFIX TO MAKE FILE NAME
C        SYXXXXX.DAT =  FILOUT
C
      ENCODE(11,498,FILOUT)ISHOT
498   FORMAT('SY',I5,'.DAT')
C
C        OPEN DATA FILE
C
      IUNIT=6
      OPEN(UNIT=6,FILE=FILOUT,STATUS='NEW')
C
C        WRITE SHOT NUMBER AT TOP OF FILE
C
      WRITE(IUNIT,100)ISHOT
100   FORMAT(' SHOT NUMBER= ',I6)
C
C        WRITE LAST SINE PERIOD TO FILE
C
      WRITE(IUNIT,101)LASSINE
101   FORMAT(' PREVIOUS SHOT SINE PERIOD= ',F9.2)
C
C        CALL SUBROUTINE TO READ DATA FROM SYNCH MODULE
C        UNIT=6
C
      CALL SYNREAD(IUNIT)
C
C        CALL SUBROUTINE TO READ DATA FROM SCALER
C        UNIT=6
C
      CALL SYNTIME(IUNIT)
      CLOSE(UNIT=6,STATUS='SAVE')
      RETURN
      END
```

The following material is an example of the data file created by the software for each synchronization.

```
SHOT NUMBER=   67772
FILTER= 2     SECTION= A
PREVIOUS SHOT SINE PERIOD=     96.0
SINE PERIOD=      80
OP CODE=     3


STATUS FLAGS
FUNCTION                      STATUS
 ERROR FIRE F                   0
 ERROR FIRE Q                   0
 TIMEOUT ERROR                  0
 UPDATE FILTER                  1
 FIRE Q LAST CHANCE             0
 DONE                           1
 FILT. CONTR. OVERFL            0
 SAWTOOTH OVERFLOW              0
 FIRE Q                         1
 FIRE F                         1
SCALER CHAN. #  0=    249.995
SCALER CHAN. #  1=    250.018
SCALER CHAN. #  2=      0.000
SCALER CHAN. #  3=    250.824
SCALER CHAN. #  4=    249.995
SCALER CHAN. #  5=    250.018
SCALER CHAN. #  6=      0.000
SCALER CHAN. #  7=    250.338
SCALER CHAN. #  8=      0.000
SCALER CHAN. #  9=      0.000
SCALER CHAN. # 10=      0.000
SCALER CHAN. # 11=      0.000
```

VITA

Alan L. Wintenberg was born in Oak Ridge, Tennessee, on June 30, 1958. He was graduated from Oak Ridge High School in June 1976 and attended The University of Tennessee, Knoxville, receiving the Batchelor of Science degree in Engineering Physics in June 1981 and the Master of Science degree with a major in Electrical Engineering in December 1984.