August 14, 1963

To the Graduate Council:

I am submitting herewith a dissertation written by Arthur Allen Mason entitled "An Examination of the Far Infrared Spectrum of Hydrogen Fluoride." I recommend that it be accepted in partial fulfillment of the requirements for the degree of Doctor of Philosophy, with a major in Physics.

Major Professor

We have read this dissertation
and recommend its acceptance:

R. J. Lovell

W. E. Deeds

William K. Estes

Accepted for the Council:

Dean of the Graduate School

AN EXAMINATION OF THE FAR INFRARED SPECTRUM OF HYDROGEN FLUORIDE

A Dissertation

Presented to

the Graduate Council of

The University of Tennessee

In Partial Fulfillment

of the Requirements for the Degree

Doctor of Philosophy

---

by

Arthur Allen Mason

August 1963

ACKNOWLEDGEMENT

The following text was accepted by the Graduate School of The University of Tennessee as a dissertation for the degree of Doctor of Philosophy in Physics. Since the major portion of this work was done under a contract with the Office of Aerospace Research, United States Air Force, the complete dissertation is being submitted as a technical report.

With deep appreciation the author wishes to thank Dr. Alvin H. Nielsen, who directed this dissertation, for his many valuable suggestions, unfailing interest, and kind encouragement throughout the course of graduate study.

The writer also wishes to thank Dr. R. J. Lovell, Dr. W. E. Deeds, Mr. H. R. Mink, Mr. P. W. Elliott, and Miss H. V. Burnette of The University of Tennessee Physics Department, and Dr. W. H. Fletcher of The University of Tennessee Chemistry Department for their valuable assistance in various phases of this investigation. For much of the calculation and the computer programming, the author is indebted to Mr. H. J. Hargis and Mr. A. Hume.

Finally, to the author's parents -- a most heartfelt "Thanks."

557116

TABLE OF CONTENTS

CHAPTER		PAGE
I.	INTRODUCTION	1
	History	1
	The Problem	3
II.	TECHNIQUES OF THE FAR INFRARED	5
	General Considerations	5
	The Monochromator	7
	The Filtering Problem	8
	Filtering Techniques	10
	Transmission filters	11
	Reflection filters	12
	Crystal choppers	16
	Focal isolation	17
	Christiansen filters	17
	Detectors	19
	Elimination of Water Vapor	22
III.	DESCRIPTION OF THE SPECTROMETER	24
	Design Considerations	24
	Physical Features	26
	Optical System	31
	Grating	31
	Filtering components	35

CHAPTER PAGE

III. (Continued)

Sources. 38

Detectors. 40

Performance. 40

IV. EXPERIMENTAL MEASUREMENTS. 43

The Far Infrared Spectrometer. 43

Instrumental difficulties. 43

Change of spectral region. 43

Water absorption 44

Scattered light. 45

Heating. 47

Miscellaneous. 48

Gas Handling system and absorption cells 49

Calibration techniques 50

Data taking and handling 53

Scanning techniques. 53

Determination of line center 54

Determination of base line and zero line 54

Instrumental broadening. 56

Operating conditions 57

The Vacuum Grating Spectrometer. 59

Modifications. 62

Chopper. 62

Elevator 63

CHAPTER PAGE

IV. (Continued)

Filtering. 64

Nitrogen cooling system. 65

Experimental difficulties. 65

Teflon gaskets 65

Effect of source on windows. 67

Effect of CO on the windows. 69

Effect of pressure and temperature on windows. 70

Other heating effects. 71

Operating conditions 72

Calibration. 73

Data taking and handling 75

V. ABSORPTION FREQUENCIES 77

Theory 77

Line Positions 79

Spectroscopic constants. 84

Pressure shifts. 84

VI. LINE INTENSITIES 86

Theory 86

General considerations 86

Line strength. 86

Equivalent width and working assumptions 88

The method of equivalent widths. 90

Data Reduction 94

General. 94

CHAPTER PAGE

VI. (Continued)

Equivalent widths. 96

Linear region. 98

The short cell 101

Square root region 102

Determination of line strengths and half widths. 105

VII. SUMMARY AND SUGGESTIONS FOR FUTURE RESEARCH. 111

Summary. 111

Suggestions for Future Research. 113

BIBLIOGRAPHY 116

APPENDIX 119

LIST OF TABLES

TABLE		PAGE
I.	Transmission Filters	13
II.	Reststrahlen	14
III.	Crystal Choppers	18
IV.	Christiansen Filters	20
V.	Filtering System	39
VI.	Vacuum Wave Numbers of the Pure Rotation Spectrum of Hydrogen Fluoride	81
VII.	Collected Values of HF Pure Rotation Line Centers	82
VIII.	The Rotational Constants of Hydrogen Fluoride	85
IX.	Line Parameters	97
X.	Comparison of Line Strengths Calculated from Rigid Rotor Approximation with Line Strengths Measured Under Absorption Coefficient Curve	104
XI.	Line Strengths and Half Widths for Some Pure Rotational Lines	108
XXII Through XXV	Spectral Line in Terms of Per Cent Absorption and k for Some Pure Rotational Transitions	119

LIST OF FIGURES

FIGURE		PAGE
1.	View of the Far Infrared Spectrometer and Auxiliary Equipment	27
2.	Scans of the 325 cm^{-1} Region Showing Effectiveness of the Drying	29
3.	Ray Diagram of the Far Infrared Spectrometer	32
4.	Closeup View of the Far Infrared Spectrometer	34
5.	The Filter Wheel	37
6.	Scan of the Atmospheric Water Vapor Spectrum Between 23 μ and 30 μ	42
7.	The 9.695 cm Cell	51
8.	Scans of Central Image in Three Spectral Regions	58
9.	Optical Scheme for Getting Radiation to the Grating Monochrometer	60
10.	Ray Diagram of the Grating Monochromator	61
11.	The 17.653 cm Cell	68
12.	Variation of Per Cent Absorption, Absorption Area, and Half-Width of J(3) with Pressure	91
13.	Scan of J(1) at 2.5 cm Hg Showing Influence of Wing Absorption	93
14.	Plot of Equivalent Width vs. Pressure for Lines J(3) - J(8)	99
15.	Plot of Equivalent Width vs. Pressure for Lines J(11) - J(15)	100
16.	Plots of Line Strength vs. Transition	109

CHAPTER I

INTRODUCTION

I. HISTORY

The absorption or emission of electromagnetic radiation from 15 μ to 1000 μ is caused by energy changes in the rotations or the skeletal vibrations of molecules. This wavelength range is known as the far infrared spectral region and has in recent years become the object of extensive experimental activity. Much of the activity may be attributed to an increased awareness of the need for information which cannot be obtained elsewhere; to improved instrumentation and techniques; and to a natural desire to bridge the gap between the infrared and the microwave regions.

A bibliography of the far infrared compiled by Palik (1960) impressively indicates that the early history of the long wavelength region, from 1895 to 1920, is the history of the investigations of Heinrich Rubens and his co-workers. Their efforts were directed toward the determination of wavelengths, reflection, and transmission factors, index of refraction measurements, and polarization studies on a wide variety of materials such as quartz, mica, fluorite, rock-salt, crown glass, and sulfur (Rubens and Nichols, 1897). Many of their results were immediately applied to new instrumentation and used for further research. For example, the discovery of suitable

window materials while using the bolometer as a detector made possible the replacement of the bolometer by the more sensitive torsion radiometer.

Following Rubens a host of investigators led by Czerny, Badger, Cartwright, Strong, Randall, and Barnes further developed and improved the art of instrumentation; extended the applications; and refined the theory of the far infrared. Present day research is devoted to many kinds of physical phenomena such as the vibrations of long chain molecules found in polymers and organic substances, optical constants of liquids and solids, properties of semi-conductors, and magneto-optic effects in semi-conductors. These are in addition to extensive investigations on the pure rotational bands of gases.

Two of the most important examples in early years of observations on pure rotational spectra are those of M. Czerny (1927) on the hydrogen halides and R. M. Badger and C. H. Cartwright (1929) on ammonia. The first observations of hydrogen fluoride lines in the far infrared were reported in the paper by Czerny. Three lines were found lying between 45 μ and 125 μ. These lines were assigned to transitions in the ground state vibrational energy level between the rotational energy levels designated by the quantum numbers J(1) $\rightarrow$ J(2), J(3) $\rightarrow$ J(4), and J(4) $\rightarrow$ J(5). The pure rotational spectrum of HF then lay dormant until D. F. Smith and A. H. Nielsen (1956) concluded observations on lines corresponding to transitions originating with rotational levels J(10) through J(15) lying between 15 μ and 25 μ. Their frequency data were used in conjunction with data by Kuipers (1956),

obtained in the fundamental vibration-rotation band, to determine the rotational constants of the hydrogen fluoride molecule.

For a few molecules such as NH_3 and OCS, studies have been made in the microwave region of intensities, shapes, and widths of lines in pure rotational spectra (Bleaney and Penrose, 1948; Johnson and Slager, 1952). The tremendous resolving power of spectrometers working in this region makes possible the direct determination of true line shapes. Investigations recently completed in this laboratory (Herget, 1962) have demonstrated that with high resolution and a precisely measured slit function it is possible to measure directly the shapes and widths of individual lines of the HF fundamental band in the near infrared.

II. THE PROBLEM

Complementary to the work of Herget it was felt desirable to extend the investigation of HF intensities into the far infrared by making exploratory measurements on the individual lines of the pure rotational spectrum. Such measurements are inherently more difficult in the long wavelength region than in any other because spectrometers with resolution comparable to that obtained in the microwave or even the near infrared are not presently possible--primarily due to the minute amount of energy available for detection and the relatively few grating lines which can be illuminated. Further development of the interferometric method may, however, make possible resolution equal to near infrared in the future.

The purpose of the present investigation was to determine the frequencies, the ground state rotational constants, the intensities and the widths of as many of the pure rotational absorption lines of hydrogen fluoride as could be measured.

The experimental problem was two-fold:

1. The development of a far infrared spectrometer with which to carry out this and future long wavelength investigations at The University of Tennessee.

2. The measurement of the transmittance of the hydrogen fluoride pure rotational band as a function of frequency and pressure.

The frequencies of 17 pure rotational lines were measured, and from them the ground state rotational constants B_o, D_o, and H_o were evaluated. Equivalent width measurements resulted in intensity and half-width values on seven lines. In addition, lines arising from transitions between the higher J levels were examined for pressure dependence of their center frequencies at pressures varying from 15 cm Hg to 120 cm Hg.

CHAPTER II

TECHNIQUES OF THE FAR INFRARED

I. GENERAL CONSIDERATIONS

The experimental examination of the far infrared spectral region is primarily an optical problem and consequently involves many of the techniques of focusing, directing by mirrors, dispersing, and detecting of electromagnetic radiation which have been developed for the near infrared. There are, however, several important differences in spectrometers designed for the two regions. These differences are the direct result of attempts to solve the difficulties which beset the investigator of a region in which: (a) there is no satisfactory radiation source having the maximum of its energy distribution in the region of interest; (b) there is a shortage of materials of desirable physical and optical properties for use as windows and filters; and (c) the existing detectors do not have performance comparable to that of the best detectors of other regions.

The radiation sources presently available emit an extremely small amount of energy in the far infrared in comparison with the radiation emitted in the shorter wavelength region. Even a black body emits little energy beyond 30 μ, and band sources in which the radiation emitted is limited to the long wavelength region await development. The sources most frequently used are the Welsbach mantle, the Globar, and the high pressure mercury arc. The first of these is

essentially a hot filament coated with thoria. Originally the filament was a close mesh envelope of silk heated to incandescence by a gas flame; today it may be a strip of mesh platinum or even the quartz envelope of a mercury lamp. (Robinson, 1959). The mantle is most useful as a source at wavelengths less than 100 μ.

A second source which is useful below 100 μ is the Globar. It is a silicon carbide rod of about 1/4 inch in diameter and 2-1/2 inches long which is generally operated at 1500°K. The rod is sturdy and provides a stable source but it does require enclosure in a water jacket (Strong, 1939).

High pressure mercury lamps are presently the most suitable sources between 100 μ and 1000 μ (McCubbin, 1952). In these lamps the arc is in a fused quartz tube operating at several atmospheres pressure. Ultraviolet and visible radiation are intense from the lamp and the lamp should be shielded to protect the eyes of observers. The lamp is simple to mount and convenient to use and does not require cooling although the circulation of nitrogen about the electrodes will add to the life of the lamp (Plyler, 1958).

Two major problems arise as a result of the inadequacy of these sources: the acquisition and conservation of the energy in the region of interest; and the elimination of the intense short wavelength radiation. The solutions to these problems occasionally appear to border on art rather than science. For example, a reasonably efficient filter can be made by properly depositing a thin layer of turpentine soot

onto a suitable thickness of paraffin or even tissue paper and introducing it into the beam at a position where it will not melt or burn.

II. THE MONOCHROMATOR

The monochromator of a far infrared instrument must be either a grating or an interferometer because no suitable prism materials are available as dispersing elements beyond 50 μ. The interferometer offers the advantage of permitting the use of extremely wide slits thus acquiring a large amount of the available energy. It is also simple and relatively inexpensive in itself, but it requires a computer as an auxiliary tool because the output must undergo a Fourier transformation before a spectrum can be displayed. The fact that there is no direct presentation of spectra is often considered a disadvantage.

Diffraction gratings are more frequently used in the infrared and may be either the transmission or the reflection type. Much of the early work in the far infrared was done with wire transmission gratings (Barnes, 1934). Most modern instruments, however, are designed around a reflection monochromator in which the principal element is a plane diffraction grating in either a Littrow or an Ebert mounting. Such gratings are invariably of the echelette type in which the groove is flat and inclined at such an angle that the radiation examined is specularly reflected in the order of the diffraction used. Radiation of the wavelength studies is diffracted through a fixed angle and the spectrum is scanned by rotating the grating. Commercial gratings are available in sizes ranging from

2"x2" to 6"x10" and may be either precision replicas or originals. The original or master gratings are usually ruled with a diamond cutter on aluminum coated crown glass although gratings for the far infrared are frequently ruled on other metals such as polished blocks of magnesium. The replica gratings are formed from master gratings by molding the grooves in a very thin layer of clear plastic adhering to the surface of a glass backing plate and coating the optical surface with aluminum. For the longer wavelength regions ($\lambda > 300\ \mu$) sufficiently accurate gratings may be ruled on a milling machine by a competent machinist. Three gratings are presently in use in the Tennessee instrument. Two of these are original rulings and one a replica.

III. THE FILTERING PROBLEM

The use of a plane diffraction grating in a far infrared spectrometer satisfactorily solves the problem of dispersing the radiation with the greatest possible resolution. However, without proper filtering it introduces intolerable amounts of unwanted radiation into the detector section of the instrument through the process of overlapping orders.

The frequency of the radiation reflected at a given angle from a plane grating may be determined from the grating equation,

$$\nu = \frac{nk}{\sin \theta} \quad ,$$

where ν is the frequency in wave number;

n is the diffraction order, taking on integral values;

k is the grating constant;

θ is the angle from central image.

It is evident from this expression that the radiation observed at a particular angle θ is not monochromatic but consists of a multiple of frequencies each of whose values depend upon a different order number n. If, for example, black body radiation is incident upon a grating set at a particular angle θ, then the radiation reflected through the exit slit and into the detector section of the instrument is not of the single frequency ν, but includes as well radiation of frequencies 2ν, 3ν, etc. If it is radiation of frequency ν that one wishes to examine, then the higher order frequencies, 2ν, 3ν, etc. must be eliminated.

Although the problem of overlapping orders is not restricted to the far infrared, it is certainly more pronounced and its solution is much more difficult and less precise than in the short wavelength region, i.e., $\lambda < 15\ \mu$. Consider a source which is a 1000°K black body obeying Planck's radiation law. If it is desired to examine radiation at $4\ \mu$ in the first order, then the higher orders must be filtered. Second order light at $2\ \mu$ has about the same relative intensity and third, fourth, and higher orders are relatively less intense than the desired $4\ \mu$ energy so that the problem is one of filtering out radiation which is of comparable intensity to the wanted radiation. Suppose, however, that it is desired to examine radiation at $100\ \mu$ in the first order from this same source. The ratio of the unwanted to the wanted radiation may then be as high as 100,000 to 1.

The reduction of this unwanted radiation until it produces only one percent as much signal from the detector as the 100 u places special demands upon the filtering system.

When working in the near infrared, two methods of filtering of overlapping orders are commonly used. Either a prism or a suitable array of band-pass transmission filters may be placed in the optical path restricting the illumination of the grating to radiation of a frequency range so narrow that it does not contain overlapping orders. Since each of these methods depends upon favorable transmission properties of materials, neither is at present satisfactorily adaptable to the long wavelength region.

Another filtering technique useful to the near infrared and which future research may make available to the long wavelength is the principle of interference which is widely known and used in optics. Interference is to be expected whenever a beam of radiation is transmitted through a film of thickness comparable with the wavelength; radiation reflected by such a film may also show evidence of interference between components reflected by the front surface and those which suffer successive reflections at each surface.

The high reflection of metals is associated with absorption. Transparent dielectric films can be used, without absorption loss, to furnish high reflecting coefficients (Conn and Avery, 1960). A stack of quarter wave films each alternately of high and low refractive index ensures that beams reflected by the interfaces are all in

phase. The increased reflection is naturally associated with a sharpened spectral response.

Such interference filters have extensive application in the infrared. The great merit of these filters is that little radiant power is lost by absorption. There is no doubt that there are many applications in the infrared region for isolating a particular spectral region or in combination with gratings for replacing the foreprism.

When a wave passes from a dense medium to a less dense medium, total internal reflection takes place at the critical angle, and at all angles of incidence greater than this. If the less dense medium is a thin film less than a wavelength thick, and is in turn backed by a layer of higher refractive index the internal reflection is "frustrated." Thus a filter can be constructed. The merit, compared with the visual interference filters, is that only three layers are required to furnish a very narrow band pass. The characteristics depend on the angle of incidence and the state of polarization. Thus the pass band may be shifted, modestly, by altering the angle of incidence; such an arrangement has two pass bands, one polarized perpendicular to the plane of incidence, and the second at shorter wavelength, polarized in the plane of incidence.

IV. FILTERING TECHNIQUES

1. Transmission Filters

There are very few materials studied to date which selectively transmit long wavelength radiation. Those which do make simple and

invaluable filters. They are frequently placed in the optical path as windows--either of the cell or of the detector or as optical connections for separated parts of the spectrometer. Table I lists several of the more commonly used transmission filters and the approximate wavelength beyond which they transmit more than 50 per cent of the incident radiation.

2. Reflection Filters

These provide the most effective means of reducing unwanted radiation in a far infrared spectrometer. Three classes of reflection filters are in general use; they are reststrahlen crystals, gratings, and scatterplates.

Rubens (1897) described a method by which he obtained a fairly homogeneous long wavelength radiation by successive reflections from surfaces of a given crystalline material. Since this early application of a reststrahlen isolation, investigators have leaned heavily upon this technique of obtaining pure spectra. The method is based on the fact that crystals reflect as if they were metals in the spectral region where they absorb strongly, i.e., at the frequencies of their fundamental and secondary lattice vibrations; all other frequencies are randomly scattered. A partial list of reststrahlen crystals together with the wavelength of the maximum reflectivity is given in Table II.

An echelette grating, when used as a plane mirror, provides an effective means of removing short wavelength light from a beam containing

TABLE I

TRANSMISSION FILTERS

Substance	Short Wavelength Transmission Limit (μ)
1 mm Polyethylene	15
1 mm Paraffin	20
Diamond	20
Quartz	45
Teflon	75
Mica	200

TABLE II

RESTSTRAHLEN

Crystal	Wavelength of Maximum Reflection (μ)	Useful Wavelength Interval (μ)
MgO	15.5	12-18
LiF	25	20-33
NaF	35	25-45
BaF_2	45	32-55
NaCl	50	43-60
KCl	63	55-77
KBr	80	60-100
KI	90	75-105
CsBr	125	90-140
KRS-5	175	100-200

infrared radiation of all wavelengths. As pointed out by White (1947), such a beam incident upon a grating contains radiation belonging to two wavelength regions: that in which the wavelength is short compared to the groove spacing, and that in which the wavelength is longer than the distance between the grooves. If a flat mirror is replaced by a grating, the radiation belonging to the shorter region is diffracted out of the beam and into the various orders of the dispersed spectrum by the grating, but the long wavelength light is specularly reflected by the grating into the same image that would be formed by the mirror. These filters offer the advantages of sharp cutoff frequencies, application over a wide range of frequencies, and if properly selected, very little attenuation of the desired radiation. They have the disadvantages of being expensive unless milled in a machine shop, of requiring efficient baffling, and of being restricted to a few possible positions in the beam.

Along this same line but not as efficient is the method of filtering by scatterplates. Lord Rayleigh (1901) showed that rough surfaces reflect long infrared rays almost as well as polished ones, and Strong (1931) applied the phenomenon to the reduction of short wavelength radiation in a light beam by roughing the surface of a mirror from which it was reflected. Continuous sets of filters from such scatterplates are frequently used. They are simply made by polishing flat pieces of aluminum and then grinding with various grades of emory or carborundum in a trial and error fashion. Beyond 100 μ coating the aluminum with a thin layer of turpentine soot makes the filter more effective.

3. Crystal Choppers

Since infrared detectors respond to changes in energy which they see from moment to moment, it is advantageous to have the detector look alternately at the source and at an opaque shutter of near zero intensity. In the early days of spectroscopy this was done manually in point by point spectral scans. The application of this procedure to filtering was suggested, and Czerny (1923) described a shutter which was transparent throughout the near infrared. Short wavelength radiation was transmitted by the shutter and simply acted to give zero deflection since the detector was exposed to it continually. With the advent of ac amplifying systems the shutter became a chopper and now many times each second the detector could be alternately exposed to the source and to a null. By rectification it became a simple matter to ensure that only "chopped" radiation would be amplified and thus a great deal of troublesome background energy was eliminated. Firestone (1932) first applied the transparent shutter to this alternating current system and thus introduced an extremely effective filter for use in the far infrared. Since an amplified signal is produced only for that radiation to which the chopper is opaque, all other radiation is effectively filtered out of the beam. Thus, for example, when looking at 50 μ light, the use of a chopper transparent to 30 μ would eliminate all overlapping orders. A small amount of short wavelength radiation is not transmitted but is reflected from the face of the chopper and must be compensated for by placing one or two wire spokes in the open sector.

The blade of the chopper is normally one of the alkali halide crystals although conceivably it could be any material sufficiently transparent to the shorter wavelengths. Table III lists some possible materials and the transmissions limit of their usefulness as choppers.

4. Focal Isolation

The optical properties of quartz make it a unique and useful filter for the elimination of wavelengths shorter than 100 μ. The index of refraction of quartz is about 1.5 for the near infrared and about 2.1 for wavelengths greater than 100 μ. Positioning a thick lens of quartz in the beam results in the long waves being brought to a focus near the lens and in the short waves being focused so far from the lens as to be considered divergent. Furthermore a thick lens will be nearly opaque to all radiation between 5 μ and 100 μ.

5. Christiansen Filters

In these filters a transparent powder is placed in a fluid contained in a parallel sided cell. For any wavelength for which the powder and the fluid have the same index of refraction the cell acts in the same way as a plane parallel plate. For wavelengths for which the two substances have different indices, a beam of light passing through the cell will be scattered in all directions with an effect that becomes greater as the difference in the indices increases. In the infrared advantage is taken of the fact that the alkali halides have regions of anomalous dispersion in which the index of refraction passes through unity. For this reason air is used as the fluid, and

TABLE III

CRYSTAL CHOPPERS

Crystal	Transmission Limit (μ)
LiF	5.5
CaF	12
NaCl	15
KCl	19
KBr	25
CsBr	35
CsI	45

the cell, filled loosely with powdered salt, acts as a filter transmitting as much as 50 per cent of the light in the region of anomalous dispersion, becoming opaque rapidly on either side. Table IV lists several salts and their transmission peaks.

The above discussion by no means exhausts the possibilities of filtering. Indeed the problem is such that new schemes and materials are constantly being tried. For example, Moller (1963) recently described a set of transmission filter gratings for the far infrared. These are thin replicas of molded polyethylene, and filter by diffracting short wavelength light out of the beam in the same way as the reflection grating filter. They have the advantages of being inexpensive and easily made and can be placed anywhere in the beam. Like many long wavelength pass filters, however, they cannot be used when one wishes to study light in higher orders.

Before describing the application of the methods, materials, and components of far infrared spectroscopy to the development of a spectrometer at The University of Tennessee, mention must be made of two items of general interest--detectors and the elimination of water vapor.

V. DETECTORS

Infrared detectors may be classed as either selective or non-selective (Conn, 1960). Selective detectors, which are solid state devices, are sensitive over a limited range of wavelengths in the near infrared. Non-selective detectors are thermal devices which

TABLE IV

CHRISTIANSEN FILTERS

Salt	Transmission Peak (μ)
NaCl	32
NaBr	37
NaI	49
KCl	37
KBr	52
KI	64
RbCl	45
RbBr	65
RbI	73
CsCl	50
CsBr	60
TlCl	45
TlBr	64
TlI	90

respond rather uniformly throughout most of the infrared spectrum. Consequently, only thermal detectors can be used in the far infrared. These non-selective detectors measure the incident infrared radiation as a function of a change in temperature of their sensitive surfaces. The temperature change may be measured by the thermoelectric effect as in the thermocouple, by the change in electrical resistance as in a bolometer, or by the expansion of a gas as in the Golay cell. An important feature of these instruments is the "blackening" of the receiving element to ensure that power is absorbed at all relevant wavelengths. Selective blackening is in fact practiced so that it is possible, for example, to construct thermocouples which are particularly sensitive to certain regions of the far infrared (Reeder, 1963).

Most far infrared spectrometers today employ either the thermocouple or the Golay cell. The sensitivity of the Golay detector is almost uniform from the visible through the entire infrared spectrum and on into the microwave region. For studies between 500 μ and 1000 μ, the Golay cell is the only choice for today's laboratory instruments and it is frequently the preferred detector down to 100 μ. Despite its usefulness it is a delicate instrument requiring careful handling and caution must be exercised to protect the cell from excessive illumination. Furthermore, Golay cells, except for specially constructed models made in England, are seldom used in a vacuum for long periods because of the gas which they contain.

Thermocouples have recently been designed to equal the performance of the Golay cell out to 300 μ. The advantages of the thermo-

couple are that it is mechanically and optically rugged and can be used with impunity in a vacuum.

VI. ELIMINATION OF WATER VAPOR

The far infrared spectral region is distinguished by the abundance and strength of the pure rotational absorption lines of atmospheric water vapor. This absorption must be reduced or eliminated before spectral studies can be carried on in this region. The most satisfactory solution--indeed the only one which is completely effective--is evacuation of the spectrometer. However, this course is not to be set upon lightly; it can be both expensive and fraught with difficulties, but it will eliminate the water vapor spectrum.

If evacuation of the instrument is not practical or desirable, one then faces the problem of dehumidifying the air enclosed within the spectrometer in an effort to reduce the intensity of the water lines to a tolerable level. This may be accomplished by one or a combination of the following methods: (1) drying agents such as drierite ($CaSO_4$). or P_2O_5 may be placed within the enclosed instrument; (2) the air enclosed in the instrument may be circulated through external tanks of drying agents such as alumina (Al_2O_3); (3) the spectrometer may be flushed by a water-free gas such as oil pumped nitrogen; (4) the water vapor may be frozen out of the air by allowing liquid nitrogen to boil off through coiled tubing passing within the enclosed instrument.

The elimination of the water vapor spectrum background has also been attempted in both the near and the far infrared regions by using

a double beam spectrometer. When such an instrument is used in conjunction with one of the above drying methods the results are satisfactory.

CHAPTER III

DESCRIPTION OF THE SPECTROMETER

I. DESIGN CONSIDERATIONS

The minute amount of energy available places special demands upon the spectrometer to be used in the far infrared. However, it has been demonstrated by both Plyler and Acquista (1956) and Lord and McCubbin (1957) that small gratings are capable of collecting enough energy to be useful in recording spectra in the region between 20 μ and 200 μ. The instrument to be discussed here was built to cover the range from 25 μ to 250 μ.

Part of the reason that small gratings do collect enough energy can be found by examining the equation governing the amount of energy falling on the detector of a grating spectrometer as was done by Strong (1949). For simplicity assume the source emits according to the Rayleigh-Jeans distribution law,

$$B_\lambda = B_o \oplus \lambda^{-4} \qquad (\text{watt } [\text{cm}^2 \text{ steradian cm}]^{-1})$$

the energy through the exit slit will be

$$W = TB_\lambda \, s\ell \, \frac{A}{F^2} \, \Delta\lambda \qquad (\text{watt})$$

where T is the transmission or efficiency of the grating

s is the physical slit width

ℓ is the slit length

A is the area of the collimated beam and equals the grating area

F is the focal length

$\Delta\lambda$ is the wavelength range embraced by the slit

A/F^2 is the solid angle subtended by the grating.

Observing that for narrow slits $s/\Delta\lambda$ is the linear dispersion and is given by the product of the focal length and the angular dispersion, $\frac{d\theta}{d\lambda}$, one may replace s by

$$s = \frac{d\theta}{d\lambda} F\Delta\lambda ,$$

and then the energy reaching the detector is given by

$$W = TB_{\lambda} \ell \frac{A}{F} (\Delta\lambda)^2 \frac{d\theta}{d\lambda} \quad \text{(watt)}.$$

It is immediately evident from this expression that the larger the grating area the more energy reaches the detector. However, the unfavorable area of a small grating could be compensated if it had a large angular dispersion, high reflectivity, and large aperture and if the instrument were suitable for use with bright light sources and sensitive dectectors.

With these factors in mind it was felt that a Perkin-Elmer Model 12B prism spectrometer available in the laboratory could furnish a satisfactory basis upon which to construct a medium-resolution far infrared grating instrument capable of examining the spectrum between 400 cm^{-1} and 40 cm^{-1}. The design provides for as much flexibility as possible so the interchange of components and the move from one spectral region to another can be effected easily.

II. PHYSICAL FEATURES

The overall physical features of the completed spectrometer and its auxiliary equipment are shown in the photograph of Figure 1. The system is made up of four components: the spectrometer proper, the drying apparatus, an enclosed relay rack containing the electronics, and the gas handling system.

The spectrometer is mounted on an aluminum framework mobile platform. Leveling jacks at the base of the platform provide a firm foundation when the instrument is in operation. The instrument rests on a wooden table fitted to the top of this platform and its underneath side is accessible through a hole in the table. The entire spectrometer, including the source and the chopper, is enclosed by a single cover. This necessitated extending the deck of the spectrometer several inches on each side by bolting to it an aluminum rim cut from a single sheet of 3/8 inch metal. A liquid metal seal then made airtight the extension upon which the chopper was mounted. The cover is a galvanized box soldered to a 1/4 inch brass rim matching the outer edge of the extended base. A plastic molding is embedded in the brass and the cover is sealed to the base by machine screws.

With the single enclosure a simple and satisfactory drying arrangement is possible and there is no longer an air gap between the source and the enclosure. Three windows have been eliminated from the original arrangement. This results in improved transmission and eliminates a polyethylene window which was directly in front of

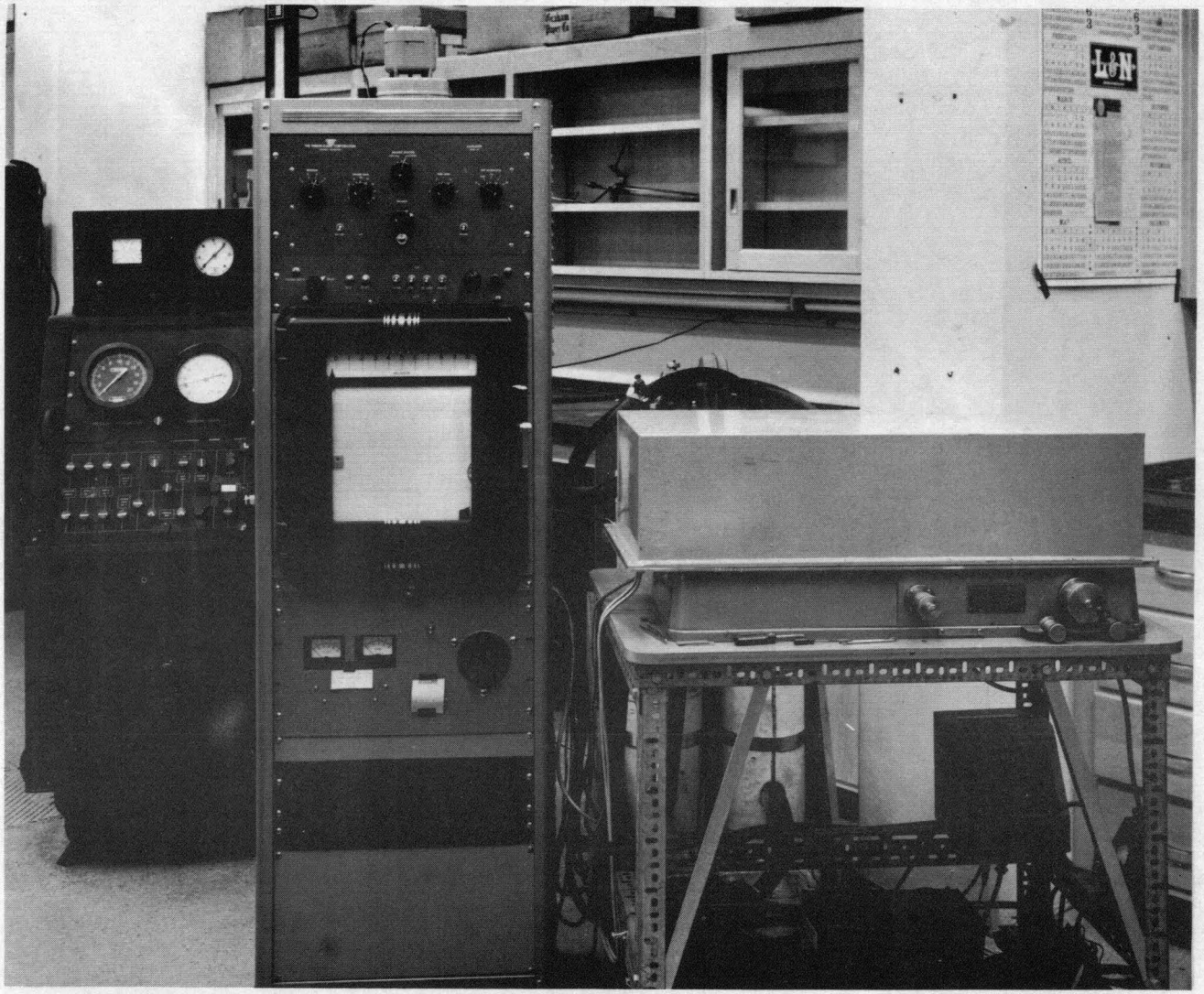

Figure 1. View of the Far Infrared Spectrometer and Auxiliary Equipment.

the 1500°K source. Furthermore the sample area has been increased to accept a 12 cm cell in the converging beam immediately in front of the entrance slit.

The spectrometer is not a vacuum instrument. The drying system consists of a pair of 4 inch diameter pyrex cylinders 3 feet tall containing pellets of activated alumina (Al_2O_3) (Kuipers, 1956). Provision is made for reactivating the alumina when it has become saturated with water vapor by blowing through it air which has been heated to 200°C. The pair arrangement makes possible the reactivation of one cylinder while the other is being used to dehumidify the spectrometer. The drying system is connected to the cover of the spectrometer by 1-1/2 inch diameter radiator hose. When the cover is sealed to the base, the entire system made up of drying cylinder, hose, and spectrometer is an air tight closed loop. A small electric fan continuously circulates the air in this system from the enclosed spectrometer, through the absorbing alumina and back to the spectrometer. This procedure, after overnight drying, results in the elimination of all but the strongest water lines and the reduction of those to below 20 per cent of their original intensities. Such an arrangement is frequently to the investigator's advantage because it provides sharp, fairly well spaced water lines for calibration. Figure 2 illustrates the effectiveness of the drying. The top scan shows three strong water lines in the 325 cm^{-1} region after a few minutes drying. The second scan shows the same region after several hours drying. Two of the strong lines have been reduced to about 15 per cent of their earlier

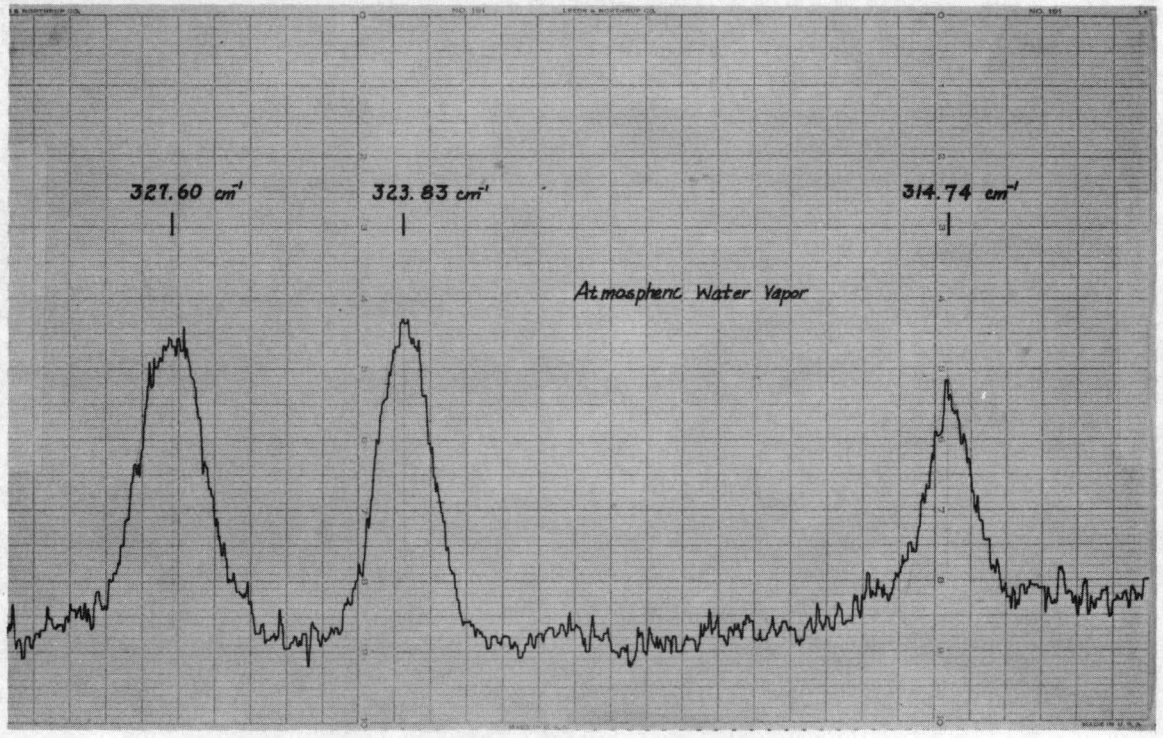

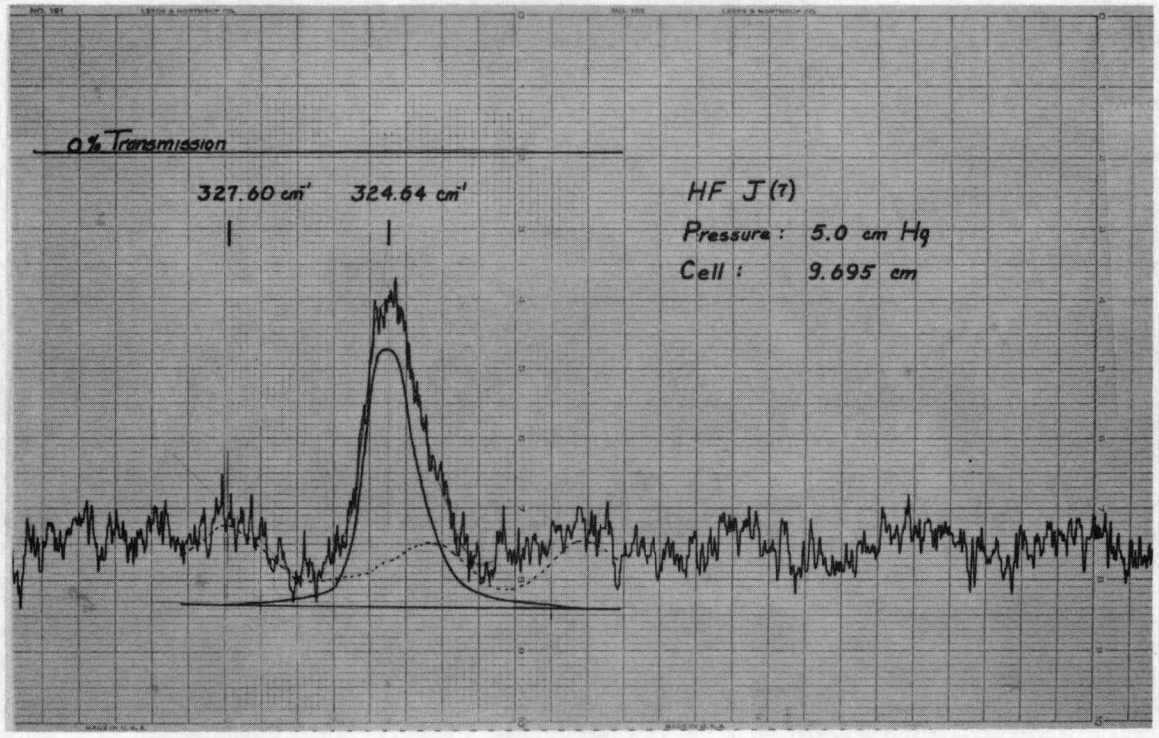

Figure 2. Scans of the 325 cm^{-1} Region Showing Effectiveness of Drying.

absorption; the third has been eliminated. The water absorption is shown by dotted lines beneath the recorded HF J(7) line.

In connection with the drying it should be pointed out that once the instrument is sealed and the removal of water vapor started a variety of gases over a fairly large spectral range can be examined without opening the instrument and interrupting the drying process. This is possible because provision has been made in the design of the instrument to reposition the grating, to select a suitable filter, and to admit gases into the cell by outside controls.

It was decided for purposes of instrumental mobility and electronic stability to mount the amplifier, recorder, control panel, and power supplies in a relay rack separated from the spectrometer proper. The outmoded Model 51 amplifier and mechanical rectifier which accompanied the original instrument were considered to be unsatisfactory for the uses to which the new instrument would be put. Consequently, the electronic circuitry was completely redesigned and rebuilt around a more powerful and stable system consisting of a pre-amplifier, the Perkin-Elmer Model 104 amplifier, and a Leeds and Northrup Speedomax recorder. There are two preamplifiers: one for the thermocouple and one for the Golay cell. They are mounted directly beneath the detectors on the spectrometer table to reduce pickup in the input cables.

The power supply system for the Globar source is mounted in the relay rack and consists of a 250 watt Sola constant voltage transformer, a 120 volt variac, a voltmeter and an ammeter. A General Electric 100 watt stabilized transformer furnishes the power and the

ballast for the mercury arc source, and a second 250 watt Sola provides stabilized power for the amplifier and controls. These too are mounted in the relay rack. In an additional effort to avoid power fluctuations the entire electrical system is fed regulated voltage from a master Sorensen Regulator.

In addition to providing storage space for the power supplies and amplifier, the relay rack contains the recorder whereon the spectra are displayed and the control panel. The panel contains the main power switch and on-off switches for the chart drive, pen motor, chopper, and source power supplies. The start and stop microswitches and automatic cut-off relay for the grating drive are also located on this panel.

The gas handling system has been previously described by Herget (1962). It was designed and constructed of monel to transfer and measure corrosive gases. Accurate pressure measurements up to 128 cm pressure can be made with a Taylor Differential Pressure Transmitter (Model No. 399RF). The system is connected by monel tubing to the cell in the spectrometer through a fitting in the base of the instrument, and a measured quantity of gas can be admitted or withdrawn from the cell without opening the spectrometer.

III. OPTICAL SYSTEM

1. Grating

The optical system of the grating spectrometer is shown in the ray diagram of Figure 3. The layout is a conventional Littrow-mounting arrangement. Chrome-aluminum front surface mirrors direct the radiation.

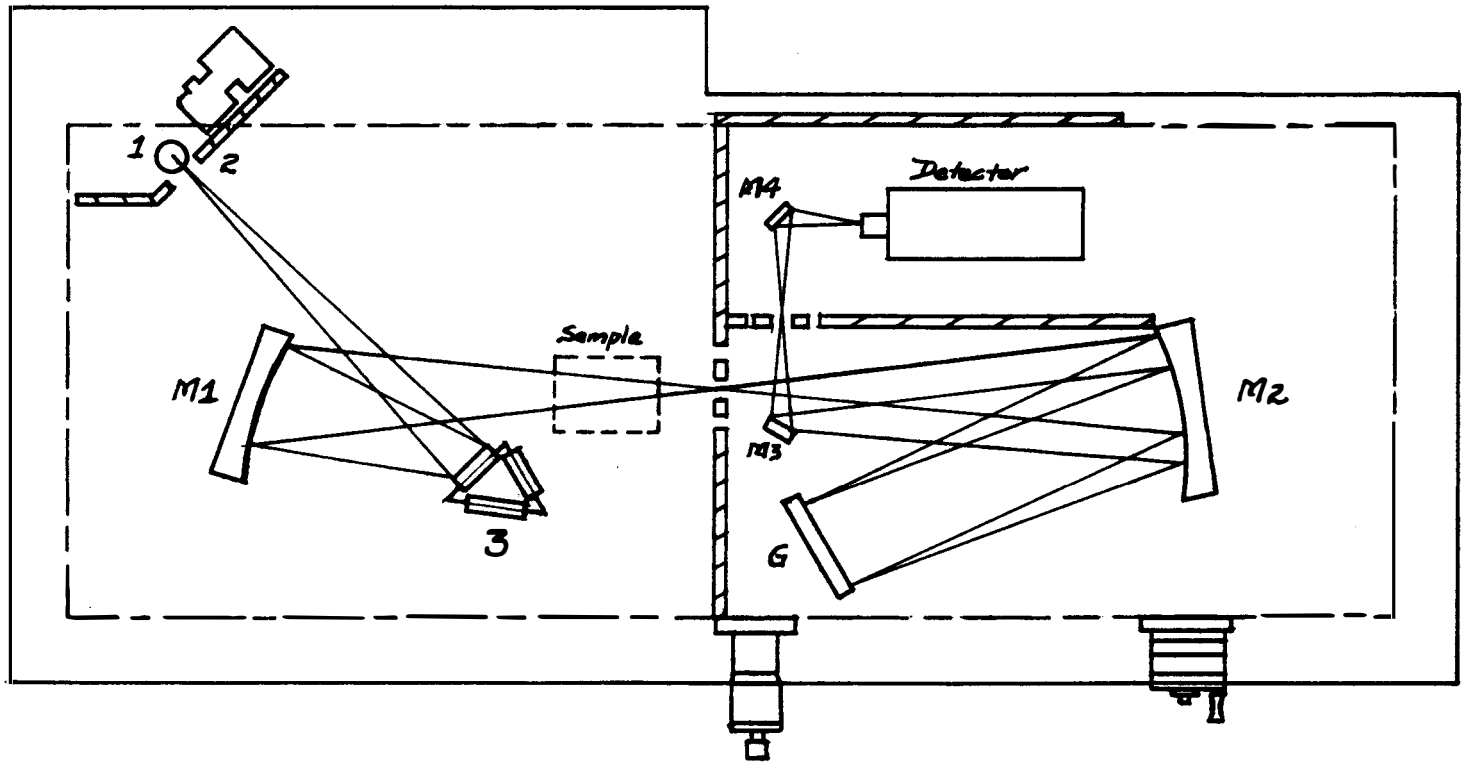

Figure 3. Ray Diagram of the Far Infrared Spectrometer.

Freedom of the mirrors from chromatic aberration makes it possible to focus the spectrometer with visible light and have it also in focus in the far infrared. The radiation from the source at position 1 is chopped by the crystal chopper at 2, reflected from the filter at 3 and focused onto the entrance slit of the monochromator by the spherical mirror M_1. The sample cell is placed in this convergent beam just in front of the entrance slit. The parabolic mirror M_2 collimates the light for the grating G and focuses the light reflected from the grating onto the exit slit by means of the flat mirror M_3. The light emerging from the exit slit is collected by the toroidal mirror M_4 and focused onto the entrance window of the Golay detector. When the thermocouple is used a flat mirror takes the position of M_4 and a 2 inch ellipsoid gathers the light and focuses it onto the detector window. The photograph in Figure 4 presents a close up of the optical components.

The distinguishing feature of this instrument is the presence of the grating. It is mounted on the Littrow mirror spindle in a holder specifically designed to facilitate the interchange of the three gratings presently available for the instrument. This mount is designed to permit small adjustments of the grating position about two horizontal axes through the center of the grating parallel and perpendicular to the plane of the grating. The gratings are approximately squares 7 cm on the sides and are blazed in first order for 33 μ, 85 μ, and 163 μ enabling one to examine the spectral region between 20 μ and 250 μ.

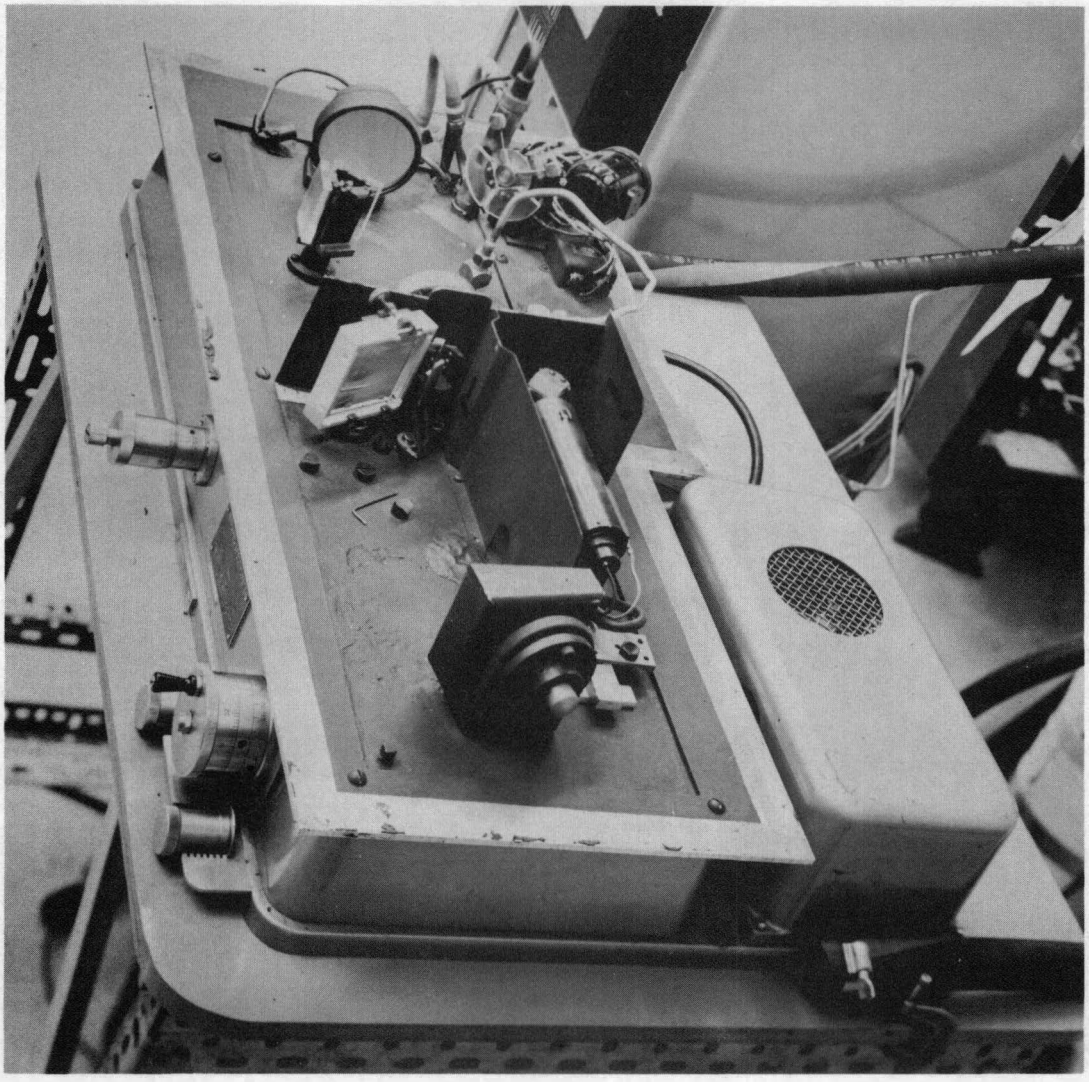

Figure 4. Closeup View of the Far Infrared Spectrometer.

The Littrow drive in the original Perkin-Elmer equipment was considered to meet satisfactorily the conditions of smoothness and reproducibility required of a grating turntable and every effort was made to retain it. Unfortunately this drive is limited to an angular range of 10° and this is not very useful in the far infrared. To remedy the situation provision was made to reposition manually the grating in 9° steps from beneath the spectrometer. An angular interval of 45° can be examined in overlapped stages without interrupting the drying of the instrument.

An 11° off-axis parabolic mirror M_2 replaces the 18° off-axis mirror which was used in the prism instrument. This is required because the grating is closer to the slits than was the prism. The parabola is approximately a 7 cm square having a 27 cm focal length. Straight entrance slit jaws replaced the curved ones with which the monochromator was originally equipped.

The plane mirror M_3 which directs light onto the exit slit was originally a part of the prism table and now requires a mount of its own. The mirror is fastened permanently to a shaped piece of aluminum having a slotted base which can be fastened to the monochromator deck by a single machine screw. When the filtering demands it this mirror is replaced by a reststrahlen crystal or a scatterplate each of which is a permanent part of its individual mount.

2. Filter Components

As discussed earlier the elimination of all but a single order of radiation is a major problem in a far infrared spectrometer. Since

this instrument was to be used in making intensity measurements spectral purity was most important. The filtering has been quite effective and the stray light is reduced to less than 2 per cent throughout most of the range of the instrument.

The heart of the filtering system is the crystal chopper at position 2 and the filter wheel at position 3 (Figure 3, page 32). The chopper is KBr made of two 90° sectors fitted together to form a semicircular blade 1/8 inch thick. The sectors are fastened to a 1-1/2 inch diameter brass disk by machine screws and epoxy cement. The screws are necessary because during runs of 24 hours or more the cement softens in the heat of the source. Two thin brass rods having weighted lead tips are secured in the open sector of the chopper opposing the KBr crystals. The chopper is balanced statically and dynamically and rotates smoothly at 13 cycles per second. The brass rods offer not only mechanical balance but optical balance as well by deflecting as much short wavelength radiation in the open sector as the KBr surface reflects in the bladed sector. Space is provided for the insertion of more compensating spokes if they are required.

The filter wheel shown in Figure 5 provides for the selection from outside the spectrometer of one of three previously chosen reflection filters. The filter holders are mounted vertically on a shaft which extends through the deck of the instrument and which can be rotated manually from beneath the table. The filters are optically aligned with the instrument open. The wheel is so positioned that when the filters are properly placed in the holder and rotated into

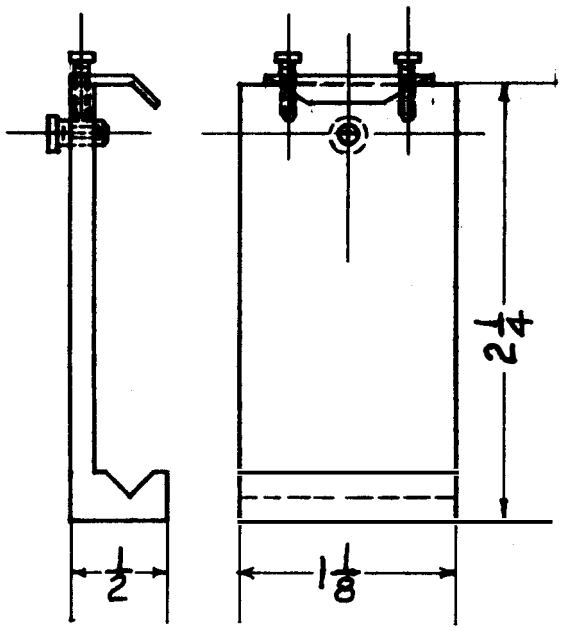

Front View

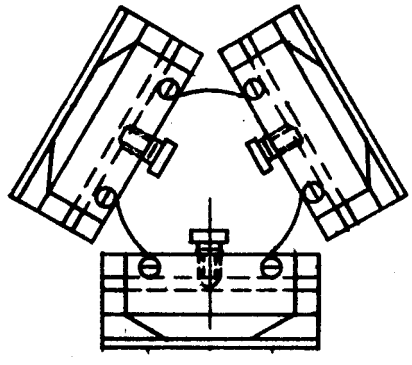

Top View

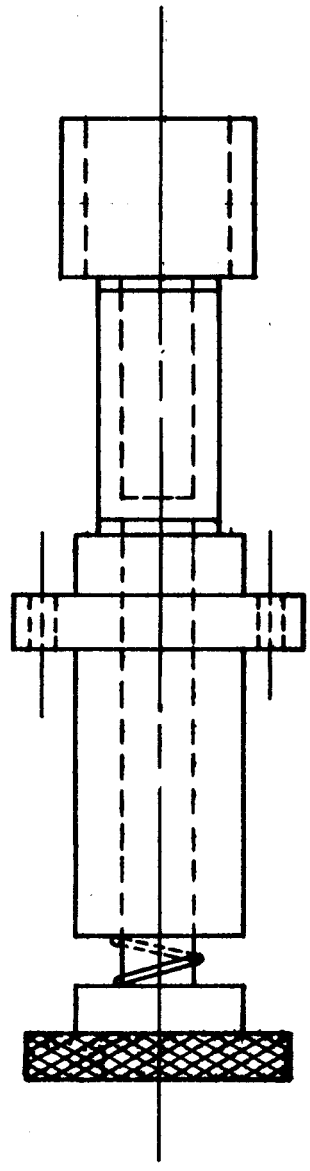

Spindle

Figure 5. The Filter Wheel.

the beam they are automatically aligned to give the best possible image on the entrance slit. Thus alignment of a filter with the spectrometer closed is accomplished simply by rotating the filter wheel to maximize the energy on the recorder with the grating at central image.

Although the filter wheel can accept reststrahlen plates, scatterplates, or even small gratings, only the reststrahlen plates are used on it at the present. With the exception of MgO and BaF_2 the crystals listed in Table II, page 14, are available for reststrahlen filtering.

With the exception of scatterplates which are occasionally placed in the positions of mirrors M_3 and M_4--particularly when the thermocouple is used--the only other filtering is done by selective transmission. The thermocouple has a quartz window which is opaque between 6 μ and 45 μ. The Golay detector has a diamond window which is opaque below 6 μ. Filtering through quartz occurs when using the mercury lamp because the arc is enclosed in a quartz envelope. At all times there is at least 0.1 inch of polyethylene in the beam in the form of cell windows. This greatly reduces radiation below 15 μ. Teflon filters are available and are used effectively beyond 100 μ. Table V is a compilation of the complete filtering system for each spectral region as used in making the measurements of the present work.

3. Sources

Either a water cooled Globar or a General Electric H100 A-4 high pressure mercury lamp when mounted in position 1 (Figure 3,

TABLE V

FILTERING SYSTEM FOR EACH SPECTRAL REGION

Spectral Region (μ)	Transmission Filter	Reflection Filter	Chopper	Grating (lines/mm)	Blaze (cm^{-1})	Source	Slit Width (mm)
(1) 20-30	3 polyethylene	LiF	KBr	30	300	Globar	0.7
(2) 30-45	3 polyethylene	NaF	KBr	30	300	Globar	0.8
(3) 45-55	2 polyethylene	NaCl	KBr	8 (2nd O)	120	Globar	1.0
(4) 55-70	2 polyethylene 1 quartz 1 scatterplate	KCl	KBr	8	120	Hg Lamp	1.0
(5) 70-100	2 polyethylene 1 quartz 1 scatterplate	KBr	KBr	8	120	Hg Lamp	1.2
(6) 100-140	3 polyethylene 1 quartz 1 teflon	CsBr	KBr	8	120	Hg Lamp	2.0
(7) 200-250	3 polyethylene 1 quartz 1 teflon	KRS-5	KBr	3	61	Hg Lamp	3.5

page 32) provides a source of continuous radiation for the instrument. Although their useful regions overlap, the Globar is normally used between 25 μ and 100 μ and the mercury lamp beyond 100 μ. The mounting for the mercury lamp is such that the lamp is supported from above in the same vertical axis as is occupied by the Globar when it is in position. Consequently, the two sources can be interchanged without refocusing the instrument.

4. Detectors

Although two detectors are available, a thermocouple with a quartz window and a Golay cell with a diamond window, it is probable that only the Golay cell will be used regularly. Nevertheless provision has been made for the exchange to be effected as easily as possible. Electronically this means the removal of three plugs and the insertion of three others. Optically the job is more complicated since each detector has its own mirrors and focusing must take place. The thermocouple can be used from 50 μ to 150 μ; the Golay cell is useful throughout the range of the instrument.

IV. PERFORMANCE

The spectrometer has been in operation for over a year and, except for minor operating problems, has been relatively free of troubles during this time. The most bothersome aspect of operation is the interchanging of filters and gratings when moving from one spectral region to another. Even this is not too time consuming, and once set up, the instrument requires very little attention.

The actual performance of the instrument is indicated in Figure 6, which shows a scan of the atmospheric water vapor spectrum between 23 μ and 30 μ. This spectrum was made following a short drying period and shows about 80 per cent absorption for the strongest lines. The resolution in this region is such that lines less than one wave number apart are identifiable even with this much water vapor in the path. Two lines at 399.89 cm^{-1} and 398.97 cm^{-1} show splitting and three lines at 376.26 cm^{-1}, 375.38 cm^{-1}, and 374.54 cm^{-1} are definitely indicated. The two lines at 358.44 cm^{-1} and 357.27 cm^{-1} are clearly separated. This degree of resolution is attainable throughout the range of the instrument.

The central images shown in Figure 8, page 58, give some indication of the optical alignment and the degree to which it is maintained when components are interchanged. All are symmetrical and triangular and show approximately the same breadth of half height. The spectral slit widths throughout the range of the instrument run between 0.5 cm^{-1} and 0.8 cm^{-1}.

The optical filtering effectively ensures purity of spectra and in general unwanted radiation is reduced to less than 3 per cent. The instrument is usually operated with a noise to signal ratio of about 1 to 10.

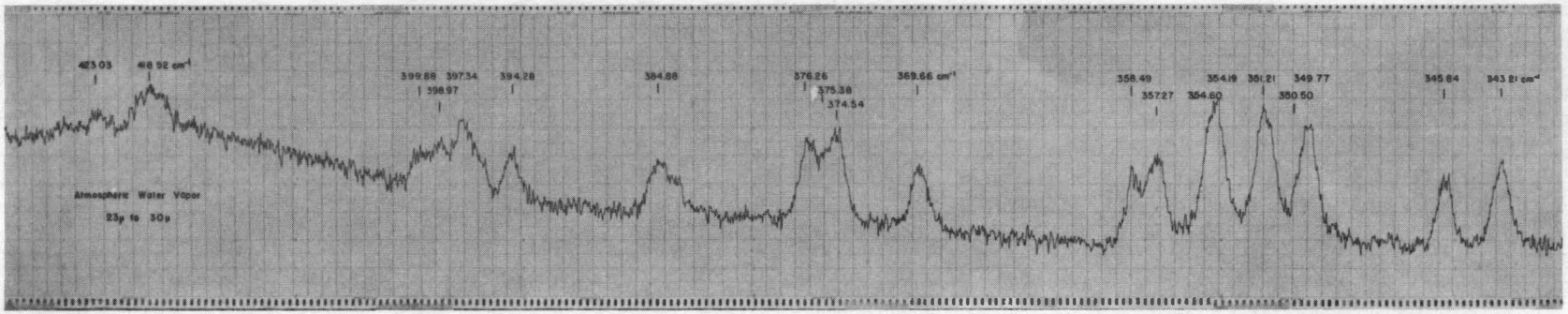

Figure 6. Scan of the Atmospheric Water Vapor Spectrum Between 25 μ and 30 μ.

CHAPTER IV

EXPERIMENTAL MEASUREMENTS

As a part of the experimental problem measurements were made of the transmittance as a function of frequency and pressure of seventeen lines in the pure rotational absorption spectrum of hydrogen fluoride gas. The first ten lines in the series, that is, those identified by the rotational quantum numbers J=0 through J=9, were observed on the far infrared grating spectrometer described above. The other seven, having higher J numbers, occur in the frequency range 650 cm^{-1} to 400 cm^{-1} and were observed on The University of Tennessee's high resolution vacuum grating spectrometer. The procedures in obtaining these two sets of measurements will be described in the following sections.

I. THE FAR INFRARED SPECTROMETER

1. Instrumental Difficulties

This instrument was designed partly for the purpose of making the measurements on hydrogen fluoride, and consequently modifications to it were not necessary.

Change of spectral regions. The most annoying feature of the instrument is the limited spectral range of any given filtering system. The ten absorption lines of HF which were observed fall into seven different filtering regions. This means that for nearly every line

measured at least one and sometimes as many as five optical components had to be changed. This was anticipated in the design of the instrument and an effort was made to facilitate the interchange of components; for example, most optical parts can be fitted into the instrument in only one position and when in that position require no realignment of the beam. Many of the lines were observed with the thermocouple because the Golay cell was not available. The change from one to the other is a tedious and time consuming project; but fortunately, with the installation of the Golay cell there should be no further need for changing detectors.

Water absorption. One of the most serious impediments to obtaining intensity measurements arises from the presence of atmospheric water vapor in the optical path. The drying process is started at least 24 hours before making measurements. Every effort is made to seal the instrument against air leaks. The cover is bolted to the base of the spectrometer pressing the inner plastic seal tight around the perimeter. As an additional precaution Apiezon Q is applied at the seam of the base and the cover as well as around all the electrical and tubing entrances to the instrument. However, even after the drying limit is reached many of the strong lines of the water vapor spectrum still indicate as high as 15 per cent absorption. It has been found that the drying is accomplished more quickly and more effectively if the circulating air is heated slightly. One must be careful, however, to avoid heating the air too much or moisture will be picked up in the alumina bed and carried back into the spectrometer.

Fortunately many of the hydrogen fluoride lines were relatively free of underlying water vapor lines and point by point subtraction resulted in reasonably pure lines with the wings less satisfactorily determined than the shoulders and line centers.

Scattered light. Stray, unwanted radiation cannot be tolerated in intensity measurements. It must be eliminated or compensated for if errors are to be kept to a minimum.

The overall effectiveness of the filtering can be demonstrated in two ways. First, the spectrum can be examined throughout the angular range of the grating. In every case where this was done the recorder showed no transmission from central image to the region where the reststrahlen crystal began passing radiation into the monochromator, and the difference in transmission with the slits open and with them closed was not detectable. Second, a transmission region can be made opaque by placing sufficient gas in the optical path to absorb 100 per cent of the radiation reflected from the grating at a given angle. In all instances where this was done the difference in the pen deflection for 100 per cent absorption and for slits closed was less than 2 per cent. Error was further reduced in the measurements by taking the 100 per cent absorption line and not the slits closed line, as the reference line for zero transmission.

The filtering system by itself is not sufficient to eliminate stray light; baffles are a necessary and efficient adjunct and their positioning is frequently a matter of trial and error. The detector, the monochromator and the sample-source section are separated from one

another by baffles. The Golay detector in particular is almost entirely enclosed in an aluminum box within the spectrometer with only the back left open for the circulation of dry air. The chopper is a constant source of unwanted radiation and required special baffling. Prior to proper baffling the chopper reflected scattered light into the detector 180° out of phase. The effect of this on intensity measurements is evident. The effect on the operator is startling when, for example, the recorder pen gives strong definite energy deflections on the wrong side of the zero transmission line. The pen deflection in the wrong direction also occurs when too many compensating spokes are placed in the chopper. In this case the detector responds to intense short wavelength radiation 180° out of phase.

The effect of stray light is most evident at the blaze of the grating and this is particularly true of the grating blazed at 163 μ. However, the additional filtering required in this case to reduce the blaze energy to one-third its value does not reduce the off-blaze energy by more than 10 per cent.

Fogging of the chopper crystals reduces their effectiveness as filters and consequently permit unwanted radiation into the monochromator. Over a period of several weeks the atmospheric water vapor slowly fogs the crystal reducing its transmission and resulting in more short wavelength radiation being chopped. Additional spokes will compensate for this, but they will reduce wanted radiation too; consequently, it is better to remove the chopper from the shaft and polish the crystal with ethyl alcohol.

Heating. The heating of the chopper blades is also a source of transmission reduction. The chopper heats because it sits only 3/8 inch from the 1500°K source. Since the detector looks alternately at the chopper blade and the source and responds to the difference in their radiation, its response will consequently decrease as the chopper heats. This effect was pronounced when using the mercury lamp and because it was used for only the last two lines measured no arrangement was made to cool the chopper. The chopper blades could be cooled simply by passing them between water-cooled plates during the half cycle they are out of the beam.

Overall heating within the small enclosure of the spectrometer is a problem which is extremely apparent when the mercury lamp is used; the cover becomes almost hot to the touch. This heating causes the detector to become noisy, introduces stray radiation throughout the system thus reducing effective signal, and softens the polyethylene windows of the cell. Although the heating is not sufficient to cause the windows to collapse, it does allow them to be more easily flexed. This deformation defocuses the light passing through the windows to the slit and results in less energy on the detector. This phenomenon has been observed when gases are admitted to the cell at pressures of 50 cm of Hg. The effect was insignificant at pressures of 10 cm or less at which most of the data were taken. A possible solution would be to cool the circulating air as it enters the spectrometer. Also cold plates should be placed at various points throughout the instrument, particularly on the motor of the chopper and possibly on the

detector. These are made by drilling water passages through small solid blocks of copper or brass and fastening them in firm contact to metal surfaces. Cool water from an external source is then circulated through the blocks.

Miscellaneous. Occasionally the system becomes very noisy; the pen will make random fluctuations at twice the normal operating noise level and even swing rapidly from one side of the chart to the other. This is usually traced to noise in the power supply circuit of the Golay lamp and is corrected by making better contact with the battery terminal or reducing the voltage of the lamp which operates most quietly and satisfactorily at 2.4 to 2.5 volts.

The Globar has been a surprisingly stable source of energy. Its power is stabilized by a Sola constant voltage transformer and when new the Globar has given several months of satisfactory service without too many random fluctuations.

The overall signal to noise ratio is never quite satisfactory but it is tolerable. The noise while sometimes large is usually fairly constant in amplitude and can be averaged out. The Golay detector is normally operated at a gain of 15 and a response of 3 on a Perkin-Elmer Model 104 amplifier. The thermocouple can be operated at gain 21 and response 3. These values of course vary from detector to detector and amplifier to amplifier.

2. Gas Handling System and Absorption Cells

The gas handling and pressure measuring system, which was designed and constructed to control the extremely corrosive hydrogen fluoride, is ideally suited to the type of measurements which were required in this investigation--namely, background runs with no gas in the cell and measuring runs with the sample gas in the cell. The optical path is identical in each case except for the presence or absence of hydrogen fluoride in the cell. It might be argued that because the windows flex slightly an inert gas should be placed in the cell at the same pressure as the sample gas when making background runs, but this was not considered necessary because of the low pressures involved.

The absorption cell windows are of polyethylene. The few materials which were known to transmit in the far infrared were considered. Polyethylene was chosen because of its high transmittance in the spectral region of interest. It was tested for its ability to withstand HF and found to be vacuum tight and non-reactive to small samples over periods of several weeks. The weaknesses of polyethylene are evident. First, its low melting point prohibits heating the cell above 45°C. Second, it is a flexible material; this makes difficult the accurate determination of the distance between windows.

When a vacuum is pulled on the cell the window stretches slightly and bows in; when the vacuum is released the window remains slightly bowed in. After several days use the windows are stretched to shape and position and there is little change in the distance between

them thereafter if the sample pressures are kept below 10 cm Hg. The amount of bowing can be measured and the average distance between the windows over the illuminated area can be estimated to within a fraction of a millimeter. To avoid unnecessary flexing and possible leakage the sample pressure was always kept below 60 cm of Hg.

Two absorption cells were used in these measurements. They are similarly constructed cylinders, one of brass the other of monel, and differ primarily in path length. The brass cell is 9.695 cm long and the monel 0.376 cm. A drawing of the larger cell is reproduced in Figure 7. There is no gasket; the 0.040 inch polyethylene window is pressure sealed directly to the metal and held in place by a V and groove embedment around its perimeter. The cell rests on a wooden cradle immediately in front of the entrance slit. It is held firmly in position by the monel tubing which is fastened to a fitting in the base of the table and connects to the gas handling system outside the spectrometer.

3. Calibration Technique

As stated in the section on instrumental difficulties the spectra of hydrogen fluoride gas and reduced atmospheric water vapor are recorded simultaneously. Although the presence of the water vapor is frequently annoying, it does provide a system of lines of known frequency which can be used for calibration throughout the far infrared spectral region.

The frequency of a spectral line, ν (cm^{-1}), is related to the grating constant, k (cm^{-1}), and the angular distance from central

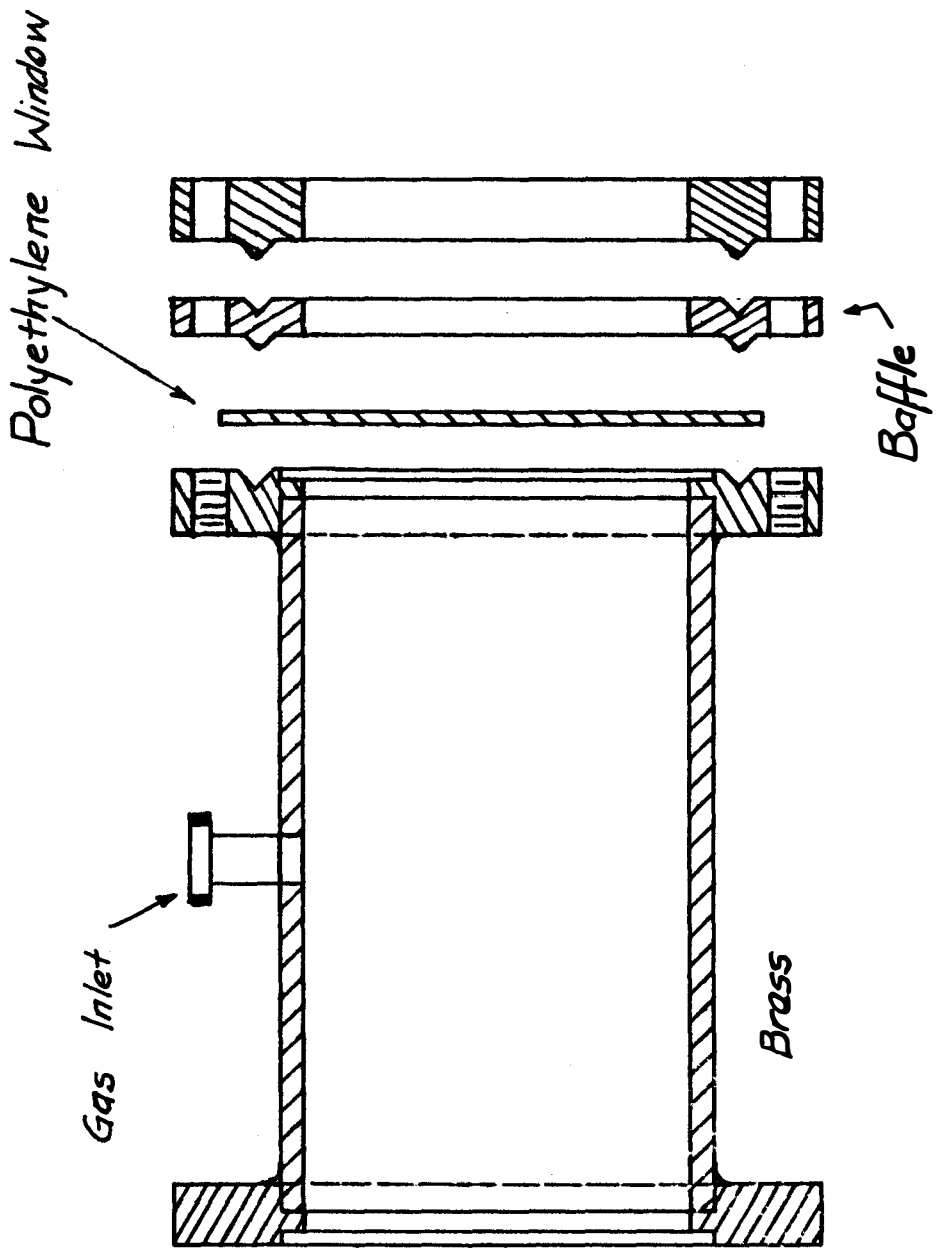

Figure 7. The 9.695 cm Cell.

image, θ (degrees), by the expression

$$\nu = \frac{nk}{\sin \theta}$$

where n is the diffraction order. Ordinarily k would be calculated by knowing the frequency of a calibration line and measuring its angular position accurately. This calculated value of k, together with the measured angular position of an unknown spectral line, could then be used to determine the frequency of the unknown. This procedure cannot be used with this spectrometer, however, because the grating is turned manually to the spectral region of interest and thus the angular position of a line in this region cannot be measured accurately.

The angular positions and grating constant were determined in the following manner. Angular separations between lines within a given grating region can be determined to a fraction of a second of arc. Two lines of known frequency ν_1 and ν_2 are selected; their angular positions are said to be θ_1 and $\theta_2 = \theta_1 + \Delta$, where Δ is the precisely measured angle between the two lines. The grating equations for the two lines are then:

$$\nu_1 = \frac{n_1 k_1}{\sin \theta_1}$$

and

$$\nu_2 = \frac{n_2 k_2}{\sin (\theta_1 + \Delta)} \quad .$$

Assuming the diffraction orders and the grating constants to be the same, the two equations can be solved simultaneously to obtain the

value of k and θ_1. The frequency of any other spectral line in this region can then be determined from the grating equation

$$\nu = \frac{nk}{\sin(\theta_1 + \delta)} \quad ,$$

where δ is the precisely measured angular diffraction between ν_1 and ν.

The validity of this method was checked in every spectral region in which an HF absorption line was measured. The frequencies of two known water lines were used to determine the values of θ_1 and k which were in turn used to predict the frequencies of other water lines within the region. In most cases the predicted values differed from the accepted values by less than 0.05 cm^{-1}. In some cases the differences were greater than this, but this is not surprising since these water lines are very pressure dependent and much overlapped by other lines. It is believed that if care is taken to select for calibration two water lines which show no signs of interference from other lines, then the unknown frequency of the HF line can easily be determined to 0.05 cm^{-1}.

4. Data Taking and Handling

Scanning technique. Each HF absorption line for which data were obtained was recorded at least three times for every pressure and cell length used. Using the gas-in, gas-out technique discussed in the section on the gas handling system, background records were made before and after each set of runs. All data were taken using the technique

of automatically and continuously scanning through the spectral region. This method should give satisfactory results as long as the response of the system is fast enough to record the energy change occurring. When compared to a point-by-point manual scan technique no difference was apparent. All measurements were made driving the grating at 3.375 minutes of arc per minute of time, which is the slowest scanning speed available.

Determination of line center. The angular positions of all spectral lines are determined directly on the chart paper. A smooth free-hand curve penciled through the curve drawn by the pen on the chart paper averaged out the noise as well as possible. This was done for both the measuring curve and the background curve. The background curve was then superimposed on the measuring curve and a point-by-point subtraction of the water vapor spectrum made. The resulting curve was judged a reasonable representation of the desired HF absorption line. The line center was determined by measuring the width of this absorption line at several positions and marking the midpoint. A straight line is then drawn through the midpoints perpendicular to the edge of the chart paper. The position of this line then determines the angular position of the center of the spectral line.

Determination of base line and zero line. After a spectral line has been recorded by the spectrometer a base line and a zero line have to be determined before transmittance measurements can be made. The base line is the locus of all points on the chart paper corresponding

to 100 per cent transmission. The zero line is the locus of all points on the chart paper corresponding to zero per cent transmission.

The first step in determining the base line was to scan a given spectral region, with the cell evacuated and the drying of the instrument completed, to determine the background. This usually proved to be a smooth curve interrupted at points by weakly absorbing water lines. There was always sufficient distance between these weak water lines that points of the curve midway between them could reasonably be taken as points of 100 per cent transmission. These points were connected by a smooth curve. The background was then superimposed on the measuring curve in such a fashion that corresponding water lines coincided through the points of their maximum absorption. This compensated for the slight loss of transmission occurring over a several hour period as discussed in the section on heating. The background line was considered straight over a spectral region of 10 cm^{-1} to 12 cm^{-1} and no overlap of adjacent HF lines was assumed for such small pressures. The final base line was a straight line drawn from one wing to the other of the spectral line in question.

As discussed in the section on scattered light, the zero line cannot be determined simply by closing the slits. For lines that absorb 100 per cent the zero line was evident and indicated by a flat portion of the spectral line that extends through the line center. Lines which did not absorb 100 per cent at the desired pressure could be scanned again at a pressure high enough to make the line absorb 100 per cent. This latter scan determined the zero line for the former

scan. In other instances it was more convenient to scan a desired line and then at the same instrument setting scan a nearby water vapor line that absorbed 100 per cent; again the latter scan determined the required zero line. It was found that the zero line over large regions was a straight line parallel to the edge of the chart paper.

Instrumental broadening. Instrumental broadening of spectral lines results primarily from imperfect optics and the use of finite slits which allow the passage through the instrument of a frequency interval rather than monochromatic radiation. The effect on the recorded line shape is an increase in absorption in the wings and a decrease in absorption at the line center as compared with the true line shape.

A formalism for the application of slit corrections has been given by Dennison (1928). He defines a function $\rho_{\nu}(\nu)$ as the light intensity falling on the detector when incident light of frequency ν illuminates the entrance slit of the spectrometer when ν_i is the computed frequency setting of the spectrometer assuming infinitesimal slits. The experimental transmittance is then related to the true transmittance, T, by the equation

$$T'_{\nu_i} = \frac{\int_o^\infty \rho_{\nu_i} T \, d\nu}{\int_o^\infty \rho_{\nu_i} \, d\nu}$$

An effort was made to determine a slit function for each spectral region in which an HF line occurs by scanning through the central image with the same optical conditions of slit width, filtering components

and grating speed in which the HF line itself was scanned. It is reasoned that a monochromatic source of light through the finite slits would result in a line of the same shape as the central image. Several such central images are shown in Figure 8. They are symmetrical, triangular, and rounded at the peak and the bottom edges. The breadth of the line at half height for each central image was measured and is shown in the picture as the spectral slit width. Earlier work in the laboratory on the fundamental vibration-rotation band of HF (Herget, 1962) indicated that a slit correction method did not give acceptable results when applied to spectral lines that were more narrow than lines about three to five times as wide as the slit function. In most instances the lines measured in the present work were less than three times as wide as the slit function and so were considered too narrow to be corrected.

As shown by Kostkowski and Bass (1956) the error introduced by using data not slit-corrected for intensity measurements is only about 2½ per cent even when the spectral slit width is more than four times as large as the line half-width. The broadening of the absorption coefficient largely compensates for the depression of the peak thus keeping the area nearly constant.

Operating conditions. The measurements on the far infrared spectrometer were made at approximately 30°C when the Globar was used and 35°C when the mercury lamp was in use. These temperatures are different from room temperature because of heating by the sources of the small volume within the spectrometer enclosure. The cells were not

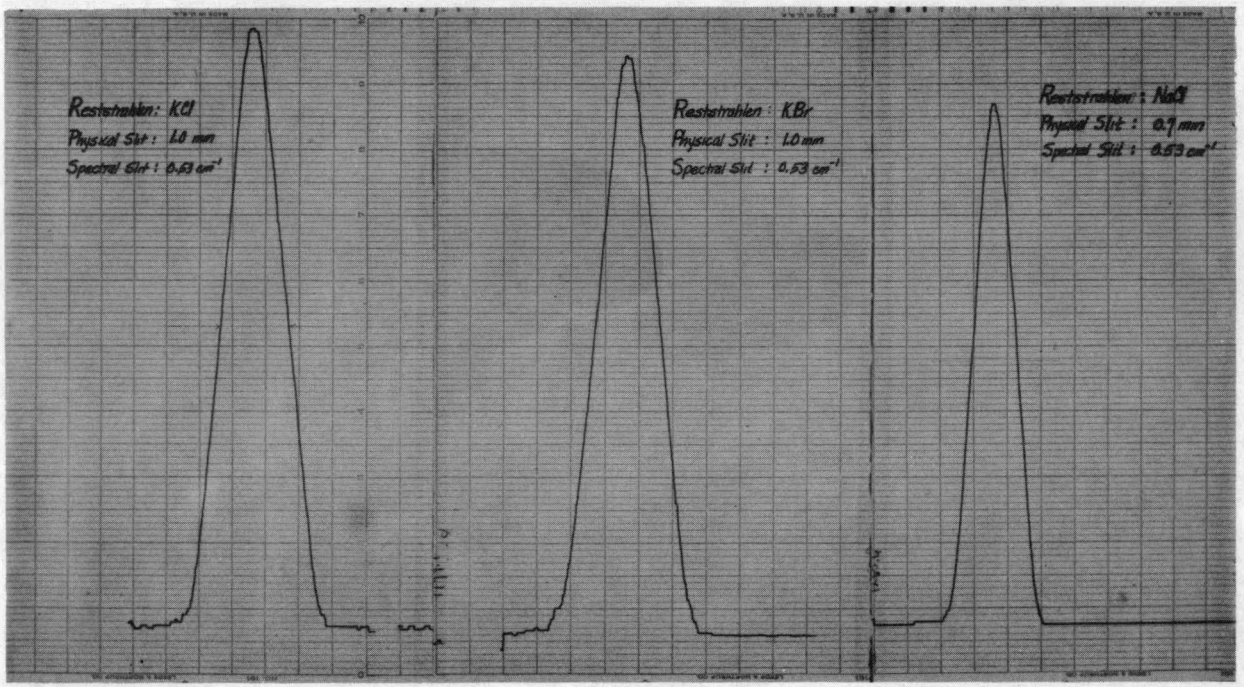

Figure 8. Scans of Central Image in Three Spectral Regions.

heated for the purpose of eliminating the polymers since to do so would have melted the polyethylene windows. No polymer absorption was identified near any of the HF lines measured and no correction to the pressure measurements for the presence of polymer was made since the polymer is believed to make up less than 2 per cent of the gas.

Many of the lines were measured at several pressures and at two different path lengths. The pressures varied from 0.75 cm Hg to 20.0 cm Hg both from line to line and for a given line.

II. THE VACUUM GRATING SPECTROMETER

The HF pure rotational lines lying between 15 μ and 25 μ were observed on The University of Tennessee's high resolution vacuum grating spectrometer which has been described previously by Herndon, et al. (1962). Ray diagrams of the optical system are shown in Figures 9 and 10. Front surface aluminum mirrors are used through the instrument. The source radiation is brought through the sample area and focused on the entrance slit to the fore prism by the spherical mirrors M_1, M_2, and M_3, and the flat mirror M_4. The mirrors M_6 and M_7 and the prism P comprise a basic Perkin-Elmer interchange unit.* Mirrors M_8 and M_9 are twin off-axis paraboloids. The light is collimated for the grating by mirror M_{10} which is a parabola with a 48 inch focal length. M_{11} is a flat mirror with a 2 inch square hole cut in its center. Light leaving the monochromator is brought to the detector

*Drawing No. 021-0701, Perkin-Elmer Corporation, Norwalk, Connecticut.

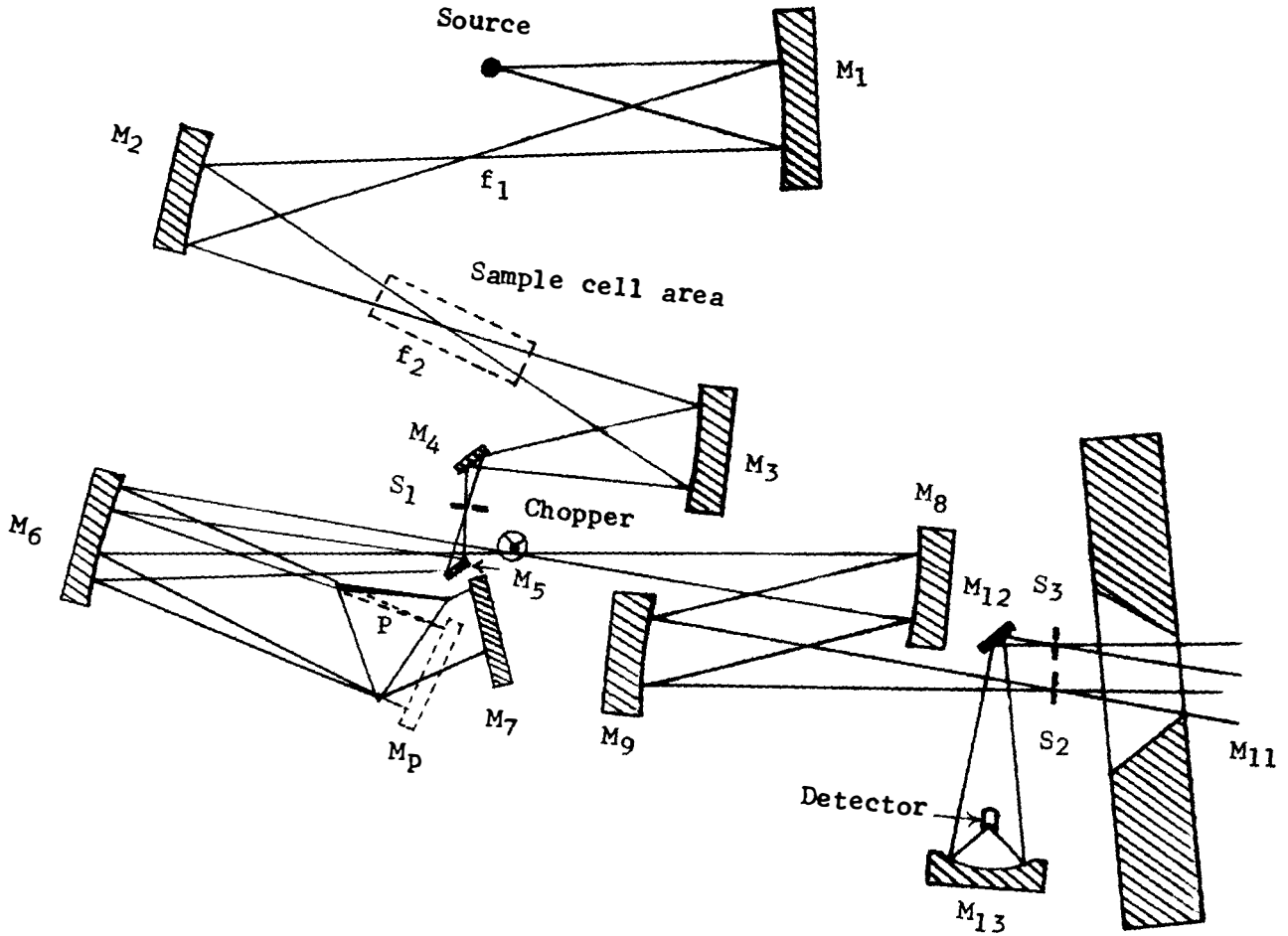

Figure 9. Optical scheme for getting radiation to the grating monochromator.

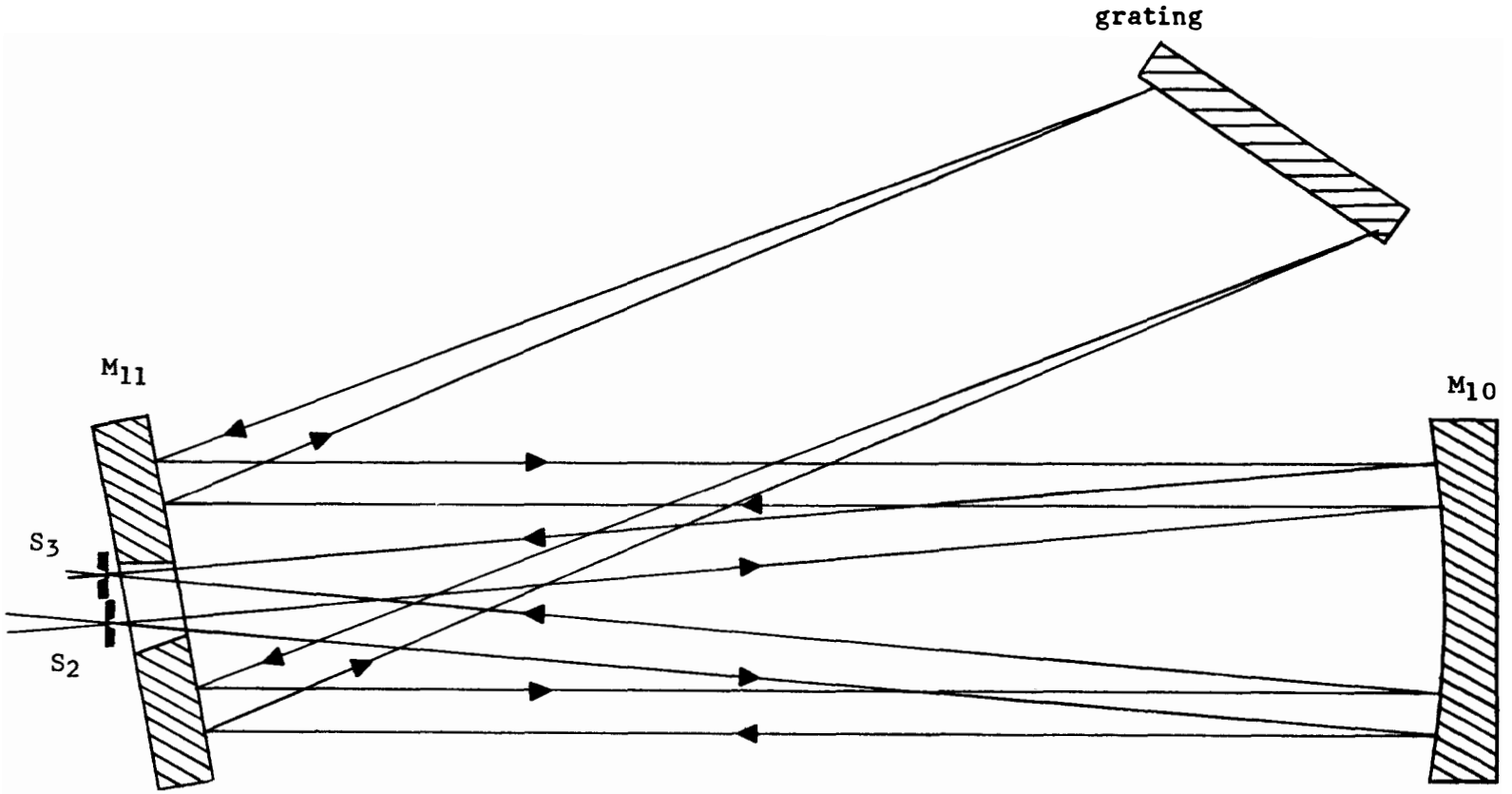

Figure 10. Ray diagram of the grating monochromator.

by the flat M_{12} and the ellipsoidal mirror M_{13}.

1. Modifications

The flexibility of the spectrometer made it unnecessary to modify appreciably the optical system. A few changes were made, however, and these will be discussed.

Chopper. The measurements in the vacuum instrument were made with the cell heated to 225°C. At this temperature it was felt that the hydrogen fluoride emission lines might appreciably affect the absorption spectrum which was to be observed. In its normal position in this instrument, the chopper is placed between the sample cell and the detector. In this position the chopper interrupts not only the radiation emitted by the source but that emitted by the gas in the cell as well. Since all chopped radiation falling on the detector is amplified, much of the emission spectrum, as well as the absorption spectrum, would be amplified with the chopper in its usual position. This is undesirable because the overall result would be to attenuate the absorption spectrum. For this reason the chopper was repositioned and placed immediately in front of the source where it would no longer chop, and the detector could no longer amplify, the radiation being emitted by the cell.

Since the chopper was to be moved, it was decided to redesign it to take advantage of the filtering properties of certain materials. With the spectral region of interest lying between 15 μ and 25 μ, it would have been advantageous to construct the chopper blades of some

crystal such as BaF_2 or CaF_2 which would be transparent to most of the radiation having wavelength shorter than 12 μ. Unfortunately, however, the 4.67 μ band of carbon monoxide was to be used for calibration and consequently the chopper must be opaque to this radiation if it was to be observed. For this reason, it was decided to make the chopper blade of glass. Thus constructed, the chopper was transparent to wavelengths shorter than 2.7 μ. A two-fold reduction in stray light resulted. First, the peak radiation from the Nernst glower was not chopped and consequently made no contribution to the signal. Second, the glass blade did not become as hot as would have a similarly placed metal chopper; consequently the emission from the chopper itself was kept to a minimum in the 4 μ to 8 μ range--second and third order radiation to the region of interest.

Elevator. Higher orders of the fundamental absorption band of carbon monoxide were used for calibration. Because the windows of the CO cell would further reduce the already limited energy at 20 μ it was desirable not to mount this cell permanently in the beam. An arrangement was designed for introducing the CO cell into the beam and simultaneously removing the HF cell via an elevator moved by a slave selsyn within the vacuum chamber and operated from the spectrometer control panel by a master selsyn. The cells were mounted on opposite sides of the elevator--the CO cell intercepting the beam between mirrors M_1 and M_2 and the HF cell between mirrors M_2 and M_3. The CO cell was suspended on a glass rod to reduce as much as possible the conduction of heat to it from the HF cell.

Filtering. Although the glass chopper provided some filtering of the intense radiation at the peak of the emission curve, effective separation of orders was still required to obtain a satisfactorily pure first order spectrum between 15 μ and 25 μ. Unfortunately no band pass filter exists for this region and the 60° KBr prism available reduced the intensity considerably in the longer wavelengths. Preliminary runs were made, therefore, using a grating as a reflection filter as described in Chapter II. With the prism removed a 2800 lines-per-inch grating was placed in the Littrow mirror position and specularly reflected radiation beyond 9 μ. This greatly reduced second and higher order radiation and gave a reasonably pure but slightly attenuated spectrum between 15 μ and 25 μ. The grating was such an effective filter that the 4.67 μ CO band was all but eliminated--certainly reduced beyond the point of usefulness as a calibration standard.

The filtering problem was satisfactorily solved with the acquisition of a 15° KBr prism. When this was placed in the normal prism position with the Littrow mirror, it provided sufficient dispersion to separate the first order from the higher order radiation and allowed a maximum transmission in the region of interest. The prism also provides a convenient mechanism for alternately examining the radiation of two or more orders in the same angular region of the grating. Such a procedure is necessary when calibrating with reference lines that occur in higher orders in the spectral region of interest.

Nitrogen cooling system. Provisions were made for cooling the windows of the heated HF cell. Copper tubing led from a cylinder of oil pumped nitrogen into the spectrometer through a vacuum connection in the bulkhead. In the sample area the tube was so arranged that a spray nozzle projected onto each window when the cell was positioned in the beam. A gas regulator leaked nitrogen from the cylinder at a pressure of 3-5 lbs. per sq. in. The nitrogen expanded through the tubing into the spectrometer and streamed across the windows of the cell at an estimated temperature of 20°C. The vacuum of the spectrometer was maintained at 200 microns Hg by continuously pumping the released nitrogen from the instrument.

2. Experimental Difficulties

The problems encountered at this stage of the investigation can be summed up in nine words--heated cell, pressure, silver chloride windows, teflon gaskets, and vacuum. Any of these items by itself is a possible source of trouble. Taken together they can cause such a complex of inter-related problems that it is difficult to isolate a single problem and determine its cause. Frequently it was found that clearing up a problem only exposed to view others which had been masked by it.

Teflon gaskets. It is well known that AgCl is corrosive in contact with base metals. For this reason teflon O-rings separated the window from the cell, which was brass, and from the window holders. The rim of the circular window was separated from the metal by a 1/8

inch air gap. Eight machine screws fastened each window holder to the cell, clamping the window firmly in place. The cell was heated and the window holder tightened into position until the cell was vacuum tight. Within several days the cell began leaking. When taken apart and examined it was discovered that the window had softened and flowed under the heat and pressure until the rim contacted the inner edge of the cell. The reaction of the AgCl and the brass developed several pin holes in the window as well as pits and shallow channels in the metal. Thereafter a teflon rim as well as O-rings became a part of the gasket set, and a new cell was constructed of monel, an alloy fairly resistant to AgCl corrosion.

This initial experience with the reaction between silver chloride and metals, however, resulted in delaying the primary investigation for a considerable time while an effort was made to obtain a vacuum seal with teflon gaskets in a cell heated to 300°C. For relatively short periods the cell would remain vacuum tight but eventually the teflon gasket would flow and leaks develop. It was discovered that approximately 160°C marked the limit of dependability of teflon although its melting point is much higher. Ultimately it was concluded that, corrosive action or not, the teflon gaskets could not be used.

Aware that monel was less reactive than brass to AgCl, the decision was made to eliminate gaskets entirely and place the window in direct contact with the metal surfaces. The window was pressure sealed to the heated cell by putting it in position and tightening the window holder firmly against it. Later examination showed that the pressure

of the holder had intruded the window into the cell proper. This procedure resulted in a cell which remained vacuum tight to 400°C and developed no leaks during a month of use. When the cell was dismantled, the window showed only slight signs of deterioration from the chemical action between it and the monel. A diagram of the manner in which the window was held in position is shown in Figure 11.

Effect of source on windows. Exposure of silver chloride to ultraviolet radiation causes the crystal to change color slowly, become less transparent, and eventually darken to opacity. However, the window continues to transmit satisfactorily in the infrared for some time even after becoming opaque to visible light. The use of AgCl windows in the vacuum accelerates the darkening process. In the atmosphere windows placed 4 inches from a Nernst glower operating at 100 watts showed only a slight purple discoloration after 40 hours. In the vacuum, windows placed five times as far from the glower showed deep discoloration throughout their volumes after only a few hours.

To reduce the damage of the source ultraviolet radiation an Eastman Kodak 220 long wavelength pass filter was placed between the cell and the source. This filter is optically polished silver chloride coated with silver sulfide. After a few hours operation in the vacuum with the heated cell on one side and the hot source on the other, the transmission of this filter was reduced 75 to 80 per cent and it had to be removed. Thereafter the source effect was kept to a minimum by exposing the windows as little as possible. When it was not necessary for radiation to pass through the cell it was lifted

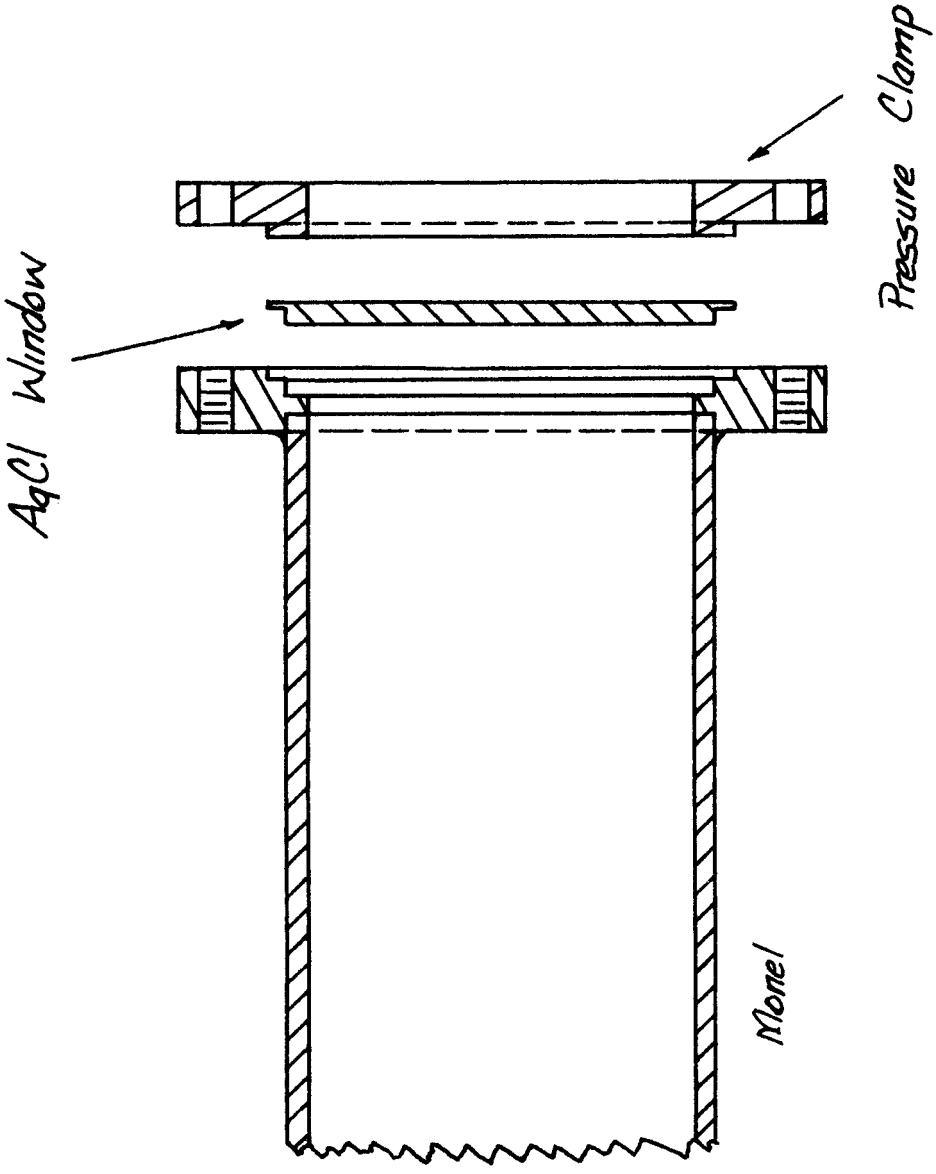

Figure 11. The 17.653 cm Cell.

out of the beam by the elevator. Perhaps the most satisfying solution to the problem would have been to position the cell in the beam beyond the prism section after the ultraviolet radiation had been filtered out, but this was not possible with the existing optical path.

Effect of CO on the windows. The advantages of a vacuum instrument are often finely balanced against the problems its use engenders. A vacuum tight cell is mandatory when working with a corrosive gas like hydrogen fluoride. Using a cell in the atmosphere a minute leak might go undetected and be of no consequence as long as the sample gas is kept below 70 cm of pressure. With the cell placed in a vacuum chamber, however, no leaks can be tolerated. A procedure involving the use of carbon monoxide was practiced for testing the cell. It was time consuming but satisfactorily insured a safe cell. However, the windows usually became opaque to the infrared before it could be used for long. It was not until the effect of source radiation on the windows had been cleared up that it became apparent an additional effect was contributing to window opacity. It was discovered that the carbon monoxide gas was apparently undergoing a chemical reaction with the silver chloride of the windows and depositing on their inner surfaces a dark grey powder not transparent to the infrared. This was a surface effect and could be removed by scraping with a knife. The coating was thickest and blackest in a small spot most immediate to the N_2 nozzle where the gas was most likely to condense against the cool window; otherwise the inner surface was covered uniformly.

These windows were returned to transparency in the following manner: the powder was gently scraped off with a knife edge; the window was washed in soap and water; this was followed by polishing with CeO_2 and alcohol and buffing with a soft cloth.

Effect of pressure and temperature on windows. These topics will be discussed together because it was not possible to separate their consequences. The manifestation of their effect was a mosaic on the window seemingly caused by dislocations of molecular blocks of surface AgCl. The optical result was a diminished transmission and a defocused beam.

Upon placing a cell with clear, highly polished silver chloride windows into the partially evacuated spectrometer the following sequence of events occurred. As the cell was heated to 200°C the windows began to assume a gelatin-like appearance, particularly near the edges. As the temperature increased the effect became more pronounced and the window began to grow translucent. Silvering of the outer surface of the window began occurring near 300°C. (This was later partially removed by wiping with alcohol.)

If for any reason these hot windows were exposed to a pressure of 25 cm Hg or more--particularly in the presence of moisture--the window took on a spider-web appearance which developed rapidly into a wrinkled and pockmarked surface. This blotching of the surface looked like dry cracked mud in an evaporated lake bed. The effect was greatest if the spectrometer was opened to the atmosphere. Then, in addition to the blotching, the outer surface of the window became

concave. Examination of dismantled cells in this case usually showed the inner surface of the window to be smooth, unmarked, and flat. The conclusion: the wrinkling mosaic effect is the direct consequence of exposing the hot silver chloride window to moisture and pressure. Once the problem of the leaking gaskets was solved and it was no longer necessary to open the spectrometer to the atmosphere so frequently the magnitude of this effect was reduced considerably--although never eliminated.

In this connection, the cooling of the windows by streaming nitrogen across them was discontinued for three reasons: (1) the mirrors became coated with oil from the oil pumped nitrogen; (2) the presence of the nitrogen or its associated oil vapor caused the Nernst glower to be erratic and burn out after only a few hours operation; (3) the only noticeable effect of the actual cooling was that it may have been furnishing a condensation site for the hot gas resulting in the powder coating on the inner surface of the window.

Other heating effects. Although it was initially planned to heat the hydrogen fluoride to 400°C, the final temperature at which the measurements were made was 225°C. Above this temperature the windows deteriorated too rapidly to allow long recording periods.

There are serious objections to placing a piece of hardware of the cell's volume within the spectrometer proper and then heating it. Even though the cell is within a vacuum it dissipates heat to its surroundings by radiation and by conduction through the support

upon which it is mounted. After 24 hours the tank in which the instrument is enclosed became hot to the touch. After a 30 hour recording run it was necessary to open the instrument and cool it. The immediate results of this heating were to melt the glyptol seal on the CO cell and reduce the effectiveness of the detector. The response and sensitivity of the thermocouple were reduced and the noise increased considerably. Following exposure to high ambient temperature the thermocouple did not regain its previous performance level even upon cooling. Furthermore, it is possible that the heat may have a detrimental effect upon the grating. The plastic of the replica grating restricts its use to environmental temperatures of less than 50°C.

3. Operating Conditions

The observations of the lines J(10) through J(16) were made with the vacuum instrument pumped down to approximately 150 microns pressure. The grating was driven at 1/2 degree per hour which in this region corresponds to about 15 cm^{-1} per hour. This was considered slow enough to permit use of responses 3 and 4 on the amplifier.

Transmittance measurements were made on the hydrogen fluoride at four pressures--15, 30, 60, and 120 cm Hg. The gas was contained in a 17.653 cm cell of monel having pressure sealed silver chloride windows. A diagram of the cell showing the detail of the window mounting appears in Figure 11, page 68. The HF was admitted and withdrawn from the cell through heated monel tubing connecting the cell with the pressure transfer and gas handling system outside the vacuum chamber.

The hydrogen fluoride was maintained at 225°C. A 250 watt cal-rod unit was wound about the body of the cell and provided sufficient heat to raise the cell temperature to 300°C if desired. The temperature was controlled by a variac and measured with a potentiometer mounted beside the spectrometer.

4. Calibration

The spectral region between 15 μ and 24 μ was calibrated using carbon monoxide as a secondary standard. The third, fourth, and fifth orders of the 4.67 μ fundamental band have their band centers at 14.01 μ, 18.68 μ, and 23.35 μ, respectively. The third and fifth orders bracket the seven HF lines measured; the fourth order lies between the two HF lines J(12) and J(13).

With this spectrometer, as with the far infrared instrument, it is not possible to measure accurately the angular distance between central image and any line further than 17° away. Consequently the grating constant and an angle are determined by the simultaneous solution of two grating equations as described in the calibration section of the far infrared spectrometer. Ideally, one would prefer to restrict this method to a small angular range because K must be assumed constant throughout the range. Since this restriction could not be applied in this case, the worst possible situation was chosen. Using lines of known frequency from the third and fifth orders of CO, a grating constant, K, was calculated for the entire region. This grating constant together with a known carbon monoxide line from the fourth order of the fundamental band was then used to determine the line

positions and frequencies of the unknown lines of hydrogen fluoride.

The justification for using the same grating constant over such a large spectral region is that it gave satisfactory results. Using it as described, it was possible to predict the frequency of every carbon monoxide line in the fourth order to within 0.02 cm^{-1} of the value given by Rank, Guenther, Saksena, Shearer, and Wiggins (1957). Also the CO lines of the fifth order could be determined with a similar accuracy. The procedure was further verified by correctly predicting most of the lines of the 15 μ CO_2 band to within 0.03 cm^{-1} of the value determined by the Ohio State group (Rossman, Rao, and Nielsen, 1956). Thus verification of the calibration system was secured throughout the spectral range in which the HF lines were observed.

The carbon monoxide used for calibration was placed in a 10 cm glass cell at a pressure of 20 cm Hg. Sodium chloride windows were vacuum sealed to the cell with glyptol and the cell mounted on the elevator within the spectrometer as previously described. The calibration lines were recorded at the same time as the hydrogen fluoride lines in the following manner. The grating was turned to the 15 μ spectral region by the positioning drive preparatory to a recording run and the CO cell raised into the radiation beam. The rotation of the grating by the scanning drive was then started and the third order CO lines recorded. When the grating rotated to the region of an HF line--which had previously been located during preliminary high speed scans--the HF cell was lowered into the beam and the line recorded. As the grating continued to rotate the other hydrogen fluoride lines,

as well as the fourth and fifth orders of the carbon monoxide fundamental, were recorded in turn. In this way HF and CO lines were placed in sequence upon the chart paper during a single, continuous rotation run of the grating. Because the scanning drive of the instrument is capable of an extremely high degree of reproducibility, it is also possible to move rapidly between the HF lines, which are approximately 40 cm^{-1} apart, and then to scan slowly across the line of interest. The difference between this technique and that of the continuous slow speed scan in determining line positions was well within experimental error, and both methods were used.

Data Taking and Handling

The technique for the determination of line centers, base lines, and zero lines has been described in the section on data handling in the far infrared spectrometer. The same procedure was used on the lines measured with the vacuum instrument. The base line varied throughout the spectral region, approaching the zero line at the longer wavelength end. The zero line, however, remained fairly constant indicating a minimum of stray light reaching the detector.

Instrumental broadening is a problem in this instrument as in the far infrared spectrometer. The slits must be opened wider than is preferred for high resolution studies, primarily because of the poor transmission properties of the silver chloride windows about 20 μ. The physical slit-widths varied from 0.7 mm for J(15) to 1.5 mm for J(10).

If the grating equation is differentiated the resulting expression is

$$\Delta\nu = \frac{\nu s \cot \theta}{2f}$$

where s is the physical slit width and f is the focal length. $\Delta\nu$ yields a measure of the spectral slit width for a given region of the grating and a given physical slit width. These widths result in theoretical spectral slit-widths of the order of 0.35 cm^{-1} throughout the region. With slits this wide an experimental slit function could not be satisfactorily determined. As in the case with the longer wavelength lines, it was felt that these high J lines were too narrow to be corrected for instrumental broadening.

CHAPTER V

ABSORPTION FREQUENCIES

I. THEORY

The wave equation for the rotation and vibration of a diatomic molecule has the form

$$\frac{1}{M_1} \nabla_1^2 \psi + \frac{1}{M_2} \nabla_2^2 \psi + \frac{8\pi^2}{h^2} (W - U(r)) \psi = 0 \qquad (1)$$

in which ψ is the wave function for the nuclear motion and U(r) is the electronic potential energy function. A detailed solution of this equation as carried through by Pauling and Wilson (1935), gives the energy levels of the diatomic molecule. If cubic and higher order terms in the potential function are taken into account (Herzberg, 1950), the rotational term values in a given vibrational level are found to be

$$F_v(J) = B_vJ(J+1) - D_vJ^2(J+1)^2 + H_vJ^3(J+1)^3 + \ldots \qquad (2)$$

For the lowest vibrational state, v = 0, the rotational constants B_o, D_o, and H_o are obtained directly from the pure rotation spectrum.

If the molecule were a rigid rotor the term $B_vJ(J+1)$, where B is inversely proportional to the moment of inertia, would be the complete solution of its wave equation. However, the molecule is capable of vibrating along the axis joining the two nuclei and is therefore better represented as a rotating system consisting of two mass points connected by a massless spring. In such a system as the

rotation of the molecule increases, the internuclear distance, and consequently the moment of inertia, increases also. The second term, $D_v J^2(J+1)^2$, arises from this centrifugal stretching of the molecule.

The final term, $H_v J^3(J+1)^3$, arises in part from the Coriolis force which is due to the interaction of the vibrational and rotational motions of the molecule. As the rotating diatomic molecule stretches its rotation is slowed down and as the molecule contracts its rotation is speeded up by Coriolis forces. Normally this term is not necessary in the analysis of a rotation spectrum, but in the case of hydrogen fluoride it is required for the correct positioning of lines arising from transitions between the higher energy levels.

According to quantum theory the absorption of electromagnetic energy produces a transition from a lower to a higher energy level. The frequency of the absorbed radiation is

$$\nu = \frac{E'}{hc} - \frac{E}{hc} = F(J') - F(J) \qquad (3)$$

for transitions between rotational levels. In order to calculate this frequency it is necessary to know the selection rule for the rotational quantum number J. This selection rule is obtained by evaluating the matrix elements of the dipole moment. In the present case if μ is the constant dipole moment of the rotor the matrix elements in spherical coordinates are

$$\begin{aligned}
\mu_x\,(J'M'JM) &= \mu \int \psi^*_{J'M'} \sin\theta \cos\varphi\, \psi_{JM}\, d\tau \\
\mu_y\,(J'M'JM) &= \mu \int \psi^*_{J'M'} \sin\theta \cos\varphi\, \psi_{JM}\, d\tau \\
\mu_z\,(J'M'JM) &= \mu \int \psi^*_{J'M'} \cos\theta\, \psi_{JM}\, d\tau
\end{aligned} \qquad (4)$$

It is evident that these matrix elements will be different from zero--that is, absorption by the rotor can occur--only when the molecule possesses a permanent dipole moment, μ. A more detailed examination of these integrals (Herzberg, 1950) shows that they vanish except when

$$J' = J \pm 1 \tag{5}$$

Since J' refers to the upper state only $J' = J+1$ need be considered for absorption and the wave number of the absorbed light quantum is

$$\nu = F(J+1) - F(J) \ . \tag{6}$$

Substituting in the rotation term values for the vibrational ground state, the absorption frequency is found to be

$$\nu(J) = 2B_o (J+1) - 2(2D_o - H_o) (J+1)^3 + 6H_o (J+1)^5 \ . \tag{7}$$

II. LINE POSITIONS

The center frequencies of seventeen absorption lines in the pure rotational spectrum of hydrogen fluoride were measured. Ten of these lines--designated by the rotational quantum numbers of the initial states and listed as J(0) through J(9)--were observed on the far infrared spectrometer. The other seven, J(10) through J(16), were observed on the vacuum instrument. The measurements were made of J(0) through J(9) at 3 cm pressure in a 9.695 cm cell. The lines J(10) through J(16) were measured at 30 cm pressure in a 17.653 cm cell. All measurements were performed a minimum of three times.

All frequencies are listed as vacuum wave numbers. These lines measured on the vacuum spectrometer needed no correction, but the first

ten lines were measured in air and required correction for the wavelength variation with the index of refraction of air. Where possible water line frequencies given in vacuum wave numbers were used for calibration. This procedure also resulted in measured HF lines which required no correction to vacuum wave numbers. This was possible on J(0) and J(1) where the water lines measured by Yaroslavskii and Stanevich (1958) were used for calibration. It was further possible on J(6), J(7), J(8) and J(9) where the water lines reported by Rao, Brim, Sinnett, and Wilson (1962) were used as standards and on lines J(2), J(3), J(4), and J(5) which were calibrated by the water lines reported by Randall, Dennison, Ginsburg, and Weber (1937).

A rotational analysis of the seventeen absorption lines, formulated on the theory discussed above, was carried out. The observed frequencies were fitted to equation (2) by the method of least squares programed on an IBM 1620 computer at The University of Tennessee's Computing Center. Table VI lists the observed and calculated line centers for the pure rotation spectrum of hydrogen fluoride. In Table VII the line center positions observed in this work are compared with the positions reported by other workers.

Separate measurements on the lines observed with the vacuum spectrometer showed agreement within $\pm$ 0.04 cm^{-1}. This precision was not achieved on the far infrared instrument, however. There measured line centers showed frequency variations of the order of tenths of cm^{-1}'s. This is attributed to the use of atmospheric water vapor for a calibration standard. The water lines are so pressure dependent and

TABLE VI

VACUUM WAVE NUMBERS OF THE PURE ROTATION SPECTRUM
OF HYDROGEN FLUORIDE

Transition (J)	Observed (cm^{-1})	Calculated (cm^{-1})	Obs.-Calc. (cm^{-1})
0	41.08	41.11	-.03
1	82.19	82.18	.01
2	123.15	123.14	.01
3	164.00	163.95	.05
4	204.62	204.55	.07
5	244.93	244.91	.02
6	285.01	284.96	.05
7	324.65	324.66	-.01
8	363.93	363.96	-.03
9	402.82	402.81	.01
10	441.13	441.17	-.04
11	478.94	479.00	-.06
12	516.20	516.24	-.04
13	552.85	552.85	.00
14	588.82	588.80	.02
15	624.07	624.04	.03
16	658.54	658.53	.01

TABLE VII

COLLECTED VALUES OF HF PURE ROTATION LINE CENTERS

Transition (J)	Rothschild[a] (cm^{-1})	Nielsen and Smith (cm^{-1})	Present Work (cm^{-1})
0	41.30		41.08
1	82.35		82.19
2	122.83		123.15
3	163.97		164.00
4	204.59		204.62
5	245.09		244.93
6	285.14		285.01
7	324.75		324.65
8	364.17		363.93
9	403.06		402.82
10	441.28	441.21	441.13
11		479.00	478.94
12		516.27	516.20
13			552.85
14		588.90	588.82
15		624.13	624.07
16			658.54

[a]Private communication.

subjected to so much overlap and interference that even under controlled conditions of pressure and temperature they would not be the most suitable standard for high precision work. In the present work, water vapor remaining in the instrument after a short drying period furnished the calibration spectrum. In dry weather the lines were sharp and relatively free of interference; in humid weather this was not true. Even in the best of circumstances it was difficult to attain the exact conditions of water vapor pressure and temperature to reproduce precisely the spectrum of an earlier day. In spite of these difficulties, however, and because the measurements were many times repeated over a ten month period, the line center values finally arrived at are believed to be correct to within 0.07 cm^{-1}.

It should be noted that the positions of J(6) and J(7) were particularly difficult to determine precisely. These are strong, sharp lines relatively free of water and yet over a period of a month their frequencies varied by as much as 0.2 cm^{-1}. Increasing the pressure of the HF to 30 cm pressure uniformly reduces the transmittance as much as 50 per cent throughout the region of these lines. The cause of this energy attenuation is not known at this time. Two possible explanations have been considered: (i) strong polymer absorption may occur in this region; or (ii) the HF may react with the polyethylene window to form a surface fluoride which absorbs strongly at these frequencies. Neither explanation is completely satisfactory and further investigation is indicated. This apparent absorption may account for the center frequency shifts observed at lower pressures.

III. SPECTROSCOPIC CONSTANTS

The coefficients of the rotational analysis performed on the absorption line centers have been discussed above. These rotational constants, together with the values obtained by other workers are listed in Table VIII. It will be noted that the B_o value is slightly larger than that reported by Herget (1962). His value is an average of two values--20.5609 cm^{-1} for the 0-1 transition and 20.5557 cm^{-1} for the 0-2 transition. The present value agrees with the value determined in the fundamental band.

IV. PRESSURE SHIFTS

The seven spectral lines measured on the vacuum instrument were examined for the effect of pressure upon the position of the line center. Five of the lines, J(11) through J(15) were measured at pressures of 15, 30, 60, and 120 cm Hg. No measured effect upon line center position was observed for this range of pressures.

TABLE VIII

THE ROTATIONAL CONSTANTS OF HYDROGEN FLUORIDE

Constant	Present Work (cm^{-1})	Herget, et al. (cm^{-1})	Rothschild (cm^{-1})
B_o	20.561	20.558	20.567
D_o	0.00213	0.00215	0.00208
H_o	1.418×10^{-7}	1.75×10^{-7}[a]	---

[a]Kuipers (1956).

CHAPTER VI

LINE INTENSITIES

I. THEORY

1. General Considerations

In many applications of spectroscopy it is informative to describe an absorption line by the parameters of line strength, shape, and width. The line strength, which is related to the quantum mechanical transition probability, is particularly useful in studying population distributions in gases. This together with a knowledge of the shape and width of a spectral line may lead to information concerning intermolecular forces.

The ideal way of examining the strength, shape and width of a line would be to employ a spectrometer of sufficiently high resolving power that the true shape of the line could be observed directly. Such resolution is available only in the microwave region. However, several methods have been devised for obtaining the line parameters in spite of the instrumental modifications to the true line shape. The basic procedure used in the present work and outlined below has been discussed in detail by Benedict, Herman, Moore, and Silverman (1956).

2. Line Strength

The energy absorbed from an incident beam of radiation of one cm^2 cross section is

$$I_{abs}^{JJ'} = - \rho_{JJ'} N_J B_{JJ'} \Delta \ell \, hc \, \nu_{JJ'} \qquad (1)$$

where $\rho_{JJ'}$ is the density of the incident beam

N_J is the number of molecules per cc in the lower state

$B_{JJ'}$ is the Einstein transition probability of absorption

$\Delta \ell$ is the thickness of the absorber

h is Planck's constant

c is the velocity of light

$\nu_{JJ'}$ is the frequency of the transition.

The Einstein transition probability is directly proportional to the square of the matrix element of the dipole moment and is given by

$$B_{JJ'} = \frac{8\pi^3}{3h^2c} \left| \mu(J'M'JM) \right|^2 . \qquad (2)$$

It is shown by Herzberg (1950) that the number of molecules in a given rotational state is

$$N_J = N \frac{hcB}{kT} (2J+1) e^{-BJ(J+1)hc/kT} . \qquad (2a)$$

Let $I_o^{JJ'} = c \rho_{JJ'}$ be the intensity of the incident radiation; then

$$I_{abs}^{JJ'} = - I_o^{JJ'} \Delta \ell \frac{8\pi^3}{3hc} N_J \nu_{JJ'} \left| \mu(J'M'JM) \right|^2 \qquad (3)$$

The absorption coefficient, k_ν, is defined by the relation

$$dI = - k_\nu I \, dl , \qquad (4)$$

which states that the amount of radiation removed from the beam is proportional to the product of the total radiation intensity and the path length through the absorber. Using equation (3),

$$k_\nu = \frac{8\pi^3}{3hc} N_J \nu_{JJ'} \left| \mu(J'M'JM) \right|^2 . \qquad (5)$$

Thus far it has been assumed that the incident beam is monochromatic

and the transition perfectly sharp with $\nu_{JJ'}$ a single frequency. This is not true, however, and k_ν must be replaced by an integrated absorption coefficient over all frequencies at which absorption occurs. Furthermore, the degeneracy of the rotational energy levels of the diatomic molecule introduces a factor of (2J+1) so that the expression for the energy removed from the beam becomes

$$\int_0^\infty k_\nu \, d\nu = \frac{8\pi^3 N_J}{3hc\,(2J+1)} \nu_{JJ'} \left| \mu(J'M'JM) \right|^2 . \qquad (6)$$

This equation defines the integrated absorption, S, of a line where

$$S = \int_0^\infty k_\nu \, d\nu \quad . \qquad (7)$$

For gases at low densities S is directly proportional to the number of molecules of the absorber in the optical path. Thus

$$S = S'\rho \cong S^\circ P \qquad (8)$$

yields the line strength, S°, where P is the pressure in atmospheres.

3. Equivalent Width and Working Assumptions

Integration of equation (4) gives Lambert's law

$$\frac{I}{I_o} = e^{-k\ell} \qquad (9)$$

where I_o is the intensity of the incident radiation, I is the intensity of the transmitted radiation, and ℓ is the path length through the absorber. The ratio I/I_o is called the transmittance and is designated by the symbol T.

$$T = \frac{I}{I_o} = e^{-k_\nu \ell} . \qquad (10)$$

The transmittance is measured directly from the displayed spectral line.

The equivalent width, W, is defined by the relation

$$W = \int_0^\infty (1 - T)\, d\nu \tag{11}$$

which is the integral of the fractional energy removed from the incident radiation--or in other words, the area under the absorption curve. The range of integration should include all frequencies for which (1 - T) is different from zero. When this range covers only a single line, W is the equivalent width of that particular line. For hydrogen fluoride the distances between lines is approximately 40 cm^{-1} and for the pressures used in the present work the assumption was made that there is no line overlap so that W is indeed the equivalent width of a particular line.

An assumption was also made concerning the shape of the spectral line. Near the line center, ν_o, the absorption coefficient is generally considered to be represented by the Lorentz line shape formula

$$k_\nu = \frac{S}{\pi} \quad \frac{\gamma_L}{(\nu - \nu_o)^2 + \gamma_L^2} \tag{12}$$

where γ_L is the Lorentz half-width. It has been found in practice (Herget, 1962) that an actual line better fits a modified form of this expression. However, since the measurements in this present work did not extend into the far wings of the lines, it was assumed that the lines were truly Lorentzian throughout the region in which they were measured. The half width is proportional to the frequency of collisions and hence to a good approximation proportional to the total pressure or density of a pure gas, so

$$\gamma_L \cong \gamma^o P \quad . \tag{13}$$

The collision frequency, and hence γ^o, is dependent upon the specific intermolecular forces of the gas in question.

It was further assumed throughout these intensity studies that Doppler broadening made on contribution to the line breadth. Heitler (1944) shows that the half-width of a Doppler broadened line is

$$\gamma_D = \left[2kT (\ln 2)/Mc^2\right]^{\frac{1}{2}} \quad . \tag{14}$$

Since Herget (1962) found no effective Doppler broadening in the fundamental band of hydrogen fluoride at about 4000 cm^{-1}, it appeared reasonable to expect no contribution at the much lower frequencies of the pure rotational lines.

4. The Method of Equivalent Widths

For lines with the Lorentz shape the equivalent width is given by the Landenburg-Reiche equation (Landenburg and Reiche, 1911), namely

$$W = 2\pi\gamma_L f(x) , \tag{15}$$

$$f(x) = xe^{-x}\left[J_o(ix) - i J_1(ix)\right] \tag{15a}$$

$$x = \frac{S\ell}{2\pi\gamma_L} = \frac{S^o\ell}{2\pi\gamma^o} \tag{15b}$$

where $J_o(ix)$ and $J_1(ix)$ are the Bessel functions of order 0 and 1.

From equation (15) it is evident that the equivalent width, W, is directly proportional to the pressure through the Lorentz half-width. This pressure dependency is illustrated in Figure 12, which shows the HF absorption line J(3) at three pressures. In each case where the pressure is doubled the measured area under the absorption

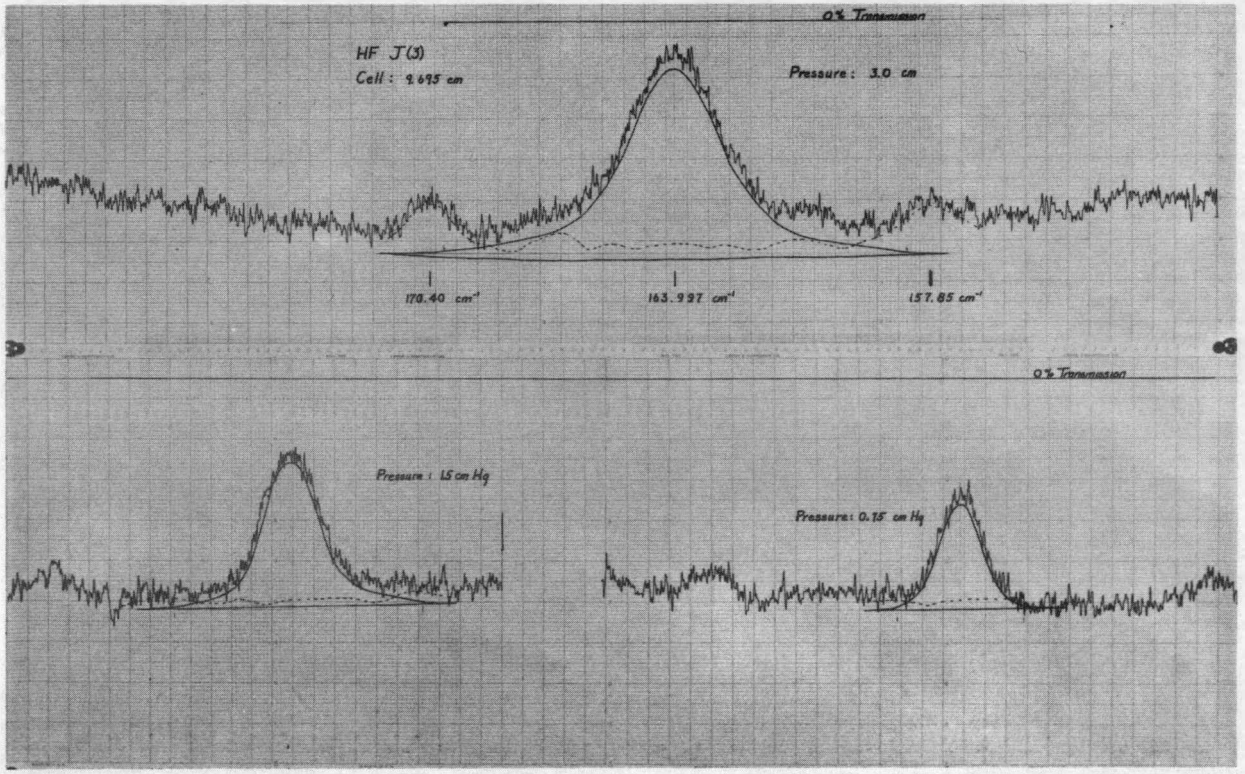

Figure 12. Variation of per cent absorption, absorption area, and half width of J(3) with pressure.

curve is also doubled. For a pure gas, since both S and γ_L are proportional to the pressure, the quantity **x** is independent of pressure and can be varied only by varying the path length. Consequently to determine both S° and γ° for a particular line, it is necessary to determine W at more than one path length. For values of $x < 0.5$ the "linear region" of the curve is approached where

$$f(x) \cong X\,(1 - X/2 + \ldots) \tag{16}$$

and

$$W^\circ = S^\circ \ell\,(1 - W^\circ/4\pi\gamma^\circ + \ldots)\,. \tag{16a}$$

Thus measurements of equivalent widths at values of **x** sufficiently small so the second term in equation (14) may be neglected yield the line strength directly.

At large values of **x** the "square-root region" is approached where

$$f(x) \cong (2X/\pi)^{\frac{1}{2}}\,(1 - 1/8x + \ldots) \tag{17}$$

and

$$W^\circ \cong 2(S^\circ\gamma^\circ\ell)^{\frac{1}{2}}\,(1 - \pi\gamma^\circ/W^{\circ 2} + \ldots) \tag{17a}$$

The correction term can usually be neglected so that the product $S^\circ\gamma^\circ$ is obtained directly.

In the experimental determination of the equivalent width the absorption is measurably above the noise over only a relative small frequency range near the line center while the wings of the lines actually extend far from the line centers. The extent to which the wings of the lines reach out from the line center is shown in Figure 13. Here the water vapor background absorption is dotted in and is seen to join naturally the HF scan far from the center of the HF line. The region

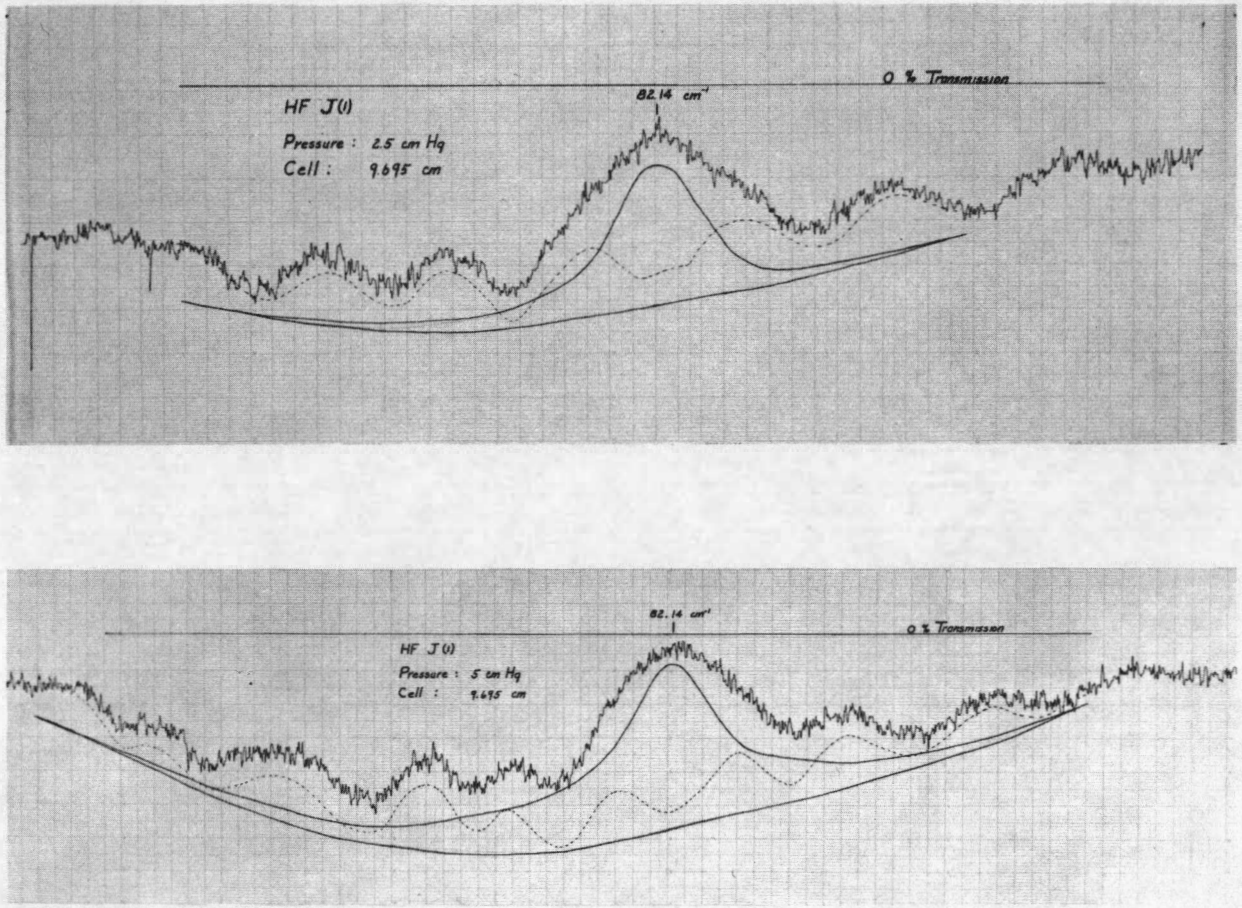

Figure 13. Scan of J(1) at 2.5 cm Hg showing influence of wing absorption.

between line center and intersection with H_2O background is pushed up by HF absorption. The photograph shows, also, how the region of absorption extends much further from the line center as the pressure of the absorbing gas is increased. Even this measurable wing, however, does not include all of the wing absorption. If the assumption is made that the line in question has the Lorentz shape at all frequencies, then the unmeasured wing contribution has been shown to be

$$W_w = \frac{2S^\circ\gamma^\circ P^2 \ell}{\pi g} \left(1 - \frac{\gamma_L^2}{3g^2} + \ldots\right) \qquad (18)$$

where g (cm^{-1}) is the distance from the line center to which the measurements have been carried. For lines in the linear region the true value of W is related to the measured value, W', to first order by

$$W \cong W' \left(1 + 2\gamma_L/\pi g\right) \qquad (18a)$$

and in the square-root region

$$W \cong W' \left(1 + W'/2\pi g\right) . \qquad (18b)$$

A wing correction was applied to all the lines measured in the present work.

II. DATA REDUCTION

1. General

The experimental absorption lines are displayed as curves drawn on chart paper. Three items are measured directly on the chart paper in arbitrary units:

Zero line - the position on the chart paper corresponding to zero per cent transmission.

Base line - the position on the chart paper corresponding to 100 per cent transmission; and

Line values - the positions on the chart paper of points on the spectral curve taken at selected intervals.

These three items, together with the path length through the absorbing gas, were then programmed for the IBM 1620 computer at The University of Tennessee Computing Center. For each line the computer evaluated: (i) the per cent absorption at predetermined intervals along the spectral curve; (ii) the area under the fractional absorption curve--which is W', the equivalent width uncorrected for wing contributions; (iii) the absorption coefficient k_ν (from the relationship $k_\nu = - \ell^{-1} \ln T$) at intervals along the spectral line; and (iv) the area under the absorption coefficient curve--that is, the integrated absorption S. The areas under these two curves were in arbitrary units and were converted to the correct units by multiplying the number of intervals involved in the summation by a wave number per interval scale measured and verified on the chart in the region of the spectral line of interest.

The equivalent widths were then corrected for wing contributions by equation (18) and divided by the pressure in atmospheres of the absorbing gas to give a value of W° for each line. From equation (16) for lines in the linear region, W° gave directly the strength of the line

$$S^\circ = W^\circ / \ell \, . \qquad (19a)$$

From equation (17) for lines in the square root region, W° gave the product

$$S^\circ\gamma^\circ = (W^\circ)^2/4\ell \quad . \tag{19b}$$

In addition to these values obtained from the equivalent widths, the integrated absorption, S, calculated by the computer was divided by the pressure in atmospheres to yield a value of the line strength S° for each line. Equation (19b) was then divided by this value of S° to give

$$\frac{S^\circ\gamma^\circ}{S^\circ} = \gamma^\circ \quad . \tag{19c}$$

Table IX lists the average values of the line parameters obtained by this procedure.

2. Equivalent Widths

The observed values of the equivalent width, W°, although much larger than one might have expected from similar measurements in the near infrared, are believed to be within 15 per cent of their true values. These values are obtained directly from the computer as calculated areas under the absorption curves and are corrected for area losses in the wings. The largest source of error in determining the equivalent width arises in reducing the combined HF and water vapor absorption to a single HF spectral line.

As can be seen in equation (15), theory predicts that the equivalent width, W, should be directly proportional to the pressure for any given line. This was verified in the present work. Observations of lines arising from transitions in the lower energy levels were made with pressures ranging from 0.75 cm Hg to 20.0 cm Hg. For the lines J(11) through J(15) pressures were varied in doubling ratios from

TABLE IX

LINE PARAMETERS

Transition J	Equivalent Width W° (cm^{-1}/atm)	Product $S^\circ\gamma^\circ$ $(cm^{-1})^3/atm^2$	Line Strength S° $(cm^{-1})^2/atm$	Half Width γ° $(cm^{-1})/atm$
2	69.43	124.43	12.12	10.26
3	72.43	135.29	9.20	13.44
4	58.15	87.195	8.96	10.95
5	25.64	16.961	3.40	4.94
6	16.56	7.07	2.80	2.75
7	9.70	2.43	1.26	1.93
8	4.83	0.60	0.58	1.03
9	2.72	0.19	0.30	0.63
10	5.42	0.42	0.53	0.79
11	2.06	0.06	0.25	0.24
12	1.38	0.27	0.11	0.24
13	0.77	0.0084	0.057	0.147
14	0.43	0.0026	0.029	0.091
15	0.18	0.0005	0.0089	0.056
16	0.13	0.00025	0.0076	0.033

NOTE: The transitions J(2) - J(9) were measured in a 9.695 cm cell at 305°K.

The transitions J(10) - J(16) were measured in a 17.653 cm cell at 500°K.

15 cm Hg to 120 cm Hg. The variation of the equivalent width with pressure is illustrated in the graphs of Figures 14 and 15. These figures show also the dependency of the equivalent width upon the transition. For low J values the change in equivalent width with pressure is markedly evident. As the J values increase, the amount of change in the equivalent width with the pressure is reduced. Finally, at the highest transitions observed the change in the equivalent width is so small that it can hardly be measured--even for large pressure changes. In all these cases, however, the equivalent width doubles as the pressure doubles.

3. Linear Region

The region of the Landenburg-Reiche curve in which one makes measurements is governed by the inter-relations of the line strength, the half-width, and the path length. In general the use of a long cell precludes the possibility of making observations in this region. However, examination of J(15) measured in the 17.653 cm cell shows by equation (15b) that

$$x = \frac{S^\circ \mathcal{L}}{2\pi\gamma^\circ} = \frac{.0089 \times 17.653}{2\pi \times .056} = .367 \ .$$

Since for values of $x < 0.5$ the linear region is approached, J(15) measurements may be considered linear. On this bases the line strength is given by equation (19a) as

$$S^\circ = \frac{W^\circ}{\mathcal{L}} = .0101 \ (cm^{-1})^2 \ atm^{-1} \ .$$

Referring to Table IX, page 97, this value of S° is seen to be in reasonable agreement with the value of the line strength determined

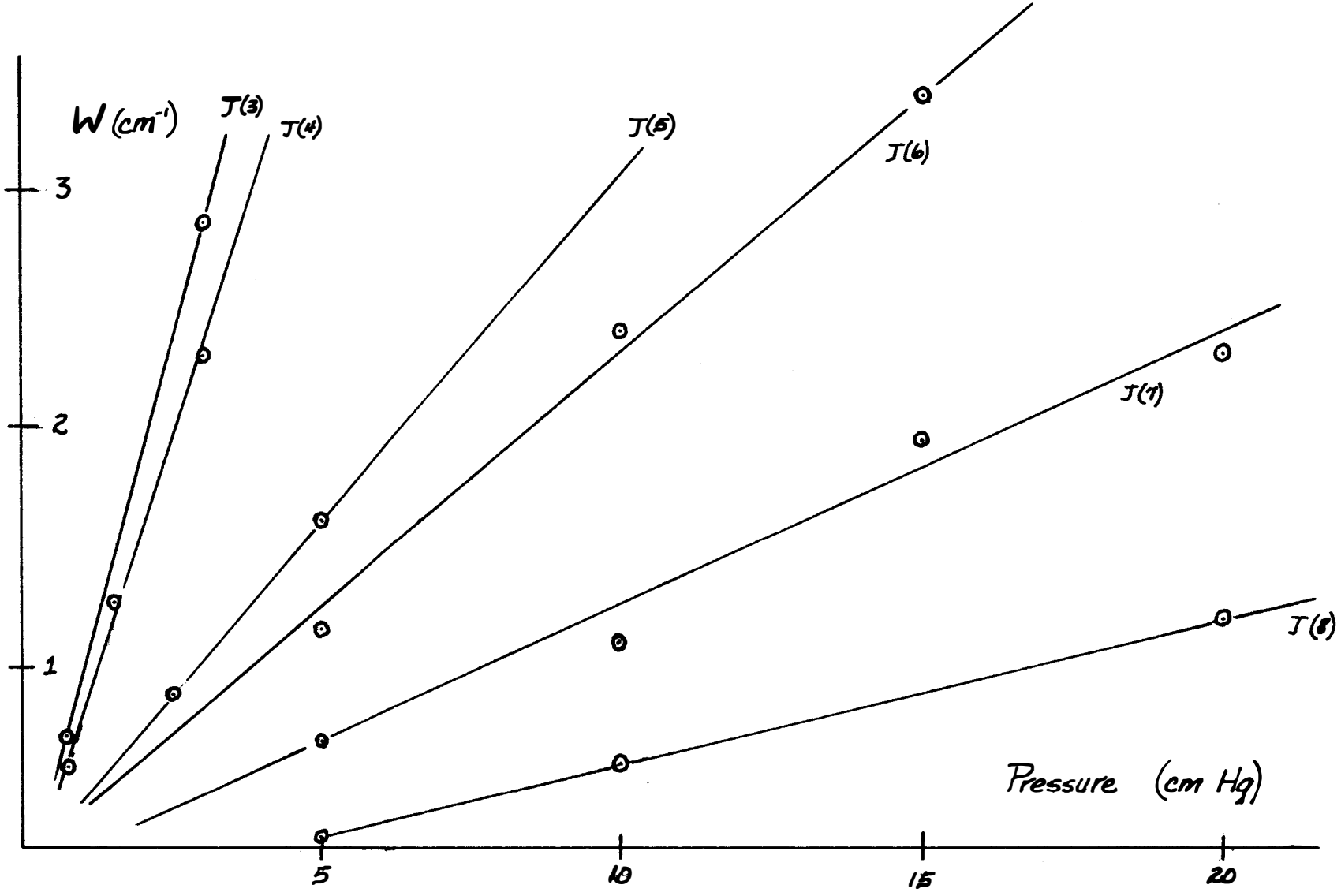

Figure 14. Plot of Equivalent Width vs. Pressure for Lines J(3) - J(8).

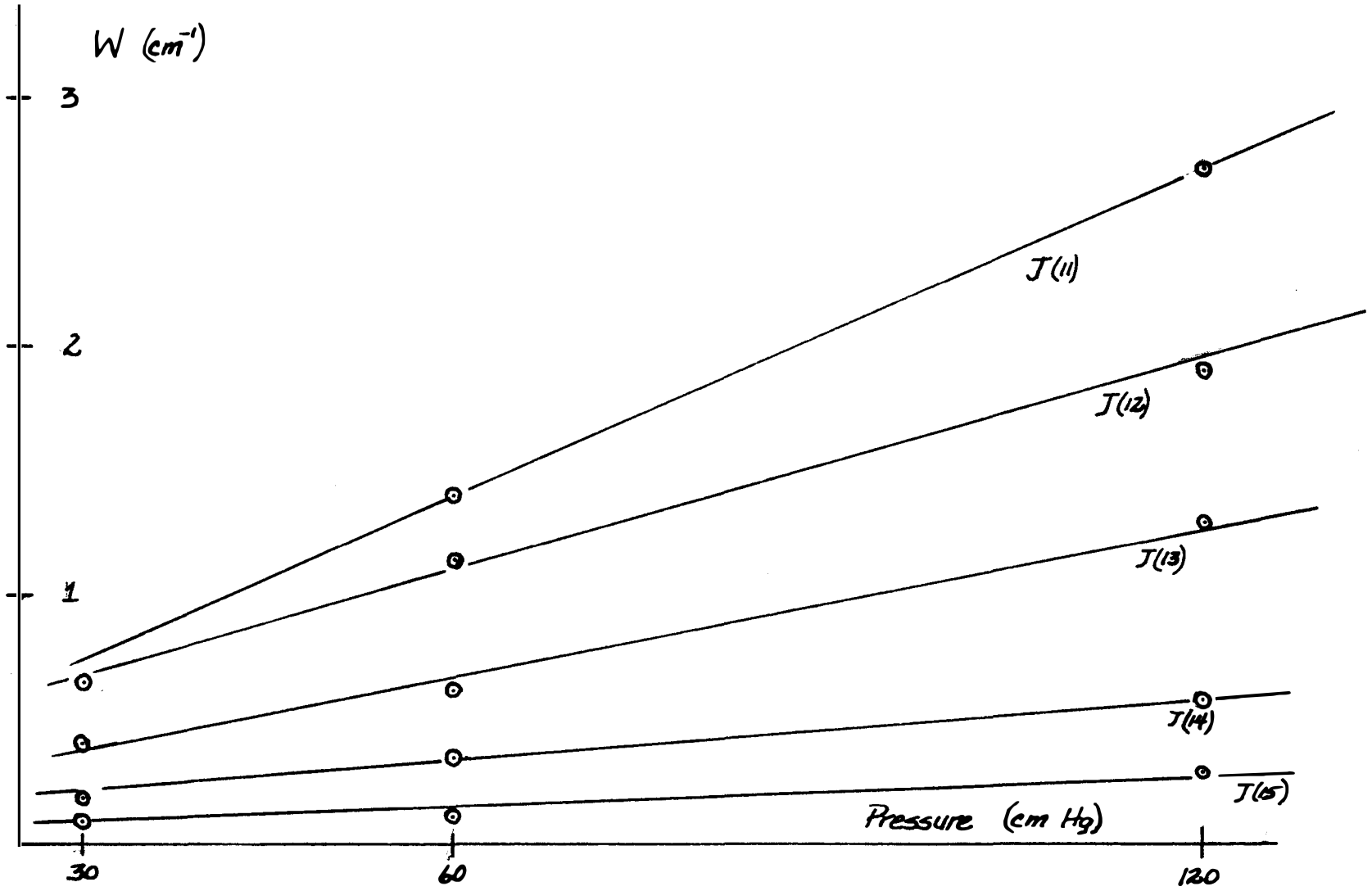

Figure 15. Plot of Equivalent Width vs. Pressure for Lines J(11) - J(15).

directly from the measured value of the integrated absorption.

If J(15) is in the linear region, it is expected that J(16) would be also because of its smaller line strength. Applying the above criteria, x is found to be 0.645 for J(16) which would place J(16) out of the linear region; but a calculation of the line strength by equation (19a) yields $S^\circ = .0074$ in excellent agreement with the measured value; so that J(16) may also be considered to have been measured in the linear region.

A similar examination of J(14) places it also on the borderline but yields a value of $S^\circ = .024$ calculated by the linear region calculation compared to $S^\circ = .029$ measured experimentally.

4. The Short Cell

In an effort to make observations in the linear region for transitions between some of the lower lying energy levels, a 0.37 cm cell was placed in the beam. Measurements were made with this cell by Young (1963) on lines J(7) and J(8), and the following values were obtained:

J	S°	γ°	x
7	6.737	.408	0.81
8	2.212	.267	0.48

It is seen that although J(8) satisfies the criterion and is in the linear region, J(7) is just outside. Nevertheless the line strength of J(7) obtained here agrees quite well with that obtained by another method to be explained later; consequently the linear region approximation appears to be satisfactory for J(7) also.

Short cell measurements could not be obtained on other lines at this time for several reasons. The results of measurements made on J(6) were totally inconclusive. The line reached 100 per cent absorption before values of peak absorption or half width could be obtained and is thus completely out of the range of the linear region when a cell length of 0.37 cm is used. It is a remarkable commentary on the need for a variety of cell lengths when one considers that a cell length of 0.37 cm is a "long" path for a strong line like J(6) while a length of 17.653 cm is a "short" cell for a weak line like J(16). Since measurements could not be made on J(6) with the 0.37 cm cell, no attempts were made on the stronger lines of J(5) through J(2).

An even shorter cell was not employed on these lines at this time because of the lack of rigid window materials which are both transparent in the region and impervious to hydrogen fluoride.

Efforts were made to examine J(9) using the short cell, but the line could not be observed. Again, lack of a suitable window material forestalled further observations for the present. It appears that pressures well above an atmosphere will be needed to look at J(9) in a cell of length sufficiently short to put its spectrum in the linear region.

5. Square Root Region

The values of the line strength, S°, for the rotational lines may be determined by evaluating the equation for the integrated line intensity

$$\int_0^{\infty} \alpha \, d\nu = \frac{8\pi^3 N_J}{3hc\,(2J+1)} \nu \left|\mu\,(J'M'JM)\right|^2 \qquad (6)$$

In this evaluation the value of the permanent dipole moment was known and the dipole moment matrix element was determined by using rigid rotor wave functions. N_J, as given by equation (2b), yields the number of molecules in the Jth rotational energy level for a gas at atmospheric pressure and temperature T. The values of S°, so obtained, are displayed in Table X as S° calculated. For comparison, the values of S° as calculated by the computer from the areas under the absorption coefficient curves, are also listed in Table X--as S° measured. It is evident that there is very little resemblance between the two sets of values. The measured S°'s are generally much lower than predicted by the theory for transitions J(2) through J(9) and much higher than predicted for transitions J(10) through J(16). It must be concluded that these line strengths, determined by measuring the area under the absorption coefficient curve, give little, if any, indication of the true line strength. This is not surprising in view of the fact that most of the spectral lines were showing an apparent absorption of 70 to 100 per cent and no correction was applied for instrumental broadening of the lines. The correction of the observed line by application of a suitable slit function would improve the situation but still might not give a true value of S° because the lines are showing so much absorption. These measurements would be more satisfactorily made with lines showing less than 50 per cent absorption.

TABLE X

COMPARISON OF LINE STRENGTHS CALCULATED FROM RIGID ROTOR APPROXIMATION WITH LINE STRENGTHS MEASURED UNDER ABSORPTION COEFFICIENT CURVE

Transition J	S° Calculated $(cm^{-1})^2/atm$	S° Measured $(cm^{-1})^2/atm$
2	120.0	12.12
3	89.6	9.20
4	48.5	8.69
5	21.3	3.40
6	7.3	2.80
7	2.04	1.26
8	0.45	0.58
9	0.086	0.30
10	0.36	0.53
11	0.11	0.25
12	0.026	0.11
13	0.0064	0.057
14	0.0013	0.029
15	0.0002	0.0089
16	0.00004	0.0076

Kostkowski and Bass (1956) have employed a method of determining the error made in the direct measurement of line parameters when no corrections for instrumental broadening have been applied. They successfully apply the method to lines whose apparent absorption is around 30 per cent. Since the procedure involves the determination of the ratios of the half-widths, γ_L, at two pressures, its application to the present work seemed natural. Efforts to use it, however, were not successful. The corrections resulting from its application were small and made only minor changes in the measured line strengths. Here again, the fault is believed to be with the fact that these lines were measured at such a high percentage of absorption that only a precisely determined experimental slit function would be effective in correcting them to their true shapes.

Although the strong absorption made impossible the determination of the true curve of the absorption coefficient, it did make easier the task of measuring the area under the absorption curve itself. Because of this, the products of the line strengths and the half-widths, $S^\circ\gamma^\circ$, are believed to be valid. In an effort to make use of these products and glean some information concerning the individual line strengths, it was observed that, if values could be obtained for the half-widths, the line strengths could be immediately determined. The following section describes the procedure by which this was accomplished.

6. Determination of Line Strengths and Half Widths

The half-widths of the absorption lines of the fundamental band of hydrogen fluoride have recently been measured in this laboratory

(Herget, 1962). Examination of these half-widths reveal that they have about the same numerical values on both sides of the band center for lines of the same m (where $|m| = (J+1)$ for the R branch and $|m| = J$ for the P branch). This suggests that the half-widths are relatively free of the vibration-rotation interaction and depends primarily on the rotation level alone. If this were true, then the ratios of the half widths from line to line in the fundamental band would be the same as the ratios between corresponding lines in the pure rotation spectrum. Assuming this as a working hypothesis, it then became necessary to determine the value of only one half-width in the pure rotation spectrum and the others would be known also. It was possible to obtain a value of γ° for J(8) in the following manner.

The line strength, S°, was measured for J(8) in the 0.37 cm cell and found to be 2.212 $(cm^{-1})^2$ atm^{-1}. Since the S° values are invariant to cell length, the J(8) line strength must have the same value, 2.212 $(cm^{-1})^2$ atm^{-1}, in the 9.695 cm cell. The value of the product $S^\circ\gamma^\circ$ for the longer cell is known from the equivalent width measurements. Thus γ° of the line measured in the 9.695 cm cell can be determined by dividing this $S^\circ\gamma^\circ$ product by the value of S° obtained in the small cell. The resulting value of γ° is 0.271 cm^{-1} atm^{-1}. The half-widths of the rotational spectrum, $\gamma^\circ_{rot.}$, were then obtained for the lines J(7) - J(2) by the relation

$$\frac{\gamma^\circ_{VR}\,(J+1)}{\gamma^\circ_{VR}\,(J)} = \frac{\gamma^\circ_{rot.}\,(J+1)}{\gamma^\circ_{rot.}\,(J)} \quad . \tag{20}$$

The line strength, S°, of each of these lines can now be found by dividing the product, S°γ°, obtained from the equivalent width measurements, by the proper γ° just obtained. Table XI lists these results, together with the half widths from the fundamental band.

Comparison of the line strengths determined here with those calculated from theory and those measured directly under the absorption coefficient curve can be made by referring to Table X, page 104. These are seen to compare favorably with the calculated values although larger in every case. Figure 16 shows the variation of line strength, S°, with transition, J, for the three methods of determining S°. The line strength from measured areas under the absorption coefficient curve appears as a dotted curve at the bottom of the page. It appears to have no relation to the other two curves. The curve obtained by calculating S° from the rigid rotor approximation appears to have its maximum at J(2) as indeed it should. The curve obtained from evaluating S° in the manner described above has greater values at every point than the theoretical curve and has the maximum shifted to J(3). The cause of this difference may arise from the great anharmonicity of the HF molecule; it is far from a rigid rotor. Even though the values of S° for J(2), J(3), and J(4) are close together, it is believed that the shifting of this maximum lies outside the range of experimental error and further investigations into the existence and the cause for this shift is indicated.

The line strengths obtained by the above procedure yield results which show approximate agreement with the theoretical values and are

TABLE XI

LINE STRENGTHS AND HALF WIDTHS FOR SOME PURE ROTATIONAL LINES

Transition J	Half-Width Fundamental cm^{-1}/atm	Half-Width Rotation cm^{-1}/atm	$S^\circ\gamma^\circ$ $(cm^{-1})^3/atm^2$	S° $(cm^{-1})^2/atm$
2	.479	1.236	128.93	104.77
3	.408	1.053	123.63	117.40
4	.310	.800	83.84	103.55
5	.240	.620	16.96	27.35
6	.166	.428	7.68	17.94
7	.135	.348	2.43	6.98
8	.105	.271	0.60	2.21

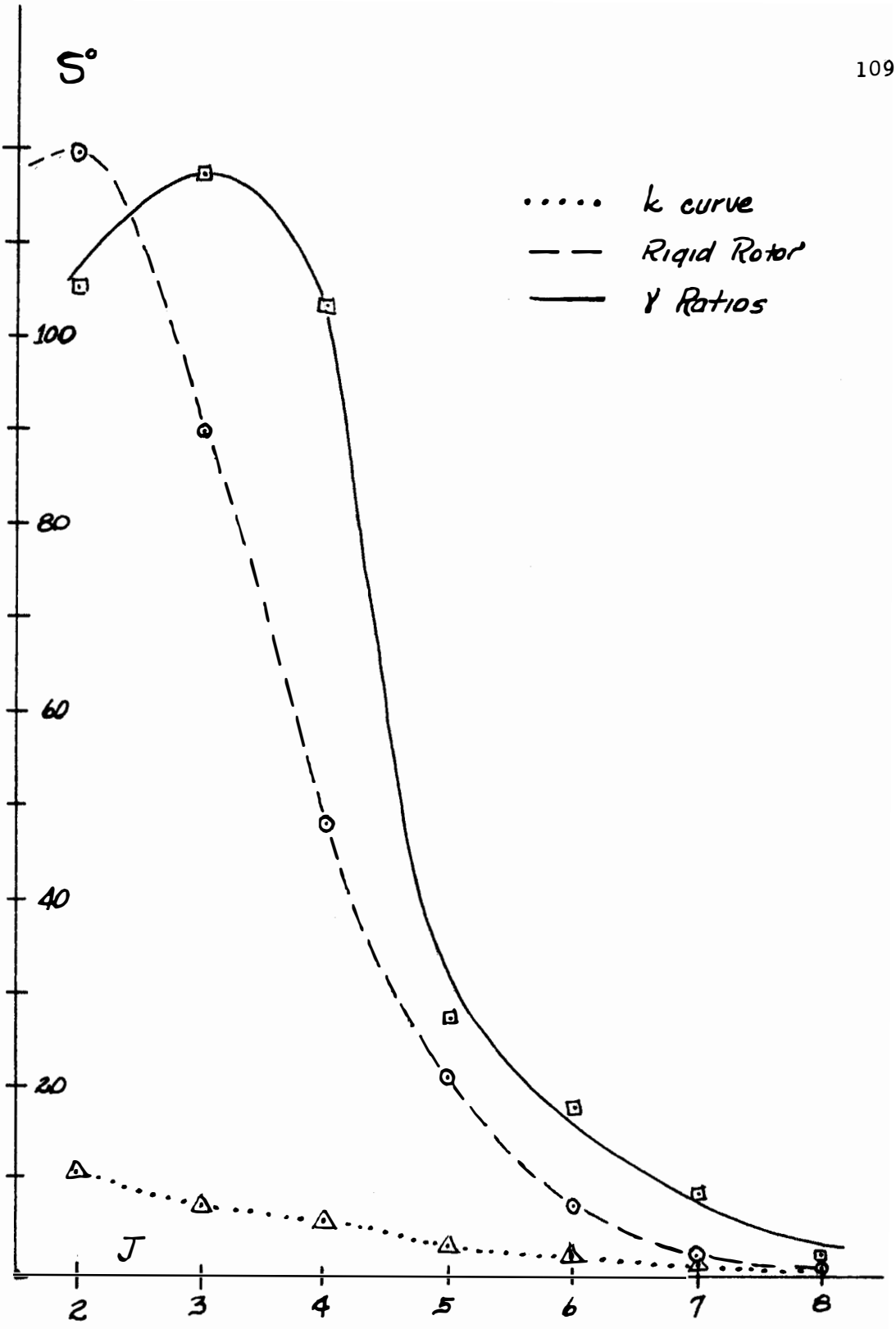

Figure 16. Plots of Line Strength vs. Transitions

believed to have more validity than the line strengths measured directly from the absorption coefficient curve.

CHAPTER VII

SUMMARY AND SUGGESTIONS FOR FUTURE RESEARCH

I. SUMMARY

In many ways the experimental effort described in the preceding chapters was of an exploratory nature. When the work began, it was not known if transmittance measurements could be made across the breadth of an absorption line in the far infrared; certainly there was little realization of the extreme strength of these lines. There was even a question as to the availability of window materials which could resist the attack of the highly corrosive hydrogen fluoride and at the same time be transparent in the far infrared. This work raises several questions that indicate the need for further research. Before discussing them, however, a review of this work will be presented.

1. A spectrometer has been constructed with which to make observations in the far infrared spectral region between 20 μ and 250 μ. This instrument was used in the present research and has proven satisfactory for work requiring resolution no greater than one wave number. With modification the resolution may be improved and the range extended.

2. It has been proven feasible to make transmittance measurements over strong lines in the far infrared with a low resolution spectrometer, and it has been shown that the problems of handling

HF are only slightly more difficult than with the more familiar near infrared techniques.

3. The vacuum wave numbers of the line centers of the first seventeen lines of the pure rotational spectrum of hydrogen fluoride have been measured. These lines map the region between 41.08 cm^{-1} and 658.54 cm^{-1}.

4. A rotational analysis of these seventeen lines has yielded the ground state rotational constants B_o, D_o, and H_o in the agreement with values obtained in the fundamental band.

5. Examination of the five lines J(11) - J(15) for shifts of their line centers with pressure changes revealed no pressure shifts within the range of experimental error for pressures between 15 cm Hg and 120 cm Hg.

6. The equivalent widths for fifteen lines, from J(2) through J(16), were measured at several different pressures.

7. The variation of equivalent width with pressure was measured for 12 lines--J(2) through J(8) and J(11) through J(15). The equivalent width was found to be directly proportional to the pressure over the range of measurement.

8. The line strength, S°, was measured by calculating the area under the absorption coefficient curve for J(14), J(15), and J(16). The values obtained were in agreement with values obtained by measuring the equivalent widths of these lines in the neighborhood of the lower region of the Landenburg-Reiche curve.

9. The half-widths for the lines J(2) through J(8) were determined by assuming them to vary from line to line in the same ratio as do the half widths of the lines in the fundamental band.

10. The line strengths of the lines J(2) through J(8) were determined from the measured equivalent widths and the ratio determined half-widths. These line strengths were in approximate agreement with those predicted by the rigid rotor approximation.

11. Evidence was found to indicate that the intensity distribution curve has its maximum at J(3) rather than at J(2) as predicted by the rigid rotor theory.

II. SUGGESTIONS FOR FUTURE RESEARCH

Because of the exploratory nature of this work, avenues of attack which were not open at the beginning can now be taken and other approaches have been blocked. The measurements of half-widths and intensities are only approximations to the true values and the work can certainly stand reinvestigation--preferably with a higher resolution instrument. An effort needs to be made to determine the validity of the apparent shift of the maximum of the intensity distribution curve from J(2) to J(3). Certainly a wider variety of cell lengths and pressures should be employed. But, this requires initial research for stronger, more rigid, better transmitting window materials which can withstand the rigors of hydrogen fluoride and high temperatures and pressures.

Since it has been established that intensity measurements in the far infrared can be made on a low resolution spectrometer as described here, there are several molecules which lend themselves to such measurements within the range of the present instrument. In particular measurements on DF are indicated.

High pressure measurements on the lines above J(9) might prove very worthwhile in the direct determination of the strengths of these high J transitions. In addition to the self-broadening measurements, there is the whole field of foreign gas broadening to be considered.

In addition to the above investigations of diatomic molecules, observations on the skeletal vibrations of polyatomic molecules can now be undertaken. Long chain molecules of the man-made polymers are of particular interest in this region. Along this same line the long organic molecules associated with proteins and viruses lend themselves to spectral examinations in the far infrared.

The studies of crystals, semiconductors, and many solid state devices offer other possibilities for the use of this instrument.

Improvements to the instrument itself should also be considered. Parts in the interior of the spectrometer need to be cooled. The instrument should be made more air-tight and more effective drying procedures installed. The grating drive should be modified so that the grating can be rotated more slowly and the scale designating its position be read more precisely.

Finally, efforts should be made to improve the calibration available for this region. Standards, which are not so pressure dependent

as the water vapor spectrum, need to be established. Perhaps the addition of an exterior calibrating source might prove effective.

BIBLIOGRAPHY

BIBLIOGRAPHY

Badger, R. M., and C. H. Cartwright, Phys. Rev., 33, 692 (1929).

Barnes, R. B., Rev. Sci. Instr., 5, 237 (1934).

Benedict, W. S., R. Herman, G. E. Moore, and S. Silverman, Canadian J. Phys., 34, 830 (1956).

Bleaney, B., and R. P. Penrose, Proc. Phys. Soc. (London), 60, 548 (1948).

Conn, G. K. T., and D. G. Avery, Infrared Methods (Academic Press, New York, 1960).

Czerny, M., Z. Physik., 16, 321 (1923); Z. Physik., 44, 235 (1927).

Dennison, D. M., Phys. Rev., 31, 503 (1928).

Firestone, F. A., Rev. Sci. Instr., 3, 186 (1932).

Heitler, W., The Quantum Theory of Radiation (2nd Edition, University Press, Oxford, 1944), p. 116.

Herget, W., "The Infrared Spectrum of Hydrogen Fluoride: Line Positions and Line Shapes," Ph.D. Dissertation, Department of Physics, University of Tennessee (1962).

Herndon, J. A., W. E. Deeds, N. M. Gailar, W. F. Herget, R. J. Lovell, and A. H. Nielsen, J. Opt. Soc. Am., 52, 1108 (1962).

Herzberg, G., Molecular Spectra and Molecular Structure. I. Spectra of Diatomic Molecules (2nd Edition: D. Van Nostrand Company, New York, 1950).

Johnson, C. M., and D. M. Slager, Phys. Rev., 87, 677 (1952).

Kostkowski, H. J., and A. M. Bass, J. Opt. Soc. Am., 46, 1060 (1956).

Kuipers, G. A., "The Spectrum of Monomeric Hydrogen Fluoride: Molecular Constants, Line Shapes, Intensities and Breadths," Ph.D. Dissertation, Department of Physics, University of Tennessee (1956).

Landenburg, R., and F. Reiche, Ann. Physik., 42, 181 (1911).

Lord, R. C., and T. K. McCubbin, J. Opt. Soc. Am., 47, 689 (1957).

McCubbin, T. K., and W. Sinton, J. Opt. Soc. Am., 42, 113 (1952).

Moller, K. D., Proc. Symposium on Molecular Structure and Spectroscopy, Ohio State University, Columbus, Ohio (1963) (Abstract).

Palik, E. D., J. Opt. Soc. Am., 50, 1329 (1960).

Plyler, E. K., and N. Acquista, J. Research Natl. Bur. Standards, 56, 149 (1956).

Plyler, E. K., and R. Blaine, J. Research Natl. Bur. Standards, 60, 55 (1958).

Randall, H. M., D. M. Dennison, N. Ginsburg, and L. R. Weber, Phys. Rev., 52, 160 (1937).

Rank, D. H., A. H. Guenther, G. D. Saksena, J. N. Shearer, and T. A. Wiggins, J. Opt. Soc. Am., 47, 686 (1957).

Rao, K. N., W. W. Brinn, V. L. Sinnett, and R. H. Wilson, J. Opt. Soc. Am., 52, 862 (1962).

Rayleigh, Lord, Proc. of the Royal Inst., XVI, 563 (1901).

Reeder, C., Thermocouples and Thermopiles (Bulletin) (1963).

Robinson, D. W., J. Opt. Soc. Am., 49, 966 (1959).

Rossman, K., K. N. Rao, and H. H. Nielsen, J. Chem. Phys., 24, 103 (1956).

Rubens, H., and E. F. Nichols, Phy. Rev., 5, 98 (1897).

Smith, D. F., and A. H. Nielsen, J. Chem. Phys., 25, 275 (1956).

Strong, J., Phys. Rev., 37, 1565 (1931); Procedures in Experimental Physics (Prentice-Hall, Inc., New York, 1947); J. Opt. Soc. Am., 39, 320 (1949).

White, J. U., J. Opt. Soc. Am., 37, 713 (1947).

Yaroslavskii, N. G., and A. R. Stanevich, Optika I Spektroskopiya, 5 (4), 384 (1958).

Young, R., "A Determination of the Line Parameters for the Pure Rotational Lines J(7) and J(8) of Hydrogen Fluoride," M. S. Thesis, Department of Physics, University of Tennessee (1963).

APPENDIX

TABLE XII

SPECTRAL LINE IN TERMS OF PER CENT ABSORPTION AND k
Transition: J(2) Line Center: 123.15 cm^{-1}
Freq. Interval: 0.1110 cm^{-1} per unit
Pressure: 3.0 cm Hg

Per Cent Absorption	k	Per Cent Absorption	k
•12	•000	94•96	•308
•11	•000	94•95	•307
•36	•000	94•93	•307
•35	•000	93•72	•285
•61	•000	91•30	•251
•87	•000	88•27	•221
1•13	•001	83•70	•187
1•93	•002	77•60	•154
2•47	•002	69•03	•120
3•28	•003	60•09	•094
4•10	•004	51•10	•073
4•93	•005	42•67	•057
6•03	•006	36•33	•046
7•14	•007	31•81	•039
8•25	•008	27•25	•032
9•93	•010	23•91	•028
9•23	•009	21•48	•024
11•62	•012	19•04	•021
13•60	•015	17•20	•019
15•87	•017	15•99	•017
17•87	•020	14•13	•015
20•45	•023	13•53	•014
23•89	•028	12•29	•013
27•64	•033	11•36	•012
31•69	•039	10•10	•010
36•34	•046	8•83	•009
42•73	•057	7•88	•008
50•31	•072	6•92	•007
57•65	•088	5•31	•005
64•46	•106	4•01	•004
71•02	•127	3•03	•003
74•71	•141	2•04	•002
81•63	•174	1•37	•001
86•25	•204	•70	•000
89•43	•231	•36	•000
92•05	•261	•31	•000
94•09	•291	•00	•000

TABLE XIII

SPECTRAL LINE IN TERMS OF PER CENT ABSORPTION AND k
Transition: J(3) Line Center: 164.00 cm^{-1}
Freq. Interval: 0.2122 cm^{-1} per unit
Pressure: 3.0 cm Hg

Per Cent Absorption	k	Per Cent Absorption	k
.16	.000	76.31	.148
.32	.000	78.95	.160
.31	.000	78.95	.160
.47	.000	75.80	.146
.28	.000	70.89	.127
.26	.000	64.06	.105
.07	.000	56.36	.085
.29	.000	65.30	.109
.48	.000	56.37	.085
.85	.000	32.38	.040
1.22	.001	27.31	.032
1.58	.001	22.42	.026
2.13	.002	18.40	.020
2.49	.002	14.39	.016
3.21	.003	11.78	.012
3.76	.003	9.69	.010
4.47	.004	8.13	.008
5.19	.005	7.09	.007
6.09	.006	6.23	.006
6.63	.007	5.55	.005
7.87	.008	5.04	.005
8.94	.009	4.53	.004
10.19	.011	4.02	.004
12.14	.013	3.68	.003
14.43	.016	3.00	.003
17.43	.019	2.49	.002
21.49	.024	1.98	.002
26.24	.031	1.65	.001
32.57	.040	1.14	.001
39.43	.051	.81	.000
46.81	.065	.47	.000
56.12	.084	.14	.000
64.90	.108	.01	.000
71.22	.128	.00	.000

TABLE XIV

SPECTRAL LINE IN TERMS OF PER CENT ABSORPTION AND k
Transition: J(4) Line Center: 204.62 cm^{-1}
Freq. Interval: 0.07614 cm^{-1} per unit
Pressure: 3.0 cm Hg

Per Cent Absorption	k	Per Cent Absorption	k
1.11	.001	89.52	.232
1.34	.001	91.15	.250
1.57	.001	92.23	.263
2.05	.002	92.77	.270
2.53	.002	92.74	.270
3.01	.003	92.72	.270
3.50	.003	91.02	.248
3.98	.004	89.30	.230
4.73	.004	86.44	.206
5.47	.005	82.15	.177
5.97	.006	77.84	.155
6.72	.007	72.07	.131
7.23	.007	66.55	.112
7.73	.008	61.57	.098
8.24	.008	55.70	.083
9.01	.009	50.65	.072
9.53	.010	45.86	.063
10.30	.011	40.47	.053
10.57	.011	35.32	.044
11.35	.012	31.61	.039
12.14	.013	27.87	.033
13.19	.014	25.58	.030
14.52	.016	22.69	.026
15.32	.017	20.37	.023
17.44	.019	18.33	.020
19.31	.022	16.57	.018
21.20	.024	14.80	.016
23.62	.027	13.63	.015
27.65	.033	12.14	.013
31.98	.039	10.34	.011
36.86	.047	8.83	.009
41.78	.055	7.62	.008
48.06	.067	6.70	.007
54.66	.081	5.47	.005
61.56	.098	4.85	.005
67.96	.117	4.53	.004
74.13	.139	3.90	.004
79.51	.163	3.26	.003
83.01	.182	2.63	.002
87.36	.213		

TABLE XV

SPECTRAL LINE IN TERMS OF PER CENT ABSORPTION AND k
Transition: J(5) Line Center: 244.93 cm^{-1}
Freq. Interval: 0.0596 cm^{-1} per unit
Pressure: 5.0 cm Hg

Per Cent Absorption	k	Per Cent Absorption	k
.00	.000	70.49	.125
.02	.000	71.01	.127
.04	.000	71.85	.130
.06	.000	71.76	.130
.47	.000	71.66	.130
.72	.000	71.57	.129
.98	.001	71.47	.129
1.52	.001	71.05	.127
2.63	.002	70.32	.125
3.46	.003	69.57	.122
4.58	.004	67.86	.117
5.70	.006	65.82	.110
6.84	.007	63.43	.103
8.26	.008	59.73	.093
9.12	.009	55.68	.083
10.27	.011	51.93	.075
11.72	.012	47.49	.066
13.76	.015	44.01	.059
16.09	.018	41.17	.054
18.44	.021	37.98	.049
21.10	.024	34.76	.044
23.77	.028	31.18	.038
26.46	.031	27.92	.033
30.05	.036	24.29	.028
33.95	.042	20.98	.024
37.29	.048	17.64	.020
40.36	.053	14.62	.016
43.14	.058	11.91	.013
46.24	.064	9.88	.010
49.96	.071	8.17	.008
52.51	.076	6.10	.006
55.37	.083	4.71	.004
57.95	.089	3.66	.003
59.93	.094	2.60	.002
61.93	.099	1.88	.001
63.95	.105	1.16	.001
65.36	.109	1.13	.001
67.09	.114	.76	.000
68.52	.119	.38	.000
69.66	.123	.00	.000

TABLE XVI

SPECTRAL LINE IN TERMS OF PER CENT ABSORPTION AND k
Transition: J(6) Line Center: 285.00 cm^{-1}
Freq. Interval: 0.0864 cm^{-1} per unit
Pressure: 10.0 cm Hg

Per Cent Absorption	k	Per Cent Absorption	k
3.12	.003	77.49	.153
3.33	.003	78.18	.157
3.55	.003	76.85	.150
3.52	.003	71.94	.131
4.21	.004	65.20	.108
4.19	.004	57.41	.088
4.40	.004	49.05	.069
4.62	.004	39.87	.052
5.32	.005	32.96	.041
5.54	.005	25.49	.030
5.76	.006	20.59	.023
6.70	.007	16.70	.018
7.41	.007	14.09	.015
8.12	.008	12.00	.013
8.84	.009	10.16	.011
9.31	.010	9.09	.009
10.04	.010	8.29	.008
10.76	.011	7.48	.008
11.49	.012	6.94	.007
12.47	.013	6.39	.006
13.70	.015	6.10	.006
15.19	.016	5.82	.006
17.92	.020	5.80	.006
22.65	.026	5.78	.006
30.38	.037	5.49	.005
39.16	.051	5.47	.005
50.49	.072	5.45	.005
60.88	.096	5.16	.005
68.82	.120	5.14	.005
74.53	.141	4.84	.005

TABLE XVII

SPECTRAL LINE IN TERMS OF PER CENT ABSORPTION AND k
Transition: J(7) Line Center: 324.65 cm^{-1}
Freq. Interval: 0.1207 cm^{-1} per unit
Pressure: 10.0 cm Hg

Per Cent Absorption	k	Per Cent Absorption	k
.00	.000	58.21	.090
.00	.000	48.90	.069
.19	.000	39.38	.051
.81	.000	30.48	.037
1.63	.001	23.65	.027
2.45	.002	18.27	.020
3.48	.003	13.92	.015
5.13	.005	9.57	.010
7.60	.008	6.88	.007
11.11	.012	5.63	.005
14.62	.016	4.38	.004
17.72	.020	3.14	.003
22.05	.025	2.30	.002
27.22	.032	1.47	.001
32.80	.041	.84	.000
41.27	.054	.42	.000
48.09	.067	.21	.000
56.98	.087	.21	.000
66.49	.112	.00	.000
68.77	.120		
68.76	.120		
65.87	.110		

TABLE XVIII

SPECTRAL LINE IN TERMS OF PER CENT ABSORPTION AND k
Transition: J(8) Line Center: 363.93 cm^{-1}
Freq. Interval: 0.1575 cm^{-1} per unit
Pressure: 15.0 cm Hg

Per Cent Absorption	k	Per Cent Absorption	k
.00	.000	36.86	.047
.07	.000	26.77	.032
.34	.000	18.57	.021
.61	.000	13.94	.015
1.06	.001	11.20	.012
1.52	.001	8.83	.009
1.97	.002	7.22	.007
2.81	.002	6.16	.006
3.83	.004	5.11	.005
5.43	.005	4.62	.004
7.02	.007	3.95	.004
9.17	.009	3.09	.003
11.89	.013	2.42	.002
14.99	.016	1.93	.002
23.00	.026	1.45	.001
12.28	.013	1.15	.001
41.44	.055	.85	.000
52.24	.076	.55	.000
63.03	.102	.44	.000
65.51	.109	.33	.000
65.34	.109	.22	.000
58.22	.090	.11	.000
47.34	.066	.00	.000

TABLE XIX

SPECTRAL LINE IN TERMS OF PER CENT ABSORPTION AND k
Transition: J(10) Line Center: 441.13 cm^{-1}
Freq. Interval: 0.0252 cm^{-1} per unit
Pressure: 15.0 cm Hg

Per Cent Absorption	k	Per Cent Absorption	k
.00	.000	86.43	.206
.04	.000	84.73	.193
.09	.000	84.72	.193
1.52	.001	84.71	.193
3.15	.003	83.01	.182
4.77	.005	81.30	.172
6.40	.006	79.59	.163
8.03	.008	77.88	.155
9.66	.010	76.17	.147
11.29	.012	72.75	.134
14.60	.016	71.03	.127
19.59	.022	67.61	.116
26.25	.031	62.48	.101
31.25	.038	59.05	.092
34.57	.043	53.91	.079
39.58	.051	50.47	.072
44.58	.060	47.03	.065
49.60	.070	41.88	.055
52.94	.077	38.43	.050
56.28	.085	34.98	.044
59.62	.093	31.52	.039
62.97	.102	26.35	.031
64.63	.107	22.89	.026
67.99	.117	19.42	.022
71.34	.128	15.96	.017
74.70	.141	14.20	.015
76.38	.148	12.44	.013
78.05	.156	8.97	.009
79.73	.164	7.20	.007
81.41	.173	5.44	.005
83.09	.183	5.39	.005
84.78	.194	3.63	.003
86.46	.206	3.58	.003
86.45	.206	1.81	.001
88.14	.219	.04	.000
88.14	.219	.00	.000
88.13	.219		

TABLE XX

SPECTRAL LINE IN TERMS OF PER CENT ABSORPTION AND k
Transition: J(11) Line Center: 478.94 cm^{-1}
Freq. Interval: 0.0303 cm^{-1} per unit
Pressure: 62.0 cm Hg

Per Cent Absorption	k	Per Cent Absorption	k
.59	.000	90.54	.133
.25	.000	90.50	.133
.09	.000	90.47	.133
2.84	.001	90.43	.132
5.81	.003	90.39	.132
10.45	.006	90.35	.132
11.80	.007	88.37	.121
14.83	.009	86.38	.112
17.88	.011	84.37	.105
22.63	.014	82.34	.098
24.04	.015	80.30	.092
28.85	.019	80.22	.091
32.00	.021	78.15	.086
35.16	.024	76.06	.081
38.35	.027	73.96	.076
41.56	.030	71.84	.071
44.80	.033	69.70	.067
46.33	.035	67.54	.063
49.61	.038	67.40	.063
51.16	.040	65.21	.059
56.23	.046	63.00	.056
57.83	.048	60.78	.053
59.43	.051	58.53	.049
62.82	.056	56.27	.046
64.46	.058	56.07	.046
67.89	.064	53.78	.043
67.77	.064	49.35	.038
69.45	.067	42.76	.031
72.94	.074	38.25	.027
74.64	.077	31.55	.021
76.36	.081	24.79	.016
79.92	.090	22.29	.014
83.51	.102	19.77	.012
85.28	.108	17.22	.010
87.07	.115	14.65	.008
90.73	.134	12.05	.007
90.69	.134	9.43	.005
90.65	.134	6.78	.003
90.62	.134	4.11	.002
90.58	.133	3.66	.002

TABLE XXI

SPECTRAL LINE IN TERMS OF PER CENT ABSORPTION AND k
Transition: J(12) Line Center: 516.20 cm^{-1}
Freq. Interval: 0.3532 cm^{-1} per unit
Pressure: 62.0 cm Hg

Per Cent Absorption	k	Per Cent Absorption	k
.00	.000	80.72	.093
.76	.000	81.75	.096
1.53	.000	82.78	.099
2.30	.001	83.81	.103
3.07	.001	83.77	.103
3.85	.002	83.73	.102
4.63	.002	82.60	.099
6.42	.003	81.47	.095
7.21	.004	78.15	.086
8.00	.004	75.90	.080
9.82	.005	72.55	.073
11.64	.007	70.27	.068
13.46	.008	65.78	.060
18.36	.011	62.38	.055
20.22	.012	57.85	.048
23.10	.014	54.40	.044
27.03	.017	49.82	.039
28.92	.019	47.46	.036
31.85	.021	42.84	.031
34.79	.024	39.32	.028
37.74	.026	35.78	.025
41.76	.030	31.10	.021
46.83	.035	28.65	.019
49.83	.039	26.20	.017
53.90	.043	22.59	.014
56.94	.047	18.96	.011
60.00	.051	17.60	.010
63.06	.056	13.94	.008
67.20	.063	12.56	.007
70.31	.068	8.87	.005
73.42	.075	5.16	.003
75.49	.079	3.74	.002
77.56	.084	.00	.000

TABLE XXII

SPECTRAL LINE IN TERMS OF PER CENT ABSORPTION AND k
Transition: J(13) Line Center: 552.85 cm^{-1}
Freq. Interval: 0.0414 cm^{-1} per unit
Pressure: 62.0 cm Hg

Per Cent Absorption	k	Per Cent Absorption	k
.00	.000	69.12	.066
.12	.000	65.74	.060
.57	.000	61.52	.054
1.26	.000	57.28	.048
1.96	.001	52.20	.041
5.93	.003	47.10	.036
7.45	.004	41.15	.030
10.61	.006	35.18	.024
14.61	.008	27.51	.018
17.79	.011	19.83	.012
22.63	.014	15.50	.009
28.30	.018	12.01	.007
33.99	.023	9.36	.005
37.21	.026	6.70	.003
42.92	.031	4.03	.002
49.48	.038	3.06	.001
55.22	.045	2.08	.001
60.14	.052	1.96	.001
62.59	.055	.98	.000
65.87	.060	.00	.000
68.33	.065		

TABLE XXIII

SPECTRAL LINE IN TERMS OF PER CENT ABSORPTION AND k
Transition: J(14) Line Center: 588.82 cm^{-1}
Freq. Interval: 0.0474 cm^{-1} per unit
Pressure: 62.0 cm Hg

Per Cent Absorption	k	Per Cent Absorption	k
.00	.000	37.24	.026
.11	.000	32.27	.022
.55	.000	27.28	.018
2.82	.001	23.10	.014
4.30	.002	18.91	.011
6.58	.003	15.53	.009
10.47	.006	12.97	.007
15.16	.009	10.39	.006
19.07	.011	7.81	.004
22.98	.014	6.88	.004
27.71	.018	5.94	.003
31.64	.021	4.99	.002
36.39	.025	4.05	.002
41.95	.030	2.27	.001
45.92	.034	1.32	.000
48.28	.037	.37	.000
51.45	.040	.24	.000
53.01	.042	.12	.000
52.14	.041	.00	.000
48.84	.037		
45.52	.034		
41.39	.030		

TABLE XXIV

SPECTRAL LINE IN TERMS OF PER CENT ABSORPTION AND k
Transition: J(15) Line Center: 624.07 cm^{-1}
Freq. Interval: 0.0358 cm^{-1} per unit
Pressure: 62.0 cm Hg

Per Cent Absorption	k	Per Cent Absorption	k
.00	.000	16.15	.009
.58	.000	12.46	.007
2.39	.001	8.77	.005
2.98	.001	6.30	.003
4.19	.002	3.22	.001
6.00	.003	2.59	.001
8.42	.004	1.96	.001
12.07	.007	1.32	.000
15.10	.009	.69	.000
18.75	.011	.67	.000
21.79	.013	.65	.000
23.60	.015	.63	.000
26.03	.017	.00	.000
26.63	.017		
27.23	.018		
25.38	.016		
22.92	.014		
19.23	.012		

TABLE XXV

SPECTRAL LINE IN TERMS OF PER CENT ABSORPTION AND k
Transition: J(16) Line Center: 658.54 cm^{-1}
Freq. Interval: 0.0601 cm^{-1} per unit
Pressure: 62.0 cm Hg

Per Cent Absorption	k	Per Cent Absorption	k
.00	.000	13.41	.008
.47	.000	13.36	.008
.94	.000	13.31	.008
1.41	.000	12.21	.007
1.88	.001	11.11	.006
3.41	.001	10.00	.005
4.41	.002	8.89	.005
5.41	.003	7.26	.004
6.41	.003	5.62	.003
7.41	.004	4.50	.002
7.89	.004	3.39	.001
8.89	.005	2.28	.001
9.90	.005	1.16	.000
10.38	.006	.58	.000
11.39	.006	.00	.000
12.40	.007		