To the Graduate Council:

I am submitting herewith a dissertation written by Daniel Slade Bagley, III, entitled "Structured Fantasy as a Stimulus for Enhancing Short-Range Creative Problem-Solving Performance in Adults." I recommend that it be accepted in partial fulfillment of the requirements for the degree of Doctor of Philosophy, with a major in Communications.

Jack B. Haskins, Major Professor

We have read this dissertation
and recommend its acceptance:

Sherilyn K. Zeigler

Donald G. Hulsman

Robert Howard

Accepted for the Council:

L. Evans Roth
Vice Chancellor
Graduate Studies and Research

STRUCTURED FANTASY AS A STIMULUS FOR ENHANCING SHORT-RANGE CREATIVE PROBLEM-SOLVING PERFORMANCE IN ADULTS

A Dissertation

Presented for the

Doctor of Philosophy

Degree

The University of Tennessee, Knoxville

Daniel Slade Bagley III

August 1977

1302509

DEDICATION

To Ann, the other half of the team.

ACKNOWLEDGMENTS

First I would like to express my thanks and appreciation to the members of my committee: Dr. Jack B. Haskins, Dr. Donald G. Hileman, Dr. Robert Howard, and Dr. Sherilyn K. Zeigler. Their open-mindedness and emphasis on the importance of interdisciplinary communications studies made this study possible. Committee Chairman, Dr. Haskins, was particularly helpful with cogent analyses combined with supportive encouragement both in this study and throughout my course work.

Another mentor, friend, and colleague I'd like to specially thank is Professor Richard Joel, the professor most responsible for my academic direction and evolution.

Thanks should also go to Dr. Robert DeRycke for his strong support in providing time and inspiration toward the development and execution of the structured fantasy used in this study.

Of course a study such as this cannot be performed without volunteer subjects. To them as well as my test scorer, Ms. Donna Creech, I extend my sincere thanks. Appreciation is due to Mr. John Boling who provided time and valuable advice concerning this study's computer programming. Thanks are also extended to Ms. Margaret Cook for her final typing and format editing of this paper as well as her overall good-natured support.

Finally, I am extremely grateful to the members of my family who have given support, encouragement, time and love throughout the entire course of my doctoral program. It is from them--particularly my wife, Ann, and parents, Dan S. and Helen Hylton Bagley, that I have drawn the greatest amount of energy, inspiration, and faith.

ABSTRACT

The purpose of this research was to investigate the possibilities of using structured fantasy to enhance short-range creativity.

A treatment and experiment were designed based on related literature and experience gained in pilot studies conducted in creative teaching workshops at The University of Tennessee. The experimental subjects were 27 volunteer members of a University of Tennessee College of Communications Public Relations class. They were pretested with the first five activities of the Torrance Tests of Creative Thinking, Verbal Form A on a Friday morning. On the following Monday morning they were divided into experimental and control groups through stratified randomization based on their pretest fluency scores.

The experimental subjects were given a structured fantasy using autogenic suggestion techniques presented in a metaphoric mode to relax them. In this state of supposed receptiveness it was suggested that they consider a number of personality traits which they had, but which may not have been considered lately. The traits called to their attention were affective in nature and commonly found in creative individuals. Meanwhile, the control subjects were relaxing in another area.

Immediately following the ten-minute treatment period the first five activities of the Torrance Tests of Creative Thinking, Verbal Form B were administered as the posttest. Differences between the pretest and posttest for individuals were analyzed using the nonparametric Mann-Whitney U statistical approach.

It had been hypothesized that a structured fantasy used to enhance

relaxation and positive, relevant, creative role assumption, presented in a metaphoric mode (to minimize defenses) would result in increased creative problem-solving performance as measured by the first five activities of the Torrance Tests of Creative Thinking, Verbal Forms A and B. The data obtained through the experiment supported this hypothesis.

It had been further hypothesized that fluency, flexibility, and originality would all be enhanced by the treatment. It was found that overall fluency and originality scores of the experimentals increased significantly more than the controls, but there was no such gain in flexibility.

Finally, it had been hypothesized that increased creativity in the experimental subjects would not vary significantly with tasks. This was not supported by the data.

It was concluded that structured fantasy is one viable mode for enhancing short-range creative problem-solving performance.

TABLE OF CONTENTS

CHAPTER		PAGE
I.	INTRODUCTION.	1
	Statement of the Problem Need for the Study Limitations of the Study Assumptions Definition of Terms Organization of the Study	
II.	REVIEW OF RELATED LITERATURE.	9
	Creative Personality Characteristics A Metaphoric Approach to Creative Problem Solving The Affect as Gatekeeper Constructs of Perception Freudian Approaches Guilford's Models Physiognomic Perception Synectics Role Playing and Altered States of Consciousness Fantasy A Recapitulation The Torrance Tests' Reliability and Validity	
III.	PROCEDURES.	40
	Development of Treatment Procedure Subjects Apparatus Procedure	
IV.	ANALYSIS OF DATA.	48
	Interscorer Reliability Means, Standard Deviations and Norms Statistical Treatment Composite Scores Comparison Total Fluency, Flexibility, and Originality Changes Changes Between Activities Changes Within Activities	
V.	SUMMARY	65
	Conclusions Implications	

CHAPTER PAGE

V. (Continued)

Recommendations for Future Research
A Parting Caveat

REFERENCES 70

APPENDIX. 79

VITA 102

LIST OF TABLES

TABLE		PAGE
1.	Summary of Short-Range (One Week to Nine Months) Predictive Validity Studies of the Torrance Tests of Creative Thinking	38
2.	Summary of Long-Range Predictive Validity Studies of the Torrance Tests of Creative Thinking	39
3.	Fluency, Flexibility and Originality Means and Standard Deviations for Pretest, Posttest and Amount of Individual Change.	49
4.	Activity Means and Standard Deviations for Pretest, Posttest and Amount of Individual Change	50
5.	Mann-Whitney U Comparison of Composite Fluency, Flexibility, and Originality Pretest-Posttest Score Changes Between Groups	53
6.	Mann-Whitney U Comparison of Total Pretest-Posttest Score Changes.	54
7.	Mann-Whitney U Comparison of Total Pretest-Posttest Score Changes in Activities 1 Through 5.	56
8.	Mann-Whitney U Comparison of Activity 1 Pretest-Posttest Score Changes	58
9.	Mann-Whitney U Comparison of Activity 2 Pretest-Posttest Score Changes	59
10.	Mann-Whitney U Comparison of Activity 3 Pretest-Posttest Score Changes	60
11.	Mann-Whitney U Comparison of Activity 4 Pretest-Posttest Score Changes	61
12.	Mann-Whitney U Comparison of Activity 5 Pretest-Posttest Score Changes	63

LIST OF FIGURES

FIGURE		PAGE
1.	Application of Gatekeeper Concept to Freud's Three Strata of the Human Mind.	17
2.	Guilford's Problem-Solving Process Model.	21
3.	Theoretical Model for the Complete Structure-of-Intellect . .	23
4.	Experimental Design	42
5.	A Graphed Comparison of the U Statistics for the First Five Torrance Activities.	64

CHAPTER I

INTRODUCTION

The study of creativity is made difficult by the conflicting constructs offered by researchers as being the core or essence of creativity. It therefore becomes necessary, when studying the possibilities of measuring and manipulating creative behavior, to establish conceptual frameworks within which to work. To this end one must focus upon that part of the universe which appears manageable, and eschew the sibylline lure of the esoteric and unobservable in deference to the more scientific and pragmatically observable.

Additionally complicating the study of creativity is its broad interdisciplinary base. Just as there are many points of view concerning the nature of creativity, there are many disciplines which shed direct and metaphorical light on the nature and nurture of creativity. For this reason, this study has ventured into a number of different (but metaphorically related) disciplines in search of new insights into the enhancement of creativity.

Statement of the Problem

The purpose of the present study was to investigate the enhancement of verbal creative problem-solving performance in adults through structured fantasy. It was hypothesized that a structured fantasy to enhance relaxation and positive, relevant, creative role assumption, presented in a metaphoric mode (to minimize habitual defenses) would result in increased creative problem-solving performance as measured by the first

five activities of the Torrance Tests of Creative Thinking, Verbal Forms A and B. To this end a number of theories and studies were brought together to give this investigation direction.

Subsumed in the basic purpose of this study were the questions of whether fluency, flexibility, and originality would all be enhanced by the treatment, and would the results vary according to tasks. Here the hypotheses were that fluency, flexibility, and originality would all be enhanced by the treatment, and that this enhancement would not vary significantly by activity.

The experiment concerned itself only with short-term creativity, measuring performance for only the 40-minute period immediately following the treatment.

Need for the Study

The practical and theoretical applications of this study are many. In this writer's field of communications (specifically focusing on advertising and public relations) nearly all professionals are called upon from time to time to function creatively. Obviously, many other areas likewise have creative demands.

While it is well recognized that creativity is woven from cognitive and affective fiber, how to optimally strengthen these fibers is unknown.

This writer believes that a short treatment designed to stimulate individuals' affect to the point of increased short-term creative problem-solving output could be of benefit to the business world as well as to numerous other areas and disciplines. For example, such a treatment could be used as a preparation for creatively arduous tasks.

The treatment used in this study is, therefore, not tailored to specific tasks, but is readily transferable to innumerable problem-solving situations, extending much farther than courses taught in colleges of communications.

Limitations of the Study

A major limitation of this study is that the experiment was confined to a relatively small group (27 students) who were members of a public relations class at The University of Tennessee. Possibilities of regional and course-selection bias certainly exist.

The testing instruments used were the first five activities of the Torrance Tests of Creative Thinking, Verbal Forms A and B (Torrance, 1966). These five activities were: ASKING, GUESSING CAUSES, GUESSING CONSEQUENCES, PRODUCT IMPROVEMENT, AND UNUSUAL USES. While the Torrance tests are well respected and widely used, they suffer a malady common to all tests of creativity. Of this Treffinger, Renzulli, and Feldhusen (1971) observe:

> Given the existing array of ideas about creativity, and the absence of "theoretical unity," it is not in the least surprising that there exists a number of tests, all purporting to be measures of "creativity," but differing in a number of ways. Each instrument mirrors the particular set of beliefs and preconceptions of its developer concerning the nature of creativity. (p. 106)

The validity and reliability of the Torrance tests will be discussed in Chapter II. It should be pointed out here, however, that Torrance's creativity criteria--i.e., fluency, flexibility, and originality--are recognized in Guilford's Structure of Intellect model (Treffinger, et al., 1971; Guilford, 1970).

Assumptions

For the purpose of this study the following assumptions were made:

1. There are certain psychological processes referred to as "creativity" or "creative problem solving" that exist in people's repertoire of behaviors.

2. The first five activities of the Torrance Tests of Creative Thinking, Verbal Forms A and B can be used to effectively measure creative problem-solving behavior.

3. The structured fantasy used as the experimental treatment is representative of what other similarly-based treatments might be like in terms of effecting increases in creative problem-solving behavior.

4. The learning-the-test sensitization of taking the pretest was the same for both experimental and control groups.

5. All subjects operated in good faith, scoring as well as they could on both the pretest and the posttest.

Definition of Terms

Creativity. Creativity is operationally defined as fluency, flexibility, and originality as measured by activities on the Torrance Tests of Creative Thinking Verbal Forms A and B (Torrance, 1966). In reviewing the related literature, however, when other tests and measures are used, the term "creativity" will be operationalized within the cited tests' established conditions. Such exceptions will be noted.

Fluency. Fluency on the Torrance tests is defined as "the total number of relevant responses, relevancy being defined in terms of the

requirements of the tasks as set forth in the instructions" (Torrance, 1974, p. 12). In other words, fluency is simply a count of the number of responses a subject produces which relate to the task given.

Flexibility. Flexibility is operationalized as the number of different response categories used in each Torrance test activity. Within each activity a repeated category is not counted as adding to flexibility. Categories for all activities are outlined in detail in the verbal test instructions of the Torrance Tests of Creative Thinking Directions Manual and Scoring Guide (Torrance, 1974).

Originality. Originality is indicated by uncommon responses. For example, on the Torrance Tests of Creative Thinking an originality score of zero is given to responses produced by 5 percent or more of respondents. A value of one is given to responses coming from 2 to 4.99 percent of Torrance's respondents. A weighted value of two is given to responses which occur from less than 2 percent of respondents (Torrance, 1974). To facilitate scoring by researchers using his tests, Torrance has elaborate lists of responses and their originality weight in his Directions Manual and Scoring Guide (1974). Responses not included are considered novel and are given a weight of two.

Affective gatekeeper. Affective gatekeeper is a metaphor coined to create a heuristic construct for describing how an individual's affect--that broad range of psychological processes which include emotion, moods, feeling, and temperament (Chaplin, 1968)--acts as an intrapersonal restrictor of cognitive information. The term "gatekeeper" is, of course, a communications term generally used to describe people such as editors

whose job it is to decide what information is worth passing on to the public.

The reason for coining this metaphor was to create a construct which could serve as a metaphorical common denominator for tying together a number of paradigms which implicitly or explicitly suggest such a psychological phenomenon. Coining a new term was believed necessary to avoid the theoretical details and connotative extensions of established paradigms.

The term is intended to be a heuristic device and not a description of a functioning organ or mechanical apparatus.

Organization of the Study

The report of this study is organized in five chapters. Chapter I introduces the study with a short comment on investigating creativity, the statement of the problem, the need for the study, the limitations of the study, the assumptions used, definitions of terms, and an overview of the organization of this report.

Chapter II contains a review of the literature related to this study. It begins with a review of the psychological characteristics which are commonly found in creative individuals. These characteristics lay the foundation for the role assumption suggestions used in the structured fantasy. A metaphoric approach to creative problem solving is investigated next, generally in terms of the use of metaphor in psychotherapy. This discussion opens the question of the affect as a psychological gatekeeper. To pursue the possibilities of the affect as gatekeeper several perceptual constructs are discussed including Rokeach's belief levels, Kelly's "personal constructs" and Hastorf and Cantril's classic Princeton-

Dartmouth study. Some Freudian approaches are considered next starting with the simple conscious, preconscious, and unconscious paradigm, and evolving into a brief discussion of how regression in service of the ego relates to creativity. Guilford's problem-solving and Structure of Intellect models are then brought in followed by a discussion of physiognomic perception and its relation to the synectics technique. The use of personal analogy in the synectics process leads logically into a discussion of role assumption and altered states of consciousness as creativity devices. There is a discussion of fantasy and a recapitulation of how all of the diverse areas covered metaphorically relate to each other and to creative problem solving. Chapter II is concluded with a discussion of the Torrance tests' use, reliability, and validity.

Chapter III analyzes the methodology used in the experiment. The development of the treatment procedure is discussed, followed by descriptions of the subjects, apparatus used, and the precise procedural details of the treatment.

Chapter IV contains the analysis of the data obtained in the experiment. Interscorer reliability is cited. This is followed by tables and discussion of what specific areas show statistical significance using the Mann-Whitney U one-tail statistical procedure to analyze the change in individual scores between the pretest and posttest. The analysis starts with cumulative scores for all activities and systematically takes the data to the point that changes in fluency, flexibility, and originality in each activity are compared.

Chapter V summarizes the findings, draws some conclusions, discusses some of the findings' implications, and makes some recommendations

for future research. The chapter ends with a parting caveat about reifying such constructs as those used in this paper.

CHAPTER II

REVIEW OF RELATED LITERATURE

Creative Personality Characteristics

For over a century investigators have pondered the personality characteristics of creative individuals. The last thirty years have by far been the most productive.

Galton (1874) found in his investigation of outstanding scientists that independence of views, energy, good health, steady pursuit of purpose, business habits, and a strong taste for science were common in half of them.

Roe (1946, 1953) used Rorschach, Thematic Apperception Tests (TAT), and biographical material data to research highly creative painters and scientists. She found research scientists to be particularly inclined toward persistence, curiosity, independence, and high energy levels. Willingness to work and strong motivation to succeed were characteristics common to both groups.

MacKinnon (1960, 1961) and his associates at the Institute for Personality Assessment and Research investigated research scientists, architects, writers, and mathematicians. They found independence, inventiveness, enthusiasm, individuality, and industriousness to be highly characteristic of high creatives. Their less creative counterparts were more inclined to stress rationality, good character, virtue, and concern for others. MacKinnon also found these highly creative professionals to be perceptually open, tolerant of tension related to solving problems, aesthetic, theoretical, intuitive and somewhat introverted.

Barron (1953) found highly creative scientists, artists, writers, and architects to have a preference for cognitive complexity. This complexity, he found, extended itself into verbal fluency, impulsiveness, sensuality, aesthetic interest, personal tempo, and sex drive. Barron (1952) also found high creatives to be more modern, primitive, and experiential, while showing disfavor toward those who were traditional, aristocratic, and emotionally controlled.

Maddi (1965) stressed curiosity, novelty seeking, and avoidance of boredom as salient traits of high creatives in his early work, and later focused heavily on the strenuousness involved in creative work.

It should be emphasized that all of the studies cited so far were based on highly successful creative professionals, not focusing on moderately creative individuals and not seeking out highly creative, but unrecognized, artists, scientists, etc.

Guilford (1975) mentions high curiosity, high energy, reflective thinking, great appreciation of humor, risk-taking, high tolerance for ambiguity, individuality, need for recognition, low sociability, high self-sufficiency, strong self-assertiveness, and some occurrence of rejection of conventional standards as characteristics commonly found in creative individuals.

A Metaphoric Approach to Creative Problem Solving

Psychotherapy is a form of problem solving. It is also, therefore, a logical place to start a discussion of the creative problem-solving process. The metaphoric approach to problem solving simply attempts to place the familiar into a new perspective. Novel perspectives, it follows, are the wings on which creative problem solving flies.

Barlow (1973) observes that psychotherapy, like all problem solving, is an open-ended process in which the patient and therapist use metaphoric models as heuristic devices for approaching and understanding otherwise difficult-to-approach problems.

Fine, Pollio, and Simpkinson (1973) believe that metaphoric communication allows subjects to draw upon feelings and impulses which exist out of consciousness.

Lenrow (1966) suggests seven ways metaphors aid psychotherapy:

> First, the use of metaphors . . . provide a model of willingness to try out novel ways of looking at behavior.
> Second, metaphors function to simplify events in terms of a schema, or concept, that emphasizes some properties more than others.
> Third, the concrete referents of metaphorical language give such communications an intimate or personal quality.
> Fourth, metaphors have a half playful, half serious quality that permits the therapist to communicate about intimate characteristics of the client without appearing as intrusive as a more conventional mode of describing the client might appear.
> Fifth, the form of metaphor is especially well-suited for asserting the affective equivalence of apparently dissimilar concepts or events.
> Sixth, to the extent that metaphors refer to interactions between an object and its environment, they are well suited for highlighting subtle social roles that a client takes.
> Seventh, metaphorical concepts, once learned, are likely to transfer readily to new situations that the person enters or old ones he reenters. (pp. 146-147)

Utilizing the Torrance Tests of Creative Thinking, Verbal Test A, a narrative composition task, and an essay, Porter (1973) compared the relationship between high and low divergent thinking with incidents of figurative usage. He found a positive relationship between incidence of figures of speech and originality. He also observed that narrative compositions produced significantly more figures of speech for divergent thinkers than did written essays. This finding led him to conclude that

when using the incidence of figures of speech in assessing creativity, the written narrative is a good tool, while the written essay is not.

Holstein (1972), in a study which used metaphoric techniques to induce creative thinking in fourth graders, concluded that metaphorical language exercises improved innovative speaking and writing. She noted, however, that written language tended to be less empathetic and spontaneous than spoken.

In a similar study, M. Pollio (1971) analyzed the value of the Making It Strange series (Synectics, Inc., 1968) in increasing figurative language in third, fourth, and fifth grade students. The Making It Strange series is a metaphor-developing series of elementary school workbooks. Using a pretest, four weeks of exposure, and a posttest, she found that although metaphoric usage increased in all grades, the increase was only statistically significant for the experimental subjects.

The Porter, Holstein, and M. Pollio studies offer some insights and raise some possibilities for further researching the role of figurative language in the creative process. It appears, for example, that formal writing (the essay for the college students and the written compositions for the children) tends to inhibit figurative language. A reasonable deduction might be that more formally structured situations tend to constrict creative efforts. An extension of the inverse relationship between situational constrictiveness and novel metaphor production can also be viewed from a constrictive personality standpoint. Lockwood's (1974) study, in which he administered the TAT (group) and Rorschach (individual) tests to forty college students, revealed that low metaphorizers tended to be more rigid and constrictive, while high metaphorizers

demonstrated more "cognitive flexibility." Although his findings did not indicate that the high metaphorizers as a group were creative, they did indicate that low metaphorizers (bottom quartile of distribution) tended to lack flexibility and creativity.

His findings are congruous with others' findings that creative subjects tend to be less defensive than noncreative subjects (Barron, 1955; Hersch, 1962; Garwood, 1964; Myden, 1959).

Lockwood's observations are analogous (though not directly related) to Guilford's (1970) explanation of the relationship between IQ and creativity. That is, while low IQ tends to limit creative ability, high IQ does not guarantee it. In other words, an average to high IQ is a necessary condition for high creativity, but is not sufficient to guarantee it.

By considering these findings from a neuropsychological perspective a new possibility appears. Ornstein (1972) discusses the two hemispheres of the brain. The left hemisphere is essentially rational, binary, logical, and linguistic. The right hemisphere tends to be figural, relational, and holistic. The hemispheres are often generalized as cognitive versus affective.

The Affect as Gatekeeper

Although empirically the functions of the brain are presently black box phenomena, one interpretation of the data is that while metaphorical thinking is probably cognitive in nature, it is subject (to use a communications metaphor) to a gatekeeper restriction from the affective domain. The discussion here is not whether brain functions are split physiologically, but whether or not creative blockages are affective

rather than cognitive problems. Should the gatekeeper restriction interpretation be operative it would follow that removing affective blocks would increase creativity.

The affective gatekeeper, one might logically surmize, operates at a precognitive level. It filters inputs as well as outputs. It actually affects the "reality" that is perceived by each individual. There operates, in other words, an I'll-see-it-when-I-believe-it syndrome. This is congruent with what Bruner and Goodman (1947) noted in their study of organizing factors in perception. They observed that subjects could be conditioned to see and hear things in much the same ways as they could be conditioned to perform such physical acts as knee-jerking, eye-blinking or salivating. They concluded this by paring a faint image and a sound many times. Eventually subjects would report seeing the image when only the sound was presented.

Constructs of Perception

Rokeach's (1968) paradigm concerning five levels of beliefs has some analogous applicability here. Rokeach sees people's most primitive, or basic, beliefs--Type A beliefs--as relating to physical reality and self-existence. Examples of Type A beliefs would be, "I believe this is a chair," or "I believe gravity will always work." In descending order, Type B beliefs are also primitive, but have more to do with self-image, e.g., "I believe I am creative," or "I believe I am a fair person." Type C beliefs relate to which authorities people choose to trust and not trust. They are basically authority beliefs based on identification with groups as well as social contact. Some ethnic groups, for example, commonly exhibit distrust of the police or outsiders in general. Type D

beliefs are peripheral and are derived second hand from the authorities with whom we identify, e.g., "I read it in Newsweek so it must be true." Type E beliefs are the least consequential, relating to such things as buyer preference, e.g., "I believe Pontiac is better than Buick."

According to Rokeach, a belief change at any level affects all the beliefs below that level. It also follows that the more primitive or basic, i.e., closer to Type A--beliefs are much more difficult to change than the less consequential ones such as Type E.

Rokeach's paradigm has more face validity than empirical proof. It also might be criticized for its sweeping generalities. But models are caricatures of reality and not reality itself. To better match reality, this writer prefers to remodel the Rokeach paradigm as an inverted cone with no discrete levels, but a continuum with change at any level having a major effect downward, but also a subtle osmotic effect upward as well. This would make it fit more congruently with dissonance theory and Skinnerian behavior modification.

But this difference does not affect the heuristic value Rokeach's theory adds to the affective gatekeeper analogy.

The affective changes proposed would be approximately at the Type B level--encouraging the individual to see himself as a creative entity--and would have some effect on all the other beliefs.

The Rokeach paradigm, thus, through analogy, offers a perspective on possible ramifications involved in the altering of the affective domain.

In 1955 psychotherapist George Kelly hypothesized that we all live in "personal constructs" based on our perceptions of past experiences.

His therapy was based on the assertion that psychological problems were often rooted in faulty constructs. It followed that his therapy concentrated in establishing new constructions which were more applicable to the patient's life.

In their classic study of a Princeton-Dartmouth football game, Hastorf and Cantril (1954) concluded that (perceptually) different games were seen by the spectators on both sides. The spectators' biases dictated what they "saw." Sperry (1951) went so far as to argue that perceptual consciousness is based solely on the individual's predisposed brain output.

Freudian Approaches

Freudian psychology also offers analogous support for the affective gatekeeper idea. Freud described three strata of the human mind--the conscious, the preconscious, and the unconscious (1954). The conscious is an analytical, logical transactor with the objective world of reality. The unconscious is subjective, and only relates to realities of the mind. The preconscious interrelates the conscious and unconscious in an effort to distinguish between things of the external world and things of the mind. Freudian psychology views consciousness as being rooted in the unconscious. By analogy, the gatekeeper function would be performed in the preconscious (Figure 1). The conscious operates not only under the constraints of logic, but also under the societal constraints of social conformity and cultural assumptions. The gatekeeper in the preconscious (to continue the analogy) strives to keep "reality" in balance by filtering out (non-perceiving) as much conflicting input as is needed to preserve or restore a psychologically acceptable level

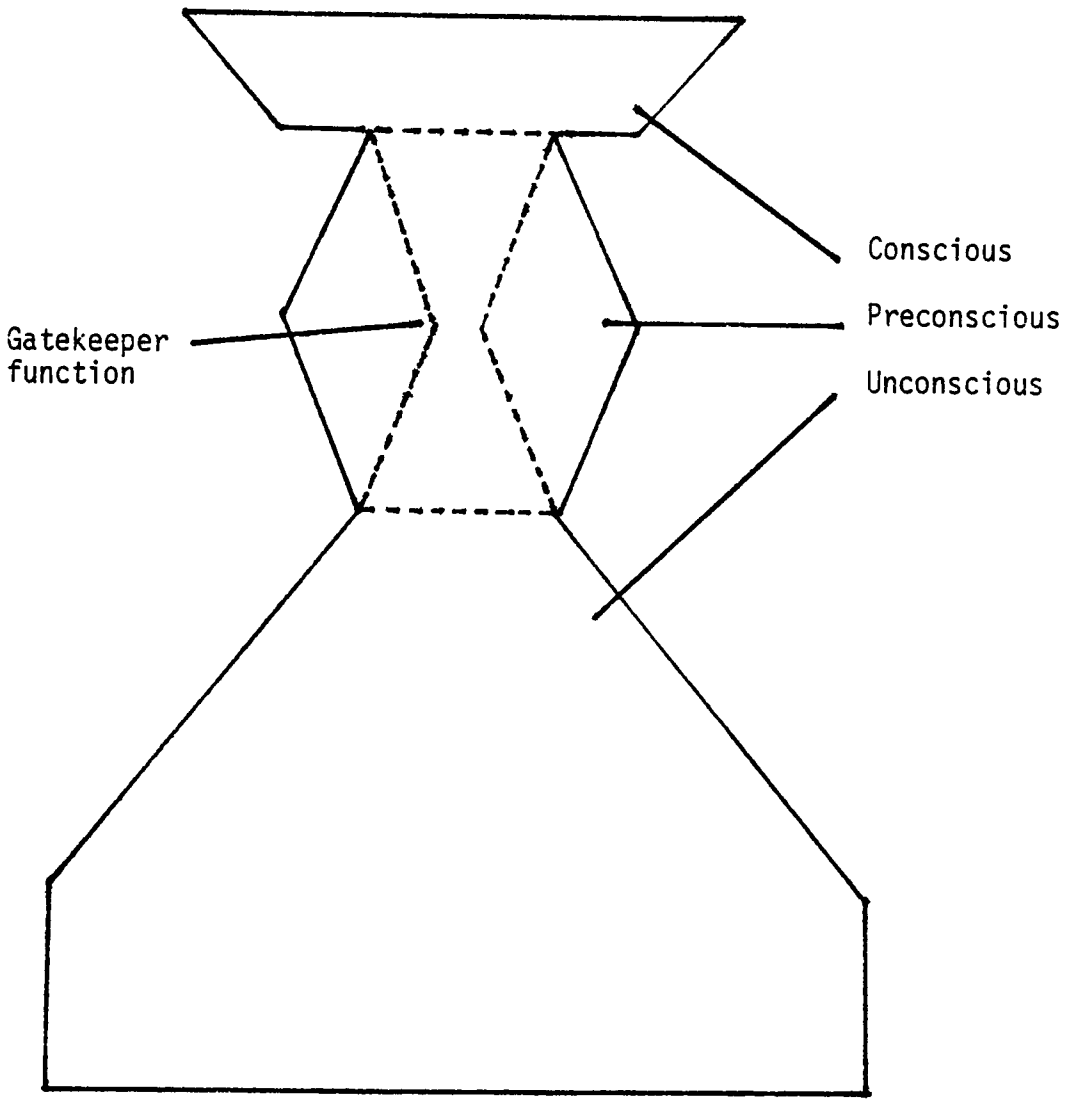

Figure 1. Application of gatekeeper concept to Freud's three strata of the human mind.

of order to the conscious. Metaphorically speaking, creativity requires an opening of the gate to allow more interrelation of the rational, logical elements of the conscious with the irrational, illogical, subjective elements of the unconscious.

Stein (1974) explains it this way:

> The material and data of the unconscious strive for expression. Avenues for such expression are not always readily available because some of that which strives for expression is quite threatening and anxiety provoking to the individual and his conscious mind. Other material that strives for expression also encounters obstructions because it would interfere with the individual's attention to and concentration on stimuli that impinge on him from the environment. If unconscious material spilled out, adjustment would be interfered with. Therefore, energy needs to be devoted to suppressing or repressing unconscious material. When this process continues for a period of time the individual is limited in the resources available to him for creativity. These resources consist both of cognitive and personality data, and because of the transactional relationships between the two a repression of one may result in the repression of the other. Thus, an individual's unconscious mind may contain necessary cognitive access to this because he fears to allow a relaxation of internal controls for fear that anxiety-related material will also come to the fore. (p. 103)

To emphasize the tentative and metaphoric nature of this augument, it should be pointed out that Freud himself did not have such a metaphoric leap in mind. To the contrary, Burchard (1952) reviews the Freudian theory of creativity and points out that Freud and his early followers saw creative artists as highly neurotic, turning away from reality by externalizing their inner conflicts through their art. The reconciliation of this quandry has been achieved by more recent Freudian psychologists through the concept "regression in service of ego" (Hartman, 1964; Kris, 1952; Stein, 1974).

Regression in service of ego is considered creatively constructive compared to what is commonly called "regression." Stein (1974) elaborates:

> Regression refers to a return to behavior patterns that are characteristic of earlier stages of psychological development. The phrase "in service of ego" signifies that that which was returned to, that which was repressed, is now used for progressive adaptation, to further and enhance psychological development. This type of regression is to be differentiated from those instances where "regression" by itself is used to indicate that the person is involved in a retreat from anxiety and the environment with which he cannot cope to an earlier kind of defense and an earlier stage of development. . . . By contrast, when regression in the service of the ego occurs, that which is regressed to is used constructively. Creative adults who so regress may appear "child-like" but not "child-ish." The creative individual regresses knowingly, voluntarily, and without fear so that he can gain a new perspective of his surroundings and his work. He can become more playful and break up the rigid structures and functions that attend upon his adult psychological development and which interfere with his creative process. He then, as a result of his regression, can use his new found perceptions in conjunction with his adult knowledge, perceptions, and discipline to move to more creative results. (pp. 197-198)

Barron (1963) discusses the great amount of ego control an individual must have over his regressive behavior in order to move from his stable, rational, secondary process thinking to his more fluid, unpredictable, primary process thinking. In his explanation of this phenomenon he emphasizes an ego-cognitive concept a little more than others:

> The effectively original person may be characterized above all by an ability to regress very far <u>for the moment</u>, while being able quite rapidly to return to a high degree of rationality, bringing with him the fruits of his regression to primitive and fantastic modes of thought (a variant of the phenomenon termed "regression in the service of the ego" by Lowenstein and Krist). Perhaps when the context is most efficient, or intelligence greatest, the ego realized that it can afford <u>to allow</u> regression--because it can correct itself. A basic confidence in one's ability to discern reality accurately would thus facilitate the use of powers of imagination. (p. 739)

Other psychologists such as Hersch (1962) and Wild (1965) have compared creative individuals and schizophrenics. They have concluded, as Barron, that the creative individuals were able to delve into primary process thinking and return while the schizophrenics typically did not have the ego-strength to move from one process to the other at will.

The analogy of the affective gatekeeper metaphorically fits into the willingness of an individual to open himself up toward primary process thinking. Whether or not creativity actually springs from primary process thinking is less important to the point than the recognition that whatever the mechanism, increased creative problem-solving performance can be achieved through relaxing that which represses primary process thinking enough to loosen the creative abilities which already exist, but are straitjacketed by a preconscious better-safe-than-sorry disposition.

Guilford's Models

Figure 2 uses yet another approach to explain the pheomenon of creativity. It is Guilford's model (1970, p. 164) representing the operations and flow of information in a general instance of problem solving.

The E and S in each of Guilford's INPUT figures stand for environmental and somatic sources of input. In this model the affective gatekeeper would be diagrammed at each somatic source. Guilford (1968) acknowledges that the somatic sources in his model may include both motivational and emotional components, from within the brain as well as from internal receptors.

Filtering, in Guilford's model, refers to attention focusing. Memory storage underlies and potentially affects all the functions including filtering and each step's evaluation. (The memory categories in the model are segregated solely for illustrative purposes.) Exit I represents dodging the problem. Exit II represents the possibility of giving up. Exit III and those beyond represent problem solution possibilities. Through continually introducing new imputs (including reinterpretations

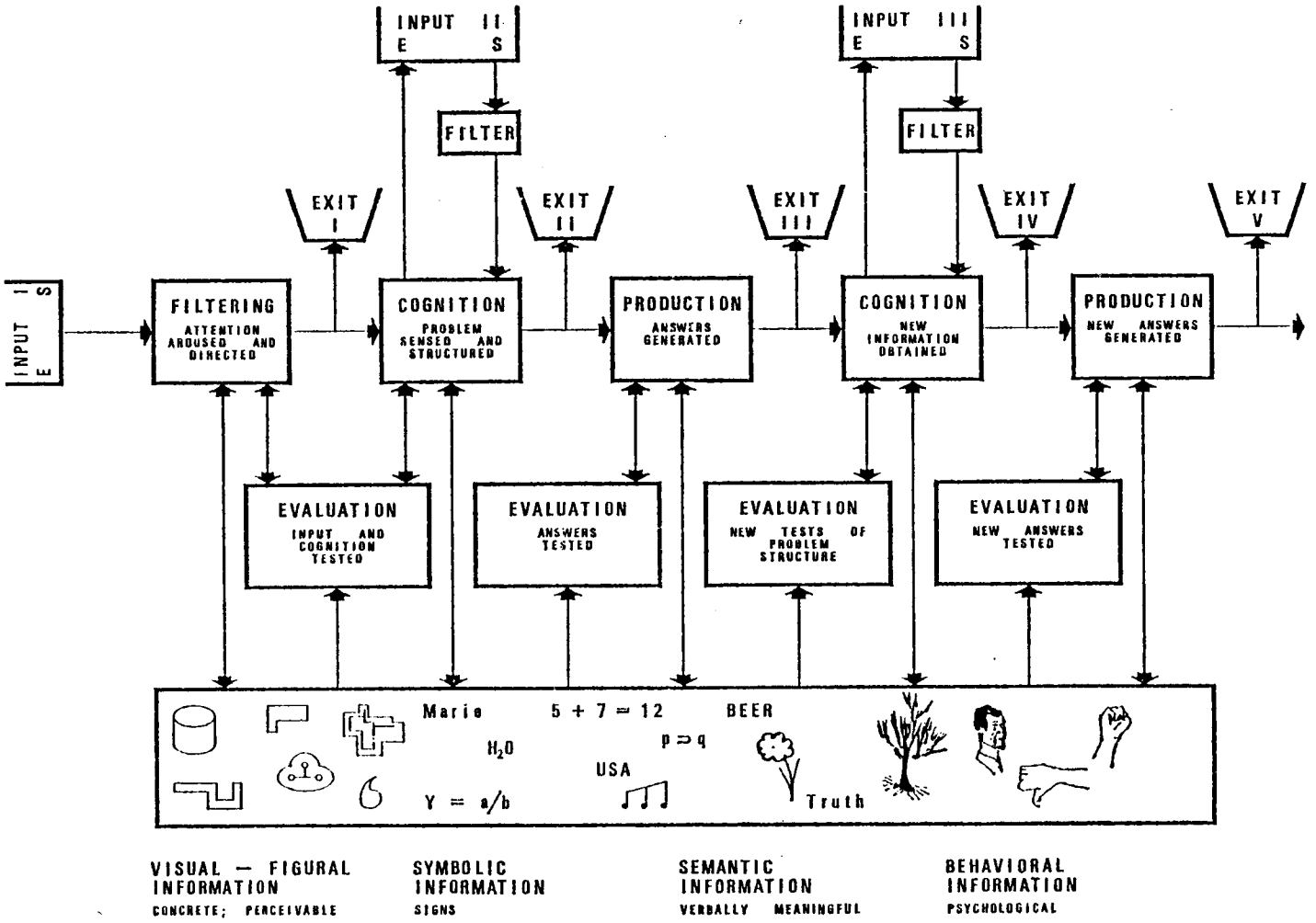

Figure 2. Guilford's problem-solving process model.

and/or new data) the cycle could extend indefinitely.

Guilford's (1970) famous Structure-of-Intellect model is shown in Figure 3. This model is included to show how Guilford theorizes essentially 120 components of the intellect. The reader will note he identifies five major groups of abilities. First, cognitive abilities are used for discovering and rediscovering items of information. Second, the mind is able to direct information to memory storage. Third, divergent production is the generation of information and possibilities from present information while the fourth activity is basically opposite, narrowing or converging on one point from many. Fifth, evaluation is the activity that allows comparison of information with logical criteria.

Physiognomic Perception

A specialized perceptual style called physiognomic perception fits rather well into Guilford's view of somatic source filtering. Physiognomic perception is similar to poetic personification. It is a form of empathetic reaction which blends affective, connotative elements with cognitive experience--for example, viewing a dilapidated building or car as tired (Chaplin, 1968).

Werner (1957) believes that physiognomic perception develops before concept formation. Since it precedes other forms of perception he considers it a primitive perception form. He bases his view on observations of physiognomic perception in children, primitive languages, poetry, schizophrenic subjects' language, and reports of mescaline-taking subjects (Stein, 1974).

Stein points out that this perception is relevant in the study of creativity because individuals can become skilled in using it creatively

(Guilford, 1970)

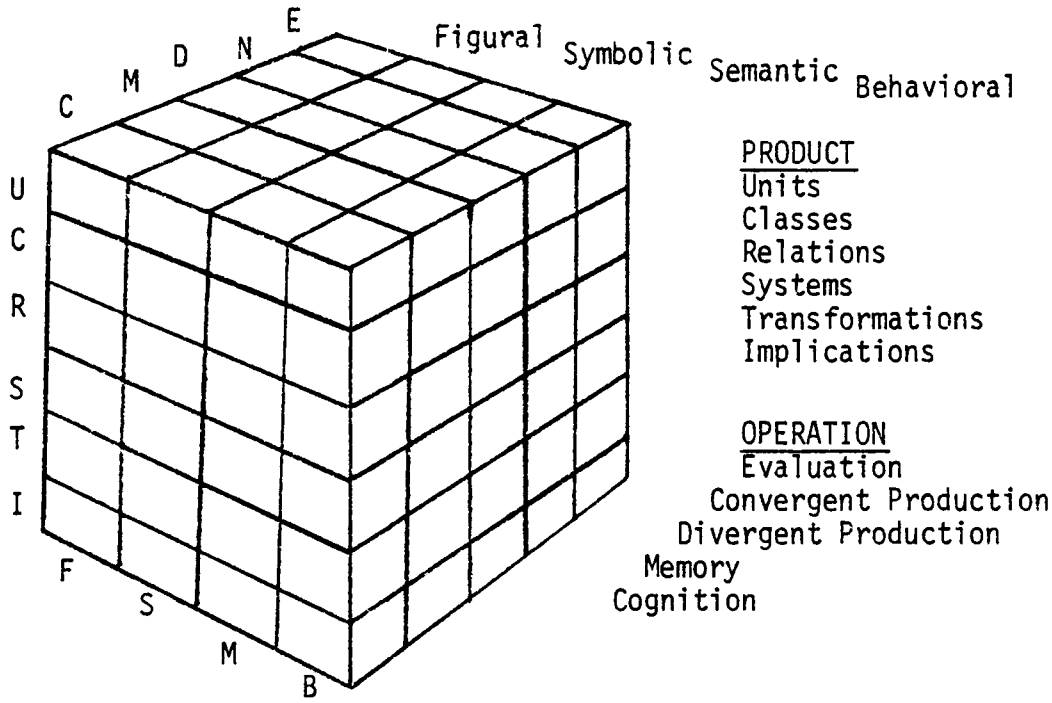

Definitions of SI Concepts

OPERATIONS are the major kinds of intellectual activities or processes; things that the organism does with the raw materials of information. Information is defined as that which the organism discriminates.

C--Cognition: Immediate discovery, awareness, rediscovery, or recognition of particular items of information; understanding or comprehension.

M--Memory: The commission of information to memory storage, not to be confused with the memory store itself.

D--Divergent production: Generation of information from given information, where the emphasis is upon variety and quantity of output from the same source; a search for logical alternatives.

N--Convergent production: Generation of information from given information, where the needed information is fully determined by the given information; a search for logical imperatives.

E--Evaluation: Comparison of information with respect to given specifications in accordance with logical criteria such as identity and consistency.

CONTENTS are broad classes or types of information: information classified according to its substantive nature.

Figure 3. Theoretical model for the complete Structure-of-Intellect.

F--Figural: Information in concrete form, as perceived or as recalled in the form of images. The term "figural" minimally implies figure-ground, perceptual organization. Includes auditory and kinesthetic subclasses as well as visual.

S--Symbolic: Information in the form of denotative signs, having no significance in and of themselves, such as letters, numbers, and words when things they stand for are not considered.

M--Semantic: Information in the form of meaning to which words commonly become attached, hence most notable in verbal thinking and verbal communication, but not identical with words. Meaningful pictures also convey semantic information.

B--Behavioral: Information, essentially nonverbal, involved in human interactions where the attitudes, needs, desires, moods, intentions, perceptions, thoughts, etc., of other people and of ourselves are involved.

PRODUCTS are forms that information takes in the organism's processing of it. Information classified according to formal characteristics.

U--Units: Relatively segregated or circumscribed items of information having "thing" character; many be close to Gestalt psychology's "figure on a ground."

C--Classes: Conceptions underlying sets of items of information grouped by virtue of their common properties.

R--Relations: Conceptions of connections between items of information based upon variables or points of contact that apply to them.

S--Systems: Organized or structured items of information; complexes of interrelated or interacting parts.

T--Transformations: Changes of various kinds--redefinitions, shifts, revisions, or modifications--in existing information or in its function.

I--Implications: Extrapolations of information in the form of expectancies, predictions, or known or suspected consequences.

Figure 3. (Continued)

through the previously discussed regression in the service of the ego.

Stein states he knows of no training programs designed to train individuals to become physiognomic in their perceptions, but does point out synectics as a problem-solving method which makes good use of physiognomic manipulation.

This writer has observed that some forms of creative dramatics (Davis, Helfert, & Shapiro, 1973; Eberle, 1974) offer excellent training vehicles for physiognomic perception training. For example, Davis and his colleagues note about their People Machine activity:

> . . . Students can create [an] ice cream (or donut or environment clean-up) machine, with or without humms, buzzes, beeps and boops. Students can spontaneously join action, or join systematically one by one. All can move, or else every other one can make a noise to match his neighbor's movement. Slow it down, speed it up. One of the best is a people machine with makes people on an imaginary assembly belt. (p. 41)

Synectics

Through the description above it is a simple matter to see the metaphoric connections with the synectics mechanisms of personal analogy, direct analogy, symbolic analogy, and fantasy analogy (Gordon, 1961).

Of the four types of synectics analogies, personal analogy most resembles the creative dramatics (based on physiognomic perception) that is being discussed here. Personal analogy requires personal identification with the problem at hand. The investigating person becomes the problem--feeling and thinking as the problem might. It is in a sense an ultimate role assumption since the problem solver may well assume the role of even inanimate objects.

Gordon cites Kekule's identifying himself with a snake swallowing its tail to make his major benzine ring discovery. Gordon also explains:

> . . . The creative technical person can think himself to be a dancing molecule, discarding the detachment of the expert and throwing himself into the activity of the elements involved. He becomes one of the molecules. He permits himself to be pushed and pulled by the molecular forces. He remains a human being but acts as though he were a molecule. (p. 38)

Direct analogy is more concerned with the actual comparison of facts, knowledge, and/or technology that run parallel or operate in similar manners. Biological comparisons are often fruitful here. For example, Gordon cites MacKenzie's (1928) account of Alexander Graham Bell's recollection of inventing the telephone.

> It struct me that the bones of the human ear were very massive, indeed, as compared with the delicate thin membrane that operated them, and the thought occurred that if a membrane so delicate could move bones relatively so massive, why should not a thicker and stouter piece of membrane move my piece of steel. And the telephone was conceived. (pp. 72-73)

Symbolic analogy is similar to personal analogy except its problem-solving images are more objective and impersonal. It too is a form of physiognomic perception in that the analogy image sacrifices technological accuracy for esthetic satisfaction.

Fantasy analogy starts with wish fulfillment and works back, often inverting logic and circumventing established scientific laws. It is a "let's pretend" approach aimed at clearing the way for novel viewpoints that are unreachable through direct logic.

What follows is Gordon's (1961) account of how fantasy analogy intertwined with personal, direct, and symbolic analogy manipulation when one of his groups was faced with the problem of inventing a vapor-proof closure for a space suit:

> G: Okay. That's over. Now we need a crazy way to look at this mess. A real insane viewpoint . . . a whole new room with a viewpoint!

T: Let's imagine you could will the suit closed . . . and it would do just as you wanted by wishing . . . (Fantasy Analogy mechanism).

G: "Wishing will make it so. . . ."

F: Shh, Okay. Wish fulfillment. Childhood dream . . . you wish it closed, and invisible microbes, working for you, cross hands across the opening and pull it tight. . . .

B: A zipper is a kind of mechanical bug (Direct analogy mechanism). But not tight . . . or strong enough. . . .

G: How do we build a psychological model of "will-it-to-be-closed"?

B: He means if we could conceive of how "willing-it-to-be-closed" might happen in an actual model--then we . . . .

R: There are two days left to produce a working model--and you guys are talking about childhood dreams! Let's make a list of all the ways there are of closing things.

F: I hate lists. It goes back to my childhood and buying groceries. . . .

R: F, I can understand your oblique approach when we have time, but now, with this deadline . . . and you still talking about wish fulfillment.

G: All the crappy solutions in the world have been rationalized by deadlines.

T: Trained insects?

D: What?

B: You mean, train insects to close and open on order? 1-2-3 Open! Hup! 1-2-3 Close!

F: Have two lines of insects, one on each side of the closure--on the order to close they all clasp hands . . . or fingers . . . or claws . . . . whatever they have . . . and then closure closes tight. . . .

G: I feel like a kind of Coast Guard Insect (Personal Analogy mechanism).

D: Don't mind me. Keep talking. . . .

G: You know the story . . . worst storm of the winter--vessel on the rocks . . . can't use lifeboats . . . some impatient hero grabs the line in his teeth and swims out . . . .

B: I get you. You've got an insect running up and down the closure, manipulating the little latches . . . .

G: And I'm looking for a demon to do the closing for me. When I will it to be closed (Fantasy Analogy mechanism), Presto! It's closed!

B: Find the insect--he'd do the closing for you!

R: If you used a spider . . . he could spin a thread . . . and sew it up (Direct Analogy).

T: Spider makes thread . . . gives it to a flea. . . . Little holes in the closure . . . flea runs in and out of the holes closing as he goes. . . .

G: Okay. But those insects reflect a low order of power. . . . When the Army tests this thing, they'll grab each lip in a vise one inch wide and they'll pull 150 pounds on it. . . . Those idiot insects of yours will have to pull steel wires behind them in order. . . . They'd have to stitch with steel. Steel (Symbolic Analogy mechanism).

B: I can see one way of doing that. Take the example of that insect pulling a threat up through the holes. . . . You could do it mechanically. . . . Same insect . . . put holes in like so . . . and twist a spring like this . . . through the holes all the way up to the damn closure . . . twist, twist, twist, . . . Oh, crap! It would take hours! And twist your damn arm off!

G: Don't give up yet. Maybe there's another way of stitching with steel. . . .

B: Listen . . . I have a picture of another type of stitching. . . . That spring of yours . . . take two of them . . . let's say you had a long demon that forced its way up . . . like this. . . .

R: I see what he's driving at. . . .

B: If that skinny demon were a wire, I could poke it up to where, if it got a start, it could pull the whole thing together . . . the springs would be pulled together closing the mouth. . . . Just push it up . . . push--and it will pull the rubber lips together. . . . Imbed the springs in rubber . . . and then you've got it stitched with steel! (pp. 49-51)

While the solution may not be clear to the nontechnical reader, the point behind including the transcription should be. Creative problem solving sometimes involves a degree of self-deceit to break free of

habitual responses. Synectics is one system which works toward pragmatically achieving this.

Role Playing and Altered States of Consciousness

Role playing is a logical metaphoric connector between the discussions of synectics and altered states of consciousness, since synectics uses role playing somewhat (particularly in personal analogy) and since the taking on of a new feeling or personal identity (with a person, animal, object, or idea) can promote an altered state of consciousness.

Discussing its value Stein (1974, p. 64) says, "Role playing . . . if an individual can allow himself the psychological freedom to engage in it, can prove of value in some aspects of the creative process." There is research evidence to back up this viewpoint.

For example, Brown (1965) developed in his subjects symbols for the creative subself and noncreative subself that existed in each of them. He used these symbols to trigger whichever image he wished the subjects to assume. His report indicates that subjects performed significantly better when their creative subselves were in operation. Brown's study can be questioned as to whether the creativity symbols actually enhanced creativity or whether the difference came from the noncreativity symbol decreasing creative performance.

A more convincing study was done by Brown and Leary (1961), and reported by Leary (1964) and Stein (1974). In their study twenty pairs of Rhode Island School of Design juniors were matched by faculty ratings for creativity and were pretested with a variety of tests including the Barron tests for originality, independence, and preference for complexity; and the Guilford Plot Titles Test.

The matched dyads were divided into two groups with one asked to "play the role of an extraordinarily original and creative person." The other group was requested "to play the role of a highly intelligent (authoritarian) person" (Leary, 1964, p. 98). Afterwards Barron's test of originality was readministered and Guilford's Unusual Uses Test was given to the subjects for the first time. The findings that the group assuming the role of the creative person did significantly better on the Guilford Unusual Uses Test suggested to Leary (1964, p. 98) "that role playing, or set taking, is a specific mechanism for increasing creativity."

Commenting on these studies Stein (1974) concludes:

> One inference that might be drawn from the experience with role playing is that some people have more potential for creativity than they manifest. One of the possible reasons for this is that through much of their lives such people have been told that they are not creative and they then proceed to validate this statement by their behavior. If they were regarded more positively insofar as creativity is concerned, or if they were given license to behave like creative individuals through some method or other, like role playing, they could likely change into being more creative individuals. (p. 66)

A particularly interesting study was done by Bowers (1967) on the comparative effects of hypnosis and suggestions of reduced defensiveness on creativity. In that study she screened 450 University of Illinois undergraduate women with the Harvard Group Scale of Hypnotic Susceptibility Form A, using only highly susceptible subjects scoring seven or more. She found that hypnotized subjects performed significantly better than the nonhypnotized control group on Guilford's Alternate Uses, Consequence, Simile Insertions, and Plot Titles creativity tests. Bowers (1967) cites an unpublished study by K. S. Bowers in which subjects simulating hypnosis attained the same originality scores as their hypnotized counterparts. Of this she (P. Bowers) comments:

> One might speculate, as does [K. S.] Bowers, that the reason creativity scores of Ss simulating hypnosis equal scores of actually hypnotized Ss is because simulating Ss are less defensive than a task-motivated control group. Unlike the latter Ss, simulating Ss may perceive the situation as one in which they need not assume personal responsibility for their test responses. After all, they are only "pretending." (p. 320)

Additional support for the role of affect in the creative process comes from research by Samuels and Samuels (1975). They observe:

> New images come to awareness as novel ideas, illuminations or flashes in ordinary consciousness. They seem to come most readily in a state of reverie. The reverie state includes dreams, daydreams, fantasies, visions, hallucinations, hypnagogic and hypnopompic imagery. All of these forms of the reverie state are closer to unconscious thought than to ordinary consciousness, and they provide access to consciousness for images from the unconscious. Receptive visualization likewise provides access to unconscious images. It gives people a more controlled means of getting in touch with the spontaneous new images that form the basis of their creativity.
>
> Doing a receptive visualization, like experiencing other reverie states, allows new images to surface free to censorship from the ego. Ego censorship often inhibits the formation of new images and/or tends to make potential images combine in known, stereotyped ways.
>
> Another characteristic of receptive visualization is that it puts a person in an attitude of relaxed awareness. This state of relaxed awareness is also achieved by Eastern meditation techniques which have been used throughout history by artists in India, Tibet and Japan to stimulate their creative efforts. (p. 255)

Samuels and Samuels additionally comment:

> We believe that the conditions surrounding creative effort, the conditions under which people receive spontaneous visualizations, can be consciously created, reproduced and controlled. The door to the creative state is receptive visualization. Receptive visualization occurs at a level of non-ordinary consciousness which produces inner imagery. The receptive visualization state has all the characteristics associated with the stages of incubation and creative illumination:
>
> *access to images from the unconscious
> *lack of ego censorship
> *freedom from labeled ideas
> *identification with the object-image
> *autonomy of imagery
> *symbolization. (p. 256)

Note the inclusion of symbolization--a form of metaphorizing. Its importance should be obvious. When people deal with the unknown, understood symbols help give the novel idea metaphorical life.

Similarly Green, Green and Walters (1974) reporting on brainwave research done at The Menniger Foundation explained:

> There are four major brain rhythms--the beta rhythm (13 to 26 cycles/second) is associated with active thinking, or active attention, attention focused on the outside world or on solving a concrete problem; the alpha rhythm (8 to 13 cycles/second) is associated with a relaxed internally focused state, the mind is alert but at ease, not focused on external processes nor engaged in organized, analytical, or problem-solving thinking; the theta rhythm (4 to 8 cycles/second) is usually associated with drowsy or near-unconscious states, it appears as consciousness slips toward unawareness and is often accompanied by hypnagogic and dream-like images. A fourth frequency band, the delta rhythm (1/2 to 4 cycles/second) is primarily associated with deep sleep. . . .
>
> Many of the experiments carried out in our laboratory over the last few years (Green, E. et al, 1971; Green, A. et al 1971) have indicated the existence of a relationship between theta brain rhythms, a subjective state that we call reverie, and hypnagogic imagery, imagery that seems to spring into the mind from unconscious sources. That there is also a relationship between reverie, hypnagogic imagery and creativity, is revealed by the many reports in the literature of creative ideas that have come out of states of reverie and near-dream.

Fantasy

Fantasy is a logical focal point for tying the research on altered states of consciousness to the experiment used in this study. But the connection is still somewhat metaphoric in that the experiment performed in this study used fantasy as a stimulus. This is somewhat contrary to the general research direction on the nature of fantasy, but it is not incongruent.

Freud (1900), for example, categorized fantasy, dreams, and play as "primary process." Rational instrumental thought was categorized "secondary process." As discussed earlier in this chapter, under primary

process an individual does not concern himself with fitting into the structure of the environment, and thus does not utilize feedback as a correction mechanism. Under secondary process the individual works toward achieving an intended effect and indeed uses feedback mechanisms to guide behavior.

But Freud was discussing fantasy as a spontaneous behavior, not as an induced stimulus. Such fantasy now is "free fantasy" and it differs from "projective fantasy" (Holt, 1961; Singer, 1966). Projective fantasy, by comparison, is "a subject's overt symbolic behavior when he is confronted with a more or less standard, more or less ambiguous stimulus, and is instructed to communicate to an examiner certain of his responses to it" (Klinger, 1971, p. 90). The TAT and Rorschach inkblot tests are two of the more common projective techniques used to investigate projective fantasy.

Thus the difference mentioned in the paragraphs above is that of fantasy being structured as a stimulus, or imput, as opposed to measured as a response, or output.

Klinger theorizes that individuals have a repertory of well-organized self-states which he calls "subselves" (1971). This, by the way, fits with Brown's (1965) approach, mentioned earlier in this chapter.

Klinger's subselves constitute what would commonly be explained as the many facets of an individual's personality. When one of the subselves is elicited, certain categories of fantasies peculiar to that subself emerge while other fantasy categories are repressed. Says Klinger, "Thus eliciting an affectively powerful subself exerts a strong influence on the content of fantasy (1971, p. 352).

With a huge metaphoric leap one might reverse the proposition and infer that a powerful fantasy can exert a strong influence on the subself one might draw upon. Leaping further out on this metaphoric limb, one might infer that if the subself brought forth were creatively inclined (but generally repressed) creative problem solving might be significantly facilitated. Klinger, however, is quick to note the lack of empirical backing in the relationship between fantasy and problem solving (1971):

> Dispite the growing agreement that fantasy plays a role in problem solving, the evidence so far appears to rest on speculation, anecdotes, literary allusions, clinical observations, and occasional studies of individual differences. Direct, rigorous investigation seems altogether lacking. (p. 42)

A Recapitulation

Recapping, the chief implication of the affective gatekeeper theory in creativity is that although metaphoric thinking is mainly a cognitive process, it requires affective support to be optimally utilized.

It is important to reemphasize that the affective gatekeeper is in itself a heuristic metaphor, and its use here is to metaphorically tie together a number of well accepted psychological paradigms.

In the light of the research and opinions cited in this paper, this writer believes that a metaphorical, altered state of consciousness approach using structured fantasy to increase personal creativity is viable. The question at hand is whether or not individuals require the training and lengthy practice commonly associated with meditation and biofeedback techniques.

Drawing both directly and indirectly (i.e., metaphorically) from the studies cited, this writer suggests that a viable shortcut to short-range increases in creative problem-solving behavior might lie in

temporarily adopting traits common to highly creative people (as discussed in the first section of this chapter). From a theoretical basis this would possibly facilitate creativity through at least temporarily facilitating regression in service of the ego. Certainly, it would seem, a relaxing, metaphoric approach to this role assumption would tend to relax defenses enough for at least tentative "let's pretend" adoptions of various relevant creative subselves.

The review of related literature indicates that if such an approach works it would have little difficulty fitting into many of the related paradigms commonly accepted by researchers today. But this writer believes that the true value would lie in the pragmatic day-to-day use and development of creative subselves through use and development of similar structured fantasy tools.

The Torrance Tests' Reliability and Validity

The Torrance Tests of Creative Thinking (1966) were selected for this study for their pervasive use by other creativity researchers, and for their well documented reliability and validity.

Torrance (1974b) discusses the tests' various reliabilities and validities in depth. Of particular interest to this writer was the extremely high interscorer reliability of the Torrance verbal tests. In a study of his comparing experienced and inexperienced scorers Torrance reports interscorer reliability coefficients of .99 for fluency, .95 for flexibility, and .98 for originality when comparing a sample of 100 verbal tests.

Test-retest reliability, Torrance continues, is most affected by motivational conditions. The closest test-retest time interval to this

researcher's design that is reported by Torrance is Mackler's study (1962) in which he tested three forms of the Torrance Ask-and-Guess Test with two weeks between each test. Mackler reportedly found a .82 reliability coefficient between the first and second testings, a .89 between the second and third and a .84 between the first and third testings.

The construct validity of the Torrance tests as they related to adults has been tested in several ways. Weiser (1962), Torrance notes, found a significant difference between the upper 27 percent and the lowest 27 percent of 282 undergraduates taking the Torrance tests and marking creativity-related adjectives on a self-evaluation adjective checklist. Additionally, Torrance and Hansen (1965) report using the Torrance tests to identify teachers of high and low creative ability and finding significant differences in questioning ability as measured in classroom situations and scored by the Burkhart-Bernheim measure of divergent power.

On the other hand, Davis and Belcher (1971) when testing twenty-two college males found particularly low intercorrelations between the Torrance tests and the Remote Associates Test (RAT) and the Alpha Biographical Inventory (ABI). The latter test is actually a measure of a subject's personal history.

The Davis and Belcher finding notwithstanding, the ubiquity of the Torrance tests in creativity research tends to lend some indirect credence to the construct validity of the tests. In fact, in a survey of 144 studies relating to teaching creativity Torrance (1972) found 106 of them had used the Torrance tests as their criteria. Torrance (1974b) has since commented about this survey:

> It will be noted that 71 percent of the efforts were successful. The more deliberate and disciplined methods such as the

> Osborn-Parnes methods of creative problem solving, training in general semantics, and the like produced success in over 90 percent of the efforts. In the author's opinion, this mass of studies gives indirect but powerful evidences of construct validity for the tests. Performance on the tests was improved by kinds of treatment logically expected to produce such improvement. (p. 33)

There are numerous studies attesting to the predictive validity of the Torrance Tests of Creative Thinking. Table 1 was taken from Torrance (1974b, p. 44). It summarizes six short-range (one week to nine months) predictive validity studies which used the Torrance tests. Additionally, Table 2 represents yet more data taken from Torrance (1974b, p. 45) citing studies of long-range predictive validity.

TABLE 1

SUMMARY OF SHORT-RANGE (ONE WEEK TO NINE MONTHS) PREDICTIVE VALIDITY STUDIES OF THE TORRANCE TESTS OF CREATIVE THINKING

Investigator and Date	Sample	Number	Creative Behavior Predicted	Level Signif-icance
Weisberg & Springer, 1961	Gifted 4th Graders	32	Humor, fantasy, etc.	<.01
Torrance 1963	2nd-6th Graders	125	Creative ideas about science toys and uses	<.01
Yamamoto, 1963	5th & 6th Graders	40	Originality of imaginative stories	<.01
MacDonald & Raths, 1964	Ages 9-12	72	Differential response to curriculum tasks	<.01
Torrance & Hansen, 1965	H.S. Bus. Teachers	12	Provocative classroom questions	<.01
Bentley, 1966	Grad. Stud. in Ed. Psyc.	75	Subject matter tests of productive thinking (r = .53); inventive-level of creative solutions to mental health problems (r = .38)	<.01

TABLE 2

SUMMARY OF LONG-RANGE PREDICTIVE VALIDITY STUDIES OF THE TORRANCE TESTS OF CREATIVE THINKING

Investigator and Date	Sample	Number	Length Study	Behavior Predicted	r
Torrance, Tan & Allman, 1970	Junior Elem. Ed. Majors	114	8 yrs.	Creative Teaching Behavior	.62* .57*
Torrance, 1969	12th Graders	46	7 yrs.	Highest Creative Achievement Quantity of Creative Achievement Creativeness of Aspiration	.50* .46* .51*
Cropley, 1971	7th Graders	111	5 yrs.	Creative Achievement Out of School	.51*

*Significant at better than the .01 level.

CHAPTER III

PROCEDURES

Development of Treatment Procedure

After receiving permission to conduct this study from The University of Tennessee Human Subjects Council, refining of the structured fantasy procedure began with the aid and assistance of Dr. Robert M. DeRycke, an academic interested in such procedures.

From August, 1976, through December, 1976, various procedures were practiced on volunteer students, graduate teaching assistants, as well as interested members of The University of Tennessee administration and faculty. Much valuable feedback was obtained from graduate teaching assistants, administrators, and faculty involved in creative teaching workshops. These workshops were designed and conducted by Dr. Robert M. DeRycke (chief coordinator), Dr. Yulan M. Washburn, Dr. Phillips H. Hamlin, and Daniel S. Bagley III--this writer.

The most significant finding of the pilot studies was that many subjects, not practiced in the structured fantasy technique, reported that the insertion of large metaphoric leaps into the fantasy broke their concentration. For example, asking subjects to imagine holding a ball of clay, then willing the clay to form itself into a shape symbolizing some problem at hand, typically drew reports of momentary fantasy disruption. This technique was, however, not without its isolated successes. A 23-year old male graduate teaching assistant, for example, reported watching his ball of clay form into a large podium and suddenly realized his

tendency to hide behind a podium when teaching. It is well documented in synectics research (Gordon, 1961; Prince, 1970) that such metaphoric leaps come easier with training and practice.

The experiment being analyzed here was conducted on March 4 and March 7, 1977. The pretest was given on the first day (a Friday morning), and the treatment and posttest were given on the following Monday morning. (See Figure 3)

Subjects

The subjects used in the experiment were students enrolled in a college-level public relations class at The University of Tennessee College of Communications during the 1977 winter quarter. Their ages ranged from 20 years old to 29 years old with the median age being 22, and the mode, 21 years old. Their academic classifications ranged from junior to graduate student (M.S.).

A total of 27 student subjects participated in both the pretest and the posttest. Nine were female and 18 were male.

There was obviously a self-selection bias based on those taking public relations at the time of the experiment and those opting to participate in both the pretest and the posttest. Four subjects (all female) took the pretest and did not show up for the posttest. Three subjects (two male and one female) did not show up for the pretest but did take the posttest. Their test results are not included in this report.

The pretest was initially graded only in terms of fluency. All subjects taking the pretest were then ranked from highest to lowest fluency scores. On the morning of the posttest listed subjects were alternately assigned to one of two groups in order of fluency scores. A

	t_1	t_2	t_3
S_{1a}	M_{1a}- M_{5a}	CE	M_{1b}- M_{tb}
S_{1b}	M_{1a}- M_{5a}	CNX	M_{1b}- M_{5b}

S_{1a} Control group selected from a public relations class at The University of Tennessee through stratified randomization of pretest fluency scores.

S_{1b} Experimental group selected from a public relations class at The University of Tennessee through stratified randomization of pretest fluency scores.

t_1 Friday morning, March 4, 1977. (Approximately forty minutes of testing.)

t_2 Monday morning, March 7, 1977. (Approximately ten minutes of treatment.)

t_3 Monday morning, March 7, 1977, immediately following treatment. (Approximately forty minutes of testing.)

M_{1a}-M_{5a} The first five activities of the Torrance Tests of Creative Thinking, Verbal Form A.

M_{1b}-M_{5b} The first five activities of the Torrance Tests of Creative Thinking, Verbal Form B.

CX Controlled exposure to structured fantasy.

CNX Controlled nonexposure to structured fantasy.

Figure 4. Experimental design.

toss of a coin was then used to decide which group was to be experimental and control.

The rank-order alternation of subjects was a form of stratified randomization. The groups were not informed whether they were experimental or control.

The only incentive used was that subjects would be told their creativity scores and class ranking after all grading was done.

Apparatus

The only mechanical apparatuses used in the experiment were a watch (for timing the creativity tests) and a small cassette tape recorder to record the experimental treatment. As Murphy's Law would have it the cassette tape jammed, missing part of the treatment recording. This, however, should only minimally affect replication as will be explained in the next section of this chapter.

The testing instruments used were the Torrance Tests of Creative Thinking Verbal Forms A and B (Torrance, 1966). The specific activities used were: ASKING, GUESSING CAUSES, GUESSING CONSEQUENCES, PRODUCT IMPROVEMENT, and UNUSUAL USES. The UNUSUAL QUESTIONS and JUST SUPPOSE activities were not used because of time limitations.

Procedure

The pretest and posttest were given in a classroom in The University of Tennessee College of Communications.

Before the pretest the student subjects were read the following:

> We are investigating different methods of incubation and creativity preparation to determine which are most conducive to creative problem solving.
> You will be given two tests of creativity. Today is the first.

> Please do not discuss your test until after Monday. On Monday we will randomly divide into two groups. One group will proceed with group-oriented (social) preparation while the other group will proceed with self-related (individual) preparation. These sessions will be followed by another series of tests similar to the ones you just took.
>
> Your scores will be confidential. They will be graded after the quarter is over. Your scores will give you an indication of your verbal creative problem-solving abilities as measured by the Torrance Tests of Creative Thinking.
>
> This exercise should help you better understand your brainstorming ability, should you care to develop it for future use.
>
> You will be subjected to no surprises or induced stress. To the contrary, we expect you to find these exercises challenging and interesting.
>
> At the end of the entire exercise on Monday we will have a brief roundtable discussion about the questions that you might have and generally facilitate you in attaining a better understanding of the creativity process and how to use it in brainstorming.
>
> If at this point, or at anytime, for any reason, you feel that you would not like to participate in this exercise you are and will be free to withdraw without any prejudice or penalty. If you have a question that you feel must be asked now rather than after the exercise please ask it now.

There were no questions, so the Torrance Tests of Creative Thinking were administered.

On the following Monday the subjects were divided into two groups through the stratified randomization process described earlier in this chapter. Dr. DeRycke was introduced as the person who would facilitate the individual, self-related, preparation group, while Bagley would facilitate the group-oriented, social, preparation group in the next room.

The group-oriented control group simply went into a nearby room and were encouraged to relax and chat if they wished in order to be ready to take the posttest in about ten minutes. They were asked not to discuss the test itself, however. There was informal chatter between individuals and among small groups during this time. There was joking

among friends and the atmosphere appeared to this writer to be generally friendly and relaxed. Some asked when they would know how they did. They were told they could find out their scores next quarter (in about four weeks).

The experimental group stayed in the original classroom with Dr. DeRycke. As indicated, the cassette tape malfunctioned during the treatment so part of the treatment transcript included herein might vary slightly from the exact wording used. The treatment elements, however, were outlined tightly enough to allow missing tape parts to be easily reincluded, even though Dr. DeRycke was encouraged to use wording comfortable to his manner of speaking while covering the outlined points.

Specifically, approximately a third of the fantasy (paragraph four through point ten of paragraph 5) has been reconstructed from the outline given to Dr. DeRycke. This should not create replication problems since individuals using suggestion techniques commonly use wording comfortable to their own manner of speaking to avoid sounding contrived.

The experimental treatment--i.e., structured fantasy--was as follows:

> Make yourself comfortable. Put your feet on the floor. Place your hands where they're most comfortable. Become aware of your breathing. Try to tune in as much as you can to my voice, excluding other thoughts just listening to this monotonous voice which helps you concentrate on your breathing. Notice the beautiful regularity of your breath. No need to control it. Most of the time you breathe in a very relaxed way automatically. This is what you're tuning into now. Now slowly increase the depth of your breath, inflating your abdomen, then your chest, then exhale very slowly and do it again. And once again.
>
> Imagine that you are totally concentrating on my voice merely as a focal point. You remain in control. I'm going to mention various parts of the body and I would like for you to imagine there is a switch. When a part of your body is mentioned, please imagine there is a click of the switch and relaxation flows into

that particular part of your body. No matter how relaxed you are now, you will relax more when we use this exercise. Imagine relaxing more when we use this exercise.

Left leg, switch. Feel the relaxation flowing through your left leg. Right leg, switch. Feel the relaxation flowing through your right leg. Left arm, switch. Feel now the relaxation rushing through your left arm. Right arm, switch. Here too feel the relaxation rushing all the way down from your shoulders to your finger tips. Stomach, switch. Feel your stomach filling up with relaxation. Chest, switch. Your whole chest fills up with a rush of relaxation. Face, switch. Feel all the muscles letting go and being replaced by a serene sense of relaxation. Shoulder and neck, switch. Feel now the relaxation spreading through your shoulders and your neck. Brain, switch. Feel the merry-go-round of your thoughts slowing down, slowing down, slowing down till your mind stands still and can focus and can pay attention.

Now you are totally relaxed. Your body is asleep but your mind is wide awake. You are in complete control. Whatever you wish to imagine, you may because you are totally relaxed and in complete control. You feel very good about yourself.

Now as you are relaxed and feeling very good about yourself I would like for you to consider twelve very positive traits you already possess. You're familiar with all of them though you might not have thought about them recently. As I mention them one by one I'd like for you to remember how good these traits feel and imagine that you are writing them down in your mind as you feel that way right now. One, I am quite imaginative and thoroughly creative, often having original ideas. Two, I often enjoy being enthusiastic. In fact becoming enthusiastic makes me feel very good. Three, I can be extremely self-confident, having a great deal of confidence in my personal creativity. Four, I am not afraid to take risks and try new ideas. Five, I am often quick witted with a good sense of humor. In fact I greatly enjoy funny and crazy things. Six, I am often very curious about a great many things. Seven, I am often a very active, energetic person. Eight, I am quite independent and able to think for myself. Nine, I am interested in a great many things. In fact, wherever I look I find fascinating creative ideas. Ten, I rather enjoy ambiguity and complex situations because they give me a fine chance to stretch my imagination and shine. Eleven, I thoroughly enjoy thinking of new and different things. And twelve, I thoroughly enjoy thinking of new words to do my thinking with.

You are deeply relaxed. Your body is now asleep while your mind is wide awake. You're very relaxed. Now write as your final instruction, "I am going to be spectacular in the experiment." You're deeply relaxed. In a minute I'm going to ask you to open your eyes. All your senses will be sharpened. You will hear more acutely, see more sharply, smell more distinctly. Your skin will be more sensitive in your hands. All your senses will be sharpened.

I will count backward from five to one. And at the count of

one your eyes will open automatically and you will be ready to go, feeling different, better about yourself.

Five, four, three, two, one. Eyes wide open, you feel alert, wide awake.

Following the treatment period all subjects were reunited in the original classroom and the first five activities of the Torrance Tests of Creative Thinking, Verbal Form B were administered.

Because of time constraints the roundtable discussion and explanation of the experiment was not done until class time the following Wednesday morning.

CHAPTER IV

ANALYSIS OF DATA

Interscorer Reliability

Interscorer reliability when following the Torrance scoring guide is well documented (Torrance, 1974). Even so, a spot check of five pretests and five posttests was made to check the hired scorer's accuracy and lack of systematic bias. As expected, the hired scorer and the checker had all correlation coefficients in excess of .90.

Means, Standard Deviations and Norms

Table 3 shows the means and standard deviations for the overall pretest scores, posttest scores, and score changes in the dependent variabiles fluency, flexibility, and originality. These data are presented with the Torrance tests' five activities as the dependent variables in Table 4. These data indicate that the subjects used in this experiment scored higher than the average of college students cited by Torrance (1974) on fluency and originality.

Actually, Torrance's T-score conversion table (1974, p. 55) gives conversions for the totals of all seven of his activities. It is possible, however, to roughly interpolate using only five activities by allowing for the usual amount of increase in fluency, flexibility, and originality scores brought forth by the last two activities. Such interpolations suggest that the subjects used in the experiment averaged somewhat around the 56 percentile on fluency, the 49 percentile on flexibility, and the 76 percentile on originality when given the pretest. Of course,

TABLE 3

FLUENCY, FLEXIBILITY AND ORIGINALITY MEANS AND STANDARD DEVIATIONS FOR PRETEST, POSTTEST AND AMOUNT OF INDIVIDUAL CHANGE

	Pretest		Posttest		Change	
	Mean	SD	Mean	SD	Mean	SD
Fluency	82.96	22.15	97.74	24.46	14.78	14.94
Flexibility	36.67	5.80	41.26	6.46	4.59	5.65
Originality	98.89	31.28	121.11	35.42	22.22	22.84
Total	218.52	56.34	260.11	63.47	41.59	36.73

TABLE 4

ACTIVITY MEANS AND STANDARD DEVIATIONS FOR PRETEST, POSTTEST AND AMOUNT OF INDIVIDUAL CHANGE

	Pretest		Posttest		Change	
	Mean	SD	Mean	SD	Mean	SD
Activity 1	34.48	10.01	40.63	12.00	6.15	12.81
Activity 2	31.70	12.94	40.63	14.82	8.93	13.86
Activity 3	38.56	14.72	46.26	17.45	7.70	11.68
Activity 4	46.11	13.55	55.89	20.14	9.78	12.78
Activity 5	67.67	23.42	76.70	21.21	9.04	17.36
Total	218.52	56.34	260.11	63.47	41.59	36.73

the subjects' absolute scores were not used in comparing the experimentals and the controls beyond subtracting each subject's pretest from his posttest score to determine change. For this reason the above interpolations offer little to this study beyond the most general of background information regarding the subjects' creative abilities coming into the experiment.

Statistical Treatment

As indicated above, the data were investigated in terms of change between the pretest and the posttest with the former being subtracted from the latter for each subject. The score changes were analyzed through the Mann-Whitney U one-tail nonparametric procedure (Seigel, 1956). Because hand calculations of this ranking procedure are tedious and allow many opportunities for calculation errors the Biomedical nonparametric statistical package was used to perform the computations. These computations were also spot checked by hand.

A nonparametric procedure was used for two reasons. First, the sample size (i.e., twenty-seven subjects) lent itself to a small-sample procedure. Second, this researcher was not comfortable assuming the Torrance originality scores to be interval level data.

Composite Scores Comparison

First the score changes for all activities' fluency, flexibility, and originality were compared in composite form. In other words, the total change in fluency, flexibility, and originality for each individual was calculated and added together to give one composite creativity score. These composite scores were then compared through the Mann-Whitney U

ranking procedure with the independent variable being the treatment (or lack of it) and the dependent variable being the composite scores. As indicated in Table 5 there was a statistically significant difference between the experimental and control groups ($p<.01$).

When reading Table 5 (as well as those like it) the reader should keep in mind that since the cell sizes are different for the experimental and control groups their rank sums are not equal when the two groups are evenly ranked. In other words, because there is one more subject in the control group, an exact match of the two groups would yield a rank sum of 196.0 for the fourteen-member control group and 182.0 for the thirteen-member experimental group. The U statistic in such a case would be ninety-one with $p= .5$. It is also worth noting that when comparing the change between pretests and posttests a U statistic greater than ninety-one indicates movement opposite the hypothesized direction.

Having determined the composite creativity score changes, the next step was to determine where within the composite score most of the change occurred.

Total Fluency, Flexibility, and Originality Changes

Next the data were divided into total fluency, flexibility, and originality scores for each subject and the changes between the pretest and posttest were analyzed through the Mann-Whitney U technique.

Table 6 indicates the findings that the experimental group showed significantly more improvement than the control group in overall fluency ($p<.01$) and originality ($p<.025$). There was, however, no statistically significant difference between the two groups in terms of overall flexibility increases.

TABLE 5

MANN-WHITNEY U COMPARISON OF COMPOSITE FLUENCY, FLEXIBILITY, AND ORIGINALITY PRETEST-POSTTEST SCORE CHANGES BETWEEN GROUPS

Group	n	Rank Sum
C	14	147
E	13	231

U = 42

p = .0087 (one tail)

TABLE 6

MANN-WHITNEY U COMPARISON OF TOTAL
PRETEST-POSTTEST SCORE CHANGES

Group	Fluency		Flexibility		Originality	
	n	Rank Sum	n	Rank Sum	n	Rank Sum
C	14	134.0	14	210.5	14	155.0
E	13	224.0	13	167.5	13	223.0
U=	29		105		50	
p=	.0013		N.S.		.0233	

Changes Between Activities

The five separate activities--ASKING, GUESSING CAUSES, GUESSING CONSEQUENCES, PRODUCT IMPROVEMENT, and UNUSUAL USES--were investigated next. As indicated in Table 7, looking at the data this way revealed that the significant overall difference was based largely on Activities 2 and 3--i.e., GUESSING CAUSES ($p<.01$) and GUESSING CONSEQUENCES ($p<.025$). A possible inference would be that the treatment significantly affected the subjects' creative ability through enhancing only guess-related skills. But this inference would be shakey since correlation does not prove causation. Additionally, if one were to graph the U Statistics of the five activities an equally thought-provoking possibility would arise: that of curvilinearity of treatment effect in terms of time. In other words, observing that the first three activities took five minutes each and the last two took ten minutes each, perhaps a five-minute warm-up occurred before performance peaked and steadily dropped with each successive activity until after twenty-five minutes the control group overtook and passed the fading experimentals. Of course, this too is based on after-the-fact correlation manipulation and also offers little more than interesting possibilities for future research since causation is again not proved.

Changes Within Activities

The final dissection of the data was to investigate each activity in terms of changes in fluency, flexibility, and originality. This was done to see whether or not the cumulative score change of each activity was hiding any significant changes in its fluency, flexibility, or originality scores. This approach also shed some light. For example,

TABLE 7

MANN-WHITNEY U COMPARISON OF TOTAL PRETEST-POSTTEST SCORE CHANGES IN ACTIVITIES 1 THROUGH 5

Group	n	Activity 1 Rank Sum	Activity 2 Rank Sum	Activity 3 Rank Sum	Activity 4 Rank Sum	Activity 5 Rank Sum
C	14	180.0	147.5	150.0	166.0	211.5
E	13	198.0	230.5	228.0	212.0	166.5
U=		75	42	45	61	106
p=		N.S.	.0092	.0126	.0724	N.S.

while Activity 1 (ASKING) did not cumulatively show significant increases, the increase in the experimental group's fluency scores were quite significant ($p<.025$). In fact, the flexibility of the experimentals also increased, falling just short of statistical significance with $p<.07$. These increases, however, were offset by there being virtually no difference in the amount of originality change between the two groups. (See Table 8.)

A logical interpretation of Activity 1, therefore, would be that the treatment did significantly affect the number of ideas produced without increasing originality. In other words, the experimentals produced significantly more unoriginal responses.

Activity 2 (GUESSING CAUSES) was the strongest showing for the experimental group in flexibility ($p<.06$) and originality ($p<.03$). Even so, flexibility only approached statistical significance (Table 9).

Table 10 summarizes the group differences in Activity 3 (GUESSING CONSEQUENCES). Again fluency and originality changes significantly favored the experimental group with $p<.001$ and $p<.05$ respectively. Flexibility increases, however, were nearly identical.

As Table 11 shows, the only statistical significance in Activity 4 (PRODUCT IMPROVEMENT) was in the experimental group's superior fluency improvement ($p<.05$). This group's originality scores did, however, approach statistical significance with $p<.06$. On the other hand, the control group registered a fairly strong flexibility change advantage in this activity. In other words, while the experimental group produced significantly more ideas and tended to appear more original, the control group tended to produce ideas in more categories. This served to move Activity 4's composite score out of the range of statistical significance.

TABLE 8

MANN-WHITNEY U COMPARISON OF ACTIVITY 1
PRETEST-POSTTEST SCORE CHANGES

Group	Fluency		Flexibility		Originality	
	n	Rank Sum	n	Rank Sum	n	Rank Sum
C	14	152.0	14	166.0	14	195.5
E	13	226.0	13	212.0	13	182.5
U=	47		61		90	
p=	.0160		.0687		N.S.	

TABLE 9

MANN-WHITNEY U COMPARISON OF ACTIVITY 2
PRETEST-POSTTEST SCORE CHANGES

Group	Fluency		Flexibility		Originality	
	n	Rank Sum	n	Rank Sum	n	Rank Sum
C	14	142.5	14	164.0	14	157.0
E	13	235.5	13	214.0	13	221.0
U=	37		59		52	
p=	.0046		.0576		.0288	

TABLE 10

MANN-WHITNEY U COMPARISON OF ACTIVITY 3
PRETEST-POSTTEST SCORE CHANGES

Group	Fluency		Flexibility		Originality	
	n	Rank Sum	n	Rank Sum	n	Rank Sum
C	14	126.5	14	197.0	14	158.5
E	13	251.5	13	181.0	13	219.5
U=	21		92		53	
p=	.0003		N.S.		.0339	

TABLE 11

MANN-WHITNEY U COMPARISON OF ACTIVITY 4
PRETEST-POSTTEST SCORE CHANGES

Group	Fluency		Flexibility		Originality	
	n	Rank Sum	n	Rank Sum	n	Rank Sum
C	14	160.5	14	218.5	14	162.5
E	13	217.5	13	159.5	13	215.5
U=	55		113		57	
p=	.0418		N.S.		.0516	

In Activity 5 (UNUSUAL USES) the control group showed more improvement than the experimentals in both flexibility and originality. The members of the two groups were virtually equal in fluency changes as Table 12 clearly indicates.

Since direction was indicated by the hypotheses, technically, statistically significance only exists in the hypothesized direction. Had, however, the hypothesis predicted control group success (i.e., a one-tail test in the opposite direction) flexibility improvement in Activity 5 would have been the controls' sole statistically significant victory with $p<.05$. This, however, is a moot point since such was not hypothesized, and the statistical significance was not strong enough even to be recognized by a two-tail test.

Figure 5 offers a visual comparison of the five activities and their fluency, flexibility, and originality components through graphing their U statistics based on their respective score changes.

From this figure it is easy to see at a glance that the experimental group members outperformed controls on four out of five activities, though only two showed statistical significance. The figure also makes clear that throughout the five activities the improvement in their fluency scores was the backbone of the experimental group's overall strong showing.

TABLE 12

MANN-WHITNEY U COMPARISON OF ACTIVITY 5
PRETEST-POSTTEST SCORE CHANGES

Group	Fluency		Flexibility		Originality	
	n	Rank Sum	n	Rank Sum	n	Rank Sum
C	14	195.5	14	231.0	14	208.0
E	13	182.5	13	147.0	13	170.0
U=	N.S.		N.S.		N.S.	

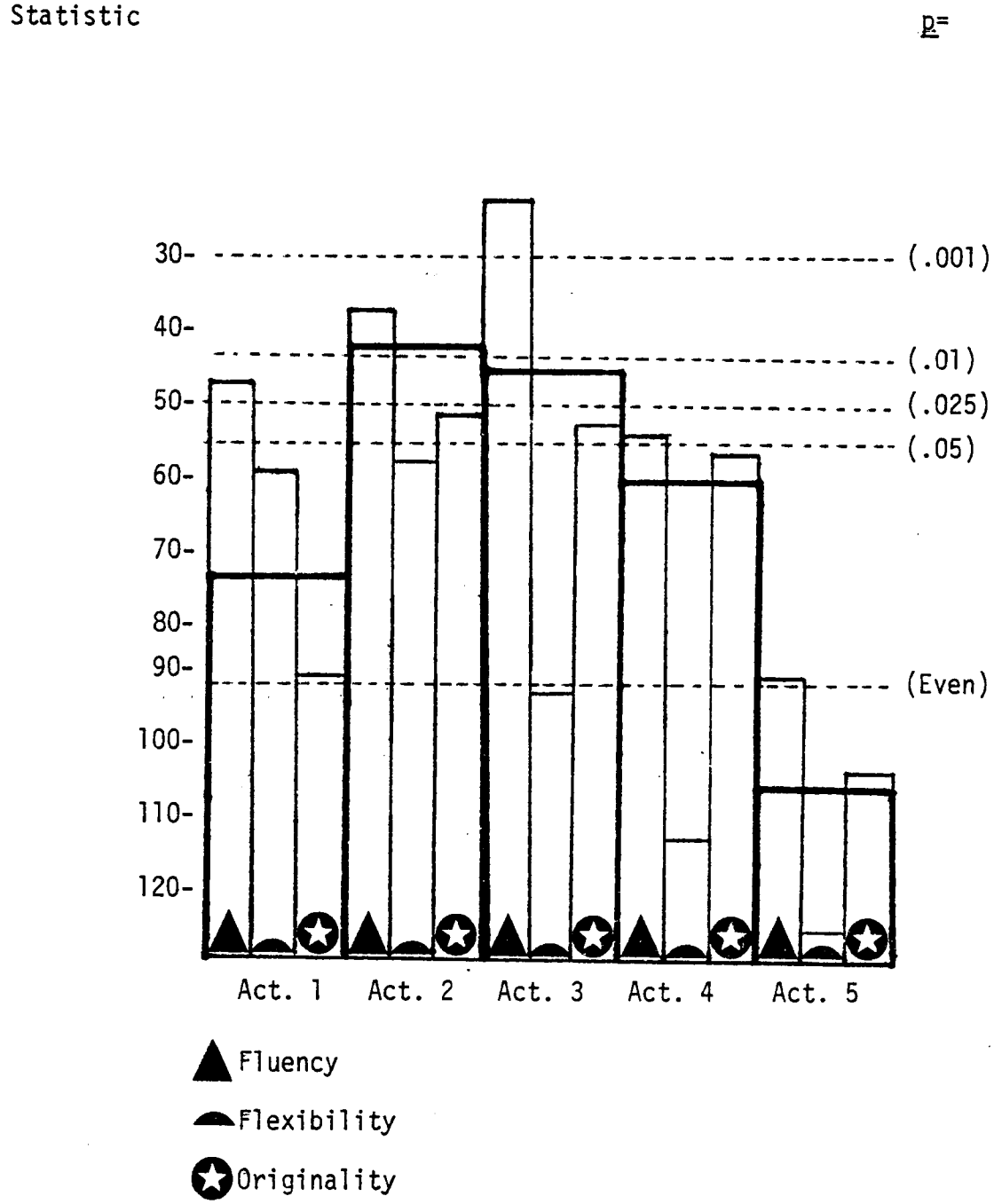

Figure 5. A graphed comparison of the U statistics for the first five Torrance activities.

CHAPTER V

SUMMARY

Conclusions

It was hypothesized in Chapter I that a structured fantasy used to enhance relaxation and positive, relevant, creative role assumption, presented in a metaphoric mode (to minimize habitual defenses) would result in increased creative problem solving performance as measured by the first five activities of the Torrance Tests of Creative Thinking, Verbal Forms A and B. The data obtained through the experiment supported this hypothesis.

It was also hypothesized that fluency, flexibility, and originality would all be enhanced by the treatment. It was found that overall fluency and originality scores of the experimentals did increase significantly, but there was no such gain in flexibility. In fact, overall flexibility changes slightly favored the control group.

Finally, it was hypothesized that the increased creativity of the experimental subjects would not vary significantly with tasks. This was not supported by the data.

Implications

Few things are ever proved in behavioral research. Theories are merely strengthened or weakened. Such is the case here.

The theory that the role of affect is strong in creative performance has been strengthened. The data certainly imply value in creative role assumption as well as structured fantasy as a tool for achieving it.

This researcher has inferred from primary and secondary research that most people have the ability to perform much more creatively than they generally realize. It's like hidden treasure, there for the taking if only one can remove his blinders. Structured fantasies as outlined here offer a systematic approach.

Realizing untapped resources implies challenge. To creative problem solvers the challenge is to recognize the importance of seeing himself as creatively capable of even more. To the educator the challenge extends to facilitating this insight in his students. And to the researcher of creativity is passed the challenge of creating constructs for better understanding while keeping in mind that these same constructs may well confound as much as they clarify. It is the fallacy of reification--the treating of our constructs of creativity, attitude, IQ, or whatever, as if they exist in some absolute form--elevating the importance of findings even as small as this.

This study has not opened any new horizons. At best it has simply blown a small patch of fog from a horizon that has been looked at for many years. But this does not diminish the challenge for future research.

Recommendations for Future Research

Probably the most urgent need for research along the lines of this study is that of replication with different subjects and different areas.

Next, the question of whether treatment effectiveness was influenced by time more than activity (or vice versa) should be investigated. The most obvious way would be to present the testing activities in different orders and at different time intervals after the treatment.

Different creativity criteria (other than the Torrance tests) need to be applied.

Investigating different forms of metaphoric fantasies and their interaction with individual needs and personality traits is certainly a direction worth traveling.

Ways of extending treatment effects need to be unearthed and given theoretical support.

Investigation into the role of a fantasy narrator who is present versus a recording might prove both theoretically and commercially illuminating.

The nature of problems most amenable to structured fantasy approaches must certainly be considered. Are such treatments best for paper and pencil exercises or personal dilemmas? Do structured fantasy techniques work better on verbal or figural problems?

Finally, effective, systematic methods of self-programming through structured fantasy should be researched since self-determination and expression are certainly at the heart of why creativity is personally valuable.

A Parting Caveat

This paper has intentionally been wrought with poetic license. It has taken paradigms and metaphorically stretched them, compressed them, simplified them, complicated them and generally twisted, shaved, and jammed them into a holistic picture of what might exist.

The picture was then operationalized and tested. Most of it survived intact.

Somewhere along the way a seed was planted which promised fruitful

findings would bring the writer some large degree of pleasure. But what has emerged is not a bloom of self-satisfaction, but a flower that warns, "To pick me and take me home is to destroy me."

The structured fantasy approach explored here is not an end in itself. It is a very small piece to a very large puzzle. And it holds no guarantee that it is not obstructing the way of a larger more illuminating piece.

This is all to reemphasize that the structured fantasy approach to relaxing the affective gatekeeper should be considered as a metaphoric heuristic and a process rather than a static paradigm separate from the soil from which it grew.

Perhaps this parable will metaphorically explain the concern which has grown in me since this study's statistical significance first leaped triumphantly from the computer printouts into my delighted face:

"Of utmost importance," said the chief of the small village, "is the ability to travel to the port to trade our jewelry for food. Until recently, those traveling to the port simply left our village and wandered aimlessly until they either found the port or died. I am happy to annouce that thanks to the efforts of our most wise and scientific medicine man we have captured the essence of travel. All travel, he discovered, is based upon footprints. Follow the footprints exactly and you will never get lost going to or coming from port again."

"But what about the trees?" asked one villager.

"Trees are not footprints, and thus should be ignored," replied the chief.

"May we consider the stars?" questioned another.

"Don't be foolish," commanded the chief. "What could be farther from footprints than stars? Have I not already told you? There is no travel without footprints. Footprints are the essence of all travel. Understand footprints and the concept of travel is yours forever. You will never be lost again."

That was many years ago. And since that time many villagers have come and gone from the port never taking their eyes off the footprints. Some of the most scholarly villagers over the years have studied and refined footprintology, writing long and scholarly dissertations on the many things footprints show--of the many truths to be found through careful scrutiny of footprints.

Over the years the methods of observing footprints have been refined to such an exact science that many years of studying with rigorous examinations are required to truly practice and teach footprintology. In fact, before each young man is able to leave the village he must be thoroughly educated in footprintology as the essence of travel, lest someday he look at the trees or stars and lose sight of that essence that the wisest of men know as travel.

REFERENCES

REFERENCES

Barber, T. X., Spanos, N. P., & Chaves, J. F. Hypnosis, imagination, and human potentialities. New York: Pergamon Press, 1974.

Barlow, J. M. Metaphor and insight in psychotherapy. Unpublished doctoral dissertation, The University of Tennessee, 1973.

Barlow, J. M., Kerlin, J. & Pollio, H. R. Manual for the identification of figurative language. Tech. Rep. 1, Metaphor Research Group, The University of Tennessee, 1970.

Barron, F. Personality style and perceptual choice. Journal of Personality, 1952, 20, 385-401.

Barron, F. Complexity-simplicity as a personality dimension. Journal of Abnormal and Social Psychology, 1953, 48, 163-172.

Barron, F. Creativity and psychological health: Origins of personality and creative freedom. Princeton, N.J.: VanNostrand, 1963.

Barron, F., & Leary, T. To find and foster creativity. A report of the Rhode Island School of Design. Providence, Rhode Island, 1961.

Bentley, J. C. Creativity and academic achievement. Journal of Educational Research, 1966, 59, 269-272.

Bowers, P. G. Effect of hyponosis and suggestions of reduced defensiveness on creativity test performance. Journal of Personality, 1967, 35, 311-322.

Brown, G. I. A second study in the teaching of creativity. Harvard Educational Review, 1965, 35, 39-54.

Bruner, J. S. & Goodman, C. C. Value and needs as organizing factors in perception. Journal of Abnormal and Social Psychology, 1947, 42, 34.

Burchard, E. M. Use of projective techniques in analysis of creativity. Journal of Projective Techniques, 1952, 16, 412-427.

Chaplin, J. P. Dictionary of psychology. New York: Dell, 1968.

Cropley, A. J. Some Canadian creativity research. Journal of Research and Development in Education, 1971, 4, 113-115.

Cropley, A. J. A five-year longitudinal study of the validity of creativity tests. Developmental Psychology, 1972, 6, 119-124.

Davis, G. A. Instruments useful in studying creative behavior and creative talent. Journal of Creative Behavior, 1971, 5, 162-165.

Davis, G. A., & Belcher, T. L. How shall creativity be measured? Torrance tests, RAT, alpha biographical, and IQ. Journal of Creative Behavior, 1971, 5, 153-161

Davis, G. A., Helfert, C. J., & Shapior, G. R. Let's be an ice cream machine! Journal of Creative Behavior, 1973, 7, 37-48.

Davis, G. A., Peterson, J. M., & Farley, F. H. Attitudes, motivation, sensation seeking, and belief in ESP as predictors of real creative behavior. Journal of Creative Behavior, 1974, 8, 31-39.

Dellas, M. Effects of affective expression on divergent thinking production. The Journal of Psychology, 1974, 88, 325-331.

Denniston, D., & McWilliams, P. The TM book. New York: Warner Books, 1975.

Dreisdadt, R. An analysis of the use of analogies and metaphors in sciences. Journal of Psychology, 1968, 68, 97-116.

Eberle, R. F. Developing imagination through scamper. Journal of Creative Behavior, 1972, 6, 199-203.

Eberle, R. F. Does creative dramatics really square with research evidence? Journal of Creative Behavior, 1974, 8, 177-182.

Edwards, M. O. A survey of problem-solving courses. Journal of Creative Behavior, 1967, 2, 33-51.

Fine, H. J., Pollio, H. R., & Simpkinson, C. H. Figurative language, metaphor and psychotherapy. Psychotherapy: Theory, Research and Practice, 1973, 10, 87-91.

Freud, S. The origins of psychoanalysis: Letters to Wilhelm Fleiss, drafts and notes: 1887-1902. New York: Basic Books, 1954.

Freud, S. The interpretation of dreams (1900). New York: Wiley, 1961.

Fuchs-Carsch, M. E. Metaphor as a linguistic tool to facilitate creative thinking in the classroom. Unpublished doctoral dissertation, The University of Tennessee, 1971.

Fulgosi, A., & Guilford, J. P. Short-term incubation in divergent production. Journal of Creative Behavior, 1970, 4, 131-132.

Galton, F. English men of science, their nature and nurture. London: Macmillan, 1874.

Garwood, D. S. Personality factors related to creativity in young scientists. Journal of Abnormal Social Psychology, 1964, 68, 413-419.

Gordon, W. J. Synectics: The development of creative capacity. New York: Harper Bros., 1961.

Green, A. M., Green, E. E., & Walters, E. D. Psychophysiological training for creativity. Paper presented at the annual meeting of the American Psychological Association, Sept., 1971.

Green, A. M., Green, E. E., & Walters, E. D. Brainwave training, imagery, creativity, and integrative experiences. Paper presented at the Biofeedback Research Society Conference, February, 1974.

Green, E. E., Green, A. M., & Walters, E. D. Voluntary control of inner states: Psychological and physiological. In Barber, T. X., et al (Eds.), Biofeedback and self-control. Chicago: Aldine-Atherton, 1971.

Gruber, H. E., Terrell, G., & Wertheimer, M. Contemporary approaches to creative thinking. New York: Prentice-Hall, 1962.

Guilford, J. P. The nature of human intelligence. New York: McGraw-Hill, 1967.

Guilford, J. P. Intelligence, creativity and their educational implications. San Diego: Robert R. Knapp, 1968.

Guilford, J. P. Creativity: Retrospect and prospect. Journal of Creative Behavior, 1970, 4, 149-168.

Guilford, J. P. Creativity: A quarter century of progress. In I. Taylor & J. Getzels (Eds.), Perspectives in creativity. Chicago: Aldine Publishing, 1975.

Halpin, G., & Halpin, G. The effect of motivation on creative thinking abilities. Journal of Creative Behavior, 1973, 7, 51-53.

Hartman, H. Essays on ego psychology. New York: International University Press, 1964.

Haskins, J. B. How to evaluate mass communications. Advertising Research Foundation monograph, 1968.

Hastorf, A., & Cantril, H. They saw a game: A case study. Journal of Abnormal and Social Psychology, 1954, 49, 129-134.

Hersch, C. The cognitive functioning of the creative person: A developmental analysis. Journal of Projective Techniques, 1962, 26, 193-200.

Holstein, B. I. Use of metaphor to induce innovative thinking in fourth grade children. Education, 1972, 93, 56-60.

Holt, R. R. The nature of TAT stories as cognitive products: A psychoanalytic approach. In J. Kagan & A. S. Less (Eds.), Contemporary issues in thematic apperceptive methods. Springfield, Ill.: Thomas, 1961, 3-43.

Kagan, J. (Ed.). Creativity and learning. Boston: Beacon Press, 1967.

Kelly, G. The psychology of personal constructs. New York: Norton, 2 vol., 1955.

Klinger, E. Structure and functions of fantasy. New York: Wiley-Interscience, 1971.

Koestler, A. The act of creation. New York: Dell, 1964.

Kris, E. Psychoanalytic explorations in art. New York: International University Press, 1952.

Lawrence, J. Alpha brain waves. New York: Avon, 1972.

Leary, T. The effects of test score feedback on creative performance and of drugs on creative experience. In C. W. Taylor (Ed.), Widening horizons in creativity. New York: Wiley, 1964.

Lenrow, P. B. The uses of metaphor in facilitating constructive behavior change. Psychotherapy: Theory, Research, and Practice, 1966, 3, 145-148.

Lewis, H. R., & Streitfeld, H. S. Growth Games. New York: Bantam, 1972.

Lindzey, G., & Aronson, E. The handbook of social psychology. Reading, Mass.: Addison-Wesley, 5 vol., 1969.

Lockwood, B. R. Figurative language as a function of cognitive style. Unpublished doctoral dissertation, The University of Tennessee, 1974.

Ludwig, A. M. The formal characteristics of therapeutic insight. American Journal of Psychotherapy, 1966, 20, 305-318.

MacDonald, J. B., & Raths, J. D. Should we group by creative abilities. Elementary School Journal, 1964, 65, 137-142.

Mackinnon, D. W. The highly effective individual. Teachers College Record, 1960, 61, 365-378.

Mackinnon, D. W. The nature and nurture of creative talent. American Psychologist, 1962, 17, 484-495.

Mackler, B. Creativity and life style. Unpublished doctoral dissertation, University of Kansas, Lawrence, 1962.

Maddi, S. R. Motivational aspects of creativity. Journal of Personality, 33, 330-347.

May, R. (Ed.). Existential psychology. New York: Random House, 1969.

Myden, W. Interpretation and evaluation of certain personality characteristics involved in creative production. Perceptual and Motor Skills, 1959, 9, 139-158.

Nash, W. R. The effects of warm-up activities on small group divergent problem-solving with young children. Journal of Psychology, 1975, 89, 237-241.

Ornstein, R. E. The psychology of consciousness. San Francisco: W. H. Freeman, 1972.

Osborn, A. F. Applied imagination. New York: Charles Scribner's Sons, 1963.

Osgood, C. E., Suci, G. J., & Tannenbaum, P. H. The measurement of meaning. Urbana: University of Illinois Press, 1957.

Parnes, S. J. Creative behavior guidebook. New York: Charles Scribner's Sons, 1967.

Parnes, S. J. Creativity: Unlocking human potential. Buffalo, N.Y.: D.O.K., 1972.

Parnes, S. J. Creativity: Developing human potential. Journal of Creative Behavior, 1971, 5, 19-36.

Parnes, S. J., & Noller, R. B. Toward Supersanity: Channeled Freedom. Buffalo, N.Y.: D.O.K., 1973.

Parnes, S. J., & Noller, R. B. Toward Supersanity: Channeled Freedom Research Supplement. Buffalo, N.Y.: D.O.K., 1973.

Perls, F. S., Hefferlin, R. F., & Goodman, P. Gestalt Therapy. New York: Julian Press, 1951.

Pine, F., & Holt, R. R. Creativity and primary process: A study of adaptive regression. Journal of Abnormal and Social Psychology, 1960, 61, 370-379.

Pollio, M. R. Figurative language in the elementary school. Unpublished master's thesis, The University of Tennessee, 1971.

Pollio, M. R. The development and augmentation of figurative language. Unpublished doctoral dissertation, The University of Tennessee, 1973.

Porter, C. Figures of speech, divergent thinking, and activation theory. Unpublished doctoral dissertation, North Texas State University, 1969.

Prince, G. M. The operational mechanism of synectics. Journal of Creative Behavior, 1968, 2, 1-13.

Prince, G. M. The practice of creativity. New York: Harper & Row, 1970.

Roe, A. Artists and their work. Journal of Personality, 1946, 16, 1-40.

Roe, A. The making of a scientist. New York: Dodd, Mead, & Co., 1953.

Rokeach, M. Images of the consumer's mind on and off Madison Avenue. In H. H. Martin & K. E. Anderson (Eds.), Speech communication, Boston: Allyn, 1968, 256-262.

Rothbart, H. A. Cybernetic creativity. New York: Robert Speller & Sons, 1972.

Samuels, M., & Samuels, N. Seeing with the mind's eye. New York: Random House, 1975.

Seigel, S. Nonparametric statistics for the behavioral sciences. New York: McGraw-Hill, 1956.

Singer, J. L. Daydreaming: An introduction to the experimental study of inner experience. New York: Random House, 1966.

Sperry, R. Neurology and the mind-brain problem. American Scientist, 1951, 40, 291-312.

Stein, M. I. Stimulating creativity, individual procedures. New York: Academic Press, 1974.

Stein, M. I. Stimulating creativity, group procedures. New York: Academic Press, 1975.

Strom, R. D., & Larimore, D. Predicting teacher success: The inner city. Columbus, Ohio: College of Education, Ohio State University, 1970.

Synectics, Inc. Making it strange. New York: Harper & Row, 1968.

Taylor, C. Creativity: Progress and potential. New York: McGraw-Hill, 1964.

Taylor, C. W., & Barron, F. (Eds.). Scientific creativity: Its recognition and development. New York: John Wiley & Sons, 1963.

Taylor, I. A. A retrospective view of creativity investigation. In I. Taylor & J. Getzels (Eds.), Perspectives in Creativity. Chicago: Aldine, 1975, 1-36.

Taylor, I. A., Getzels, J. W. (Eds.). Perspectives in Creativity. Chicago: Aldine, 1975.

Teyler, T. J. (Ed.). Altered states of awareness: Readings from Scientific American. San Francisco: W. H. Freeman, 1971.

Torrance, E. P. Guiding creative talent. Englewood Cliffs, N.J.: Prentice-Hall, 1962.

Torrance, E. P. Education and the creative potential. Minneapolis: University of Minnesota Press, 1963.

Torrance, E. P. Rewarding creative behavior. Englewood Cliffs, N.J.: Prentice-Hall, 1965.

Torrance, E. P. Torrance tests of creative thinking, verbal. Princeton, N.J.: Personal Press, 1966.

Torrance, E. P. Prediction of adult creative achievement among high school seniors. Gifted Child Quarterly, 1969, 13, 71-81.

Torrance, E. P. Torrance tests of creative thinking directions manual and scoring guide, verbal. Lexington, Mass.: Ginn, 1974.

Torrance, E. P. Norms-technical manual, Torrance tests of creative thinking. Lexington, Mass.: Ginn, 1974(b).

Torrance, E. P. The Minnesota studies of creative behavior: National and international extensions. Journal of Creative Behavior, 1967, 1, 137-154.

Torrance, E. P. Predictive validity of the Torrance tests of creative thinking. Journal of Creative Behavior, 1972, 6, 236-252.

Torrance, E. P., & Dauw, D. C. Aspirations and dreams of three groups of creatively gifted high school seniors and comparable unselected groups. Gifted Child Quarterly, 1965, 9, 177-182.

Torrance, E. P., & Hansen, E. The question-asking behavior of highly creative and less creative basic business teachers identified by a paper-and-pencil test. Psychological Reports, 1965, 17, 815-818.

Torrance, E. P., Tan, C. A., & Allman, T. Verbal originality and teacher behavior: A predictive validity study. Journal of Teacher Education, 1970, 21, 335-341.

Treffinger, D. J., Renzulli, J. S., & Feldhusen, J. F. Problems in assessment of creative thinking. Journal of Creative Behavior, 1971, 5, 104-112.

Welsh, G. S. Perspectives in the study of creativity. Journal of Creative Behavior, 1973, 7, 231-246.

Weisberg, P. S., & Springer, K. J. Environmental factors in creative function. Archives of General Psychiatry, 1961, 5, 554-564.

Werner, H. Comparative psychology of mental development. New York: International University Press, 1957.

Wild, C. Creativity and adaptive regression. Journal of Personality and Social Psychology, 1965, 2, 161-169.

Yamamoto, K. Creative writing and school achievement. School and Society, 1963, 91, 307-308.

Yamamoto, K. Evaluation of some creativity measures in a high school with peer nominations as criteria. Journal of Psychology, 1964, 58, 285-293.

APPENDIX

NAME_____ GROUP/CLASS_____

AGE_____

DATE_____ FORM A

Activities 1-3: ASK AND GUESS

The first three activities will be based on the drawings below. These activities will give you a chance to see how good you are at asking questions to find out things that you don't know and in making guesses about possible causes and consequences of happenings. Look at the picture. What is happening? What can you tell for sure? What do you need to know to understand what is happening, what caused it to happen and what will be the result?



ACTIVITY 1. ASKING. On this page, write out all of the questions you can think of about the picture on the page opposite this one. Ask all of the questions you would need to ask to know for sure what is happening. Do not ask questions which can be answered just by looking at the drawing. You can continue to look back at the drawing as much as you want to.

1. _____

2. _____

3. _____

4. _____

5. _____

6. _____

7. _____

8. _____

9. _____

10. _____

11. _____

12. _____

13. _____

14. _____

15. _____

16. _____

17. _____

18. _____

19. _____

20. _____

21. _____

22. _____

23. _____

GO ON TO NEXT PAGE

24. _____

25. _____

26. _____

27. _____

28. _____

29. _____

30. _____

31. _____

32. _____

33. _____

34. _____

35. _____

36. _____

37. _____

38. _____

39. _____

40. _____

41. _____

42. _____

43. _____

44. _____

45. _____

46. _____

47. _____

48. _____

49. _____

50. _____

ACTIVITY 2. GUESSING CAUSES: In the spaces below, list as many possible causes as you can of the action shown in the picture on page 2. You may use things that might have happened just before the things that are happening in the picture, or something that happened a long time ago that made these things happen. Make as many guesses as you can. Don't be afraid to guess.

1. _____

2. _____

3. _____

4. _____

5. _____

6. _____

7. _____

8. _____

9. _____

10. _____

11. _____

12. _____

13. _____

14. _____

15. _____

16. _____

17. _____

18. _____

19. _____

20. _____

21. _____

22. _____

23. _____

GO ON TO NEXT PAGE

24. _____

25. _____

26. _____

27. _____

28. _____

29. _____

30. _____

31. _____

32. _____

33. _____

34. _____

35. _____

36. _____

37. _____

38. _____

39. _____

40. _____

41. _____

42. _____

43. _____

44. _____

45. _____

46. _____

47. _____

48. _____

49. _____

50. _____

ACTIVITY 3. GUESSING CONSEQUENCES: In the spaces below, list as many possibilities as you can of what happens as a result of what is taking place in the picture on page 2. You may use things that might happen right afterwards or things that might happen as a result long afterwards in the future. Make as many guesses as you can. Don't be afraid to guess.

1. _____

2. _____

3. _____

4. _____

5. _____

6. _____

7. _____

8. _____

9. _____

10. _____

11. _____

12. _____

13. _____

14. _____

15. _____

16. _____

17. _____

18. _____

19. _____

20. _____

21. _____

22. _____

23. _____

24. _____

25. _____

Activity 4: PRODUCT IMPROVEMENT

In the middle of this page is a sketch of a stuffed toy elephant of the kind you can buy in most dime stores for about one or two dollars. It is about six inches tall and weighs about a half pound. In the spaces on this page and the next one, list the cleverest, most interesting and unusual ways you can think of for changing this toy elephant so that children will have more fun playing with it. Do not worry about how much the change would cost. Think only about what would make it more fun to play with as a toy.



1. _____

2. _____

3. _____

4. _____

5. _____

6.
7.
8.
9.
10.
11.
12.
13.
14.
15.
16.
17.
18.
19.
20.
21.
22.
23.
24.
25.
26.
27.
28.
29.
30.
31.
32.

ACTIVITY 5: UNUSUAL USES (Cardboard Boxes)

Most people throw their empty cardboard boxes away, but they have thousands of interesting and unusual uses. In the spaces below and on the next page, list as many of these interesting and unusual uses as you can think of. Do not limit yourself to any one size of box. You may use as many boxes as you like. Do not limit yourself to the uses you have seen or heard about; think about as many possible new uses as you can.

1. _____

2. _____

3. _____

4. _____

5. _____

6. _____

7. _____

8. _____

9. _____

10. _____

11. _____

12. _____

13. _____

14. _____

15. _____

16. _____

17. _____

18. _____

19. _____

20. _____

21. _____

22. _____

23. _____

24. _____

25. _____

26. _____

27. _____

28. _____

29. _____

30. _____

31. _____

32. _____

33. _____

34. _____

35. _____

36. _____

37. _____

38. _____

39. _____

40. _____

41. _____

42. _____

43. _____

44. _____

45. _____

46. _____

47. _____

48. _____

49. _____

50. _____

NAME_____ GROUP/CLASS_____

AGE_____

DATE_____

FORM B

ACTIVITIES 1-3: ASK-AND-GUESS

The first three activities will be based on the drawing below. These activities will give you a chance to see how good you are at asking questions to find out things that you don't know and in making guesses about possible causes and consequences of happenings. Look at the picture. What is happening? What can you tell for sure? What do you need to know to understand what is happening, what caused it to happen and what will be the result?



ACTIVITY 1. ASKING. On this page, write out all of the questions you can think of about the picture on the page opposite this one. Ask all of the questions you would need to ask to know for sure what is happening. Do not ask questions which can be answered just by looking at the drawing. You can continue to look back at the drawing as much as you want to.

1. _____

2. _____

3. _____

4. _____

5. _____

6. _____

7. _____

8. _____

9. _____

10. _____

11. _____

12. _____

13. _____

14. _____

15. _____

16. _____

17. _____

18. _____

19. _____

20. _____

21. _____

22. _____

23. _____

GO ON TO NEXT PAGE

24. _____

25. _____

26. _____

27. _____

28. _____

29. _____

30. _____

31. _____

32. _____

33. _____

34. _____

35. _____

36. _____

37. _____

38. _____

39. _____

40. _____

41. _____

42. _____

43. _____

44. _____

45. _____

46. _____

47. _____

48. _____

49. _____

50. _____

ACTIVITY 2. GUESSING CAUSES: In the spaces below, list as many possible causes as you can of the action shown in the picture on page 2. You may use things that might have happened just before the things that are happening in the picture, or something that happened a long time ago that made these things happen. Make as many guesses as you can. Don't be afraid to guess.

1. _____

2. _____

3. _____

4. _____

5. _____

6. _____

7. _____

8. _____

9. _____

10. _____

11. _____

12. _____

13. _____

14. _____

15. _____

16. _____

17. _____

18. _____

19. _____

20. _____

21. _____

22. _____

23. _____

GO ON TO NEXT PAGE

24. _____

25. _____

26. _____

27. _____

28. _____

29. _____

30. _____

31. _____

32. _____

33. _____

34. _____

35. _____

36. _____

37. _____

38. _____

39. _____

40. _____

41. _____

42. _____

43. _____

44. _____

45. _____

46. _____

47. _____

48. _____

49. _____

50. _____

ACTIVITY 3. GUESSING CONSEQUENCES: In the spaces below, list as many possibilities as you can of what might happen as a result of what is taking place in the picture on page 2. You may use things that might happen right afterwards or things that might happen as a result long afterwards in the future. Make as many guesses as you can. Don't be afraid to guess.

1. _____

2. _____

3. _____

4. _____

5. _____

6. _____

7. _____

8. _____

9. _____

10. _____

11. _____

12. _____

13. _____

14. _____

15. _____

16. _____

17. _____

18. _____

19. _____

20. _____

21. _____

22. _____

23. _____

24. _____

25. _____

ACTIVITY 4: PRODUCT IMPROVEMENT

In the middle of this page is a sketch of a stuffed toy monkey of the kind you can buy in most dime stores for about one to two dollars. It is about six inches tall and weighs about six ounces. In the spaces on this page and the next one, list the cleverest, most interesting and unusual ways you can think of for changing this toy monkey so that children will have more fun playing with it. Do not worry about how much the change would cost. Think only about what would make it more fun to play with as a toy.

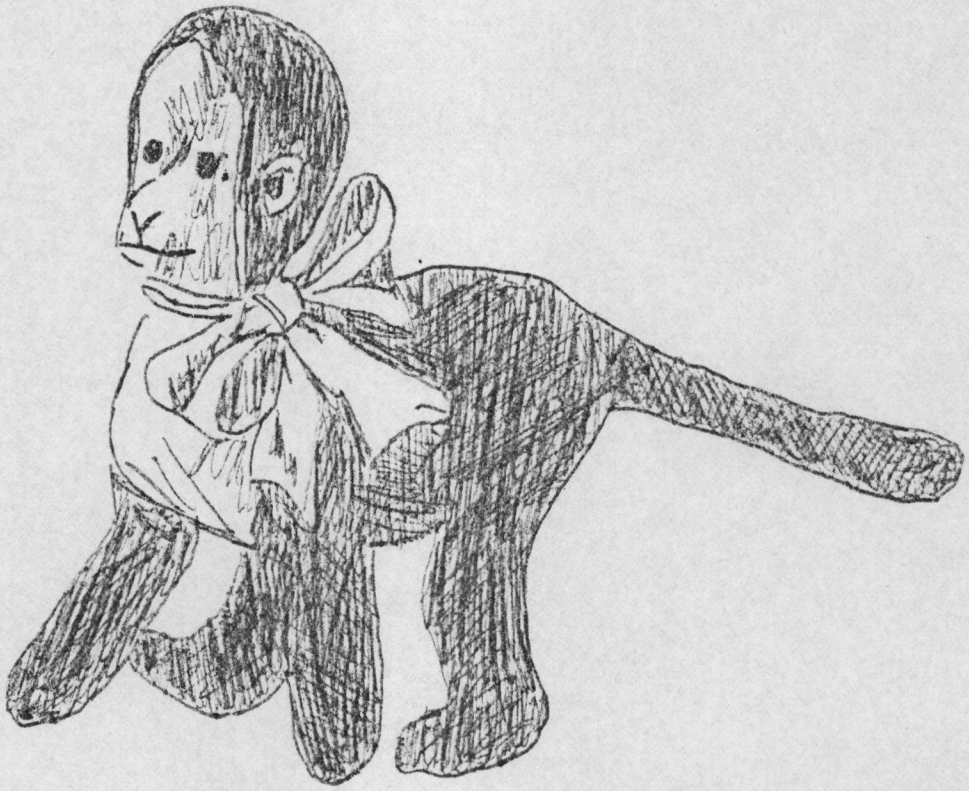

1. _____

2. _____

3. _____

4. _____

5. _____

6. _____

7. _____

8. _____

9. _____

10. _____

11. _____

12. _____

13. _____

14. _____

15. _____

16. _____

17. _____

18. _____

19. _____

20. _____

21. _____

22. _____

23. _____

24. _____

25. _____

26. _____

27. _____

28. _____

29. _____

30. _____

31. _____

32. _____

ACTIVITY 5: UNUSUAL USES (Time Cans)

Most people throw their tin cans away, but they have thousands of interesting and unusual uses. In the spaces below and on the next page, list as many of these interesting and unusual uses as you can think of. Do not limit yourself to any one size of can. You may use as many cans as you like. Do not limit yourself to the uses you have seen or heard about; think about as many possible new uses as you can.

1. _____

2. _____

3. _____

4. _____

5. _____

6. _____

7. _____

8. _____

9. _____

10. _____

11. _____

12. _____

13. _____

14. _____

15. _____

16. _____

17. _____

18. _____

19. _____

20. _____

21. _____

22. _____

23. _____

24. _____

25. _____

26. _____

27. _____

28. _____

29. _____

30. _____

31. _____

32. _____

33. _____

34. _____

35. _____

36. _____

37. _____

38. _____

39. _____

40. _____

41. _____

42. _____

43. _____

44. _____

45. _____

46. _____

47. _____

48. _____

49. _____

50. _____

VITA

Daniel Slade Bagley III was born in Roanoke, Virginia, on September 10, 1945. He attended kindergarten through the twelfth grade in Lakeland, Florida, and was graduated from Lakeland High School in May, 1963. He attended Florida State University in Tallahassee, and in April, 1967, was graduated with a Bachelor of Science degree in Advertising and Public Relations from the School of Business.

From September, 1967, until June, 1968, he taught fifth grade at Combee Elementary School in Lakeland, Florida. In July, 1968, he was directly commissioned into the Army Medical Service Corps as a second lieutenant. He was honorably discharged from the Army in July, 1971, at the rank of captain, having served most of his three years as a hospital administrator in Zama Army Hospital, Japan. During his time in Japan he earned the Masters of Business Administration degree in night school through an extension program offered by the University of Hawaii at Tachekawa Air Force Base, Japan.

From July, 1971, to June, 1974, he worked for Bagley Specialty Advertising in Lakeland, Florida, as Vice President and Sales Manager. In June, 1973, he married Ann Hero. During those years in Lakeland his public service included membership on the Mayor's Blue Ribbon Fact Finding Committee on Racial Tension, the Board of Directors of the American Red Cross, the Board of Directors of the First United Methodist Church, membership in Rotary International, and the presidency of the Lakeland Executive Club.

In June, 1974, he and his wife Ann moved to Knoxville to begin doctoral programs at The University of Tennessee. From September, 1974,

through August, 1975, he was a graduate assistant in the Department of Advertising. The following year he was a teaching assistant in that department. In Spring, 1975, he was awarded a Kleid Collegiate Direct Mail Institute scholarship. In December, 1975, he began writing a monthly column for The Counselor, a specialty advertising industry trade publication and was subsequently designated a contributing editor. In Spring, 1976, he was given The University of Tennessee College of Communications Outstanding Graduate Student Award. He also won the first place award for graduate student papers on advertising from the Association for Education of Journalism.

In July, 1976, his son, Andrew Slade was born.

From September, 1976, through August, 1977, Bagley was an instructor in the College of Communications Department of Journalism. He received the Doctor of Philosophy degree in Communications in August, 1977. He holds membership in Beta Gamma Sigma, Kappa Tau Alpha, and Phi Kappa Phi.