Extraction of Thorium Dioxide and other REE Oxides from Monazite Ore

CBE 488: Honors Design in Green Engineering

Brad Bennett
Chelsea Connolly-Horton
Kelsey Hay
Julia Johnson

Submitted:
April 26, 2019

Chemical and Biomolecular Engineering Department
University of Tennessee
1331 Circle Park Drive SW, Knoxville, TN, 37916

Table of Contents

1.0 Introduction *2*

2.0 Synthesis Information for Processes *4*

2.1 Overall Process Design **4**

2.2 Process Chemistry **4**

2.3 Literature Summary **6**

2.4 Relevant Properties **6**

3.0 Methods of Approach *7*

4.0 Results *7*

4.1 Project Assumptions **7**

4.2 Process Flow Diagram **8**

4.3 Process Operation **11**

4.4 Monazite Input 12

4.5 Product Output **14**

4.6 Optimization **15**

Optimizing the Process Flow Diagram 16

Optimizing the Economic Performance and Hazard Minimization 17

4.7 Safety, Health and Environment Analysis **18**

4.8 Process Economics **20**

4.9 Capital Cost Estimates **22**

4.10 Manufacturing Cost Estimates **25**

5.0 Discussion of Results *25*

6.0 Conclusions *27*

7.0 Recommendations *28*

8.0 References *29*

Appendix A: Sample Calculations for Equipment Costing *30*

Appendix B: Calculations for Utility Costs *34*

1.0 Introduction

The scope of this manuscript details the proposal of a process design intended for the extraction of Thorium dioxide and other rare earth element oxides from a monazite ore source. As rare earth elements (REEs) are becoming increasingly critical to manufacturing processes across industries, extraction and purification techniques to collect these compounds from dilute source compositions has become an increasingly important field of research. Monazite is a classification of a type of mineral deposit that is rich in desired REE compounds. For this investigation, a monazite composition shown in Table 1.1 was used.

Table 1.1: Monazite Composition

Compound	Mass %
La_2O_3	16.64
Ce_2O_3	33.52
ThO_2	5.4
P_2O_5	29
Nd_2O_3	13.75
SiO_2	1.55
U_3O_8	0.15
Total	**100**

Looking at the research being conducted in this field, the literature commonly cited two different fundamental approaches. The first used a basis of an alkali processing framework with ammonium hydroxide and sodium hydroxide being the most common components for the initial digestion of monazite ore. The second used an acidic framework with sulfuric acid being the primary solvent for the initial processing steps. This manuscript details a process design using the acidic framework with sulfuric acid as the primary solvent in the initial processing steps, expanding upon the proposal put forth by Rodliyah et al (2015).

By using sulfuric acid in the initial step in this process framework, many of the REE compounds in the monazite ore were initially converted from phosphates to sulfates. Following the leaching process, ammonium hydroxide was used to convert thorium sulfate to thorium dioxide. This precipitated product was filtered to produce a stream primarily comprised of thorium dioxide and silicon oxide. The liquid stream

contained the majority of other REE compounds. Additional processing was necessary for further conversion of uranium, cerium, lanthanum, and neodymium to a precipitated sulfate form. Separation of these other REE compounds was accomplished by utilizing the range of conditions needed to precipitate the REE sulfates out of solution. Once in a sulfate compound, sodium hydroxide was the primary solvent used to further process the sulfates to an oxide or hydroxide salt. Hydroxide compounds were then processed in calciners to convert to an oxide form. Oxides were chosen as the desired end products for the basis of greater chemical stability in storage and simplified transportation requirements when shipping product.

This process design aimed to offer a financially viable option for the extraction and purification of these REE compounds from monazite. In designing this proposal, a basis feed of 1000 kilograms of monazite per hour laid the groundwork for all other processing and design calculations. The processing and purification of the various REE compounds from monazite was dictated by product output, safety and environmental concerns, but also economic performance from proposed plant. The products are purified to produce the maximum economic return possible within reasonable capital expenditures for processing equipment. In generating the cost estimations for the needed processing equipment, the ChE Index of 616 from December of 2018 was used. This manuscript proposes a viable assessment of the chemical and economic feasibility of a new processing plant with the intended goal of isolating rare earth element compounds.

In the following report, details of the design process are presented. OLI Flowsheet was used to generate models of processing steps and produce approximate operating conditions. From these conditions and stream volumes required in the models, equipment sizing and cost analysis have been conducted to produce an economic assessment for the plant start-up process. An overall economic analysis was also conducted to assess the profitability of the plant based when accounting for capital investments, operational expenses, material purchasing, utility costs, and current-market value price estimates for the produced REE compounds.

2.0 Synthesis Information for Processes

2.1 Overall Process Design

The initial processing constraints were the target throughput of 1000 kg of monazite ore per hour and the given monazite composition shown in Table 1.1. Based on these processing constraints, all other processing conditions and equipment specifications were calculated. Solvent amounts were developed through the OLI flowsheet simulation based on the calculated aqueous equilibria results for the reactions involved. The primary solvents used were H_2SO_4, HCl, NH_4OH, and NaOH. Using these solvents, solid-liquid product precipitations were the primary method for isolating and purifying the various REE compounds. Optimized reaction conditions were used to produce high-purity products based on the equilibria states in each reactor.

The process was examined from an economic perspective to identify impractical processing conditions and equipment costs. Safety and best manufacturing practices were also taken into account at this phase, and the design was further modified and optimized to produce subsequent process designs that exhibited higher economic viability with safer operating conditions and reduced waste contamination. This iterative process of assessing production quality against risk management, environmental responsibility, and optimized economic performance resulted in the final design presented in this report.

2.2 Process Chemistry

The process chemistry used throughout this plant design was based primarily on purifications achieved through solid-liquid phase separations. The desired final products were precipitated from process streams as either oxides or hydroxides. Oxide products, including thorium, silicon, and uranium, finished the process ready for shipment as a final product. Lanthanum, cerium, and neodymium each exited the process as hydroxide precipitants that were then passed to calciners for conversion to a final oxide

form. From the OLI flowsheet simulation, these were the primary reactions that take place in the processing steps for monazite:

Table 2.2: Primary Reactions

Equipment	Reaction
R-100	$ThO_2 + 2H_2SO_4 \rightarrow Th(SO_4)_2 + 2H_2O$
R-101	$Th(SO_4)_2 + NH_4OH \rightarrow ThO_2 + NH_3 + 2SO_3 + H_2O$
R-201	$U(SO_4)_2 + 2NH_4OH \rightarrow UO_2 + 2NH_3 + 2SO_3 + 2H_2O$
R-300	$2CePO_4 + 3H_2SO_4 \rightarrow Ce_2(SO_4)_3 + 2H_3PO_4$ $2LaPO_4 + 3H_2SO_4 \rightarrow La_2(SO_4)_3 + 2H_3PO_4$
R-301	$NdPO_4 + H_2SO_4 + H_2O \rightarrow NdSO_4^{+1} + H_3PO_4 + OH^-$
R-401	$NdSO_4^{+1} + H_3PO_4 + 2H_2O + NH_4OH \rightarrow NdPO_4 \cdot 2H_2O + NH_4^{+1} + SO_3 + 2H_2O$
R-402	$NdPO_4 \cdot 2H_2O + 3NaOH \rightarrow Nd(OH)_3 + Na_3PO_4 + 2H_2O$
R-502	$Ce_2(SO_4)_3 + 6NaOH \rightarrow 2Ce(OH)_3 + 3Na_2SO_4$
R-504	$Ce_2O_3 + 3NH_4OH \rightarrow 2Ce(OH)_3 + 3NH_3$
R-601	$La_2(SO_4)_3 + 6NH_4OH \rightarrow 2La(OH)_3 + 3SO_3 + 6NH_3 + 3H_2O$

The primary solvents used to achieve solid-liquid separations are H_2SO_4, HCl, NH_4OH, and NaOH. With the exception of silicon dioxide, each rare earth element can be precipitated as a sulfate. Reaction conditions provide a stratification in the solubility and equilibrium states that allows for the isolation of the various REE sulfate compounds. Following the conversion to a sulfate, the REEs were then reacted with either NH_4OH or NaOH to precipitate the oxide or hydroxide form of each respective rare earth element. In the case of silicon dioxide, this compound precipitates with thorium sulfate in Reactor-100. Thorium is converted to an oxide through a reaction with ammonium hydroxide in Reactor-101 and precipitated as a final product. The basic environment in this reactor was also used to dissolve silicon dioxide, creating an efficient solid-liquid separation between these products. Silicon dioxide is then re-precipitated by neutralizing the excess NH_4OH with H_2SO_4. Every other REE separation is dependent upon similar sulfate precipitations followed by conversion to a hydroxide or oxide form. These separations were similarly carried out based on reactor conditions.

2.3 Literature Summary

Throughout the research of the supplementary material it seems very prevalent why the thorium is the desired substance retrieved from the processing of the REEs. According to the World Nuclear association thorium is three times more abundant than uranium which makes this element so desirable. Thorium can be used in nuclear power and as the current state of earth and the fact that human capacity increasing it seems as through nuclear power is the path that should be taken next, thus new research is going into the processing of REEs. The process that was chosen for this specific research was utilizing an acid when processing the original separation. This particular strategy was implemented because most of the research done on the processing of REEs was simulated using acids instead of a base, example being "Extraction of Rare Earth Metals From Monazite Mineral Using Acid Method" by Rodliyah which acid was the most efficient way of separating the original material. The reactors in most of the sources required extremely high temperatures, this was referenced, but not utilized after further evaluation using the simulations in OLI the reactors could be ran at a lower temperature increasing plant profitability. For the pricing and functions of the plant the *Chemical Engineering Process Design and Economics A Practical Guide*, was reference heavily. This resource allowed for the proper materials needs for the reactors as well as a guide for sizing of the reactors. It also allowed for the specifics of the plant such as the amount of workers needed and the annual cost estimate of labor. Through the combination of the sources listed, the use of software (OLI and Microsoft Office) and the trial/ error of engineering knowledge obtained through research the process was extremely successful.

2.4 Relevant Properties

Calculation packages and span of operating conditions used in OLI Flowsheet are shown in Table 2.4.

Table 2.4: OLI Flowsheet Properties

Thermodynamic Framework	Aqueous (H + ion)
Temperature Span (℃)	-30.0℃ - 295.0℃
Pressure Span	1.0 atm - 35.0 atm

3.0 Methods of Approach

In approaching the challenge of separating and purifying rare earth elements from monazite ore, an iterative optimization approach has been taken. OLI Flowsheet was used to first investigate the requirements needed to chemically separate each of the REE components. From OLI, processing conditions were established, and separation points were chosen. Following the optimization process within the OLI software, the reaction scheme and processing conditions were evaluated from a safety and economic perspective. At this stage, hazardous processing conditions were identified, and processing equipment was assessed on a cost basis. With the major pain points in the process design identified from a risk assessment and costing perspective, the OLI flowsheet was further redesigned to alleviate stresses in the process scheme. Following the redesign stage, the process was again assessed for safety and economic concerns taking into account the updated alterations. This iterative process was repeated until the final design exhibited reasonable operating conditions that minimized processing and waste hazards, maximized economic performance of the facility, and achieved the highest product purity standards within the design constraints. The final design operates to achieve each of these objectives with optimized performance.

4.0 Results

4.1 Project Assumptions

Throughout the conception of the project, the following assumptions were taken into account:

- Monazite composition exhibits consistency in rare earth element composition
- Plant throughput of 1000 kg/hr
- OLI Flowsheet used to determine reaction products, reaction conversions, and operating conditions
- Equipment costing based on a ChE December 2018 Index value of 616
- Filtration systems provide full separation between precipitants and excess solvents
- Operating expenses and product production based on continuous (24/7) processing for a total of 48 weeks per year
- Product pricing constant for lifespan of the operations
- Small lag time between the completion of plant construction, operational startup, and the generation of cash flow

4.2 Process Flow Diagram

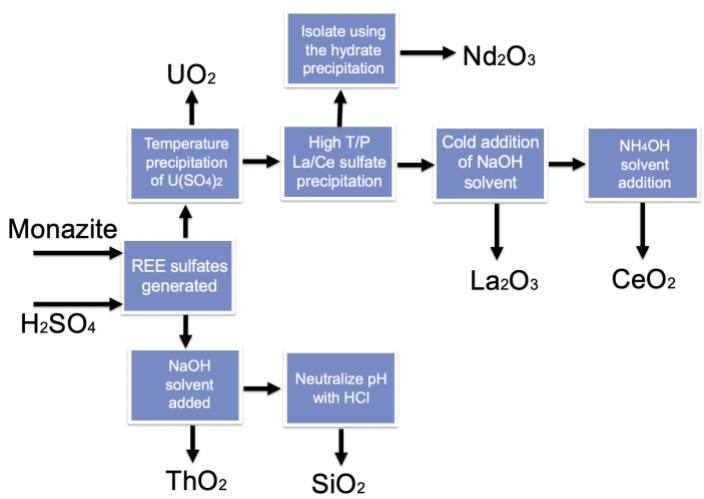

Figure 4.1: General Block Flow Diagram

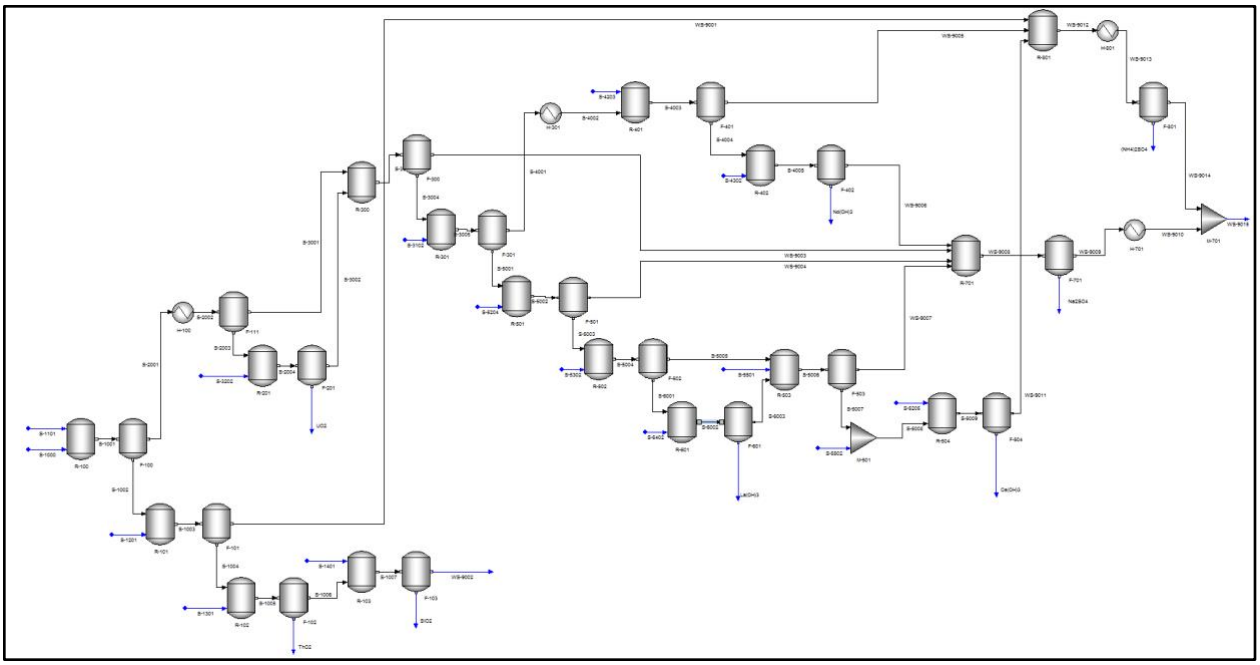

Figure 4.2: Overall Process Flow Diagram

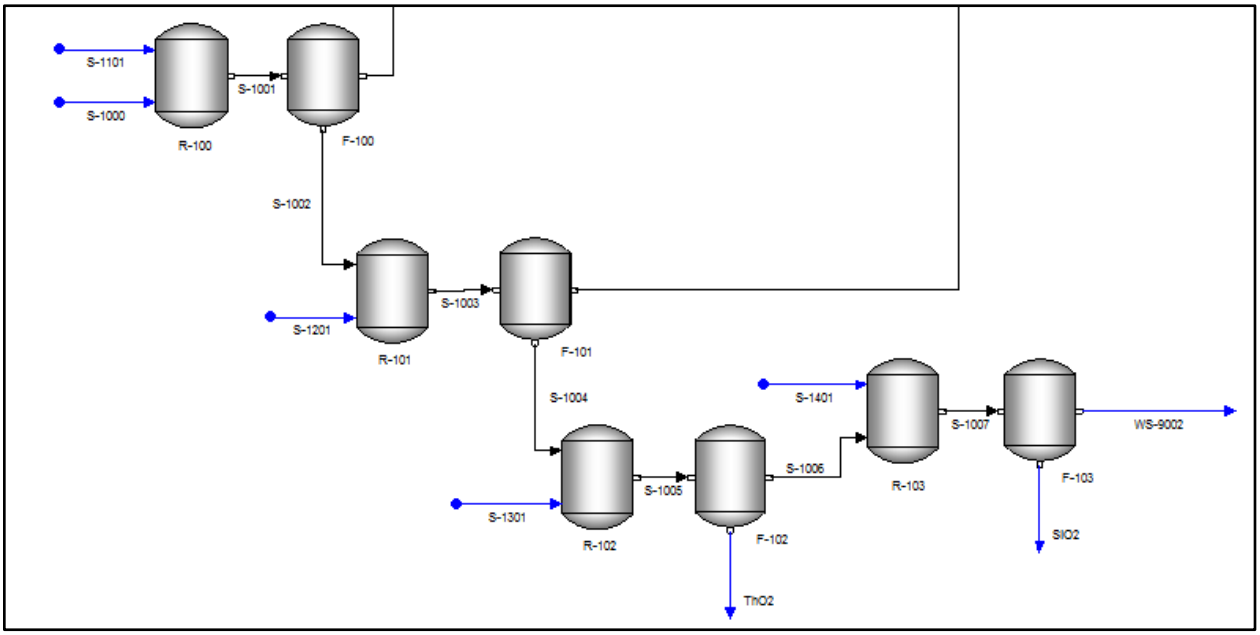

Figure 4.3: Thorium and Silicon Separation

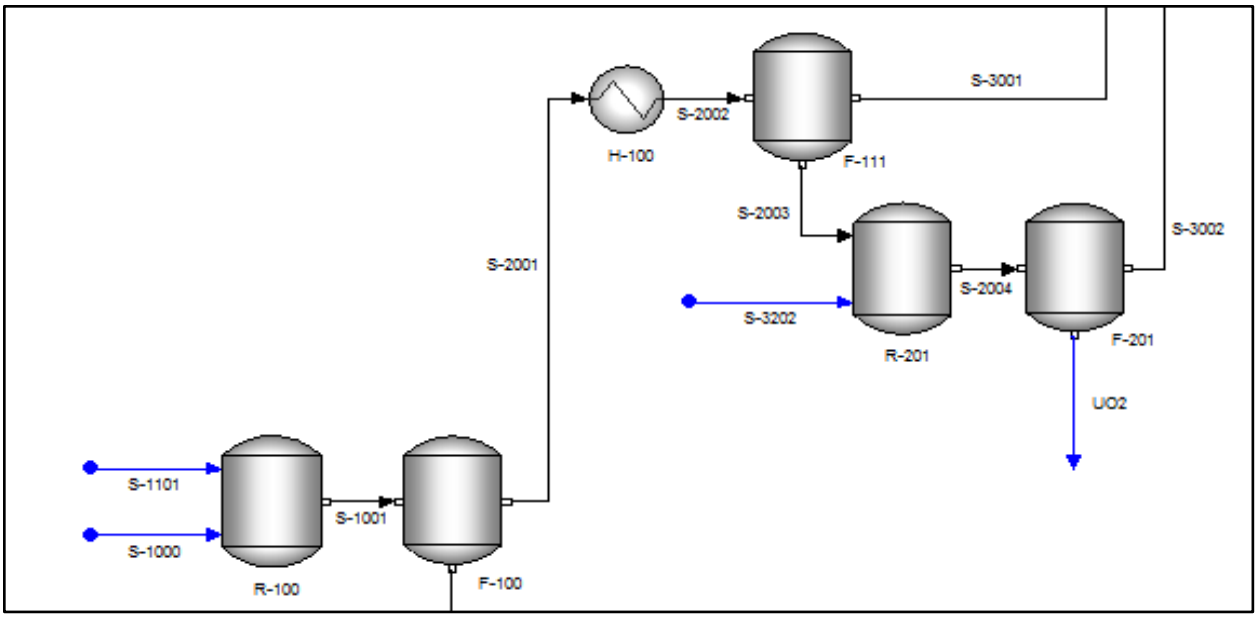

Figure 4.4: Uranium Separation

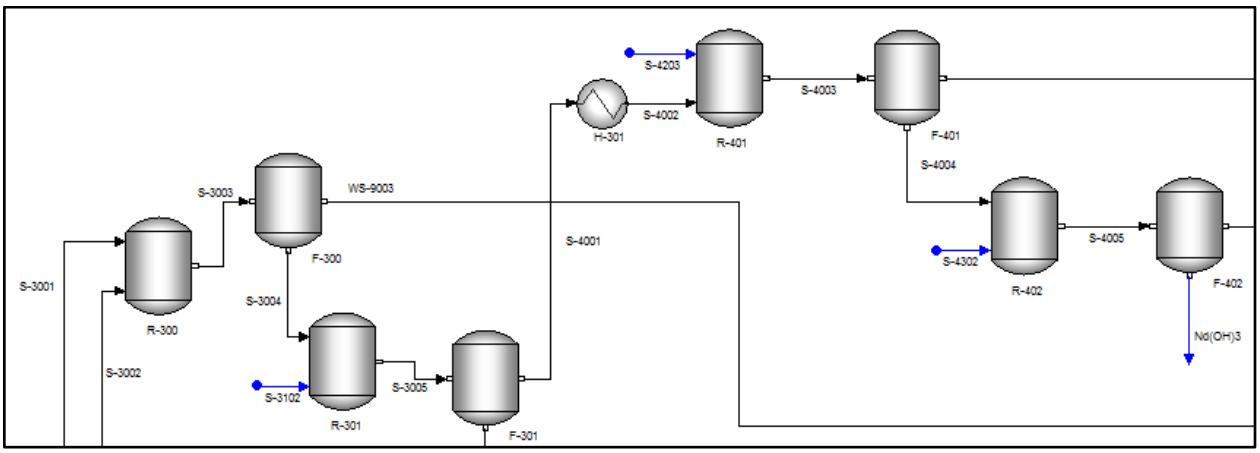

Figure 4.5: Neodymium Separation

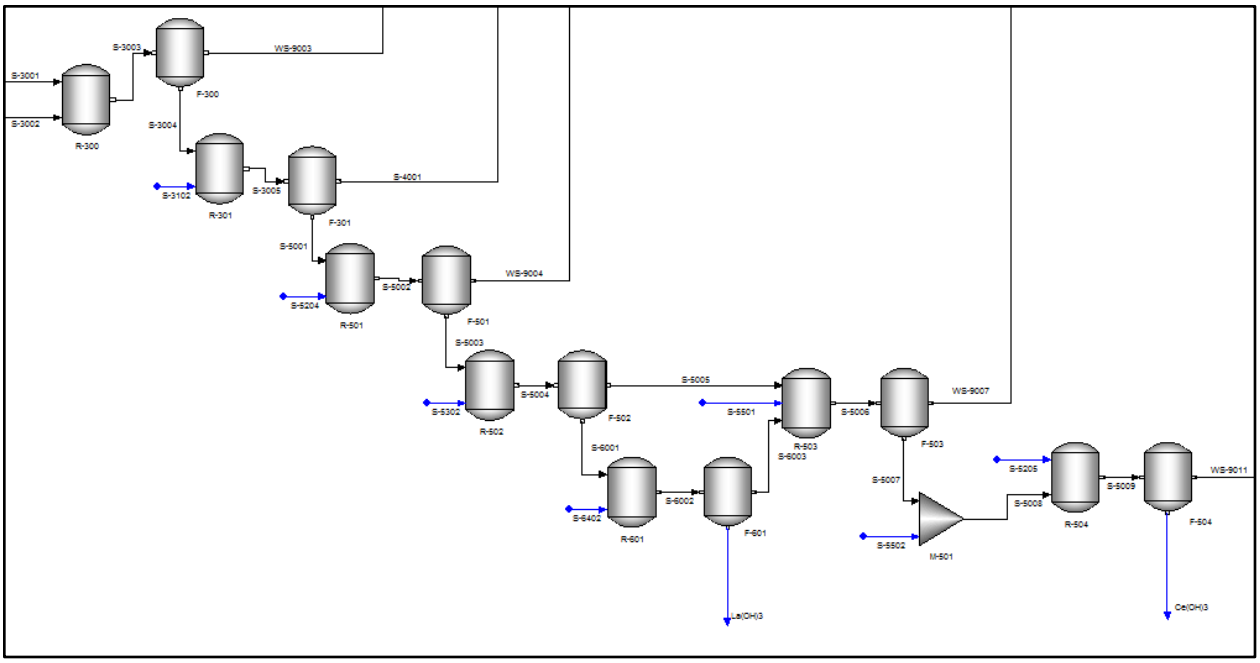

Figure 4.6: Cerium and Lanthanum Separation

4.3 Process Operation

OLI Flowsheet offered the basis for the process design through the simulation software capabilities that specialize in calculating aqueous equilibrium with multiple chemical species present. However, there were some limitations presented by OLI Flowsheet that could not accurately be reflected in the flowsheet diagram.

The first was the filtration system. The filtration technique chosen operates by vacuum filtration. The process stream would be pumped into the filtration tank where a grating support features a sheet of teflon filter paper elevated above the bottom of the tank. A vacuum would then be pulled in the bottom of the tank, causing the solvent solution to be removed from the precipitated product deposited on the filter paper from the preceding reactor. The solvent and remaining components in solution can then be pumped to the next stage of the process. Following the removal of the solvent solution, the precipitated solid would be resuspended using fresh process water. This process would be done with the assistance of an agitator assembled on the upper side of the grating. Once the solid precipitate is resuspended, it is then ready to be pumped forward in the process, and the filtration process can begin again.

This choice of filter system operated in a batch setup. However, the other components in the plant operate under the assumption of a continuous process. To unite these two approaches into a single process, holding tanks would be placed on the leading side of each filter so that reactors can run continuously while the filtration system continues to operate in batch. The holding tanks have been costed with the assumption of 12 hours of process capacity, giving them extra capacity to prevent overflow in the event of a delay. With these measures in place, this process design would operate most closely to a semi-batch process.

The second feature not accounted for in OLI was the presence of calciners. Neodymium, cerium, and lanthanum each exited the OLI process as hydroxides. Calciners were required as the final step of the conversion to the final oxide product. While not in the OLI equipment library, calciners were sized and accounted for in the capital expenses for the initial investment in the construction of the plant as well as the operating utility expenses. Only 3 calciners were required for this process since thorium, uranium and silicon each exit the process directly in an oxide form.

A third feature that was also not shown in the OLI flowsheet were the pumps required throughout the process. Each line moving across a neutral pressure change or to a higher pressure piece of equipment, as was the case with many of the reactors, was fitted with a pump with calculations to handle the volumetric flow rate of the stream in question. The pumps were also accounted for in both the capital expenses and operating expenses. These calculations also included a 10% power safety factor to ensure the pumps would be able to handle the load required for each stream. 52 total pumps were designed for placement throughout this process design.

4.4 Monazite Input

From this process design, the assumptions stated in section 4.1, and the conversion of the monazite composition shown in Table 1.1 into phosphate compounds to be used in the OLI simulation, the net input of monazite into the process is shown in Table 4.3:

Table 4.3: Monazite Feed Input

Compound	Feed (mol/hr)	Feed (kg/hr)
LaPO4	1021.45	241.98
CePO4	2042.42	480.15
ThO2	204.52	54.00
NdPO4	817.29	195.51
SiO2	257.97	15.50
U3(PO4)4	1.78	1.95
Total		**989.08**

A total of 989.08 kg/hr was calculated based on the molar conversion of each REE compound in the monazite composition to a phosphate form using the P_2O_5 content specified. However, thorium and silicon were not fed as phosphates as a result of OLI Flowsheet not having phosphate compounds of these elements available in the chemistry library in the software platform. As a result, thorium and silicon were both fed as oxides. Without having thorium phosphate accounted for in the feed calculations, the total of 989.08 kg/hr was reached rather than the target of 1000 kg/hr. With thorium factored in as a phosphate component, the net feed would be 1002.1 kg/hr as a result in the differences of molecular weight between thorium dioxide (264.04 g/mol) and thorium phosphate (327.012 g/mol). With this difference in mind, the feed basis of 989.08 kg/hr was an adjustment made for the practicality of running the simulation while also adhering to the assumed feed basis of 1000 kg/hr.

Silicon has a high probability of being the only component to exist as an oxide in mined monazite ore, so the use of silicon dioxide in the simulation was an appropriate starting compound for the silicon feed.

This conversion to phosphate components from the raw monazite composition was necessary for simulating the process in OLI as the majority of REE components from monazite would exist in phosphate forms when mined in a real application. Additionally, the conversion to phosphates allowed the simulation to process the reaction to sulfates more accurately as the compounds involved more closely resemble a real-world monazite feed.

4.5 Product Output

On the basis of using the feed input described in Table 4.3 and with the assumption of plant operation occurring 24 hours per day, 7 days per week, and 48 weeks per year along with the other assumptions from section 4.1, the process as designed and simulated in OLI demonstrated an output of products shown in Table 4.4.

Table 4.4: Product Output

Compound	M.W.	Total (mol/hr)	Total (kg/hr)	Total (kg/yr)	Stream Purity
ThO2	264.04	179.14	47.30	381,426.08	100.0%
UO2	270.03	4.62	1.25	10,050.77	100.0%
SiO2	60.08	222.39	13.36	107,745.13	100.0%
La2O3	325.81	438.77	142.95	1,152,781.25	99.989%
Ce2O3	172.115	878.47	151.20	1,219,259.58	99.995%
Nd2O3	336.48	343.82	115.69	932,913.85	99.999%
Na2SO4	142.042	777.71	110.47	890,806.35	95.055%
(NH4)2SO4	132.14	196.20	25.93	209,068.33	99.990%

Products of neodymium, cerium, and lanthanum each exited the simulation as hydroxide compounds and were then converted to oxides on a molar basis manually assuming processing through calciners. This step was required since OLI Flowsheet does not exhibit a calciner processing model in the software package. With this conversion to oxides, the additional assumption was made that the conversion was complete and the total amount of product fed to the calciners was recovered. Table 4.4 reflects the assumptions and additional processing step needed for the complete conversion of neodymium, lanthanum, and cerium products into the final oxide target. With these additional requirements addressed, Table 4.4 accurately represents the product output from this process design.

In shifting to now discuss the product purity, a major assumption that was made included the complete separation of solvents and precipitated solids in the filtration systems in the OLI simulation. This assumption was the primary factor in the product stream purities being close to 100%.

While stream purity is high, this purity level does not imply complete recovery of each product based on the total amount of the component fed to the process. Complete recovery was not achieved since the simulated equilibrium states in each reactor did not achieve a full reaction conversion. Conversions could be improved to yield a higher recovery of product, however, more extreme operating conditions would be needed in addition to a higher input rate of solvents into the process. In evaluating this design, the balance between product recovery and safe operating conditions played a role in moderating the temperatures and pressures used throughout the process where possible. Additionally, operating conditions were an important factor in the economic assessment of the plant, primarily in the equipment design phase. Costs to purchase and operate equipment at extreme conditions grew extensively in the economic analysis for the design, causing economics to be an additional factor in support of the reduction of processing conditions to manageable levels. In working this phase of the design process, the challenge of balancing product output and feasible operating conditions with economic viability was overcome by optimizing each of these pieces of the process to create a cohesive overall design.

4.6 Optimization

In designing this flowsheet, optimization was used on an iterative basis to maximize the target results of product purity, economic performance, and hazard minimization. The process design was first created to maximize product purity to produce ideal results on the basis of the final product output. The design was then examined to assess economic viability and processing hazards. In this step of the assessment, economic impracticalities with respect to equipment cost and operating conditions as well as processing hazards that posed significant risk to operational staff or the surrounding community and environment were identified. The identified challenges were then redesigned in the flow sheet layout and processing scheme to mitigate these hazards and high costs. The changes were then assessed again on the same product purity, economic output, and risk management standards. This process was iterated until the design met feasible standards for economic performance, product purity, and operational safety.

Optimizing the Process Flow Diagram

When approaching the challenge of creating a process flow diagram for the extraction of REE compounds from monazite, the provided design constraints were examined first. For this design, processing decisions were made given the initial feed rate assumption of 1000 kg of monazite per hour. This constraint became the leading factor for assessing flow rates, equipment sizing, and potential product outputs. When initially designing the flow sheet, equipment cost and operating hazards were not accounted for in the design. The primary focus in the first design was to maximize the product purity and output by exploring different options for operating conditions, compound separations schemes, and solvent usages. Reactor conditions were optimized to drive the desired reaction as close to completion as possible while still minimizing side reactions and unwanted byproducts.

Optimizing the reactor conditions in the OLI software was done through an iterative process. Reaction conditions were altered to assess low temperature, low pressure conditions as well as high temperature, high pressure conditions in an isothermal and isobaric reactor simulation. The operating conditions were then modified based on an increase in the desired product output. The method most commonly used for altering these settings in OLI Flowsheet was the bisection iteration approach. Parameters were optimized to generate the best product output to within 5 degrees Celsius of the optimal temperature and to the lowest acceptable pressure that would cause the simulation to converge.

Solvents were chosen from literature references. The most common acid used in this process is H_2SO_4 with HCl also used in the Lanthanum purification procedure. The bases of choice were found to be NH_4OH and NaOH. Once operating conditions where honed in using the iterative process described above, solvent feeds were examined. The feed inputs were minimized to produce the maximum results with the least amount of solvent. Additionally, other solvents were assessed. H_2CO_3, $Ca(OH)_2$, and KOH were among the common ones used to compare results generated from OLI and the common solvents cited in the literature. In most cases, the final solvents chosen were decided upon using the strategic perspective of downstream processing implications. Unwanted

byproducts or less than optimal conversions were the two leading factors in this decision making process when selecting the final solvent to be used at a reaction point.

Optimizing the Economic Performance and Hazard Minimization

Following the maximization of product purity and output through the optimization of reactor conditions and solvent flow rates, the overall process design was assessed on the basis of economic performance and processing hazards. Equipment costing was conducted to examine the capital investment required to construct the process designed in OLI. These equipment cost estimates took into account the operating temperature and pressure conditions, the estimated volume based on stream flow rates, and material requirements needed to prevent corrosion during operation. Additionally, safety and environmental concerns were identified by examining extreme processing conditions and waste streams. The most common hazards identified were high temperatures and pressures in operation as well as stream material dangers in the form of radioactivity when handling uranium compounds and harsh pH levels in solvent feeds.

Once the processing points that required unrealistic capital investments for pieces of equipment or exhibited high risk hazardous materials or processing conditions were identified, the OLI flowsheet was adjusted to minimize these factors. New separation schemes were devised that utilized more reasonable processing conditions, promoting a decreased operational risk to staff and a lower capital investment for equipment during plant construction. In doing these optimizations, the result was typically a decrease in product purity, however, this metric was monitored to ensure that the full market value of the product would be retained. By optimizing the flowsheet and then examining and addressing economic and safety concerns, the maximum product recovery was produced for a minimized capital investment and minimized operational risk to facility staff, the surrounding community, and the environment.

4.7 Safety, Health and Environment Analysis

This plant was designed with the safety, health and environmental impacts of reactants and products taken into consideration, as well as equipment hazards. The biggest cause for concern is the potential radiation exposure from thorium and uranium. Although the half lives of uranium and thorium are relatively long, both can still pose a potential health risk. This risk would be mitigated by isolating the uranium extraction point in the process from the rest of the plant. This isolation becomes feasible as a result of the early separation of uranium from the other REE components in the process. This aspect was one key result brought about by choosing the separation scheme used in this process design. By having uranium separated early in the process, proper shielding in areas of possible radiation exposure could be provided without the need to equip the entire plant for radiation hazards, limiting both the health risk to operators and financial investment required.

Another cause for concern in this process was the use of strong acids and bases in the process. Ensuring that all employees wear adequate personal protective equipment when working with these compounds would decrease this health risk. Inventory of these chemicals should be kept to a minimum, and storage tanks should be surrounded by a containment wall in case of a spill or leak.

Additionally, a scrubber system should be used throughout the plant to collect off-gas from reactors and calciners to ensure that emissions to the atmosphere are limited. Employees would be required to use respirators or other applicable PPE when working in and around equipment if deemed necessary. Chemical safety data for the components in this process is provided in Table 4.6.

Table 4.6 Stream Hazard Chart with NFPA Ratings and OSHA PELs

Component	Health	Flammability	Reactivity	PEL
Monazite	3	2	1	5 mg/m³
ThO2	2	0	0	0.25 mg/m³
La2O3	0	0	1	15 mg/m³
CeO2	1	0	0	15 mg/m³
Nd2O3	1	0	0	15 mg/m³
UO2	3	0	0	0.25 mg/m³
Sulfuric Acid	3	0	2	1 mg/m³
Ammonium Hydroxide	3	1	0	71 mg/m³
Sodium Hydroxide	3	0	1	2 mg/m³
Hydrochloric Acid	3	0	1	7 mg/m³
Silicon Dioxide	0	0	0	10 mg/m³

From a pollution prevention perspective, thorium and uranium would need to be kept in the product streams, in order to limit the amount of hazardous waste needing disposal. Secondary byproduct extraction of ammonium sulfate and sodium sulfate could also be utilized to further decrease the amount of contaminants in waste streams. Ammonium sulfate and sodium sulfate create the opportunity for generating additional revenue to offset some of the costs involved with the purchase of solvents. As an additional measure to minimize the hazard of exiting streams, the pH of the waste streams was moderated in the design to exit the plant between 6 and 9 for effective processing at a wastewater treatment facility.

Other potential safety hazards include the high temperatures and high pressures located throughout the plant. In order to mitigate these risks, automation will be used when applicable to limit the contact that operators have with equipment such as calciners and reactors. Insulation on high temperature equipment and pressure relief valves will also be utilized.

Training will be provided to employees so that they are aware of the hazards present and know what actions to take should something go wrong. The plant will follow all OSHA regulations in order to mitigate any safety, health, or environmental risk that may be present.

4.8 Process Economics

The economic viability of extracting thorium dioxide from monazite ore was analyzed as a key component in this process design. An assumption of 24-hour operation for 7 days per week and 48 weeks a year was used for the cost analysis and economic value of product outputs. With a process scale of 8.06 million kilograms of monazite ore processed annually, a maximum potential sales revenue with 100% product recovery using the assumed 48 weeks of operation per year was calculated to be $106.5 million based on the prices provided in Table 4.5-1.

Table 4.5-1: Product Market Pricing

Compound	Price ($/kg)
ThO2	$ 72.00
UO2	$ 45.80
SiO2	$ -
La2O3	$ 2.00
Ce2O3	$ 2.00
Nd2O3	$ 60.00
Na2SO4	$ 0.06
(NH4)2SO4	$ 0.09

When accounting for further loss of product in waste streams due to incomplete reaction conversion in the OLI simulation, the projected net sales revenue was $88.7 million based on the product outputs shown in Table 4.4, an 83.2% capture rate of total economic potential per year. Figure 1 shows a breakdown of revenue by product based on production volume and assumed price.

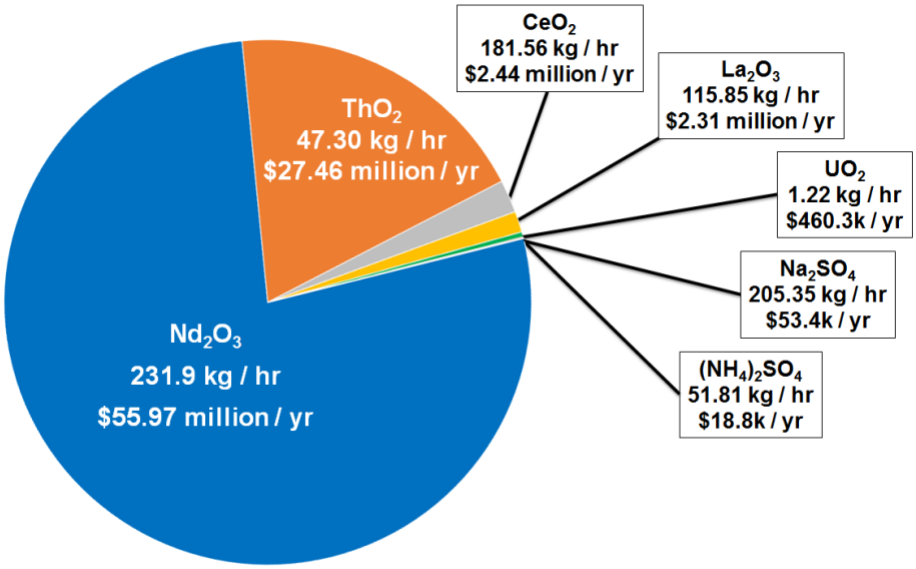

Figure 1: Revenue by Product Line

In examining the cost for raw materials, the primary expenses include monazite ore, sulfuric acid, ammonium hydroxide, sodium hydroxide, and hydrochloric acid. Table 4.5-2 shows the pricing assumed for each of these components as well as the total amount used per year throughout the plant design.

Table 4.5-2: Raw Material Costs and Usage

Material	Cost ($/kg)	Amount Used (kg/yr)
H2SO4	$ 0.40	10,874,999.5
HCl	$ 2.00	595,230.2
NaOH	$ 0.35	4,805,783.5
NH4OH	$ 0.20	6,761,466.8
Monazite	$ 1.00	8,064,000.0

Using the total feed of each of these raw materials annually and the assumed market price, the total expenditure required for these raw materials totals $16.6 million per year.

Based on the calculations of potential revenue from product output and expenses from raw materials purchases, a margin of $72.1 million per year remains available for utilities and other operating expenses in order to reach profitability.

4.9 Capital Cost Estimates

The total estimate for capital costs is $34.3 million and is broken down in the table below. All of the equipment which comes into contact with hot and/or pressurized acid or base is made of a nickel alloy in order to withstand the conditions. All tanks were sized for 6 hours of operation initially, and then doubled to 12 hours as an added safety factor. The capacity of the pumps were also increased by 10% as a safety factor. As noted in section 4.1 (Assumptions), the primary basis for the cost increase from 2004 values taken from Ulrich (2004) is a ChE Cost Index of 616, taken from December 2018. All costing data was derived from Ulrich (2004) and sample calculations for each category of equipment can be found in the Appendix.

Equipment Number	Capacity/Size Specifications	Base Material Equipment Cost		Material Factor, FM	Pressure or Other Factor, FP	Bare Module Factor, FBM	Bare Module Cost, CBM
		Year 2004	Year 2018				
Process Vessels Total Cost:							**$10,135,213**
R-100	1.86 m ID x 3.73 m vertical; 5 barg; nickel alloy	$20,000	$30,800	9.8	1.2	22.8	$703,078
R-101	0.88 m ID x 1.76 m vertical; 16 barg; nickel alloy	$6,000	$9,240	9.8	1.8	32.9	$304,373
R-102	0.92 m ID x 1.85 m vertical; 1 barg; nickel alloy	$6,250	$9,625	9.8	1.2	22.8	$219,712
R-103	1.13 m ID x 2.26 m vertical; 1 barg; nickel alloy	$9,250	$14,245	9.8	1.2	22.8	$325,173
R-201	0.91 m ID x 1.82 m vertical; 1 barg; nickel alloy	$6,250	$9,625	9.8	1.2	22.8	$219,712
R-301	1.90 m ID x 3.80 m vertical; 20 barg; nickel alloy	$20,000	$30,800	9.8	1.8	32.9	$1,014,577
R-302	1.57 m ID x 3.13 m vertical; 35 barg; nickel alloy	$16,000	$24,640	9.8	2.5	44.7	$1,102,394
R-401	2.18 m ID x 4.36 m vertical; 1 barg; nickel alloy	$25,000	$38,500	9.8	1.2	22.8	$878,847
R-402	1.68 m ID x 3.37 m vertical; 1 barg; nickel alloy	$17,125	$26,373	9.8	1.2	22.8	$602,010
R-501	1.46 m ID x 2.92 m vertical; 19 barg; nickel alloy	$15,250	$23,485	9.8	1.8	32.9	$773,615
R-502	1.22 m ID x 2.45 m vertical; 15 barg; nickel alloy	$9,750	$15,015	9.8	1.8	32.9	$494,606
R-503	1.47 m ID x 2.94 m vertical; 20 barg; nickel alloy	$15,250	$23,485	9.8	1.8	32.9	$773,615
R-504	1.64 m ID x 3.28 m vertical; 5 barg; nickel alloy	$16,375	$25,218	9.8	1.3	24.5	$618,152
R-601	1.09 m ID x 2.18 m vertical; 1 barg; nickel alloy	$9,000	$13,860	9.8	1.2	22.8	$316,385
R-701	1.70 m ID x 3.40 m vertical; 27 barg; nickel alloy	$17,125	$26,373	9.8	1.3	24.5	$646,464
R-801	2.45 m ID x 4.89 m vertical; 1 barg; nickel alloy	$32,500	$50,050	9.8	1.2	22.8	$1,142,501

	Separators Total Cost:						**$9,854,864**
F-100	1.86 m ID x 3.73 m vertical; 5 barg; nickel alloy	$20,000	$30,800	9.8	1.2	22.8	$703,078
F-101	0.88 m ID x 1.76 m vertical; 16 barg; nickel alloy	$6,000	$9,240	9.8	1.8	32.9	$304,373
F-102	0.92 m ID x 1.85 m vertical; 5 barg; nickel alloy	$6,250	$9,625	9.8	1.2	22.8	$219,712
F-103	1.13 m ID x 2.26 m vertical; 5 barg; nickel alloy	$9,250	$14,245	9.8	1.2	22.8	$325,173
F-201	0.91 m ID x 1.82 m vertical; 5 barg; nickel alloy	$6,250	$9,625	9.8	1.2	22.8	$219,712
F-301	1.90 m ID x 3.80 m vertical; 20 barg; nickel alloy	$20,000	$30,800	9.8	1.8	32.9	$1,014,577
F-302	1.57 m ID x 3.13 m vertical; 35 barg; nickel alloy	$16,000	$24,640	9.8	2.5	44.7	$1,102,394
F-401	2.18 m ID x 4.36 m vertical; 5 barg; nickel alloy	$25,000	$38,500	9.8	1.2	22.8	$878,847
F-402	1.68 m ID x 3.37 m vertical; 5 barg; nickel alloy	$17,125	$26,373	9.8	1.2	22.8	$602,010
F-501	1.46 m ID x 2.92 m vertical; 19 barg; nickel alloy	$15,250	$23,485	9.8	1.8	32.9	$773,615
F-502	1.22 m ID x 2.45 m vertical; 15 barg; nickel alloy	$9,750	$15,015	9.8	1.8	32.9	$494,606
F-503	1.47 m ID x 2.94 m vertical; 20 barg; nickel alloy	$15,250	$23,485	9.8	1.8	32.9	$773,615
F-504	1.64 m ID x 3.28 m vertical; 5 barg; nickel alloy	$16,375	$25,218	9.8	1.3	24.5	$618,152
F-601	1.09 m ID x 2.18 m vertical; 5 barg; nickel alloy	$9,000	$13,860	9.8	1.2	2.6	$36,036
F-701	1.70 m ID x 3.40 m vertical; 27 barg; nickel alloy	$17,125	$26,373	9.8	1.3	24.5	$646,464
F-801	2.45 m ID x 4.89 m vertical; 5 barg; nickel alloy	$32,500	$50,050	9.8	1.2	22.8	$1,142,501
	Mixers Total Cost:						**$3,357,200**
M-100	4.69 kW; nickel alloy; axial impeller; mechanical seal agitator	$15,000	$23,100			5	$115,500
M-101	0.78 kW; nickel alloy; axial impeller; mechanical seal agitator	$10,000	$15,400			5	$77,000
M-102	0.87 kW; nickel alloy; axial impeller; mechanical seal agitator	$10,000	$15,400			5	$77,000
M-103	1.41 kW; nickel alloy; axial impeller; mechanical seal agitator	$12,000	$18,480			5	$92,400
M-201	0.84 kW; nickel alloy; axial impeller; mechanical seal agitator	$10,000	$15,400			5	$77,000
M-301	4.92 kW; nickel alloy; axial impeller; mechanical seal agitator	$15,000	$23,100			5	$115,500
M-302	3.09 kW; nickel alloy; axial impeller; mechanical seal agitator	$14,000	$21,560			5	$107,800
M-401	6.82 kW; nickel alloy; axial impeller; mechanical seal agitator	$20,000	$30,800			5	$154,000
M-402	3.68 kW; nickel alloy; axial impeller; mechanical seal agitator	$14,000	$21,560			5	$107,800
M-501	2.60 kW; nickel alloy; axial impeller; mechanical seal agitator	$13,000	$20,020			5	$100,100
M-502	1.71 kW; nickel alloy; axial impeller; mechanical seal agitator	$12,000	$18,480			5	$92,400
M-503	2.66 kW; nickel alloy; axial impeller; mechanical seal agitator	$13,000	$20,020			5	$100,100
M-504	3.45 kW; nickel alloy; axial impeller; mechanical seal agitator	$14,000	$21,560			5	$107,800
M-601	1.29 kW; nickel alloy; axial impeller; mechanical seal agitator	$12,000	$18,480			5	$92,400
M-701	376 kW; nickel alloy; axial impeller; mechanical seal agitator	$14,000	$21,560			5	$107,800
M-801	9.01 kW; nickel alloy; axial impeller; mechanical seal agitator	$20,000	$30,800			5	$154,000
M-100A	4.69 kW; nickel alloy; axial impeller; mechanical seal agitator	$15,000	$23,100			5	$115,500
M-101A	0.78 kW; nickel alloy; axial impeller; mechanical seal agitator	$10,000	$15,400			5	$77,000
M-102A	0.87 kW; nickel alloy; axial impeller; mechanical seal agitator	$10,000	$15,400			5	$77,000
M-103A	1.41 kW; nickel alloy; axial impeller; mechanical seal agitator	$12,000	$18,480			5	$92,400
M-201A	0.84 kW; nickel alloy; axial impeller; mechanical seal agitator	$10,000	$15,400			5	$77,000
M-301A	4.92 kW; nickel alloy; axial impeller; mechanical seal agitator	$15,000	$23,100			5	$115,500
M-302A	3.09 kW; nickel alloy; axial impeller; mechanical seal agitator	$14,000	$21,560			5	$107,800
M-401A	6.82 kW; nickel alloy; axial impeller; mechanical seal agitator	$20,000	$30,800			5	$154,000
M-402A	3.68 kW; nickel alloy; axial impeller; mechanical seal agitator	$14,000	$21,560			5	$107,800
M-501A	2.60 kW; nickel alloy; axial impeller; mechanical seal agitator	$13,000	$20,020			5	$100,100
M-502A	1.71 kW; nickel alloy; axial impeller; mechanical seal agitator	$12,000	$18,480			5	$92,400
M-503A	2.66 kW; nickel alloy; axial impeller; mechanical seal agitator	$13,000	$20,020			5	$100,100
M-504A	3.45 kW; nickel alloy; axial impeller; mechanical seal agitator	$14,000	$21,560			5	$107,800
M-601A	1.29 kW; nickel alloy; axial impeller; mechanical seal agitator	$12,000	$18,480			5	$92,400
M-701A	376 kW; nickel alloy; axial impeller; mechanical seal agitator	$14,000	$21,560			5	$107,800
M-801A	9.01 kW; nickel alloy; axial impeller; mechanical seal agitator	$20,000	$30,800			5	$154,000
	Calciners Total Cost:						**$4,196,500**
Cal-La	18,200 L rotary kiln; stainless steel	$220,000	$338,800			5	$1,694,000
Cal-Ce	36,600 L rotary kiln; stainless steel	$175,000	$269,500			5	$1,347,500
Cal-Nb	14,600 L rotary kiln; stainless steel	$150,000	$231,000			5	$1,155,000
	Heat Exchangers Total Cost:						**$240,502**
HX1	2.98 mol/s; heating; NH4OH; nickel alloy	$8,625	$13,283	2.8			$37,191
HX2	1.39 mol/s; heating; H2SO4; nickel alloy	$8,625	$13,283	2.8			$37,191
HX3	0.28 mol/s; heating; NaOH; nickel alloy	$4,600	$7,084	2.8			$19,835
HX4	3.86 mol/s; cooling; NaOH; nickel alloy	$4,600	$7,084	2.8			$19,835
HX5	0.28 mol/s; heating; HCl; nickel alloy	$4,600	$7,084	2.8			$19,835
HX6	17.86 mol/s; heating; water; nickel alloy	$20,125	$30,993	2.8			$86,779
HX7	8.61 mol/s; cooling; water; nickel alloy	$4,600	$7,084	2.8			$19,835

	Pumps Total Cost:						**$6,458,479**
P-100M	0.97 kW shaft power, centrifugal, nickel alloy, 3 barg	$4,000	$6,160	3.5	1	7.25	$44,660
P-100A1	3.50 kW shaft power, centrifugal, nickel alloy, 3 barg	$6,500	$10,010	3.5	1	7.25	$72,573
P-100A2	3.50 kW shaft power, centrifugal, nickel alloy, 3 barg	$6,500	$10,010	3.5	1	7.25	$72,573
P-100	8.23 kW shaft power, centrifugal, nickel alloy, 3 barg	$8,500	$13,090	3.5	1	7.25	$94,903
VP-100	47.8 kW shaft power, centrifugal, nickel alloy, 18 barg	$17,000	$26,180	3.5	1.4	9.35	$244,783
WP-100	6.37 kW shaft power, centrifugal, nickel alloy, 18 barg	$8,000	$12,320	3.5	1.4	9.35	$115,192
P-102	2.97 kW shaft power, centrifugal, nickel alloy, 18 barg	$5,500	$8,470	3.5	1.4	9.35	$79,195
VP-101	1.37 kW shaft power, centrifugal, nickel alloy, 3 barg	$4,500	$6,930	3.5	1	7.25	$50,243
WP-101	0.48 kW shaft power, centrifugal, nickel alloy, 3 barg	$3,000	$4,620	3.5	1	7.25	$33,495
P-103	1.08 kW shaft power, centrifugal, nickel alloy, 3 barg	$4,500	$6,930	3.5	1	7.25	$50,243
P-104	1.19 kW shaft power, centrifugal, nickel alloy, 3 barg	$4,500	$6,930	3.5	1	7.25	$50,243
VP-102	1.14 kW shaft power, centrifugal, nickel alloy, 3 barg	$4,500	$6,930	3.5	1	7.25	$50,243
BP-102	0.21 kW shaft power, centrifugal, nickel alloy, 3 barg	$2,500	$3,850	3.5	1	7.25	$27,913
P-105	0.72 kW shaft power, centrifugal, nickel alloy, 3 barg	$3,500	$5,390	3.5	1	7.25	$39,078
P-106	2.08 kW shaft power, centrifugal, nickel alloy, 3 barg	$5,500	$8,470	3.5	1	7.25	$61,408
VP-103	2.02 kW shaft power, centrifugal, nickel alloy, 3 barg	$5,500	$8,470	3.5	1	7.25	$61,408
WP-103	2.02 kW shaft power, centrifugal, nickel alloy, 3 barg	$5,500	$8,470	3.5	1	7.25	$61,408
P-110	7.97 kW shaft power, centrifugal, nickel alloy, 3 barg	$8,000	$12,320	3.5	1	7.25	$89,320
VP-111	63.0 kW shaft power, centrifugal, nickel alloy, 22 barg	$22,000	$33,880	3.5	1.52	9.98	$338,122
WP-111	0.06 kW shaft power, centrifugal, nickel alloy, 3 barg	$2,500	$3,850	3.5	1	7.25	$27,913
P-201	1.09 kW shaft power, centrifugal, nickel alloy, 3 barg	$4,500	$6,930	3.5	1	7.25	$50,243
P-202	1.08 kW shaft power, centrifugal, nickel alloy, 3 barg	$4,500	$6,930	3.5	1	7.25	$50,243
VP-201	7.94 kW shaft power, centrifugal, nickel alloy, 22 barg	$8,000	$12,320	3.5	1.45	9.6125	$118,426
WP-201	0.06 kW shaft power, centrifugal, nickel alloy, 3 barg	$2,500	$3,850	3.5	1	7.25	$27,913
VP-300-1	83.5 kW shaft power, centrifugal, nickel alloy, 9 barg	$22,000	$33,880	3.5	1	7.25	$245,630
VP-300-2	83.5 kW shaft power, centrifugal, nickel alloy, 9 barg	$22,000	$33,880	3.5	1	7.25	$245,630
WP-300	108.0 kW shaft power, centrifugal, nickel alloy, 37 barg	$28,000	$43,120	3.5	1.85	11.7125	$505,043
P-301-1	72.9 kW shaft power, centrifugal, nickel alloy, 37 barg	$22,000	$33,880	3.5	1.85	11.7125	$396,820
VP-301	5.99 kW shaft power, centrifugal, nickel alloy, 3 barg	$8,000	$12,320	3.5	1	7.25	$89,320
WP-301	61.3 kW shaft power, centrifugal, nickel alloy, 21 barg	$22,000	$33,880	3.5	1.47	9.7175	$329,229
P-401-1	7.99 kW shaft power, centrifugal, nickel alloy, 4 barg	$8,000	$12,320	3.5	1	7.25	$89,320
P-402-1	13.3 kW shaft power, centrifugal, nickel alloy, 4 barg	$10,000	$15,400	3.5	1	7.25	$111,650
P-403-1	14.9 kW shaft power, centrifugal, nickel alloy, 3 barg	$10,000	$15,400	3.5	1	7.25	$111,650
VP-401	14.9 kW shaft power, centrifugal, nickel alloy, 3 barg	$10,000	$15,400	3.5	1	7.25	$111,650
WP-401	0.22 kW shaft power, centrifugal, nickel alloy, 3 barg	$2,500	$3,850	3.5	1	7.25	$27,913
P-404	6.75 kW shaft power, centrifugal, nickel alloy, 3 barg	$8,000	$12,320	3.5	1	7.25	$89,320
P-405	6.88 kW shaft power, centrifugal, nickel alloy, 3 barg	$8,000	$12,320	3.5	1	7.25	$89,320
VP-402	30.2 kW shaft power, centrifugal, nickel alloy, 29 barg	$17,000	$26,180	3.5	1.72	11.03	$288,765
WP-402	0.06 kW shaft power, centrifugal, nickel alloy, 3 barg	$2,500	$3,850	3.5	1	7.25	$27,913
P-501-1	24.1 kW shaft power, centrifugal, nickel alloy, 21 barg	$13,000	$20,020	3.5	1.47	9.7175	$194,544
VP-501	43.2 kW shaft power, centrifugal, nickel alloy, 29 barg	$17,000	$26,180	3.5	1.72	11.03	$288,765
WP-501	43.8 kW shaft power, centrifugal, nickel alloy, 17 barg	$17,000	$26,180	3.5	1.32	8.93	$233,787
P-502-1	7.26 kW shaft power, centrifugal, nickel alloy, 17 barg	$8,000	$12,320	3.5	1.32	8.93	$110,018
VP-502	14.2 kW shaft power, centrifugal, nickel alloy, 22 barg	$10,000	$15,400	3.5	1.52	9.98	$153,692
WP-502	2.77 kW shaft power, centrifugal, nickel alloy, 3 barg	$5,500	$8,470	3.5	1	7.25	$61,408
P-503	1.46 kW shaft power, centrifugal, nickel alloy, 22 barg	$4,500	$6,930	3.5	1.52	9.98	$69,161
P-601	1.23 kW shaft power, centrifugal, nickel alloy, 3 barg	$4,500	$6,930	3.5	1	7.25	$50,243
P-602	1.86 kW shaft power, centrifugal, nickel alloy, 3 barg	$5,000	$7,700	3.5	1	7.25	$55,825
VP-601	9.94 kW shaft power, centrifugal, nickel alloy, 22 barg	$8,500	$13,090	3.5	1.52	9.98	$130,638
WP-601	2.01 kW shaft power, centrifugal, nickel alloy, 3 barg	$5,500	$8,470	3.5	1	7.25	$61,408
VP-503	30.7 kW shaft power, centrifugal, nickel alloy, 29 barg	$17,000	$26,180	3.5	1.72	11.03	$288,765
WP-503	5.62 kW shaft power, centrifugal, nickel alloy, 3 barg	$8,000	$12,320	3.5	1	7.25	$89,320
	Total Capital Cost:						**$34,242,757.32**

4.10 Manufacturing Cost Estimates

MANUFACTURING COST SUMMARY

Job Title: Extraction of Thorium Dioxide and other REE Oxides from Monazite Ore
Annual Capacity (kg/yr): 8.4M
Effective Date to Which Estimate Applies: 2018 Cost Index Type: CE Plant Cost Index
Cost Index Value _616_

Capital						
Fixed capital, CFC					$34,242,757.32	
Working capital (15% of fixed capital), CWC					$5,136,413.60	
Total capital investment, CTC					$39,379,170.92	
Manufacturing Expenses						**Annual Cost**
Direct					**$/yr**	**$/yr**
Raw materials					$12,282,949.32	
Catalysts and solvents					$11,773,675.34	
Operating labor (30)					$2,002,800.00	
Supervisory and clerical labor (20% of operating labor)					$400,560.00	
Utilities						
Steam	1333825	kg/y	1 barg @	0.08 $/kg	$102,704.53	
Electricity	110400514.6	kWh/yr @	0.12	$/kWh	$13,248,061.75	
Process water	156353.82	m3/yr @	1.22	$/m3	$190,751.66	
Cooling Liquid (liquid Nitrogen)	46509120	KJ/yr@	0.01	$/KJ	$241,847.42	
Maintenance and repairs (6% of fixed capital)					$2,054,565.44	
Operating supplies (15% of maint & repairs)					$308,184.82	
Laboratory charges (10-20% of operating labor)					$300,420.00	
Patents and royalties (3% of total expense)					$1,287,195.61	
Total, ADME					$44,193,715.88	$44,193,715.88
Indirect						
Overhead (payroll and plant), packaging, storage (60% of op. Labor+supervision+ maint.)					$2,674,755.26	
Local taxes (2% of fixed capital)					$684,855.15	
Insurance (1.5% of fixed capital)					$513,641.36	
Total, AIME					$3,873,251.77	$3,873,251.77
Total manufacturing expense, AME=ADME+AIME					$48,066,967.65	$48,066,967.65
General Expenses						
Administrative costs (25% of overhead)					$668,688.82	
Distribution and selling (10% of total expense)					$4,806,696.76	
Research and development (5% of total expense)					$2,403,348.38	
Total general expense, AGE					$7,878,733.96	$7,878,733.96
Depreciation (approximately 10% of fixed capital), ABD					$3,424,275.73	
Total Expenses, ATE						$59,369,977.34
Revenue from Sales						$ 88,714,180.48
Net annual profit, ANP						$29,344,203.14
Income taxes (net annual profit times the tax rate), AIT						$ 10,270,471.10
Net annual profit after taxes (ANP-AIT), ANNP						$19,073,732.04
					Aftertax rate of return, i = (1.5 ANNP/CTC) x 100 =	72.65%

5.0 Discussion of Results

In conducting this design process, several key aspects became apparent as the process grew from inception to completion.

The first is the iterative nature of the design process itself. Beginning with OLI Flowsheet to examine and optimize operating conditions, the realization quickly dawned that the simulation experience became an optimization task to itself. Not only were

conditions optimized in each of the reactors in the design, but also the variation in the separation scheme and solvent selection became an iterative optimization problem. Reactor conditions, pressures and temperatures, were fairly straightforward for manually finding the conditions that yield the most product at the highest purity. A bisection method was used to narrow in on the conditions that provided the best performance. However, a larger view was necessary when designing to account for the entire process.

Each of the separation points utilized in the presented process design were selected with great consideration. The extraction of thorium and uranium early in the process allowed for a reduction in process hazards created by radioactivity. By choosing to separate these components first, this process was able to isolate the target compound effectively while also taking into account risk management in a real-world operational setup. The second compound separated from the process stream was neodymium. This separation was chosen next due to the economic value created by effectively isolating neodymium. With this major revenue generator extracted, the plant was able to hit both the target of extracting thorium while also providing a support for economic viability.

With thorium, neodymium, and uranium each separated and purified, isolating cerium and lanthanum became a matter of extra revenue generation while not being critical to the mission and overall function of the facility. Similarly, the added extraction of ammonium sulfate and sodium sulfate, while generating a small amount of revenue, functions to reduce the level of contamination in waste streams exiting the facility. The decision to isolate these final products was made with an environmental focus in mind rather than a sole focus on the economic value of the products.

Each of these extraction pathways was iterated with different compound being extracted earlier or later in the process. The final design was chosen because it not only most effectively met the objectives for the design requirements in terms of target compounds, product purity levels, and plant economic performance, but it also improved both the safety and environmental hazards associated with the processing of monazite and the selected solvents.

This point lead to the second major insight gained from this design experience which is the level of integration needed between different departments. The final process addressed concerns in chemical engineering, industrial operations, environmental protection, risk management, and business performance. By conducting the design process with an iterative approach, the final proposed process accounted for each of these disciplines. The final result was an overall design that placed emphasis on optimization in each of these departments rather than simply optimizing the chemical engineering aspect alone. The level of integration in the design process itself created a plant structure that has a higher probability of succeeding in each of these fields, a necessity if the plant design is to ever make it past the design phase. This emphasis on integrating multiple disciplines was a key aspect that guided many of the decision made along the design process as well revealed how vital collaboration between disciplines is when attempting to solve real-world problems.

6.0 Conclusions

The process of extracting REEs using sulfuric acid was very successful usings the simulation system of OLI. The overall results obtained showed that the plants profitability was maximized through the efficiency of the particular extraction taking place at specific times within the process.The original focus of the assignment was to extract thorium from the REEs, but upon further investigation it was discovered that neodymium was the most profitable resource coming out of this particular design. The process is still successful in separating the thorium, but it profit only generates about $27.46 million per year whereas neodymium produces 55.97 million per year. This plant would be extremely successful if this simulation were actually implemented within todays REE processing. The gross revenue per year is about 88.71 million and total expenses were roughly 60.0 million so the final annual profit ends up being 18.66 million per year after taxes. This would generate the plant payback period being around 2.11 years which on an industrial timeline is quite quickly.

The safety and well being of the plants workers as well as the environment were taken into extreme consideration when designing this process. The reactors were all ran at safe temperature while the proper number of workers to shifts was calibrated

correctly to ensure that if something went wrong the proper people and protocols were to be utilized. The process condition were also designed in a way that minimized the hazards involving 24 hour operating conditions and the solvent concentrations. When dealing with the waste streams there is a treatment process that will extract potential by products while also neutralizing unreacted solvents, which is not only better for the environment, but also for the population of people surrounding the processing facility. This plant is extremely profitable and efficient, this could be the future of how the processing of REEs could be done.

7.0 Recommendations

The following recommendations are provided by the group to take the project into future directions:

1. Reactors and separators can be designed for an optimal residence time in order to streamline the process.
2. The possibility of grinding the product should be explored to find an optimal particle feed size to maximize reaction conditions while keeping safety prevalent.
3. The filters in the OLI simulation assume 100% filtration. This aspect should be explored to find optimal separation techniques throughout the process.
4. Additionally, the vacuum filters should be explored to find the most effective caking thickness and ideal filtration vessel diameter for operation.
5. Piping should be designed to minimize the plant footprint.
6. A control system can be utilized for data collection and automated operation. This will drive operational efficiency with decreased energy usage.
7. To minimize costs and waste, recovery of steam condensate to be re-used as process water should be implemented.

8.0 References

1. **Amer, T.E. "A Suggested Alternative Procedure for Processing of Monazite Mineral Concentrate." *NeuroImage*, Academic Press, 29 Oct. 2013, www.sciencedirect.com/science/article/pii/S0301751613002007.**
2. **Kumari, Archana. "Process Development to Recover Rare Earth Metals from Monazite Mineral: A Review." *NeuroImage*, Academic Press, 9 June 2015, www.sciencedirect.com/science/article/pii/S0892687515001752.**
3. **Rodliyah, Isyatun, Siti Rochani, and Tatang Wahudi. "Extraction of Rare Earth Metals From Monazite Mineral Using Acid Method." Indonesian Mining Journal 18.1 (2015): 39-45**
4. **Software utilized (OLI and Microsoft Office)**
5. **Ulrich, Gael D., and Palligarnai T. Vasudevan. *Chemical Engineering Process Design and Economics A Practical Guide*. 2nd ed., vol. 2, Process (Ulrich) Publishing, 2004.**

Appendix A: Sample Calculations for Equipment Costing

<u>Process Vessel/Separator Example Calculation</u>

Process vessels and Separators were sized the with the same method since both are of the basis of an empty tank which is modified for specific use.

The OLI output shows a flow rate of approximately 850 liters per hour through Reactor R-100. An arbitrary number of 6 hours was selected for holding time of product and then doubled to 12 as a safety factor, therefore the volume needed in the tank is:

$$850\ \frac{L}{hr} * 12\ hrs = 10{,}200\ L = 10.2m^3$$

A mixing drum should have a length to diameter ratio of 1:2 (Ulrich, pgs. 232-233). Therefore, using the following equations, a solver was used to determine the length and diameter of the vessel:

$$h = 2D$$

$$V = \pi \frac{D^2}{4} h = \frac{\pi D^3}{2}$$

$$D = \left[\frac{2V}{\pi}\right]^{\frac{1}{3}} = \left[\frac{2 * 10.2m^3}{\pi}\right]^{\frac{1}{3}}$$

$$D = 1.87\ m \quad h = 3.73\ m$$

From here, Figure 4.44 (Ulrich, pg. 387) can be used to determine the Purchased Equipment Cost, C_P. The vertically oriented tanks were chosen in order to increase the number of vessels or other pieces of equipment per unit area of the plant. From this table, the C_P value is approximately $20,000.

The pressure needed for the reaction in Reactor R-100 is approximately 5 barg. Figure 5.45 (Ulrich, pg. 388) shows that the Pressure Factor, F_P related to 5 barg is 1.2. Additionally, a Material Factor, F_M of 9.8 is assigned from the same figure to account for Nickel Alloy.

Finally, Figure 5.46 (Ulrich, pg. 388) gives the Bare Module Factor, F_{BM} by combining the Pressure and Material Factors. For vertical orientation and F_P x F_M = 11.8, the given F_{BM} is 22.8272.

Additionally, since the original C_P value is priced at a 2004 ChE cost Index of 400, it must be scaled up to the December 2018 value of 616.

$$C_{BM} = C_P * F_{BM}$$
$$C_{BM} = \$20{,}000\left(\frac{616}{400}\right) * 22.827 = \$703{,}000$$

<u>Agitator Example Calculation</u>

Power consumption of an agitator is based off of the volume moved in the vessel (Ulrich, 2004), therefore this calculation will be based off of Reactor R-100 above. A determined volume of 5.1 m^3 has been determined for this vessel. According to Table 4.16 (Ulrich, pg. 212), a mechanically-aided, agitated propeller in a liquid-solid mixing state has a power consumption of:

$$P\ (kW) = 0.1 * V^{0.8}\ to\ 2.0 * V^{0.8}$$
$$P\ (kW) = 0.1 * 10.2^{0.8}\ to\ 2.0 * 10.2^{0.8}$$
$$P\ (kW) = 0.64\ to\ 12.82$$

Since the mixture between solids and liquids consists of a slurry which is flooded with solvents, a generous approach can be taken to take a weighted average of the two values:

$$P\ = \frac{0.64 + 0.64 + 12.82}{3} = 4.70\ kW$$

An agitator with a mechanical seal was chosen to account for tanks which are pressurized. From Figure 5.42 (Ulrich, pg. 386), an agitator with a mechanical seal at 2.69 kW has a Purchased Equipment Cost of C_P = \$15,000. A Bare Module Factor, F_{BM} is defined as 5.0 in the same figure due to Nickel Alloy. Again, the ChE Cost Index must be scaled up. Therefore:

$$C_{BM} = C_P * F_{BM}$$
$$C_{BM} = \$15{,}000\left(\frac{616}{400}\right) * 5.0 = \$115{,}500$$

<u>Heat Exchanger Example Calculation</u>

Heat exchangers start with the overall balances:

$$Q = q * C_p * (T_{hi} - T_{ho})$$
$$Q = U * A * \Delta T_{lm}$$

$$\Delta T_{lm} = \frac{(T_{hi} - T_{co}) - (T_{ho} - T_{ci})}{ln\left(\frac{T_{hi} - T_{co}}{T_{ho} - T_{ci}}\right)}$$

Where q is flow rate in mol/s, C_p is heat capacity of the fluid in J/molK (assumed to be the value of water), Q is energy is J/s, U is the overall heat transfer coefficient in W/m^{2}K, and all Temperatures are in K. The goal is to determine A, the surface area of the exchanger in m^2 which will be used to determine equipment cost.

For a heat exchanger in which the product is being heated by steam, we know the following values: T_{ci} (temperature of the incoming product), T_{co} (temperature of the heated product, T_{hi} (temperature of the incoming steam), q (from OLI), and C_p (from OLI). Two assumptions will be made: T_{ho} (temperature of the outgoing steam) and U. In the case of product being cooled by a cooling fluid, T_{ho} will be known and T_{co} will instead be assumed.

U can be estimated using Table 4-15a (Ulrich, pp. 205-207). The outgoing temperature of the heating or cooling material was made by a reasonable assumption which was accepted or rejected based on the subsequent sizing and pricing of the heat exchanger.

For Heat Exchanger HX6, in which a solvent at approximately 18 mol/s is heated from 25 C to 295 C using pressurized steam at 350 C:

$$\Delta T_{lm} = \frac{(350 - 295) - (300 - 25)}{ln\left(\frac{350 - 295}{300 - 25}\right)} = 137\ K$$

$$Q = q * C_p * (T_{hi} - T_{ho}) = 18\frac{mol}{s} * 76\frac{J}{mol\ K} * (350 - 300)K$$

$$Q = 68{,}400\frac{J}{s} = 68.4\frac{kJ}{s}$$

$$A = \frac{Q}{U * \Delta T_{lm}} = \frac{68.4\ \frac{kJ}{s}}{0.60\ \frac{kJ}{m^2 s\ K} * 137\ K} = 1.65\ m^2$$

A spiral plate heat exchanger from Figure 5.39 (Ulrich, pg. 385) was used to cost the heat exchanger using the area that was found above, and the Purchased Equipment Cost is C_P = $3,500 for 2004 and will be scaled up to the December 2018 value.

Pressure is not a concern in the system and therefore only the material is considered in F_{BM} = 2.8.

$$C_{BM} = C_P * F_{BM}$$
$$C_{BM} = \$3{,}500\left(\frac{616}{400}\right) * 2.8 = \$86{,}780$$

<u>Calciner Example Calculation</u>

The calciners in this process were modeled after direct rotary kilns as defined by Ulrich (2004). Table 4.10 (Ulrich, pp. 170-173) sizes the equipment based on mass flow rate in kg/s (note that 2*m* is used rather than *m* as an added safety factor):

$$L = 25D$$
$$2m = 0.004LD^2 = 0.004 * 25 * D^3$$

The Cerium calciner has a flow rate of approximately 336 kg/hr, or 0.0933 kg/s.

$$D = \left[\frac{2m}{0.004 * 25}\right]^{\frac{1}{3}} = \left[\frac{2 * 0.0933\frac{kg}{s}}{0.004 * 25}\right]^{\frac{1}{3}}$$

$$D = 1.23m \quad L = 30.8m$$

$$V = \pi r^2 L = \pi\left(\frac{1.23m}{2}\right)^2 * 10.8m = 36.6m^3$$

Rotary kilns are costed by internal volume in Figure 5.33 (Ulrich, p. 381). In this case, the C_P value is $220,000 before ChE Cost Index scale-up. The F_{BM} value is 5.0 to account for a nickel-alloy lining with a stainless steel outer shell. Therefore:

$$C_{BM} = C_P * F_{BM}$$
$$C_{BM} = \$22{,}000\left(\frac{616}{400}\right) * 5.0 = \$1{,}694{,}000$$

<u>Centrifugal Pump Example Calculation</u>

The cost of pumps is based off of shaft power in kW (Ulrich, 2004). The equation for this is:

$$w_s = \frac{q\Delta p}{\varepsilon}$$

While an actual layout of the plant is not known to calculate required pressure differential, an assumed value of 3 barg can be used for most cases, with a rising value for process conditions which may require it. Additionally, an efficiency of 0.45 is assumed across all pumps. Pump P-100M has a flow rate of 88.3 L/hr, or 1.47E-03 m^3/s.

$$w_s = \frac{1.47 * 10^{-3}\frac{m^3}{s} * 3.0barg * (1 * 10^5 \frac{kg}{m\ s^2 barg})}{0.45} = 980\frac{kg\ m^2}{s^2} = 0.98\ kW$$

Figure 5.49 (Ulrich, p 390) can be traced to find a C_P value of $4,000. Since this pump operates at less than 10 barg, the F_P value is 1.0. A F_M value of 3.5 is applied to account for the nickel alloy. F_{BM} is found by multiplying F_P by F_M and tracing figure 5.51 (Ulrich, p 391). In this case, the F_{BM} is 7.25.

$$C_{BM} = C_P * F_{BM}$$
$$C_{BM} = \$4{,}000\left(\frac{616}{400}\right) * 7.25 = \$44{,}660$$

Appendix B: Calculations for Utility Costs

Utility costs are calculated using values for a grass-roots plant. The price of a given utility in dollars per unit $C_{s,u}$is calculated from $C_{s,u} = a\ x\ (CE\ Plant\ Cost\ Index) + b\ x\ C_{s,f}$where coefficients a and b are taken from Table 6.3 in Ulrich's book, Chemical Engineering, Process Design and Economics: A Practical Guide. $C_{s,f}$ is the price of fuel used to generate the utility.

Steam

$$C_{s,s} = (1.15x10^{-4})(616) + (1.25 * 10^{-3})(4.7) = \ \$0.077/kg\ of\ steam$$
$$m_s = \frac{q}{h} = \frac{86.602\ kW}{2257.92\ kJ/kg} = (0.0384\ kg/s)(3600\ s/hr)(8064\ hr/yr)$$
$$= 1{,}113{,}455\ kg/yr\ of\ steam$$

Electricity

$$C_{s,e} = (1.1x10^{-4})(616) + (0.011)(4.7) = \$0.12/kW - hr$$
$$Total\ kW - hr = 13690.54\ kW\ \ * 8064\ hours = 110{,}400{,}514.6\ kW - hr$$

Liquid Nitrogen

$$C_{s,r} = (0.5)(1.538^{0.9})(65^{-3})(616) + (1.1x10^{-6})(65^{-5})(4.7) = \$0.0052/kJ$$

$$Total\ kJ = (1.538kJ/s)(3600\ s/hr)(8064\ hr/yr) = 44{,}648{,}756\ kJ/yr$$