To the Graduate Council:

I am submitting herewith a thesis written by Ricky D. Holland entitled "Evaluation and Improvement of the Qualitative Characteristics of Micellar Electrokinetic Capillary Chromatography." I have examined the final copy of this thesis for form and content and recommend that it be accepted in partial fulfillment of the requirements for the degree of Master of Science, with a major in Chemistry.

Michael J. Sepaniak, Major Professor

We have read this thesis
and recommend its acceptance:

James Q Chambers

Craig E Barnes

Accepted for the Council:

Associate Vice Chancellor
and Dean of the Graduate School

STATEMENT OF PERMISSION TO USE

In presenting this thesis in partial fulfillment of the requirements for a Master's degree at The University of Tennessee, Knoxville, I agree that the Library shall make it available to borrows under rules of the Library. Brief quotations from this thesis are allowable without special permission, provided that accurate acknowledgment of the source is made.

Permission for extensive quotation from or reproduction of this thesis may be granted by my major professor, or in his absence, by the Head of Interlibrary Services when, in the opinion of either, the proposed use of the material is for scholarly purposes. Any copying or use of the material in this thesis for financial gain shall not be allowed without my written permission.

Signature Ted D. Holland

Date July 10, 1992

EVALUATION AND IMPROVEMENT OF THE QUALITATIVE CHARACTERISTICS OF MICELLAR ELECTROKINETIC CAPILLARY CHROMATOGRAPHY

A Thesis

Presented for the

Master of Science

Degree

The University of Tennessee, Knoxville

Ricky Dean Holland

August 1992

DEDICATION

This thesis is dedicated to my parents

Coy W. Holland

and

Annie L. Holland

ACKNOWLEDGMENTS

I would like to thank my major professor, Dr. Sepaniak for his guidance and patience, which I know was trying at times. I would also like to thank the other committee members, Dr. Chambers and Dr. Barnes for their comments and time. I would like to express my thanks to Tracey Staller, who seemed to have all the answers. I would also like to thank the other group members Beth Colburn, Christy Copper, and Brian Clark. I would like to thank The University of Tennessee for the assistantship and science alliance position, which made this degree possible. I would like to express my deep gratitude to my parents, Wesley and Annie Holland, who kept reminding me this degree was possible, and to my other family members: Mike, Jeromy, Coy, Judy, Brandon, Jessica, Ricky, Lora, Little Rick, Judd, Scotty, and Julie.

ABSTRACT

Analytical methodologies are presented herein that evaluate and improve the qualitative characteristics of micellar electrokinetic capillary chromatography (MECC). Qualitative analysis in MECC benefits from the facile manner in which retention can be manipulated by altering mobile phase composition. By comparing solute retention times, from standard and sample solutions separated using more than one set of MECC conditions, peak identification is rendered more reliable and the problems with matrix interferences are reduced. The methodologies in this work are applied to 10 common mycotoxins.

The first phase of this work consisted of determining two sets of optimized mobile phase conditions, each providing complete resolution and unique selectivity towards the mycotoxins and evaluating reproducibility. This was accomplished by investigating the effects of micelle type, pH, and organic modifier and cyclodextrin mobile phase additives on retention of the mycotoxins. Replicate separations of the mycotoxins using the two mobile phase systems were carried out in both a consecutive and alternate manner (between the two systems) to establish retention time coefficients of variations (CVs). By normalizing a solute's retention time (t_r) to an adjacent-eluting solute, retention time CVs averaging less than 1 % were obtained. Two fully-resolved chromatograms (one using each mobile system) of the 10 mycotoxins could be obtained, including

system rinsing and equilibration, in less than 45 minutes.

The second phase of this work consisted of applying this methodology to the qualitative analyses of 5 randomly-generated mycotoxin/interferent mixtures (unknowns). Solute identification was based on retention data, which was reported using the following procedures: [1] measuring t_r from injection point to peak maximum, [2] calculating the solute's capacity factor, [3] utilizing the t_m marker (Sudan III added to each unknown) as a normalization standard, and [4] utilizing t_m and a spiked mycotoxin, that eluted roughly midpoint in the MECC elution window, as normalization standards. Identifications of the unknowns were based on elution within allotted tolerance windows. The window positions were established via the injections of standard mycotoxin mixtures, while tolerances were based on average CVs from the reproducibility study. The two systems were also used in tandem, i.e., solute identification required aggreement with both mobile phase's retention criteria.

The successful identification of solutes in the unknown mixtures was found to depend on the normalization procedure employed. In particular, a normalization method that had the solute and it's normalization standard eluting in proximity was determined to be important. This identification criteria was most closely accomplished by applying method [4]. The reduction of mis-identification also required the tandem utilization of both mobile

phase systems. The combining of normalization method [4] and tandem mobile phase identification, allowed all toxins from the 5 samples to be identified without a single mis-identification.

TABLE OF CONTENTS

CHAPTER PAGE

1. INTRODUCTION....1
   - Brief History of Chromatography....1
   - Basis for Electrophoretic Separation....2
   - The Development of Electrokinetic Separations....4
   - Extending the utility of CZE....8
   - Micellar Electrokinetic Capillary Chromatography....9
   - Limited Elution Range of MECC....10
   - Advantages of MECC....14
   - Statement of Problem....17

2. EXPERIMENTAL CONSIDERATIONS....20
   - Introduction....20
   - General Arrangement of Apparatus....20
     - *Columns*....21
     - *Injection*....23
     - *Detection*....25
     - *Applied Voltage*....26
   - Mobile Phase....27
   - Pseudo-Stationary Phase....28
   - Separation....29

Applications.....30

3. QUALITATIVE ANALYSIS OF MYCOTOXINS USING MECC.....31

Introduction.....31

Experimental Section.....35

Chemicals.....35

Chromatography (Apparatus and General Operation).....36

Determining Separation Conditions.....37

Reproducibility.....38

Qualitative Capabilities.....40

Safety precaution.....41

Results and Discussion.....41

Hydrophobic Effects.....42

pH Effects.....45

Cyclodextrin Additives.....46

Selecting Separation Conditions.....48

Reproducibility.....51

Qualitative Analysis of Mycotoxin Mixtures.....54

4. CONCLUSION.....58

REFERENCES.....60

VITA.....66

LIST OF FIGURES

Figure		Page
1	Depiction of diffuse double layer and direction of solvent flow	4
2	Depiction of velocity difference for electroosmotic flow solute, and micelle	10
3	Depiction of elution window associated with MECC	11
4	Depiction of solute migration with plug-like and parabolic flow profiles	16
5	Depiction of MECC (or CZE) apparatus	21
6	Depiction of mycotoxin structures	33
7	Effects of adding acetonitrile to the SDS/buffer system	43
8	Effects of adding acetonitrile to the NaDC/buffer system	43
9	Effects of changing SDS/buffer systems pH	46
10	Effects of adding cyclodextrins to SDS/buffer system	47
11	Electropherograms of the 10 mycotoxins depicted in Figure 6. Conditions presented in Experimental Section. **Top**: SDS-mobile phase **Bottom**: NaDC-mobile phase	50

CHAPTER 1

INTRODUCTION

Brief History of Chromatography

Chromatography was first introduced in 1905 when Ramsey separated gases as they passed over solid supports (1). The next year Tswett (2) separated plant pigments in a chromatographic column and christened the technique chromatography ("color writing"). The science of chromatography has grown enormously since 1905 and has been mainly classified in two categories: gas chromatography (GC) and liquid chromatography (LC). There are several branches related to these two techniques resulting from nearly a century of development, but the basic separation mechanism has stayed practically the same. This mechanism involves the differential distribution of the solutes between the stationary phase and the mobile phase. GC separates gaseous solutes as they are carried through the column by the mobile phase (carrier gas) and differentially interact with the stationary phase. This requires that the solutes be thermally stable and more volatile than the stationary phase. The carrier gas is usually inert and has little or no interaction with the solutes other than carrying them through the column. LC does not require solute thermal stability at elevated temperatures, and both phases usually interact selectively with the solutes.

GC and LC carry the solutes through the column under the influence of an applied pressure. Another means of causing solvent-solute flow is by electrokinetically pumping it through the column. This type of flow was first introduced in 1809 when Reuss saw movement of clay particles under the influence of an electric field (3). In 1937, Tiselius applied this technique to the separation of proteins (4). His report described the migration of proteins in a large U-shaped tube under the influence of an electric field. The proteins were separated based on their electrophoretic mobilities, which resulted in a series of migrating boundaries, i.e., creating a separation method referred to as moving boundary electrophoresis. This separation method has been replaced by a method known as zone electrophoresis in which the solutes are introduced into the separation medium as a narrow solute plug and differentially migrate as discrete zones (5).

Basis for Electrophoretic Separations

Zone electrophoretic separations are based on differences in solute migration velocities (6) toward a particular electrode, i.e., cathode (-) or anode (+). In its most common configuration, electrophoresis is carried out by injecting the solute sample at the anode end and detecting the separated components at the cathode end. The net velocity of the solute (v_S) in an electric field (E) is given by the sum of the electrophoretic velocity of the solute (v_{ep}) and the electroosmotic velocity (v_{eo}), as shown in Equation 1. The proportionality factors relating these velocity terms to the electric

field are referred to as the solute electrophoretic mobility (μ_{ep}) and the electroosmotic mobility (μ_{eo}).

$$v_s = v_{ep} + v_{eo} = (\mu_{ep} + \mu_{eo})\, E \qquad [1]$$

As equation 1 indicates, electroosmotic flow must be larger than the velocity of any negative charged ions in order for their net migration to be towards the detector (located at the cathode end of the separation medium). This can be accomplished by adjusting the parameters that effect electroosmotic flow (see below). Neutral molecules are also carried towards the detector (5), but usually not resolved from other neutral solutes (i.e., they all possess $\mu_{ep} = 0$).

Electroosmotic flow (electroosmosis) is defined as the flow of solvent in an applied electric field. Electroosmotic mobility is influenced by a diffuse double layer along the column wall (7). Fused silica columns are commonly used for electrophoretic separations (see below) and under certain buffering conditions a negative layer forms along the column wall. This layer is a result of the silanol groups being ionized, i.e., Si-OH $\rightleftharpoons$ Si-O^-. A diffuse double layer is produced when counter ions from the buffering solution are attracted to this negative layer. Anions and cations also exist in the bulk solvent. The more distant counter ions (relative to the capillary surface) migrate towards the electrode of opposite charge, pulling solvent with them, i.e., electroosmosis. (Refer to Figure 1.) The magnitude of electrosmotic flow is determined primarily by the applied voltage and the potential difference of the

diffuse double layer (zeta potential), which is influenced by the concentration and pH of the buffer system (8). The viscosity and permitivity of the mobile phase also influences the magnitude of electroosmotic flow as depicted in equation 2:

$$V_{eo} = \frac{-\varepsilon\zeta E}{\eta} \qquad [2]$$

where ε is the permitivity of the mobile phase, ζ is the zeta potential, E is the applied potential, and η is the viscosity of the mobile phase.

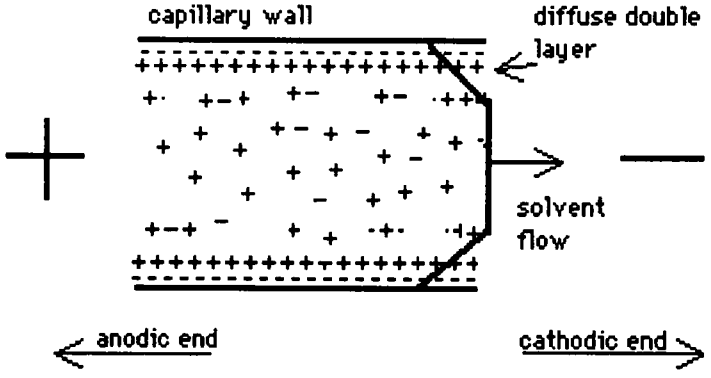

Figure 1: Depiction of diffuse double layer and direction of solvent flow.

The Development of Electrokinetic Separations

Electrophoresis was slow in developing due to the generation of Joule heating caused by the applied voltage (E) and the current (I) produced, i.e., power (heat) = EI. This heat was poorly dissipated by the large columns used in the earlier stages of electrophoresis.

Large bore columns require that minimum voltages be applied. This resulted in longer analysis times for the smaller potentials and the possibility of incomplete separation of complex mixtures when using short columns. The major breakthrough allowing electrophoresis to become a competitive method of analytical separation was the utilization of capillary columns (6), i.e., capillary zone electrophoresis (CZE). These smaller bore columns were capable of dissipating the heat more efficiently (increase in solvent-column heat convection), thus allowing higher voltages to be applied. The use of capillary columns did lessen the problems of Joule heating, but also brought forth another factor impeding development of CZE, i.e., inadequate detection.

The most common technique for detecting solutes separated by CZE is absorbance spectrometry (9-12). The wide diversity of available light sources allows the choice of one that has an output that encompasses the absorption bands of the solute. This is in reference to Beer's law:

$$A = \varepsilon bC \qquad [3]$$

where A is the absorbance (AU), ε is the molar absorptivity of the solute (L mol^{-1} cm^{-1}), b is the optical path length (cm) and C is the concentration (M).

The optical path length has the most detrimental effect on the use of absorbance for detecting solutes separated by CZE. The minute band volumes (typically 10-100 nl range) associated with

CZE requires that on-column detection be used in order to prevent band dispersion. In this configuration the effective path length is approximately the inside diameter of the capillary (50 to 100 μm, typical size capillaries used for CZE with absorbance detection). The small b term results in small absorbance values. To compensate for this, light sources with wavelengths in the UV are usually used because many molecules have large molar absorptivities at these wavelengths. The consequences of using UV radiation for absorbance detection are the reduction of detector selectivity and also limitations on the type of column used, i.e., the columns must be transparent to UV light, such as fused silica.

The concentration of the solute could also be increased to increase absorbance values. However, if the concentration of the solute nears the solubility in the mobile phase, band dispersion can occur (13). Also, large solute plugs can result in regions with different conductive properties which can also degrade efficiency by producing a non-uniform field. Absorbance detection is further complicated by the amount of stray light associated with passing radiation through such a small aperature.

Another technique that has been widely used for detecting solutes separated by CZE is fluorescence (14), mainly laser based (15-18). The problems associated with absorbance detection are lessened when using laser based fluorescence detection. The ease with which laser beams can be focused to small diameters (decreasing stray light) makes them ideal sources for CZE detection. The higher excitation power of lasers relative to conventional light

sources also makes use of the fluorescence advantage as shown in equation 4:

$$P_f = P_{ex} \Phi k \varepsilon b c \qquad [4]$$

where P_f is the fluorescence signal, P_{ex} is the excitation source power, Φ is the quantum efficiency of the fluorophore and k is the fraction of fluorescence detected. By incorporating lasers as the excitation source larger fluorescence signals can be obtained. The ability to collect the signal at right angles also reduces background interferences from the excitation source.

The use of lasers has resulted in a linear dynamic ranges of 10^{-3} - 10^{-7} M with detection as low as 2 femtomoles reported (19-20). Another report was stated to have a detection limit of 10 attomoles (21). The downside of this technique is its inability to detect non-fluorophores and/or ones with low quantum efficiencies (Φ). This problem can be circumvented by alterations of the solute or by changing characteristics of the mobile phase, i.e., pre- or post-column derivation, or by indirect fluorescence. Pre- or post-column derivation is usually carried out by chemically modifying the solute to increase its quantum efficiency or by specifically labeling the solute with a fluorophore (22). Indirect fluorescence is usually carried out by mixing a fluorophore with the mobile phase (21). The solute displaces the fluorophore in the mobile phase and produces a decrease in the signal. All of these methods can increase analysis times and in some cases complicate chromatograms. Also,

when considering laser-based detection there is the problem of obtaining a wavelength complementary to the molar absorptivity of the solute.

CZE is not limited to absorbance or fluorescence detection. One of the advantages of electrokinetic separations is that most detection techniques used for conventional methods can be modified for CZE. Others techniques such as mass spectrometry (23), electrochemistry (24) and conductivity techniques (25) have also been employed. Cost is usually a major factor when considering the best detection for CZE.

Extending the Utility of CZE

CZE is becoming a popular technique for analytical separations especially in biological (26,27) applications. This is due primarily to its high efficiency and ease of operation. However, the use of CZE is limited to separating charged solutes and is not applicable to the separation of the very abundant neutral compounds, found in many samples of biological, environmental, and industrial origin. To separate these molecules, micelles have been added to the mobile phase. This method was first introduced by Terabe and co-workers in 1984 (12) and has since then been coined micellar electrokinetic capillary chromatography (MECC) (28). The major difference between CZE and MECC is the addition of micelles to the mobile phase which provides a two phase separation mechanism. The instrumental arrangement remains the same, so detection

considerations mentioned above also apply. Refer to Chapter 2 for a diagram of apparatus.

Micellar Electrokinetic Capillary Chromatography

MECC separations are carried out by introducing surfactant ions into the running buffer. Micelles are formed when surfactant concentration exceeds the critical micelle concentration (CMC) (29). The most common surfactants used, sodium dodecyl sulfate (SDS) and sodium deoxycholate (NaDC), consist of a hydrophobic region and a hydrophilic region (30). The negative charge associated with these micelles causes them to migrate against electroosmotic flow. As with CZE, electroosmotic flow can be adjusted to cause the net micelle migration to be in the same direction as electroosmotic flow, but at a reduced velocity, as depicted in Figure 2. The different migration velocity between the micelles and electroosmotic flow provides a two-phase chromatographic system, similar to conventional methods. The slower moving micelle represents the pseudo-stationary phase and the running buffer represents the mobile phase. The solutes are separated based on their differential distribution between these two phases (30).

The structures and chemistry of the micelles mentioned above differ greatly. SDS is an *n*-alkyl surfactant that is reported to form *less orderly* arranged micelles, relative to the hydroxyl-substituted, steroidal NaDC surfactant (31). The SDS micelle has its hydrophobic region at the core and the ionic region pointing towards

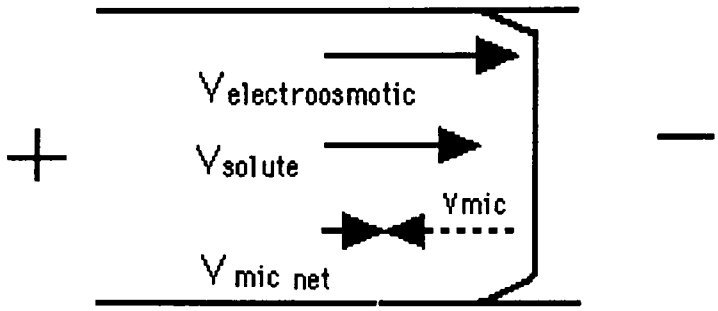

Figure 2. Depiction of velocity difference for electroosmotic flow, solute and micelle.

the bulk of solution. The NaDC surfactant forms micelles with polar hydroxyl groups pointing inwards (32). The aggregation numbers (surfactant molecules per micelle) also differ, 60 for the SDS and 14 for the NaDC micelle (31). The SDS micelle is also reported to be less polar than the NaDC micelle (33). This results in stronger association of the SDS micelle with molecules that are hydrophobic in nature. The differences between these micelles can be utilized to improve the qualitative characteristics of MECC, as will be discussed in Chapter 3.

Limited Elution Range of MECC

The major difference between MECC and conventional two phase methods is that the pseudo-stationary phase elutes from the column. This produces an elution window (refer to Figure 3) that limits the peak capacity (34), n, of this technique:

$$n = 1 + \frac{N^{\frac{1}{2}}}{4} \ln \frac{t_m}{t_o} \qquad [5]$$

where N is the number of theoretical plates, t_o is the migration time of non-retained components, and t_m is the migration time of the micelles. This limits the application of MECC since some very complex samples may not be separated.

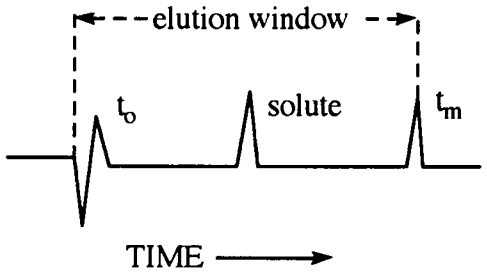

Figure 3. Depiction of elution window associated with MECC.

The resolution, Rs, expression is also effected by this limited elution window. Resolution in MECC is described by Equation 5:

$$Rs = \frac{N^{\frac{1}{2}}}{4}\left(\frac{\alpha - 1}{\alpha}\right)\left(\frac{k'_2}{1+k'_2}\right)\left(\frac{1 - t_o/t_m}{1+(t_o/t_m)k'_1}\right) \qquad [6]$$

where k'_1 and k'_2 are capacity factors (see Chapter 3) for two solutes and α is the selectivity factor (the ratio k'_2/k'_1). The equation includes an elution range parameter, t_o/t_m, which typically takes on values of 0.25 - 0.40. It is reported that a maximal resolution occurs when k' is between 1 and 5 (34). This could result in late eluting solutes (large k' values) being unresolved. In particular, a problem associated with very

hydrophobic solutes which completely associate with the micelles and co-elute at t_m.

There are two principal ways of dealing with the problems associated with the limited elution window. The window can be increased to accommodate complex samples. This can be done by decreasing electroosmotic flow, which decreases the net velocity of the micelles towards the cathode (detector), see Figure 2. This increases t_m and, as equation 4 indicates, an increase in the peak capacity of the system is observed. The problem of hydrophobic molecules co-eluting at t_m can be abated by decreasing their k' values, i.e., increasing their time spent in the mobile phase (relative to the micellar phase). When dealing with non-polar solutes, this can be done by decreasing the mobile phase polarity.

As mentioned above, electroosmotic flow is related to the potential difference of the diffuse double layer along the column wall (zeta potential). By decreasing this potential, electroosmotic flow can be decreased. This can be done by reducing the pH of the running buffer. At lower pH values the silanol groups are protonated which decreases the zeta potential and decreases electroosmotic flow (35). This decreases the net velocity of the micelles towards the cathode, which extends the elution window. Lowering the pH can have both positive and negative effects on MECC separations. The positive aspect is that the elution window can be extended possibly improving the separation of complex mixtures. The negative aspect is the possibility of adversely changing a solute's charge. This could

be detrimental to samples containing acid or base solutes (36) by possible changing their electrophoretic mobility.

The incorporation of certain organic solvents (e.g., methanol and 2-propanol) into the aqueous mobile phase can also extend the elution range. Organic solvents of this type increase the window by interacting with the negatively charged silanol groups along the column wall decreasing electroosmotic flow (37). They can also decrease the viscosity and dielectric constant of the aqueous mobile phase (38), both of which decreases the net velocity of the micelles towards the cathode. Using these solvents to extend the elution range increases analysis time. The CMC of the micelles is reported to increase with the addition of organic modifiers (30-31,39) and to become unstable in organic solvent levels greater than roughly 20% - 30% (v/v). This is seen more with SDS than with NaDC system.

Separation of solutes that completely associate with the micelles (e.g. hydrophobic molecules) can be improved by adding organic modifiers to the mobile phase such as the two alcohols mentioned above. Another organic modifier that has been used is acetonitrile (40). Acetonitrile does not extend the elution range to the degree the alcohols do. Acetonitrile decreases the aqueous mobile phase polarity which increases the mobile phases association with hydrophobic molecules. This results in a reduction of the capacity factor for hydrophobic compounds, by decreasing the amount of solute in the stationary phase relative to that in the mobile phase. The problem associated with this procedure is that

early eluting peaks can begin to co-elute. This may require that "gradient" incorporation of the organic modifier be applied (39,41-43). Acetonitrile also effects CMC, as the two organic modifiers discussed above.

Another way of changing the retention characteristics of a solute is by adding cyclodextrins (CD) to the mobile phase. These molecules have been used to successfully separate different types of enantiomers (44-46). It is reported that cyclodextrins (macro-cyclic glucopyranose molecules) are cylinder-shaped with an axial void-apolar cavity and an outer hydrophilic surface (47). The different types of CDs are characterized by the number of glucose units making up the "tea cup" shaped molecule, i.e., alpha (α-) containing 6 units, beta (β-) 7, and gamma (γ-) 8 (48). The size of the cavity (depending on the number of glucose units) and their associated chemical properties allow certain solutes to selectively interact with them. This interaction is assumed to be a result of solutes forming *inclusion complexes* with the CDs. The use of CDs results in the possibility of resolving two solutes that are very closely related.

Advantages of MECC

One of the most important characteristics of MECC is the ease of manipulating factors that effect the micellar- and/or mobile phases selectivity towards solutes. The selectivity of the pseudo-stationary phase can be changed by changing the type of micelles used, e.g., SDS and NaDC. Since this phase is introduced with the

mobile phase, installing a new column, as with conventional methods, is not necessary. The mobile phase can also be altered to change its selectivity, by addition of organic-modifiers, and/or by addition of cyclodextrins, as mentioned above. The facile manner and speed in which these conditions can be manipulated, to obtain unique selectivities towards certain solutes will be discussed in Chapter 3.

The hallmark of MECC and other electrokinetic separations is high efficiency (i.e., sharpness of solute bands) with theoretical plate numbers typically 10^5 - 10^6 /meter. The relation between efficiency and solute band width is shown by Equation 7:

$$N = 5.54\left(\frac{t_R}{W_{\frac{1}{2}}}\right) \qquad [7]$$

where "N" is number of theoretical plates, t_r is retention time of the solute, and "w" is solute band width at half height. The relation between efficiency and plate height is shown by Equation 8:

$$N = \frac{L}{H} \qquad [8]$$

where "L" is length of the column and "H" is plate height.

High efficiency can be attributed mainly to the plug-like solvent flow profile associated with these methods. For conventional methods, a parabolic velocity gradient is set up across

the diameter of the column, refer to Figure 4. The parabolic flow decreases efficiency due to resistance to mass transfer, i.e., resistance to mass transfer increases "H". Notice in Figure 4 that a solute must cross the velocity gradient many times in order to average out its velocity as it migrates down the column, i.e., to decrease band dispersion. One way to alleviate this problem is by decreasing the diameter of the column. For example, open capillary liquid chromatography (OCLC) plate heights are decreased dramatically as the columns i.d. is reduced (49). The reduction in capillary i.d. can increase efficiency, but puts additional burden on injection, detection, and column fabrication (50-51). The plug-like flow for MECC allows the use of larger columns, relative to OCLC, without the loss of efficiency. Because of the plug-like flow, the velocity gradient is virtually the same across the diameter of the column.

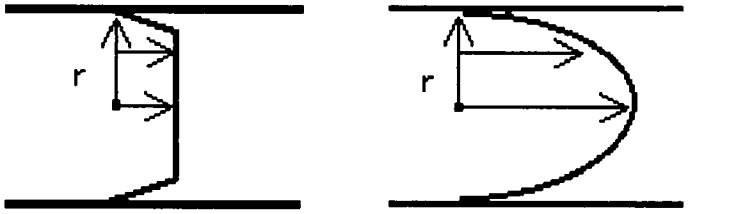

Figure 4: Depiction of solute migration with plug-like and parabolic flow profiles.

Another advantage associated with MECC is the speed of analysis. Cole *et al.* demonstrated the speed of MECC by very

efficiently separating four aflatoxins in under 20 seconds (52). This permits high sample throughput which can be very important when a large number of samples are to be analyzed, e.g., aflatoxin analysis (53-54). The cost of analyses can be very small due to the low volume of solvent used. For example, in our laboratory 2 ml disposable centrifuge tubes are used for solvent reservoirs, refer to Figure 5 Chapter 2. In an adjacent laboratory, 4 liter reservoirs are used for HPLC. This illustrates the cost advantage of MECC when solvent consumption and waste production are important. It is also possible to inject solutes from small volumes, e.g., injection from 10 μl volumes are possible (52). This allows even very expensive compounds to be investigated when using MECC.

Statement of Problem

A major criterion for any analytical technique is reproducibility, especially when the technique is to be used for qualitative analyses. Chromatographic techniques often rely on retention times (t_r) for identification. The t_r of the unknown is usually compared to that of a standard, t_r obtained under the same conditions, i.e., identification is based on the match of t_rs. Reproducibility between the two separations is very important for reliable solute identification. Any variation in separation parameters (see below) could change a solute's t_r making a comparison difficult. Another problem is mis-identifying the solutes especially when dealing with complex samples where certain interferences and/or other solutes could co-elute.

Electrokinetic separations, as with other separation techniques, are subject to certain factors that affect reproducibility. In particular, reproducibility is determined by factors that influence electroosmotic flow. As mentioned above, electroosmotic flow is related to the zeta potential produced in the diffuse double layer at the column wall. Any variation in this potential between separations can alter a solutes t_r. Among the subtle factors effecting zeta potential is the adsorption of sample components on the capillary wall. Proteins are particularly troublesome in this regard (26,27).

Another problem effecting electroosmotic flow is the fluctuation of temperature during the course of the separation. This factor has been addressed by different methods such as surrounding the column with some medium to control the changes in temperature (55) or introduce migration indices that compensate for the temperature variations (56). The latter was carried out by integrating the current over the length of the column as a function of time. This produced a migration index that compensated for the fluctuations in temperature and improved reproducibility.

Abundant literature is available on improving reproducibility for CZE, such as the two methods mentioned above. Other methods such as control of injection parameters (57), applying external fields to control electroosmotic flow (58) have also been employed. These techniques do control factors that might effect reproducibility and improve CZE's qualitative abilities, but as mentioned above, CZE is limited to charged solutes. Little attention

has been applied to MECC. The factors that effect reproducibility in MECC are more complicated. The CMC of micelles, micelle mobility, and solute partition coefficients are all temperature dependent and will contribute to irreproducibility.

The main objective of this work was to show that by utilizing the advantages of MECC, qualitative analysis could be done in a efficient and speedy manner. The was done without complicating the experimental apparatus, as required by some of the methods mentioned above. Poor reproducibility associated with MECC was addressed by applying different procedures to report data (refer to Chapter 3) and paying close attention to experimental procedures.

The first phase of this work was to determine two optimum conditions (mobile phase compositions) that have unique selectivities towards 10 common mycotoxins. One optimum condition utilized the SDS micelle as the pseudo-stationary phase and the other employed NaDC. The mobile phase was adjusted by changing its pH, by addition of acetonitrile and/or by addition of cyclodextrins. Once the two conditions were set, separations were repeated to establish reproducibility. The second phase involved using these conditions to qualitatively analyze randomly generated mycotoxin/interferent mixtures (see Chapter 3). The unknowns (mycotoxins) were determined to be present if their t_r fell within an allotted tolerance window using each set of optimized condition.

CHAPTER 2

EXPERIMENTAL CONSIDERATIONS

Introduction

This chapter deals with some of the experimental factors and procedures that are characteristic of electrokinetic separations. These experimental considerations will be discussed in a manner that pertain to this study and MECC. The main objective will be introducing the reader to the experimental apparatus and its operation. Another objective of this chapter will be to discuss some of the physical and chemical factors that effect separations.

General Arrangement of Apparatus

The apparatus used for this work is depicted in Figure 5. The power supply is a variable DC voltage source capable of supplying a constant voltage. The detector, absorbance based, has a tunable light source that operated from 190 to 800 nm using both deuterium and tungsten lamps. The instrument is a dual beam design with photo diodes used as both the signal detector and reference detector. The signal is processed and a chromatogram produced using a strip chart recorder at a chart speed of 10 mm/min.

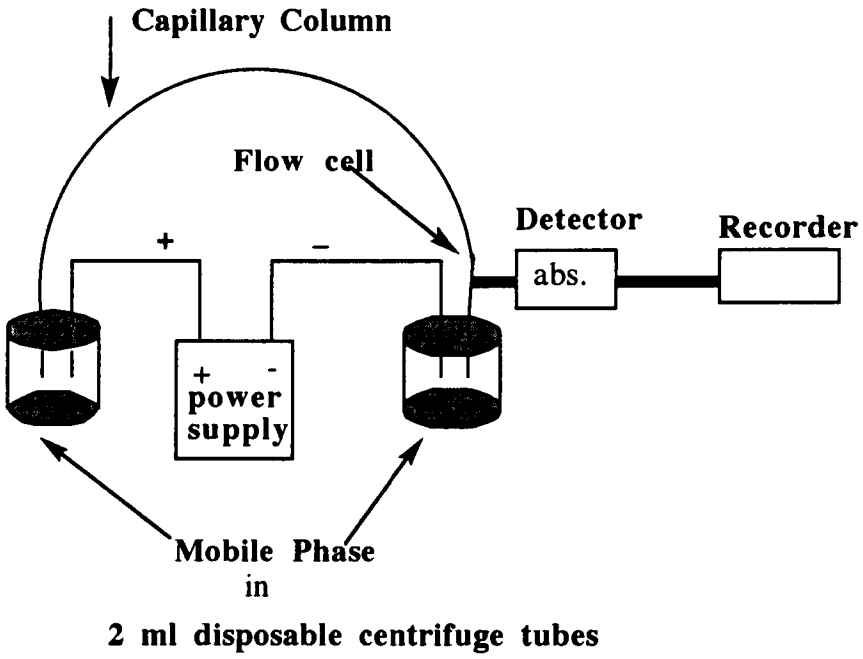

Figure 5: Depiction of MECC (or CZE) apparatus

Columns

The capillaries used throughout this work were made of fused silica. The column dimensions were 60 cm in length with an internal diameter (i.d.) of 50 μm and outside diameter (o.d.) of 365 μm. This length of the column was determined to be optimum for this study, refer to Chapter 3. The desired length of column was broken from larger roles that are purchased from Polymicro Technologies Phoenix, AZ.

The detection window was created, approximately 6 cm from the cathode (refer to Figure 5), by slightly charring 1 cm of the polymide coating with the small flame of a "BIC Lighter". The flame was applied gently to prevent melting the column. The charred portion was removed by slightly dragging it between the index

finger and thumb. This procedure was repeated until a clear detection window was obtained. To remove fingerprints and other residues, the window was wiped with lens tissue wetted with methanol. To the other end of the column, a luer lock needle was affixed with epoxy. The column extended approximately 1 cm from the plastic portion of the needle. The purpose of the needle was to introduce buffer and other solutions into the column using a luer lock syringe. The column was firmly secured into the detector flow cell. The column must be secure to prevent it from vibrating at high voltages. It is important to keep the ends of the column at equal heights during separations to prevent hydrostatic flow and deviations from the flat plug-like flow profile (59).

The columns were pre-treated and washed between each separation with NaOH, using the procedure described in Chapter 3. There is some controversy as to how often a column should be rinsed and with what concentration of base. As mentioned in Chapter 1, electroosmotic is affected by the diffuse double layer along the column wall. In order to have a "somewhat" uniform negative layer along the surface of the column it should be pre-washed with NaOH (or other methods see reference 30). The rinse between each separation is to expose new silanol groups and remove solutes that might adsorbed to the wall.

Most literature reports describe washing with 0.1 M NaOH. However, in this work, a 0.1 M solution degraded columns faster during the course of a study, (i.e., efficiency begins to degrade) relative to using 0.01 M solution. One possible explanation is that

the columns are becoming pitted with the higher concentration, resulting in a non-uniform buffer flow. Another explanation is an increase in contamination of the more exposed ionized silanol groups.

There are also differences in opinion on how often a column should be rinsed. This factor is mainly influenced by chemical properties of the sample being separated. For example, reproducibility is found to improve when using CZE to separate proteins by rinsing between each separation (26). The absorbed solutes effect electroosmotic flow by disrupting the diffuse double layer. This can also be a problem with MECC. This study involved separating both acidic and neutral solutes and required rinsing between each run in order to have acceptable reproducibility.

The decision on which concentration and the interval for rinsing mainly depends on the sample investigated. If separations require many rinses (solutes become absorbed on the wall), then the lower concentration should be considered. On the other hand if the solutes have little interaction with the wall then one rinse with the stronger concentration may be all that's required. The ease of changing these columns and their relative low cost also gives the option of installing a new one when efficiency begins to degrade. More information on rinsing protocol can be found elsewhere (30,60).

Injection

There are two common types of injections used for electrokinetic separations: hydrostatic and electroinjection.

Hydrostatic injections consist of placing the anodic end of the column in the sample and elevating above the cathodic end for a particular time period. The solutes enter the column due to a pressure difference between the ends of the column. Electroinjection is carried out by placing the column and positive electrode in the sample and applying a voltage for a period of time. The solutes enter the column based on their net electrophoretic mobilities.

The sample usually mandates the type of injection to be used. For example, if the sample contains both charged and neutral species, then hydrostatic injection is preferred over electroinjection. This is to prevent solutes from being discriminated against based on their electrophoretic mobilities. Solutes with positive electrophoretic mobilities would be injected at a much higher concentration than solutes with a negative or no electrophoretic mobilities. If the sample contained only neutral or ideally the same charged species then electroinjection could be warranted. Rose and Jorgenson (61) studied each method quantitatively and found that electroinjection could be performed with a reproducibility of 4.1 % RSD and hydrostatic 2.9 %. Both types of injections were done using automated systems.

The size of the injection plug does have some effect on the efficiency of electrokinetic separations. It is reported that long solute plugs can result in broad peaks (62). Individual contributions to peak variance are additive (63), see below.

Detection

Some of the factors that affect capillary electrophoresis detection were introduced in Chapter 1. The small zone volume associated with electrokinetic separations require that on column detection be performed in order to decrease band dispersion from fittings, detector cells, etc., that is to decrease dead volume. As mentioned, this puts stringent limitations on the use of absorbance detection for electrophoresis. One way to compensate for the small zones is to inject at higher concentrations; but as stated earlier, this can lead to band broadening. Fused silica capillaries are transparent to both UV and visible lights. This eases some of the problems associated with absorbance detection since the wavelength can be selected to correspond with the highest molar absorptivity of the solute.

Absorbance detection is used most often for capillary electrophoresis and can have impressive absolute limits of detection (LODs); LODs as low as 18 femtomoles have been reported (64). Other detection methods have been reported to yield lower LODs, but absorbance is the most popular technique owing to its universal nature. As mentioned, most detectors for conventional techniques can be adapted to electrophoresis. The major criteria for the detector are a low effective volume and high sensitivity. The use of short detector time constants are recommended to minimize the detector's temporal contribution to peak variance.

Applied Voltage

Figure 5 shows how the voltage source was set up for this study. The positive electrode is at the injection end of the column and the negative electrode at the detector end. The positive and negative cables are flexible so they can be easily positioned around the separation apparatus. Alligator clips are affixed to the cable ends so electrodes can be attached and inserted into the mobile phase reservoirs. It is important that these electrodes can be easily removed so mobile phase solutions can be changed if warranted. The platinum wire electrodes that were employed in this work did not seem to be effected by the buffer, sample, or high voltages.

The major parameter that affects electrophoretic separations is the voltage applied across the column. Efficiency of the separation is reported to be directly proportional to the applied voltage (30). At low voltages, solutes may have the chance to diffuse along the axis of the column (longitudinal diffusion), resulting in band dispersion. As the voltage is increased, the solutes spend less time in the column and efficiency is increased. This relationship will continue until the columns heat dissipating capabilities are exceeded (52). It is reported, that beyond the optimum field strength value, efficiency begins to degrade due to resistance to mass transfer (40) and, more importantly, thermal overload.

The optimum voltage for any separation will have to be determined empirically for it can vary from system to system. Since fast analysis and high efficiency are usually wanted, the

higher voltages are most often used, but should be employed with caution. In the work reported in reference 52 it was stated that the limited maximum voltage that can be applied to a 50 μm column is roughly 300-400 v/cm. Beyond this limit, efficiency begins to degrade. This is also influenced by the amount of current flowing through the column, i.e., large currents cause more heat to be generated, see Chapter 1. The important requirement is to have a voltage source that produces a consistent voltage during the course of the separation. If voltages fluctuate during the course of the separation, then retention time reproducibility and efficiency can be affected. It was very important when conducting this study to observe the current as the voltage was applied. This gave some indication of how the capillary column was behaving and, more importantly, to see if there was electroosmotic flow (no current no flow).

Mobile Phase

The mobile phase reservoirs used for this study were two 2 ml disposable centrifuge tubes, refer to Figure 5. The mobile phase and pseudo-stationary phases (see below) were made up in 25 ml stock solutions so the reservoir could be changed when warranted. The concentration and pH of the mobile phase are very important in electrophoretic separations. High concentrations of buffer solutions are reported to result in large electrophoretic currents and cause band broadening due to Joule heating (30). At low concentrations electroosmotic flow can be decreased. It is also reported that at

low concentrations retention time reproducibility can be affected, possible due to surfactant wall interaction (30). Moreover, at the low buffer concentrations, there is the possibility of producing regions within the capillary with different conductive properties, (particular in the vicinity solute bands). This can cause distortion in the electric field and produce very asymmetric solute bands (5). To minimize this distortion, it is recommended that the concentration of the buffer ions exceed the solutes concentration by at least 1000-fold (9, 65).

The pH of the mobile phase is also very important. As mentioned in Chapter 1, the pH can be adjusted to cause changes in electroosmotic flow. The pH can also affect the electrophoretic mobilities of solutes that are acidic or basic in nature, see Chapter 3. Mobile phase pH, mobile phase parameters, should be adjusted to meet the needs of the separation at hand.

Pseudo-Stationary Phase

The pseudo-stationary phase volume is determined by the concentration of the surfactants, which must be kept considerably above the critical micelle concentration (CMC). When the surfactant concentration is only slightly greater than the CMC, the adverse effects of the micelle polydispersity can lead to severe solute band broadening (30). Higher concentrations of surfactants can lead to Joule heating due to an increase in conductance of the mobile phase. The two micelles used for the pseudo-stationary phase in this study were sodium dodecyl sulfate (SDS) and sodium deoxycholate (NaDC).

The CMC of both of these micelles is reported to be approximately 0.005 M, but this concentration can be effected by an increase in temperature and mobile phase additives, as mentioned in Chapter 1.

The two micelles used for this study differ greatly in their properties (see Chapter 1). The SDS micelle is very non-polar which makes it best suited for solutes that are slightly polar in nature. This allows solutes to interact with both the aqueous mobile phase and the micelles. When using SDS to separate hydrophobic molecules, the solutes completely associate with the micelles and elute at or near t_m. The NaDC micelle (a bile salt surfactant) is more polar than the SDS micelle and is usually a good choice for hydrophobic compounds. Details on the uses of these micelles along with other surfactants in MECC, can be found in reference 30.

Separation

There were some procedures used throughout this study which served to improve reproducibility. Care was used to insure the height difference between the two ends of the capillary were consistent for each injection. This was done by attaching a sample holder exactly 10 cm above the cathodic end of the capillary. The sample container and anodic end of the capillary were brought to this point for each injection. Care was also used to be consistent with timing injections. Both time and height difference of injection can influence the size of injected solute plugs, which can effect peak shapes, see above. The injection end of the capillary was also washed with HPLC water (after injection) to prevent contamination.

Care was also used to be consistent with regard to base washes and equilibration times, see Chapter 3.

The two optimized mobile phases used in this study contained small amounts of organic modifier so evaporation was a problem. It was observed that by changing the mobile phase reservoirs between each separation reproducibility could be improved. Holes were also drilled into the caps of the disposable centrifuge tubes to insert the capillary and electrode. This allowed the caps to be closed and further decreased evaporation.

Applications

MECC is a relative new technique of separation. Although there are a fair number of reported applications of MECC, the chances of finding information in the literature that defines conditions for a given new application is relatively slim. This mandates that an empirical approach be employed when establishing optimum conditions for a particular separation. The facile manner at which conditions can be changed when using MECC makes finding these conditions less of a problem. This approach was applied to the separation of ten common mycotoxins, as will be described in Chapter 3.

CHAPTER 3

QUALITATIVE ANALYSIS OF MYCOTOXINS USING MECC

Introduction

Micellar electrokinetic capillary chromatography (MECC), and its progenitor technique capillary zone electrophoresis (CZE), are well-documented as useful tools for separations of biological compounds (26,41,66). CZE separates ionic species based on differences in electrophoretic mobility (6). By incorporating charged micelles in the capillary system, neutral species can be separated based on their differential distribution between electrokinetically-migrating mobile and micellar phases (12). The utility of CZE/MECC in bioanalysis can be attributed to the ubiquity of ionic and water soluble neutral compounds in samples of biological origin. Through the use of relatively polar micellar systems (e.g., those employing bile salt surfactants), and mixed aqueous-organic mobile phases, it has been possible to broaden the scope of those techniques to include separations of moderately hydrophobic molecules (31). In this manner, reported herein is the use of MECC in the separation of mycotoxins, a common class of environmental toxins.

Mycotoxins are secondary metabolites of various fungi and are considered among the most toxic of naturally occurring compounds; many are involved in the etiology of certain human and animal diseases (53). Typically, the ten mycotoxins chosen for this study would not be found in the same sample matrix, although most can be

found in a wide variety of foodstuffs (67). Mycotoxins have undoubtedly presented a hazard to human health since the earliest times, and this threat can only become more important as food demands increase with growing population (67). Structures of the mycotoxins studied herein are depicted in Figure 6. The diversity of structural features and sample matrices for these toxins complicates their separation. Since there is a need to reliably analyze large numbers of samples (53,54), economy and high analysis throughput are also important considerations. The most commonly used techniques, thin layer chromatography and liquid chromatography (68), are time consuming, labor intensive, and generally do not provide the superior separation performance of CZE/MECC. The limitations of existing methods represents the motivation behind developing MECC methodologies for separations of this important class of environmental pollutants.

Many of the attributes of MECC are evident in these studies. The hallmark of capillary electrokinetic techniques is high efficiency (69). Plate numbers of about 200,000 facilitate the complete resolution of the mycotoxins in 12-minute separations. However, by emphasizing conditions that provide for rapid analysis, sub-minute separations are possible (52). Under such conditions, very high sample throughput should be possible. The low operational cost of MECC relative to conventional methods is also of potential importance. In particular, the minute amount of mobile phase used and waste generated, when using MECC, substantially decreases analysis expense, see Chapter 1.

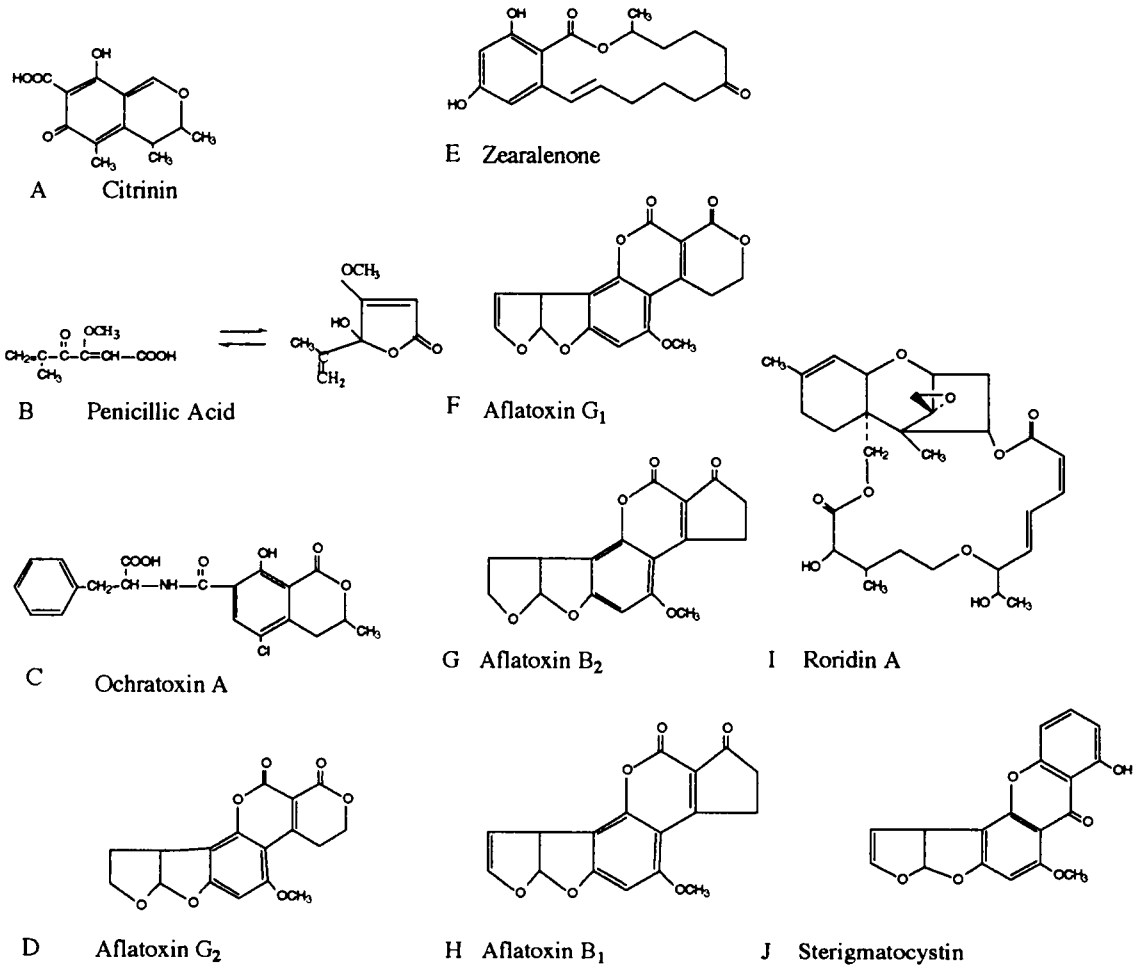

Figure 6: Depiction of mycotoxin structures.

A major advantage of the MECC technique is the facile manner in which retention can be manipulated through simple adjustment of the composition of the mobile phase (30). Both the primary (mobile) and secondary (micellar) phases can be rapidly changed to provide dramatic or subtle changes in retention, in pursuit of a given separation. The effects of micelle type, organic solvents, and various mobile phase additives were discussed in Chapter 1 (see ref. 30). This characteristic has been exploited in this work in two ways. First, the contingency of matrix interferences mandates that predictable changes in mycotoxin retention can be implemented to eliminate co-elution. To accommodate this practical consideration, the influences of micelle-type, mixed aqueous-organic mobile phases, pH, and cyclodextrin additives on retention are experimentally determined and discussed.

Second, the qualitative capabilities of the analysis are enhanced by rapidly changing between separation conditions that exhibit greatly differing selectivity for the mycotoxins. It is shown that this can be accomplished by simple adjustment of mobile phase composition; i.e., it is not necessary to install a new column as with conventional chromatographic techniques. Two distinctive, fully-resolved chromatograms of the ten mycotoxins are obtained in a period of about 45 minutes, including system rinsing and equilibration. Comparing the retention characteristics of sample and standard components under differing MECC conditions increases the reliability of peak identification. Proper identification is also

critically dependent on retention reproducibility, an issue that is of general concern in CZE, see Chapter 1. Using laboratory assembled apparatus, manual operation, and employing a simple procedure involving normalizing to *adjacent-eluting* mycotoxins, the coefficient of variation (CV) of retention time is found to average less than 1% for separations of mycotoxin standards. The qualitative characteristics of this methodology are evaluated by analyzing randomly-generated mycotoxin-interferent mixtures.

Experimental Section

Chemicals

Mycotoxin standards were purchased from Baxter Healthcare Corp. (Stone Mountain, GA) and Sigma Chemical Co. (St Louis, MO). The surfactants, sodium dodecyl sulfate (SDS) and sodium deoxycholate (NaDC), were purchased from Sigma, as were cyclodextrins (α-CD, β-CD and γ-CD). All water and solvents were HPLC grade and obtained from Baxter.

The acidic mycotoxins (as labeled in text) citrinin (a), penicillic acid (b), ochratoxin A (c) and the neutral mycotoxins zearalenone (e), aflatoxins G_1 (d), G_2 (f), B_1 (g), and B_2 (h), roridin A (i), and sterigmatocystin (j) were received in separate septum vials. The assignment acidic (which implies the potential of charge) and neutral is based on a previous report by Gorst-Allman and Stern (70). One mg/ml solutions in acetonitrile were prepared by injecting the appropriate amount of solvent into vials as they were received. The appropriate volumes of the mycotoxins were then withdrawn from

the septum vial with a 100 μl syringe, dispensed into 2 ml disposable centrifuge tubes, and diluted to 0.5 ml with the mobile phase to yield 1 X 10^{-4} M concentrations. In some cases sample mixtures also contained benzo(a)pyrene (B(a)P) and/or Sudan III (2 X 10^{-4} M) to mark the micelle migration time, t_m. The t_m markers were purchased from Aldrich (Milwaukee, WI) and Eastman Kodak (Rochester, NY), respectively.

Chromatography (Apparatus and General Operation)

The general arrangement of the MECC apparatus was described in Chapters 1 and 2 and depicted in Figure 5. Prior to each injection, the capillaries (50 μm internal diameter, 60 cm in length, 53.5 cm to detection window, purchased from Polymicro Technologies Phoenix, AZ), were rinsed 5 minutes with 0.01 M NaOH, 1 minute with H_2O, then filled with the desired mobile phase. As a final step, a voltage of about 20 kV (using a Hipotronics model 840 A power supply Brewster, NY) was applied for 5 minutes. This equilibration procedure was carried out between separations. The mobile phases were prepared by mixing the appropriate amount of SDS or NaDC with phosphate/borate buffer to obtain an aqueous solution with concentrations of 0.05 M SDS or 0.05 M NaDC, 0.01 M Na_2HPO_4 and 0.006 M $Na_2B_4O_7$. The organic modifier study was conducted by adding acetonitrile to the SDS- or NaDC-buffer conditions to result in a 0, 5, 10 or 15 v/v % mixed aqueous-organic mobile phase. The cyclodextrin/SDS-buffer conditions were made 7 mM in CD. The pH study was carried out by adjusting the SDS-buffer condition with concentrated NaOH or concentrated H_3PO_4 to obtain the desired pH,

as measured by using a Fisher model 810 pH meter. Injections were performed hydrostatically by placing the anodic end of the capillary into the sample and elevating 10 cm above the cathodic end for 15 seconds. A Linear Corporation (Reno, Nevada) Model 204 spectrophotometer, set at a wavelength of 254 nm, was used for detecting the mycotoxins. Separations were performed using an applied voltage of 20 kV.

Determining Separation Conditions

The effects of changing mobile phase composition on mycotoxin retention were studied using both the SDS- and NaDC-buffer conditions. Separations using 0, 5, 10, and 15 % v/v acetonitrile/SDS-buffer conditions were performed by injecting the standard mycotoxin solution (see above) with B(a)P used as a t_m marker. Straight line plots of *approximate* log capacity factors, k', versus percent acetonitrile were constructed using an Apple Macintosh Classic II Computer and Delta graph Software. This procedure was repeated using the NaDC-buffer condition. Capacity factors can only be reported as approximate values due to incomplete association of the t_m marker with the micelles (30), particularly with the mobile phase additives used in these studies. Approximate capacity factor's were calculated using the expression:

$$k' = \frac{t_r - t_o}{t_o (1 - t_r/t_m)} \qquad [9]$$

where t_r is the retention time of the mycotoxin and t_o is the solvent disturbance (migration time of non-retained components).

Studies of mobile phase pH and the presence of different cyclodextrin additives were conducted in a manner similar to that used to evaluate mixed aqueous-organic mobile phases. However, plots of log k' versus CD type were not constructed due to the extreme effects of γ-CD on the retention of the t_m marker. Instead, plots of t_r versus CD were constructed.

Once the elution order of each mycotoxin was assigned for each mobile phase (by repeated injections and standard spiking), duplicate separations were used to determine retention characteristics. Inspection of retention data permitted the establishment of two sets of conditions (see discussion below), each yielding complete resolution of the mycotoxins, but with distinctive selectivity. These two mobile phase systems will be referred to as the SDS-mobile phase (SDS and buffer conditions described plus 2.5 % v/v acetonitrile and 7 mM γ- CD, adjusted to a pH of 9.3) or NaDC-mobile phase (NaDC and buffer conditions described above plus 7.0 % v/v acetonitrile, adjusted to a pH of 9.3) for the remainder of this report.

Reproducibility

Once the two sets of mobile phase conditions were determined, 14 separations (7 consecutively for each set) were performed using 5 selected mycotoxins as a test sample. The smaller sample was mandated by mycotoxin degradation (71) and/ or expense. The 5 mycotoxins were citrinin (a), zearalenone (e),

aflatoxin B_1 (g), roridin A (i), and sterigmatocystin (j). B(a)P and Sudan III were added to this sample as described earlier. The 14 separations were then repeated, this time by alternating between the two mobile phases. The CVs for each set of seven separations (SDS- or NaDC- mobile phase, consecutive or alternate procedures) were determined based on measurements of peak maxima retention times of the selected mycotoxins.

Reproducibility was also evaluated following normalization of retention data. This method involved adjusting a given mycotoxin retention time obtained from injections 2 through 7 in the series, to the retention time of the corresponding mycotoxin in the first injection by normalizing to adjacent-eluting mycotoxins. The following example (elution order as obtained with the SDS-mobile phase system) illustrates the normalization (see above for mycotoxin label identities).

$$t_r^*, a_2 = t_r, a_2 \, (t_r, e_1 / t_r, e_2) \qquad [10]$$

where:
t_r^*, a_2 is the normalized t_r of mycotoxin "a" from injection 2
t_r, a_2 is the measured t_r of mycotoxin "a" from injection 2
t_r, e_1 is the measured t_r of mycotoxin "e" from injection 1
t_r, e_2 is the measured t_r of mycotoxin "e" from injection 2

The last eluting mycotoxin was normalized using the t_m marker in the same manner. These t_r values, including the t_r from the first injection, were used to determine "normalized" CVs.

Qualitative Capabilities

The qualitative capabilities of mycotoxin analysis by MECC were evaluated by analyzing randomly generated mycotoxin-interferent standard mixtures. The ten mycotoxins and 5 interferent compounds (phenol, benzene, naphthalene, anthracene and pyrene) were assigned numbers. A Macintosh computer program (random number selector, Microsoft Quick Basic version 1.0, copyright 1988) was used to generate 6-component number sets. From these number sets, 5 "unknown" mixtures were prepared by a colleague.

Qualitative results of the unknown mixtures were obtained by comparing duplicate separations of the unknowns and standard mixtures (using each mobile phase). The mycotoxins in the unknowns were stated present if their retention characteristics (see below) fell within the standard's allotted tolerance. The tolerances were established based on data collected in the reproducibility study. The identification procedure consisted of four different methods and the results reported as number of toxins identified, number not identified and number mis-identified. The first method simply consisted of measuring and comparing "t_rs" using the SDS- and NaDC-mobile phases individually. The results from the two mobile phases were also used in tandem (i.e., mycotoxin identification required satisfying retention tolerance criteria for both sets of mobile phases). The second method (using only the SDS-mobile phase) consisted of normalizing the peak's t_r to t_m. The third method consisted of spiking unknowns with a mycotoxin that eluted near the center of the MECC elution window. All retention times from peaks

eluting prior to the spiked toxin were normalized to it, and succeeding peaks normalized to t_m. These values were then compared in the same manner as the first method. The fourth method used k' for identification.

Safety precaution

Mycotoxins are considered to be extremely toxic, so caution should be exercised when working with these toxins (68). As mentioned, the toxins were prepared in the septum vial in which they were received by injecting the solvent with a disposable 1 ml syringe. The solutions were prepared under a vented hood and all work areas and instruments wiped down with 5 % NaOCl (bleach). Waste was also disposed of in bleach. Disposable latex gloves were worn at all times when working with the toxins. Benzo(a)pyrene was treated with the same care.

Results and Discussion

The capabilities of MECC for performing qualitative analysis are investigated and reported herein, based on the separations of mycotoxin mixtures. The rapid and simple manner by which separation conditions can be altered when using MECC has advantages for performing qualitative analysis. First, matrix interferent co-elution can be reduced by altering retention through manipulation of micelle-type, adjusting pH, utilizing aqueous-organic mobile phases, and adding cyclodextrins to the system. These and other changes in separation conditions can be accomplished without changing the instrumental arrangement. In

addition to reducing interferent problems, peak identification is rendered more reliable by separating samples using different conditions that exhibit unique selectivities.

Hydrophobic Effects

Several factors influence the retention characteristics of solutes separated by MECC. In general, the hydrophilic/hydrophobic character of the mobile and pseudo-stationary (micellar) phases has a large impact on separations. Optimum k' values for MECC generally fall in the range of 1-5 (34). Hydrophobic compounds tend to completely associate with the micelles (i.e., k' values are too large) and are not resolved. In such situations, increasing the organic content of the mobile phase will reduce k' and generally improve resolution. Unfortunately, micelles are not stable in mobile phases with a high organic solvent content (30).

The plots in Figure 7 and 8 illustrate the effect of adding acetonitrile to the mobile phase to reduce the k' values of the neutral, hydrophobic mycotoxins, d, e, f, g, h, i, and j, (refer to Figure 6 for structures and label identities). Notice the sharp decrease in k' as the acetonitrile concentration is increased. This can be attributed to the decrease in polarity of the mobile phase. It is also observed that a majority of the neutral mycotoxins exhibited a change in elution order, with respect to the acidic mycotoxins, when comparing the two micellar systems. This would be expected based on differences in properties of the two types of micelles. The SDS micelle is less polar than the NaDC micelle (33), resulting in

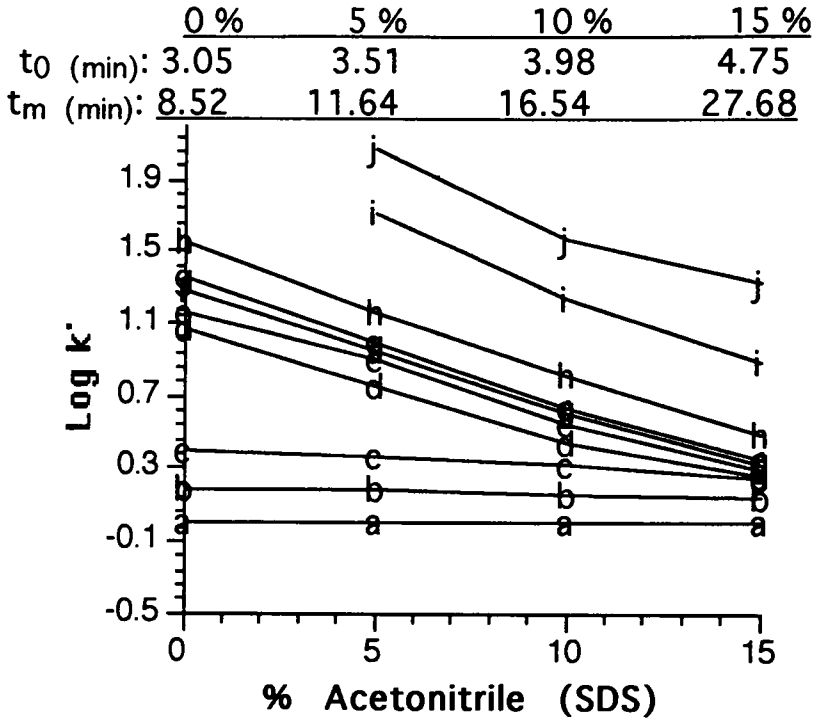

Figure 7: Effects of adding acetonitrile to the SDS/buffer system.

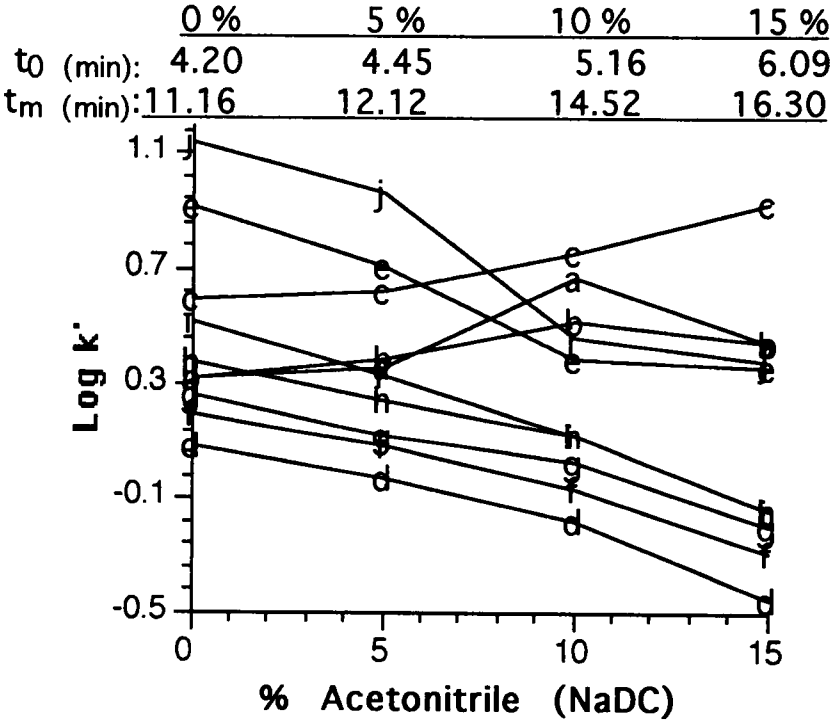

Figure 8: Effects of adding acetonitrile to the NaDC/buffer system.

stronger associations with the neutral, more hydrophobic toxins and weaker associations with the more polar, acidic toxins. This associative property is apparent in the k' values plotted in the figures. The neutral mycotoxins had considerably larger k' values for the SDS-buffer condition, relative to the NaDC system, even with 0 % acetonitrile. However, the opposite is true when comparing the acidic toxins between the two systems. The NaDC micelle is also reported to possess a helical structure (31). This *highly-ordered* assembly may be expected to exhibit different solute association properties than the *loosely-ordered* SDS micelle. This property is possibly apparent in the more disruptive changes in k' values for the NaDC-buffer condition, relative to the SDS system, as the concentration of acetonitrile increased.

As mentioned, the acidic mycotoxins a, b, and c did not show similar organic modifier related trends in k' between the SDS and NaDC systems. The very non-polar nature of SDS micelles results in little interaction with the acidic toxins (small k' values). This weak interaction is not appreciably influenced by the addition of acetonitrile. By employing the more polar NaDC micelles, the association between micelles and acidic toxins is increased (larger k' values) and, as seen in Figure 8, acetonitrile has a dramatic effect on k'. This discussion of acidic mycotoxin retention does not consider possible acid dissociation at the slightly alkaline pH used in the study, which would render these components negatively charged. Knowledge of the pka values would be required to give a more descriptive discussion of the retention of the acidic

mycotoxins. A negative electrophoretic mobility would manifest itself as an *apparent* k' value (i.e., $t_r > t_o$). However, the large difference in k' between the two systems provides compelling evidence of substantial mycotoxin-micelle association (at least with the NaDC micelles), and is likely the cause of the large organic solvent related retention changes.

pH Effects

Figure 9 illustrates retention characteristics of the mycotoxins upon changing the SDS-buffer condition pH over the range of 5.7 to 10.4. The k' values of mycotoxins "e" and "b" were significantly affected by the change in pH. Mycotoxin "e" (zearalenone) showed a dramatic decrease in k' with increasing pH. One possible explanation for this trend is that zearalenone is becoming partially charged at the higher pH values. Although reported as a neutral mycotoxin (70), one or both of the hydroxyl groups in zearalenone (refer to Figure 6) could become deprotonated resulting in coulombic repulsion of the micelle. Assuming its negative electrophoretic mobility is smaller than that of the micelle, zearalenone would appear to experience a decrease in k' (as observed). The increase in electroosmotic flow with increasing pH (refer to the top of Figure 9 for t_o information), would also contribute to this trend in zearalenone retention. Another mycotoxin affected by changes in pH was penicillic acid ("b"). This compound exhibited a sharp increase in k' between pH 5.7 and 7.0. One possible explanation for this trend is that the ring structure form of the

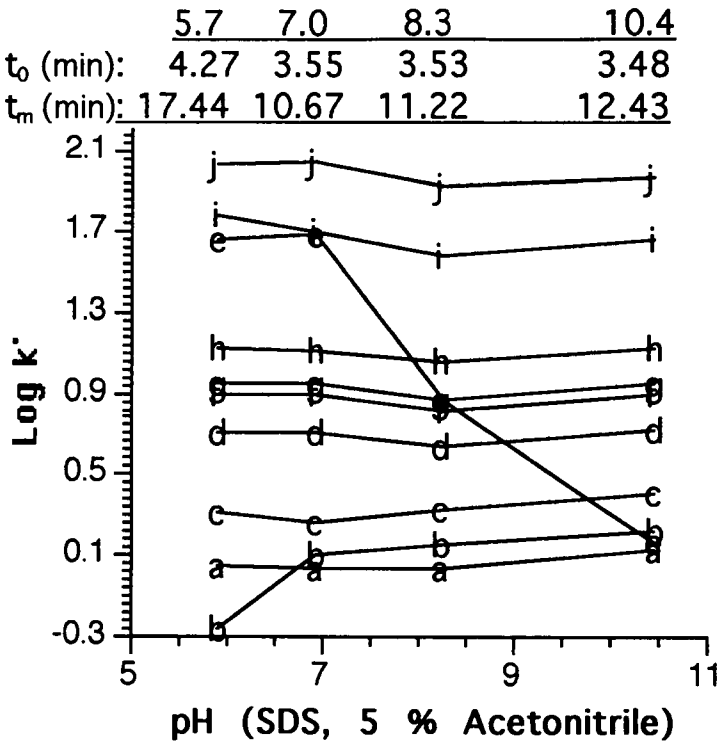

Figure 9: Effects of changing SDS/buffer system's pH.

molecule (see Figure 6) is favored at the higher pH, increasing its hydrophobicity and association with the SDS micelles. Structures and equilibrium shown in Figure 6 are compiled from standard chemistry handbooks (e.g., Merck Index, 11th Edition). Another explanation is that penicillic acid is deprotonated at the higher pH and exhibits a relative large negative electrophoretic mobility. The pH study was not conducted with the NaDC-buffer condition due to problems with precipitation (72).

Cyclodextrin Additives

Figure 10 illustrates the effects of various cyclodextrins on mycotoxin retention. For the most part, the addition of α-, β-, and γ-CD had only minimal effects. The one obvious exception is the

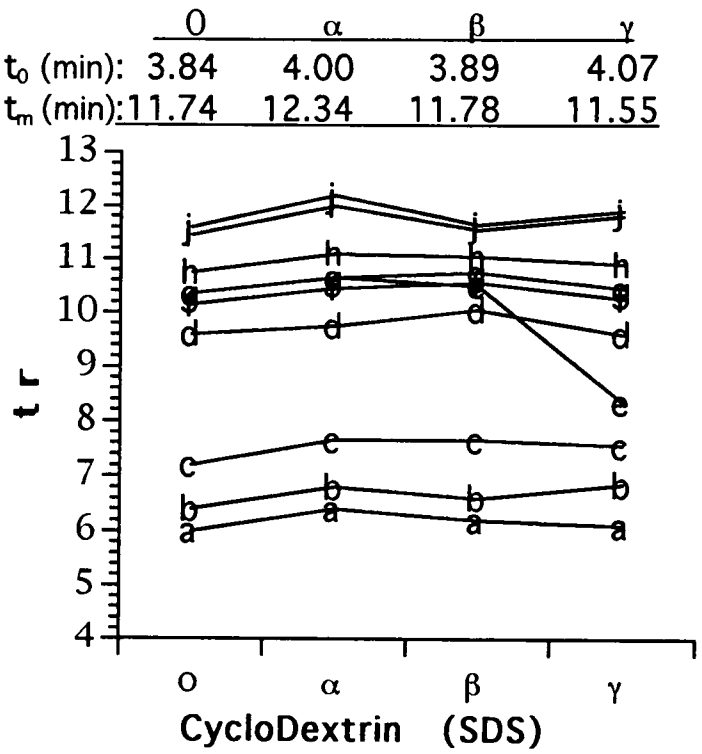

Figure 10: Effects of adding cyclodextrins to SDS/buffer system.

apparent strong interaction between γ-CD and zearalenone ("e"). The characteristics of γ-CD and structural features of zearalenone could explain this trend.

It is reported that cyclodextrins (macro-cyclic glucopyranose molecules) are cylinder-shaped with an axial void-apolar cavity and an outer hydrophilic surface (47). The most commonly occurring CDs consist of 6 (α-), 7 (β-), and 8 (γ-) glucopyranose units and have cavity dimensions of 0.57 nm, 0.78 nm, and 0.95 nm, respectively. This allows certain molecules, with the correct dimensions and chemistry, to form CD *inclusion complexes*. The structure of zearalenone appears to meet these criteria for γ-CD. Presumably, the

more hydrophobic region of zearalenone (end without the hydroxyl groups) becomes inserted in the cyclodextrin cavity, allowing the hydroxyl groups to interact with the hydrophilic groups on the surface of the CD, thereby forming a very stable complex. Since the cyclodextrin is carried along at the same rate as electroosmotic flow (44), zearalenone experiences a decrease in t_r. Some of the other toxins that have similar shapes to zearalenone could become inserted into the cavity of γ-CD, but without the additional interaction with the hydrophilic surface a much weaker association is expected. The preference of zearalenone for the largest CD is not clearly understood, since it could fit its long axis into a smaller CD. Perhaps the spatial arrangement of hydrophilic groups on the surface of γ-CD is well-suited to interact with that mycotoxin. The t_m marker (B(a)P) was also strongly effected by the γ-CD. For this reason, Figure 10 is a plot involving retention time, not k'. Sudan III was used to mark t_m in succeeding studies (see below).

Selecting Separation Conditions

Inspection of the data provided in Figure 7, 8, 9, and 10 enabled the selection of two mobile phases, each exhibiting unique selectivity towards the mycotoxins. The first condition was deduced by inspection of Figures 7, 9, and 10. Figure 7 shows the largest overall difference in k' values between 5 and 10 % organic modifier. However, under these conditions mycotoxin "e" often co-eluted or switched elution order with "d" and "f". The incorporation of γ-CD into the mobile phase, eliminated this problem (refer to Figure 10), but 2.5 % acetonitrile was required to prevent "e" and "c" from co-

eluting. Higher concentrations of acetonitrile, with the γ-CD present, resulted in the co-elution of "j" and "i" with the t_m marker, B(a)P. Based on the information in Figure 9 concerning the effect of pH, a pH of 9.3 was chosen. By combining these individual assignments of the effects of mobile phase additives, an optimal SDS-mobile phase system was chosen. This same approach was used to determine an optimal NaDC-mobile phase. Inspection of Figure 8 reveals that the largest k' difference occurs at approximately 7.0 % acetonitrile. The exact composition of the two optimized mobile phases can be found in the Experimental Section.

Two fully-resolved chromatograms representing the separation of the 10 mycotoxins using these mobile phases, are presented in Figure 11. The total time required to obtain both chromatograms, including system rinsing and equilibration, is about 45 minutes. The mycotoxins exhibited a significant change in retention characteristics between the two systems. In particular, a nearly complete reversal in elution order between the neutral and acidic mycotoxins is observed. Also notice that the t_m marker, B(a)P, used in the SDS/acetonitrile and SDS/pH studies, eluted prior to mycotoxins "i" and "j" when employing the optimized SDS-mobile phase system, thus Sudan III was included as a t_m marker. The early elution of the original t_m marker emphasizes the approximate nature of k' and suggest caution concerning conclusions drawn from trends in k'.

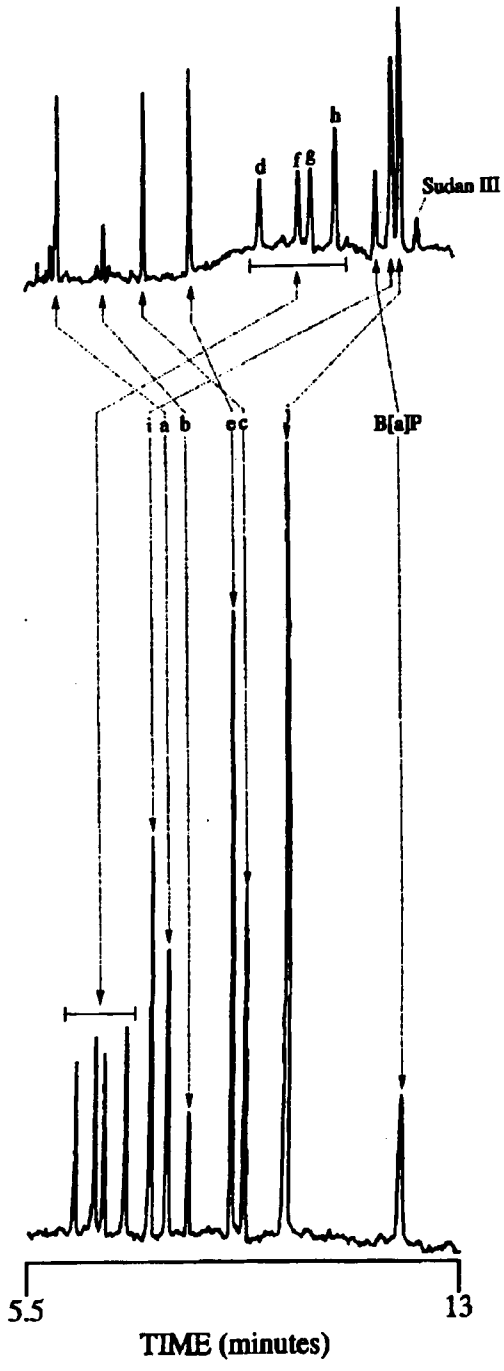

Figure 11: Electropherograms of the 10 mycotoxins depicted in Figure 6. Conditions presented in Experimental Section. **Top:** SDS-mobile phase **Bottom:** NaDC-mobile phase

Reproducibility

Table I provides reproducibility data for the two mobile phase systems, as determined by replicate consecutive or alternate injections of 5 selected mycotoxins. Reproducibility data were treated using two methods in this study. The first method consisted of measuring the solute's t_r from injection point to peak maximum (reproducibility reported as CV). The second method involved normalizing each t_r to the t_r of an adjacent-eluting mycotoxin (reproducibility reported as CV*). Refer to the Experimental Section for a complete description of these methods.

An interesting trend in CV values is observed in Table I. As retention time (hence k') increases there is a general increase in CVs. This holds true even as elution order is altered by a change in the mobile phase (e.g., observe the reproducibility data for mycotoxins "a" and "h"). This diminished reproducibility as the MECC retention mechanism becomes increasingly important is not surprising (see below). In CZE, retention precision is largely a matter of reproducibility in solute and electroosmotic mobilities. Experimental parameters can influence these mobilities. Most notably, Joule heating within the capillary system during a separation can result in spatial and temporal variations in temperature. Since mobilities are inversely related to viscosity, which exhibits a strong temperature dependence, solute band velocities are subject to a significant temperature dependence (30).

Table I. Statistical results, SDS and NaDC mobile phases Systems

mobile phase system		mycotoxin				
		a	e	h	i	j
SDS[1]	t_r*(min)	5.88	8.00	10.50	11.35	11.46
	CV	3.02	4.63	4.60	4.62	4.70
	CV*	1.70	1.49	0.212	0.148	0.177
NaDC[1]	t_r*(min)	8.31	9.42	7.52	8.00	10.38
	CV	1.56	1.62	1.20	1.34	2.02
	CV*	0.460	0.539	0.274	0.280	1.56
SDS[2]	tr*(min)	6.30	8.56	11.76	12.98	13.16
	CV	0.826	1.75	1.67	1.72	2.20
	CV*	1.07	0.964	0.244	0.222	0.242
NaDC[2]	tr*(min)	8.43	9.66	7.58	8.07	10.84
	CV	3.10	1.42	2.55	2.84	1.31
	CV*	0.876	0.395	0.303	0.446	0.345

1: consecutive separations, see Experimental Section for Procedure

2: alternate separations, see Experimental Section for procedure

*: normalized values, see Experimental Section for procedure

Lee and Yeung (56) have demonstrated the effective use of migration indices to improve retention reproducibility in CZE. In their work, normalizing t_r by dividing by the t_r of a normalization standard provided an improvement of 3.5 in reproducibility, while using a migration index related to the capillary current, integrated over the elution time of a solute, provided an impressive 14-fold improvement (see Table I in reference 56). The former approach was utilized, with varying degrees of success, to obtain the CV* data presented in Table I. The choice of a standard for retention normalization is expected to be much more critical, and the integrated current approach of Lee and Yeung less effective, when applied to MECC. This is because micelle mobility, critical micelle concentration (hence MECC phase ratio), and solute partition coefficients are all temperature dependent and will contribute to irreproducibility; i.e., retention in MECC is more complicated and often involves both electrophoretic and chromatographic considerations (30). Moreover, electroosmotic mobility and the electrophoretic mobility of the micelle are generally opposed, exasperating problems with retention reproducibility for late eluting compounds (30).

The overall t_r reproducibility presented for this MECC work is not as good as previously reported for CZE (56), but adequate for routine qualitative analysis (see below). The normalization procedure improved reproducibility to varying degrees depending on the appropriateness of the component used as the normalization standard. The procedure involves the assumption that the solute in

question will be subjected to, and exhibit the same, separation characteristics as the normalization standard. The fallacy of this assumption is apparent in the higher CV*s reported for mycotoxin "a" (citrinin) when using the SDS-mobile phase system. Citrinin was normalized using a mycotoxin (zearalenone) that behaved substantially different when mobile phase conditions were altered (see Figure 9 and 10). This could explain citrinin's higher CV* relative to other toxins. Conversely, each of the later eluting toxins, h, i, and j, were influenced by separating conditions in a manner that was similar to their normalization standard and exhibited lower CV* values. In general, toxins that eluted close (small resolutions) to their normalization standards exhibited relatively low CV* values. Also, the NaDC-mobile phase system had lower CV* and CV values, relative to the SDS system. This may be related to the more ordered structure of the NaDC micelle, as discussed above. The greater percentage of acetonitrile in the NaDC-mobile phase system could decrease the detrimental effects of evaporation, also contributing to the lower CV values.

Qualitative Analysis of Mycotoxin Mixtures

The results of qualitative determinations of the mycotoxins in five unknown mycotoxin/interferent mixtures (see Experimental Section for description) appear in Table II. The qualitative capabilities of MECC are clearly evident in the data presented; as well as the advantages of normalizing retention data and utilizing more than one unique set of separation conditions. Unknown

Table II. Results [a] of Qualitative Analysis Evaluation

mobile phase system	method used to ident.[b]	percent tolerance allowed [c]	# toxins ident.	# toxins not ident.	# toxins mis-ident.
SDS	measured t_r	± 4	16	5	7
NaDC	measured t_r	± 2	12	9	1
SDS & NaDC	measured tr	± 4 & 2	10	11	1
SDS	normalized t_r/t_m	± 4	18	3	6
		2	18	3	6
		1	14	7	2
SDS	spiking method	± 4	21	0	9
		2	20	1	7
		1	17	4	1
SDS	calculated k'	± 4 [d]	14	7	2
SDS & NaDC	spiking method	± 4 & 2	21	0	0

a: measurements based on 21 toxins distributed in 5 samples

b: refer to Experimental Section for procedure

c: tolerance based on the results tabulated in Table I, see text for discussion

d: tolerance based on data used to construct Table I

components were identified based on elution within allotted tolerance windows. Window positions were established via the injection of standard mycotoxin mixtures, while tolerances are based on rough averages of CV or CV* values presented in Table I. When retention normalization was performed, one of three procedures were employed: [1] calculating k', [2] utilizing the t_m marker (Sudan III added to each unknown) as the normalization standard, and [3] utilizing t_m and a spiked mycotoxin, that eluted roughly at the midpoint of the MECC total elution window, as normalization standards (see Experimental Section for details). Obviously, the spiking procedure diminishes the inherent speed of the MECC technique. Spiking with more or all of the possible mycotoxins would render the mycotoxin identification more reliable. However, since the unknown mixtures were already fairly complex, such spiking would need to be performed in steps (a few mycotoxins at a time) to avoid confusion. This would add greatly to analysis time.

When identification was based on t_r values (without normalization) and a single mobile phase system, the number of "not identified" and "mis-identified" toxins was relatively high. The greater precision for the NaDC-mobile phase, relative to the SDS-mobile phase, permitted a smaller tolerance. Thus, fewer "mis-identification" toxins occurred with the former. Utilizing both mobile phase systems also minimized mis-identifications. The normalization procedures significantly improved identification. Data in the table illustrates that as the tolerance is reduced the number

reduced. The choice of percent tolerance is somewhat arbitrary. From Table I, CV values for the SDS- and NaDC-mobile phases averaged about 4% and 2%, respectively. Complete normalization (i.e., using all the mycotoxins as normalization standards) resulted in an average CV* of less than 1%. The use of k' values as a qualitative parameter was surprisingly unsuccessful. However, the successful use of normalization, applied to both mobile phase systems, is illustrated in the table. All 21 of the mycotoxins were identified without a single mis-identification. It should be mentioned that for more complicated samples, it should be possible to establish more than two sets of unique separation conditions (mobile phases), and rapidly change between these conditions to facilitate identification.

The results of these studies illustrate the substantial qualitative capabilities of MECC. Although the specific, albeit important, case of mycotoxin analysis was addressed, the approaches and practical considerations presented herein for the development of qualitative methodologies should be applicable to other samples.

CHAPTER 4

CONCLUSION

The work reported herein indicated that MECC could be used to perform qualitative analyses in a fast and reliable manner. This was successfully accomplished and it was shown that reproducibility can be improved without complicating the MECC apparatus, as was required in previous methods discussed (see Chapter 1). The comparison of normalized retention data obtained using two completely different sets of conditions, made solute identification more reliable and reduced matrix interference.

The normalization procedures used in this study (see Experimental Section in Chapter 3) were required to compensate for changes in experimental parameters that often cause poor retention reproducibility. In particular, electroosmotic flow can be affected by many factors: fluctuation in applied voltage, disruption of the diffuse double layer by solute adsorption, Joule heating, etc.. The conventional approach to compensate for the variation in these factors is to spike the sample with a normalization internal standard. However, the many desirable characteristics of an ideal internal standard make them difficult to obtain, particularly when the samples are as complex as the one reported herein. The alternative would be to spike the sample with more than one internal standard, but this could further complicate the chromatogram.

The qualitative capabilities of MECC were studied via the analysis of mycotoxin mixtures. Some important information and improvement in the analytical procedure concerning the analyses of these compounds were obtained. The detection of the mycotoxins was done at a common wavelength (254 nm). Most literature procedures have used different wavelengths for the detection of these solutes. These procedures also used different solvent systems to separate complex mixtures of mycotoxins (e.g., see reference 68,70). These mycotoxins were rapidly separated in this study using one solvent system. Qualitative analyses of mycotoxins in foodstuff are usually done with TLC, which requires the use of different solvent systems to separate individual mycotoxins and a time consuming detection procedure (see reference 68). The separation and detection methods reported herein are simpler, quicker, and less expensive when applied to complex mycotoxin mixtures.

REFERENCES

REFERENCES

(1) Ramsey, W. *Proc. Roy Soc.* **1905**, A76, 111.

(2) Tswett, M. *Ber deut. botan. Ges.* **1906**, 24, 316, 384.

(3) Resuss, F. F. *Memoires de la Societe Impereiale des Naturalistes de Moscou* **1809**, 2, 324.

(4) Tiselius, A. *Trans. Faraday Soc.* **1937**, 33, 524.

(5) Wallingford, R. A.; Ewing, A.G. *Capillary Electrophoresis* in Advances in Chromatographia, Giddings, J. C.; Gruska, E.; Brown, P., Eds., Marcel Dekker Inc.: New york and Basel, Vol 29, Chapter 1.

(6) Jorgenson, J. W.; Lukacs, K. D. *Anal. Chem.* **1981**, 53, 1298.

(7) Overbeek, J.; Bijsterboch, B. *The Electrical Double Layer and the Theory of Electrophoresis in Electrokinetic Separation Methods*, Righetti, P.; Oss, C. V.; Vanderhoff, J. Eds.; Elsvier/North-Holland Biomedical Press: Amsterdam, Vol. p1.

(8) Pretorius, V.; Hopkins, B.; Schieke, J. *J. Chromatogr.* **1974**, 99, 23.

(9) Jorgenson, J. W.; Lukacs, K. D. *Science* **1983**, 222, 266.

(10) Green, J. S.; Jorgenson, J. W. *J. Chromtogr.* **1989**, 12, 2527.

(11) Sepaniak, M. J.; Swaile, D. F.; Powell, A. C. *J. Chromatogr.* **1989**, 480, 185.

(12) Terabe, S.; Otsuka, K.; Ichikawa, K.; Tsuchiya, A.; Ando, T. *Anal. Chem.* **1984**, 56, 111.

(13) Burton, D. E.; Sepaniak, M. J.; Maskarinec, M. P. *J. Chromatog. Sci.* **1987**, 25, 514.

(14) Green, J. S.; Jorgenson, J. W. *J. Chromatogr.* **1986**, 352, 337.

(15) Yeung, E. S.; Kuhr, W. G. *Anal. Chem.* **1988**, 60, 2642.

(16) Nickerson, B.; Jorgenson, J. W. *J. Chromatogr.* **1989**, 480, 157.

(17) Wu, S.; Dovichi, N. *J. Chromatogr.* **1989**, 480, 157.

(18) Yeung, E. S.; Christensen, P. L. *Anal. Chem.* **1989**, 61, 1344.

(19) Gozel, P.; Gassmann, E.; Michelson, H.: Zare, R. N. *Anal. Chem.* **1987**, 59, 44.

(20) Gassman, E.; Kuo, J. E.; Zare, R. N. *Science* **1985**, 230, 813.

(21) Kuhr, W. G.; Yeung, E. S. *Anal. Chem.* **1988**, 60, 1832.

(22) Swaile, D. F.; Sepaniak, M. J. *J. Chromatogr.* **1991**, 14, 869.

(23) Caprioli, R.; Moore, W.; Martin, M.; DaGue, B., Wilson, K.; Moring, S. *J. Chromatogr.* **1989**, 480, 247.

(24) Wallingford, R. A.; Ewing, A. G. *Anal. Chem.* **1988**, 60, 258.

(25) Huang, X.; Luckey, J.; Gordon, M.; Zare, R. *Anal. Chem.* **1989**, 61, 766.

(26) Lauer, H. H.; McManigill, *Anal. Chem.* **1986**, 58, 166.

(27) McCormick, R. M. *Anal. Chem.* **1988**, 60, 2322.

(28) Burton, D. E.; Sepaniak, M. J.; Maskarinec, M. P. *J. Chromatogr. Sci.* **1987**, 24, 347.

(29) Mittal, K. L. (Ed.) *Mizellization, Solubilization and Microemulsions* Plenum, NY **1977**, Vol. 1.

(30) Sepaniak, M. J.; Powell, A. C.; Swaile, D. F.; Cole, R. O. *Handbook of Capillary Electrophoresis*, Colburn, J. C.; Grossman, Eds., Acedemic Press: New York, **1992**; Chapter 6.

(31) Cole, R. O.; Sepaniak, M. J.; Hinze, W. L.; Oldiges, K.; Gorse, J. *J. Chromatogr.* **1991**, 557, 113.

(32) Campanelli, A. R.; De Sanctis, C.; Chiessi, E.; D' Alagni, M.; Giglo, E.; Scaramuzza, L. *J. Phys. Chem.* **1989**, 93. 1536.

(33) Cole, R. O.; Sepaniak, M. J.; Hinze, W. L. *J. High Res. Chrom.* **1990**, 13, 579.

(34) Teraba, S.; Otsuka, K.; Ando, T. *Anal. Chem.* **1985**, 57, 834.

(35) Mikkers, F. P.; Everaerts, F. M.; Verheggen, T. P. E. M. *J. Chromatogr.* **1979**, 169, 1.

(36) Whang, C.-W.; Yeung, E. S. *Anal. Chem.* **1992**, 64, 502.

(37) Gorse, J.; Balchunas, A. T.; Swaile, D. F.; Sepaniak, M. J. *J. High Res. Chromtagr. Chrom. Commun.* **1988**, 11, 554.

(38) Fujiwara, S.; Honda, S. *Anal. Chem.* **1987**, 59, 487.

(39) Balchunas, A. T.; Sepaniak, M. J. *Anal. Chem.* **1988**, 60, 617.

(40) Sepaniak, M. J.; Cole, R. O. *Anal. Chem.* **1987**, 59, 472.

(41) Balchunas, A. T.; Swaile, D. F.; Powell, A. C.; Sepaniak, M. J. *Sep. Sci. Technol.* **1988**, 23, 1891.

(42) Sepaniak, M. J.; Swaile, D. F.; Powell, A. C. *J. Chromatogr.* **1989**, 480, 185.

(43) Powell, A. C.; Sepaniak, M. J. *J. Microcol. Sep.* **1990**, 2, 278.

(44) Cole, R. O.; Clark, B. C.; Sepaniak, M. J. *J. Chromatogr.* **1992**, 15, 1023.

(45) Fanali, S. *J. Chromatogr.* **1991**, 545, 437.

(46) Swartz, M. *J. liq. Chrom.* **1991**, 14, 923.

(47) Guttman, A.; Paulus, A.; Cohen, A. S.; Grinberg, N.; Karger, B. L. *J. Chromatogr.* **1988**, 448, 41.

(48) Strattan, C. E. *Biopharm* **1991**, 4, 44.

(49) Knox, J. H.; Gilbert, M. T. *J. Chromatogr.* **1979**, 186, 405.

(50) Jorgenson, J. W.; Guthrie, E. J. *J. Chromatogr.* **1983**, 255, 335.

(51) Sepaniak, M. J.; Burton, D. E.; Maskarinec, M. P. In *Micellar Electorkinetic Capillary Chromatography* Comstock, M. J. Ed. American Chemical Society, Washington, D. C. **1987**, 342, 142.

(52) Cole, R. O.; Holland, R. D.; Sepaniak, M., J. *Talanta.*, in press.

(53) Smith, J. E.; Moss, M. O. *Mycotoxin Formation Analysis and Significance*, John Wiley and Sons: New York, **1985**, Chapter 7.

(54) Pelletier, M. J.; Spetz, W. L.; Aultz, T. R. *Rev. Sci. Instrum.* 1991, 62, 1926.

(55) Guttman, A.; Gohen, A. S.; Heiger, D. N.; Karger, B. L. *Anal. Chem.* **1990**, 62, 137.

(56) Lee, T.; Yeung, E. S. Anal. Chem. 1991, 63, 2842.

(57) Dose, E. V.; Guiochon, G. *Anal. Chem.* **1992**, 64, 123.

(58) Gorst-Allman, C. P.; Steyn, P. S. *J. Chromatogr.* **1979**, 175, 325.

(59) Smith, R. D.; Olivares, J. A.; Nguyen, N. T.; Udseth, H. R. *Anal. Chem.* **1988**, 60, 436.

(60) Smith, S. C.; Strasters, J. K.; Khaledi, M. G. *J. Chromatogr.* **1991**, 559, 57.

(61) Rose, D. J.; Jorgenson, J. W.; *Anal. Chem.* **1988**, 60, 642.

(62) Burton, D. E.; Sepaniak, M. J.; Maskarinec, M. P. *Chromatographia* **1986**, 21, 583.

(63) Terabe, s.; Otsuka, K.; Ando, T. *Anal. Chem.* **1989**, 61, 251.

(64) Walbroehl Y.; Jorgenson, J. W. *J. Chromatogr.* **1984**, 315, 135.

(65) Lauer H.; McManigill, D. Trends *Anal. Chem.* **1986**, 5, 11.

(66) Burton, D. E.; Sepaniak, M. J. *J. Chromatogr. Sci.* **1986**, 24, 347.

(67) Marassas, W. F. O.; Nelson, P. O. *Mycotoxicology*, The Penn. State

Univ., Univ. Park and London, **1987**, Introduction.

(68) Helrich, K. *Offical Methods of Analysis*, 15th ed.; AOAC: VA, **1990**; Chapter 49.

(69) Guttman, A.; Cooke, N. *Anal. Chem.* **1991**, 63, 2038.

(70) Gorst-Allman, C. P.; Steyn, P. S. *J. Chromatogr.* **1979**, 175, 325.

(71) Beaver, R. W. *J. High Res. Chrom.* **1990**, 13, 833.

(72) Williams, R. W. Jr.; ZhengSheng, Fu; Hinze, W. L. *J. Chromatogr. Sci.* **1990**, 28, 292

VITA

Ricky Dean Holland was born in Wichita, Kansas on January 10, 1956. He graduated from Sulphur Rock High School (Sulphur Rock, Arkansas) in May 1973. In September 1986 he entered Arkansas College at Batesville, Arkansas and in May 1990 received the degree of Bachelor of Science in Chemistry and a minor in Biology. He entered The University of Tennessee, Knoxville in August 1990 and in August 1992 received a Master of Science degree in Chemistry.

He has accepted a Chemist I position at Oak Ridge National Laboratory in Oak Ridge, Tennessee and started work there in September 1992.