To the Graduate Council:

I am submitting herewith a thesis written by Robert S. McKamey entitled "A Method of Adjusting Turbine Engine Transient Test Data for the Effects of Variations in Environmental Conditions." I have examined the final copy of this thesis for form and content and recommend that it be accepted in partial fulfillment of the requirements for the degree of Master of Science, with a major in Mechanical Engineering.

Roger Crawford

Roger Crawford, Major Professor

We have read this thesis
and recommend its acceptance:

Roy J. Schulz

Frank E. Collins

Accepted for the Council:

Lew Minkel

Vice Provost
and Dean of The Graduate School

STATEMENT OF PERMISSION TO USE

In presenting this thesis in partial fulfillment of the requirements for a Master's degree at The University of Tennessee, Knoxville, I agree that the Library shall make it available to borrowers under rules of the Library. Brief quotations from this thesis are allowable without special permission, provided that accurate acknowledgment of the source is made.

Permission for extensive quotation from or reproduction of this thesis may be granted by my major professor, or in his absence, by the Head of Interlibrary Services when, in the opinion of either, the proposed use of the material is for scholarly purposes. Any copying or use of the material in this thesis for financial gain shall not be allowed without my written permission.

Signature Robert S. McKamey

Date April 16, 1991

A METHOD OF ADJUSTING TURBINE ENGINE TRANSIENT TEST DATA FOR THE EFFECTS OF VARIATIONS IN ENVIRONMENTAL CONDITIONS

A Thesis

Presented for the

Master of Science

Degree

The University of Tennessee, Knoxville

Robert S. McKamey

May 1991

DEDICATION

I would like to dedicate this research to my father, Robert Lonnie McKamey. If a parent is responsible for stressing the importance of education, he was successful. My greatest desire is that I achieve the same results with my son, William.

ACKNOWLEDGEMENTS

I owe a great debt of gratitude to several people for assistance provided during the research of this thesis. Louis A. Urban deserves credit for the work that is the foundation of the current research. Mark A. Chappell and Claude Chamblee are credited with the concept of applying Urban's work to the adjustment of test data. Credit should also be given to Fran C. Loper and Matthew B. Prufert for other technical assistance.

I would also like to thank Professors Roger Crawford, Roy Shulz and Frank Collins who served as my director and committee, respectively. Their criticisms were both constructive and encouraging. Whatever errors may remain in my work, however, are solely my responsibility.

ABSTRACT

In a turbine engine altitude test facility, it is desirable to maintain steady environmental test conditions during engine throttle transients. In practice, limited variations from the desired steady test conditions are acceptable. These small variations can affect the analysis of the transient performance of the test engine. An alternative is to adjust transient test data to account for variations from the desired environmental conditions.

Using a set of equations that describe the incremental relationships among turbine engine performance parameters, an analytical method has been developed to adjust turbine engine throttle transient test data for variations in environmental test conditions from the desired values. The method was evaluated using validated turbine engine mathematical model data.

Results were compared with model predictions for the desired conditions and also with model data adjusted from simulated test cell conditions (as-tested) to desired conditions using a method commonly used on steady-state data. The results indicated that for throttle transients with no limiting control action, the analytical method made effective adjustments to the as-tested model data for pressure variations of less than ten percent and for temperature variations of less than one percent. The analytical method adjustments for total pressure variations were comparable to other adjustment methods, but

the static pressure and inlet temperature adjustments using the analytical method were superior within the constraints mentioned above.

TABLE OF CONTENTS

CHAPTER		PAGE
I.	INTRODUCTION	1
II.	PARAMETER INTERRELATIONSHIPS	9
III.	TRANSIENT DATA ADJUSTMENT	20
IV.	RESULTS OF ANALYTICAL METHOD ADJUSTMENTS	23
V.	SUMMARY AND RECOMMENDATIONS	36
	BIBLIOGRAPHY	37
	VITA	39

LIST OF FIGURES

FIGURE		PAGE
1.	Typical Altitude Test Facility Configuration	2
2.	Typical Turbine Engine Transient Throttle Profiles . . .	3
3.	Environmental Variations versus Throttle Setting During Typical Transient Point	6
4.	Typical Engine Station Designations	7
5.	Typical Turbine Engine Operating Envelope	24
6.	Effects of Environmental Variations on Net Thrust and Time to Thrust	26
7.	Effects of Environmental Variations on Fan Operating Line	28
8.	Analytical Method Adjustment to Net Thrust at Point 1	29
9.	Analytical Method Adjustment to Airflow at Point 1 . . .	30
10.	Analytical Method Adjustment to Burner Pressure at Point 1	31
11.	Analytical Method Adjustment to Fuel Flow at Point 1	32
12.	Decreased Effectiveness of Net Thrust Adjustment for T_{t2} Variations Greater Than One Percent	34
13.	Decreased Effectiveness of Net Thrust Adjustment During Engine Control Intervention to Limit P_{S3}	35

NOMENCLATURE

A	Area
C_p	Constant pressure specific heat of air
g_c	Acceleration of gravity
IRP	Intermediate rated power
J	Energy conversion constant
ℓn	Natural logrithm
M	Mach number
N	Rotor speed
P	Pressure
q	Heat of formation
T	Temperature
V	Velocity
W	Mass flow rate
γ	Ratio of specific heats of air
δ	Pressure ratio
η	Component efficiency
θ	Temperature ratio

Subscripts

b	Burner
c	Compressor
f	Fuel
s	Static condition
t	Total condition
1-9	Engine stations (refer to Figure 3)

CHAPTER I

INTRODUCTION

The need to adjust turbine engine test data acquired from an altitude test facility (ATF) is due to the operation of the facility at non-standard conditions. The role of an aeropropulsion ATF is to simulate the operational environment that a propulsion system will encounter in service. Figure 1 shows a typical aeropropulsion ATF.

The ATF must be able to maintain steady temperature and pressure in the test cell while meeting the engine airflow demand. The ability to accomplish this is especially important during flight clearance and engine specification compliance testing. Environmental variations in an ATF are largely due to the finite volume dynamics of the apparatus. Different facilities will posses differing volume dynamic characteristics. Comparison of data from one ATF to another requires a method to compensate or "adjust" the data to a standard set of environmental conditions.

Transient testing involves executing a prescribed throttle movement and measuring the engine performance response. Snaps, chops and bodie transients are the most common types of throttle transients that are prescribed. All three of these throttle movements are rapid and place a heavy burden on an ATF control system that is trying to maintain specified environmental conditions. All of these types of throttle movements are illustrated in Figure 2.

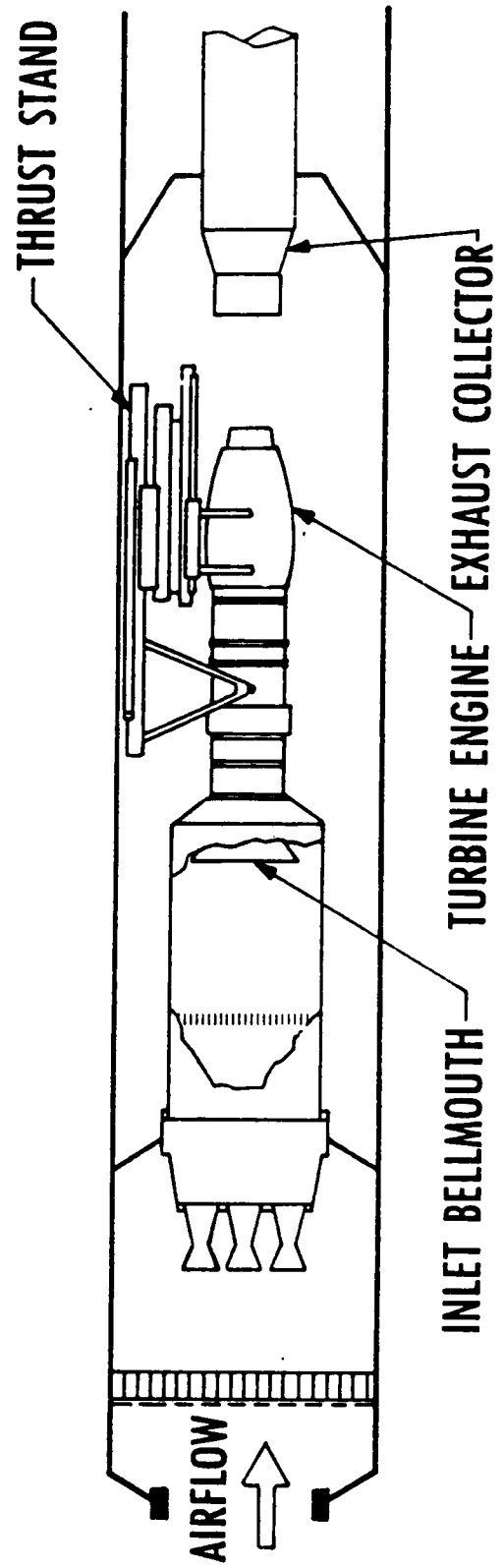

Figure 1. Typical Altitude Test Facility Configuration

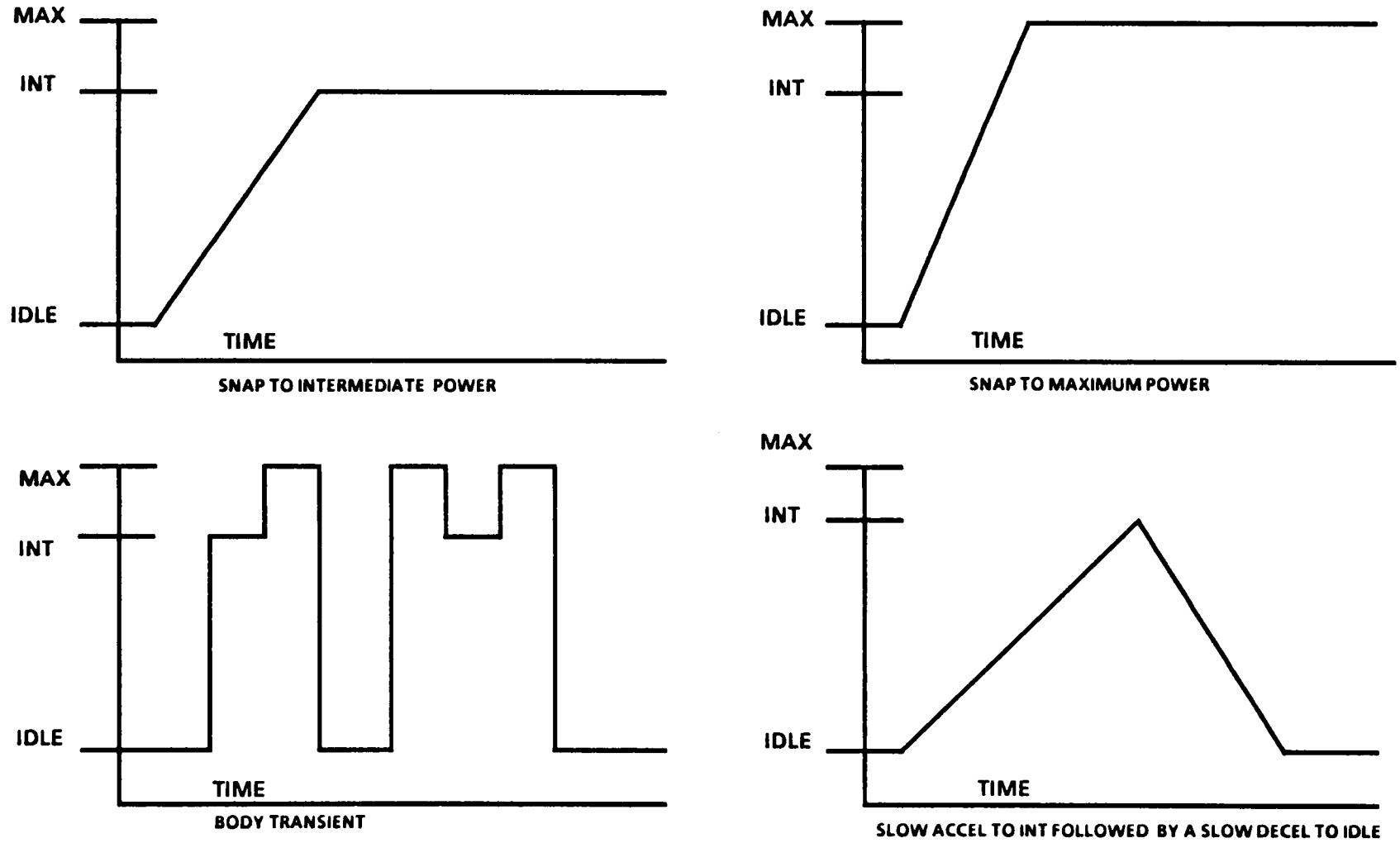

Figure 2. Typical Turbine Engine Transient Throttle Profiles

An ATF is a complex system of compressors, valves turbines, heaters, and coolers. These components work together to simulate operational environments. The environmental parameters important to the turbine engine include inlet total pressure, P_{t2}, inlet total temperature, T_{t2}, free-stream ambient pressure, P_{amb}, and specific humidity, Φ. Humidity is generally not specified but controlled to as low a level as is practical. In the ASTF test facility at the Arnold Engineering Development Center (AEDC) near Tullahoma, Tennessee, a specific humidity capability of 0.5 grains per pound of air is quoted [1][1].

Maintaining specified environmental conditions is much more demanding during engine transient operation than during steady-state testing. The ability to control transient environmental conditions in an ATF is a function of environmental temperature and pressure levels, engine airflow excursion rates, test facility hardware configuration, and facility control response characteristics. During throttle transients, the turbine engine acts as a valve to the airflow through an ATF. For data acquisition during these transients, the task of maintaining steady conditions is complicated by the effects of transient engine airflow requirements. The engine will "pump down" the inlet duct during throttle snaps and, like a valve, will act as a restriction during throttle chops. A throttle snap is like a sudden opening of the valve. The ATF control, which is programmed to maintain the specified

[1]Numbers in brackets refer to similarly numbered references in the Bibliography.

environmental conditions at the engine inlet, has to respond to the change in the demand for airflow as the engine accelerates. During the period that the ATF control is responding, the environmental conditions will drift away from the specified values. The magnitude of this drift or variation as it will be referred to differs from one test cell to another. In the ASTF test cells at AEDC, the maximum transient pressure variation is quoted as 5% and the maximum transient temperature variation is quoted at 2.5% [1]. Figure 3 represents a typical time profile of the environmental conditions during a throttle snap. The effect of environmental variations like those shown in Figure 4 is to change the measured performance of the test engine. An effective method is therefore required to adjust measured performance values from the actual as-tested environmental conditions to the specified conditions.

The turbine engine type of interest to this research is the two-spool, low-bypass turbofan. Figure 4 shows the engine station designations used by Urban for a two-spool turbofan engine [2].

Deviations in propulsion system performance due to variations in environmental conditions during steady-state testing have been corrected using referred parameters (derived from a dimensional analysis of the propulsion system functional relationships), or by using propulsion system environmental sensitivity factors (derived from a detailed mathematical simulation of the propulsion system).

There are currently no standard U. S. Government or industry methodologies for adjusting engine transient performance data for

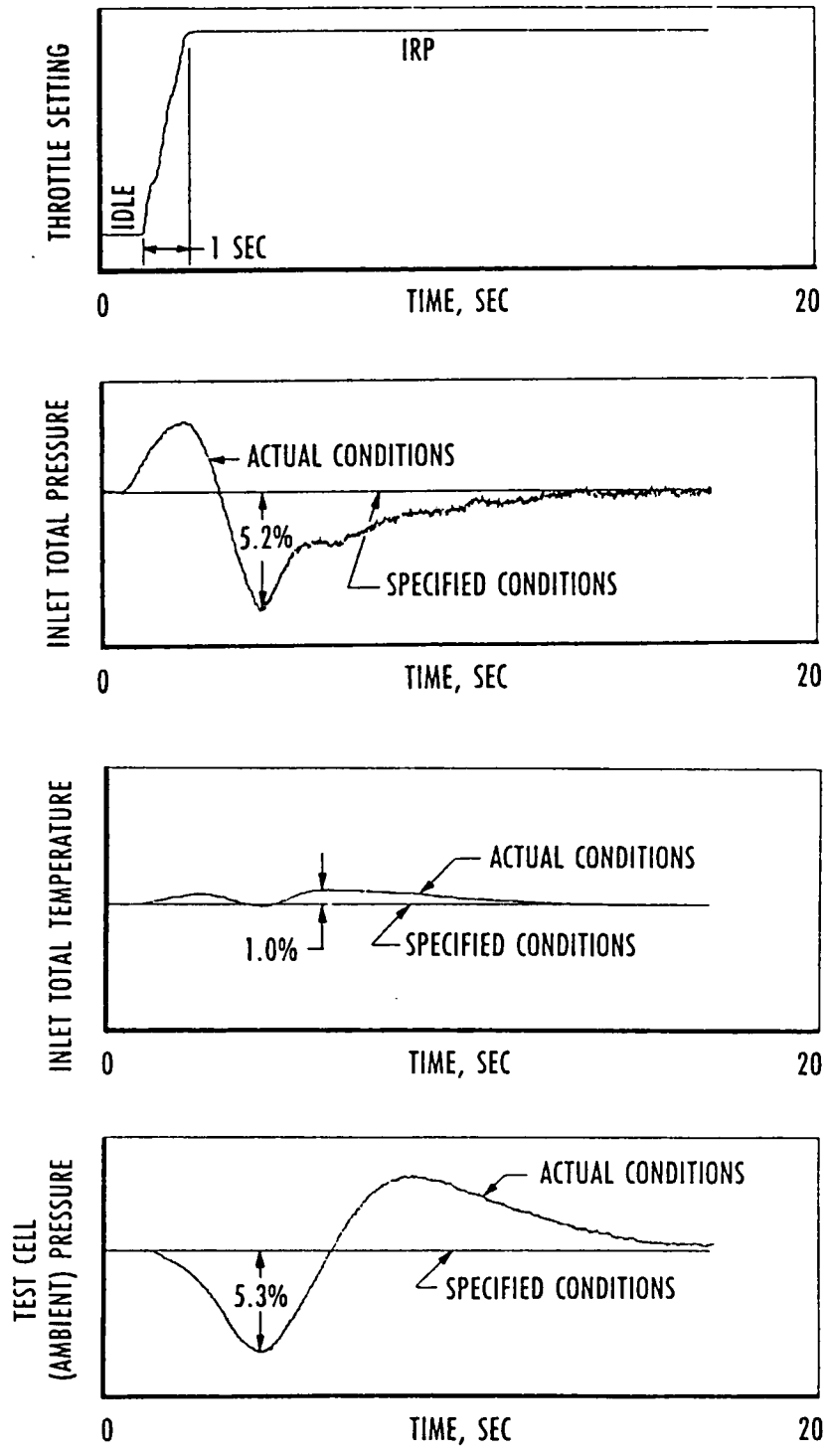

Figure 3. Environmental Variations versus Throttle Setting During Typical Transient Point

STATION NUMBER	STATION IDENTIFICATION
0	FREESTREAM
2	FAN INLET
3	COMPRESSOR EXIT
4	COMBUSTOR EXIT

STATION NUMBER	STATION IDENTIFICATION
5	TURBINE EXIT
7	EXHAUST NOZZLE INLET
8	EXHAUST NOZZLE THROAT
9	EXHAUST NOZZLE EXIT

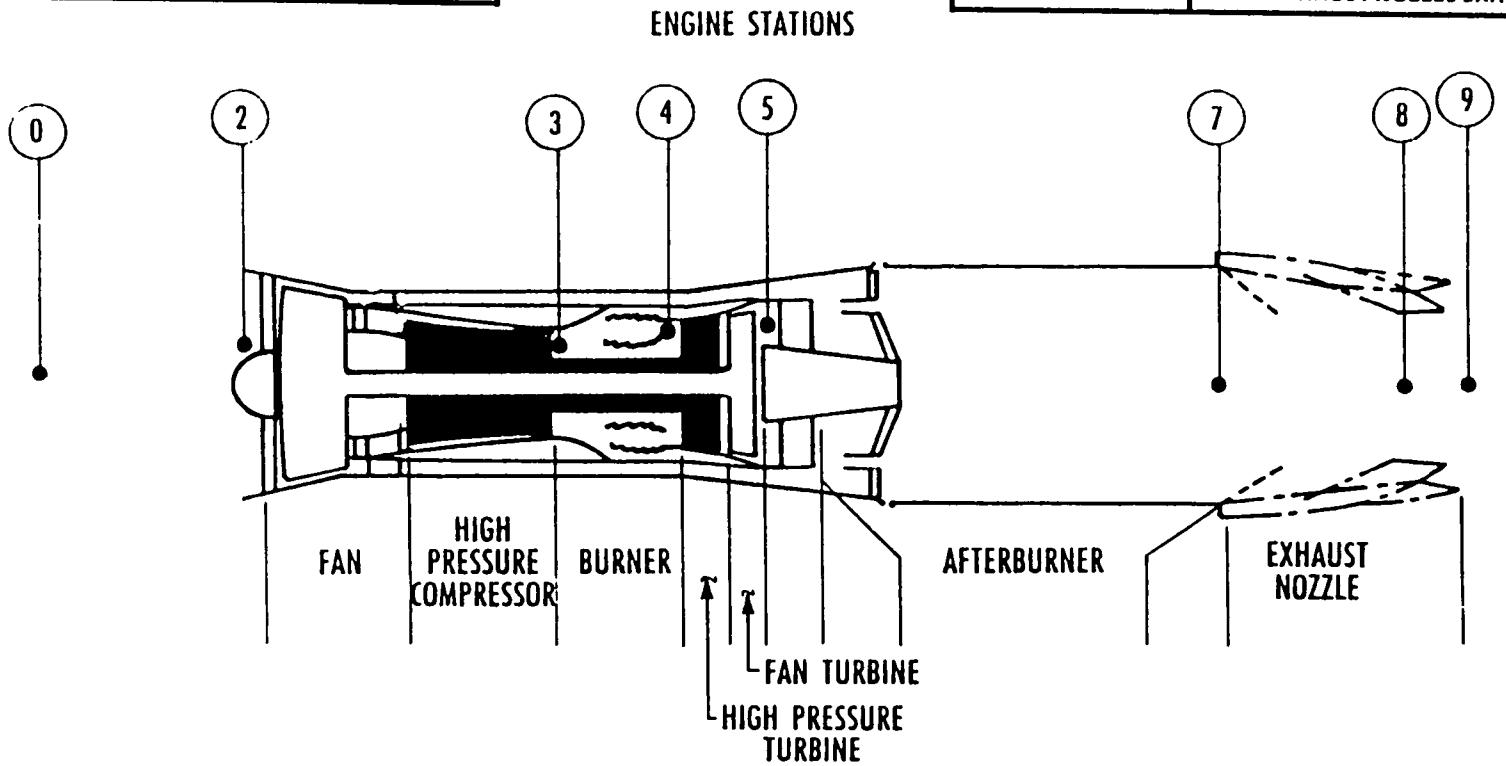

Figure 4. Typical Engine Station Designations

variations in the environmental test conditions although, referred parameter methods have been used previously. Equation (I-1) is the referred parameter adjustment for engine inlet airflow [3].

$$W_{2\,adj} = W_{2\,measured} * \left(\sqrt{\theta_2} / \delta_2 \right) \tag{I-1}$$

where:

$$\delta_2 = P_{t2\,specified} / P_{t2\,actual} \tag{I-2}$$

and

$$\theta_2 = T_{t2\,specified} / T_{t2\,actual}. \tag{I-3}$$

The second method uses a mathematical simulation to predict the ratio of parameter values from the actual to the desired conditions. The adjustment for engine inlet airflow using the ratio predicted by the mathematical simulation is therefore:

$$W_{2\,adj} = W_{2\,measured} * \left(W_{2\,model\,spec} / W_{2\,model\,actual} \right). \tag{I-4}$$

The variations in environmental conditions for throttle transients are much greater than for steady-state testing. Any adjustment method applied to transient data will thus have to be useful over a wider range of environmental variations than the methods applied to steady-state data.

CHAPTER II

PARAMETER INTERRELATIONSHIPS

Louis Urban [2] developed a set of relationships that he called "parameter interrelationships" to help engineers to predict how turbine engine performance parameters change with respect to each other, relative to the engine operating environment, and to the engine control. Relationships quantifying engine response to changes in the environment are directly applicable to the adjustment of turbine engine test data acquired in an ATF.

Before beginning a detailed presentation of the parameter interrelationships, several terms must be defined.

$$\mu = \left.\frac{\partial W2/W2}{\partial N/N}\right|_{T_{t4} = const}$$

$$\alpha = \frac{\frac{\gamma - 1}{\gamma}\left(\frac{P_{t3}}{P_{t2}}\right)^{\frac{\gamma-1}{\gamma}}}{\left(\frac{P_{t3}}{P_{t2}}\right)^{\frac{\gamma-1}{\gamma}} - 1}$$

$$\Phi_t = \frac{\frac{\gamma - 1}{\gamma}}{\left(\frac{P_{t4}}{P_{t3}}\right)^{\frac{\gamma-1}{\gamma}} - 1}$$

$$\Phi_n = \frac{\frac{\gamma-1}{\gamma}}{\left(\frac{P_{t5}}{P_{amb}}\right)^{\frac{\gamma-1}{\gamma}} - 1}$$

Of the preceding terms, μ is determined prior to testing from either previous test data or previous rig test data. When calculating μ, care should be exercixed to ensure that the units are consistent and that the calculated terms is normalized.

Equations (II-1) through (II-5) are the fundamental relationships for turbine engines from which Urban derived the relationships necessary to construct the parameter influence matrix of Table 1 [2].

$$\frac{W_2\sqrt{\theta}_2}{\delta_2} = f\left(\frac{N}{\sqrt{\theta_2}}\right) \qquad \text{(II-1)}$$

$$\frac{P_{S3}}{P_{t3}} = \left(1 + \frac{\gamma-1}{2} M_3^2\right)^{-\frac{\gamma-1}{\gamma}} \qquad \text{(II-2)}$$

$$W_f \eta_b q_f = W_2 C_p \left(T_{t4} - T_{t3}\right) \qquad \text{(II-3)}$$

$$FG = \frac{W_g}{g_c}\sqrt{2g_c J \eta_n C_p T_{t5}\left[1 - \left(\frac{P_{amb}}{P_{t5}}\right)^{\frac{\gamma-1}{\gamma}}\right]} \qquad \text{(II-4)}$$

Tables 1 and 2, except for the rows pertaining to burner static pressure (P_{S3}) and gross thrust (FG), are taken directly from Urban [2]. For both tables, the far left column represents the dependent engine variables and the top row represents the independent

Table 1. Influence of Environmental Parameters on Turbine Engine Performance Parameters

Environmental Parameters

Performance Parameters	$\partial T_{t2}/T_{t2}$	$\partial P_{t2}/P_{t2}$	$\partial P_{amb}/P_{amb}$
$\frac{\partial FG}{FG}$	$-\left(\frac{1+\mu}{2}\right)+\frac{1}{2}\left[\frac{\gamma-1}{\gamma}\left(\frac{1+\mu}{2}\,\frac{\alpha}{\Phi_t}-\frac{1}{\Phi t}\right)-\Phi_n\left(\frac{1+\mu}{2}\left(\frac{\Phi_t-\alpha}{\Phi_t}\right)+\frac{1}{\Phi t}\right)\right]$	$1+\frac{\Phi_n}{2}$	$-\frac{\Phi_n}{2}$
$\frac{\partial PS_3}{PS_3}$	$-\left(\frac{1+\mu}{2}\right)$	1	0
$\frac{\partial W_2}{W2}$	$-\left(\frac{1+\mu}{2}\right)$	1	0
$\frac{\partial W_f}{W_f}$	$-\left(\frac{1}{2}+\frac{\gamma+1}{2\gamma}\,\frac{T_3}{\Delta T_b}\right)-\frac{\mu}{2}\left(1-\frac{\gamma-1}{\gamma\eta_c}\,\frac{T_3}{\Delta T_b}\right)$	1	0

Table 2. Influence of Environmental Parameters on Other Turbine Engine Parameters

Engine Parameters	Environmental Parameters		
	$\partial T_{t2}/T_{t2}$	$\partial P_{t2}/P_{t2}$	$\partial P_{amb}/P_{amb}$
$\frac{\partial T_{t5}}{T_{t5}}$	$\frac{\gamma-1}{\gamma}\left(\frac{1+\mu}{2}\ \frac{\alpha}{\Phi_t} - \frac{1}{\Phi t}\right)$	1	1
$\frac{\partial T_{t4}}{T_{t4}}$	0	0	0
$\frac{\partial T_{t3}}{Tt3}$	$\frac{\gamma+1}{2\gamma} - \frac{\gamma-1}{\gamma\eta_c}\ \frac{\mu}{2}$	0	0
$\frac{\partial N}{N}$	0	0	0
$\frac{\partial P_{t3}}{P_{t3}}$	$-\ \frac{1+\mu}{2}$	1	1
$\frac{\partial T_{t2}}{Tt2}$	1	0	0
$\frac{\partial \eta_n}{\eta_n}$	0	0	0
$\frac{\partial W_9}{W_9}$	$-\left(\frac{1+\mu}{2}\right)$	1	0

environmental variables. A normalized influence derivative,

$$\frac{\partial X}{X} / \frac{\partial Y}{Y},$$

for any of the dependent variables with respect to any of the environmental variables, can be read from these tables and utilized in the adjustment method described in the following section.

Urban did not present detailed derivations, however, those derivations pertinent to the Analytical Adjustment Method will be reconstructed here.

Equation (II-1) expresses the relationship of corrected airflow to corrected speed. In a turbofan engine this corrected speed would be for the fan and in a turbojet it would represent the high pressure compressor corrected speed. Most likely through dimensional analysis, Urban defined the function relating corrected airflow to corrected speed as the following [2].

$$\frac{W_2\sqrt{\theta_2}}{\delta_2} = K\left(\frac{N}{\sqrt{\theta_2}}\right)^{\mu} \qquad \text{(II-5)}$$

where;

$$\theta_2 = \frac{T_{t2}}{518.67}$$

and;

$$\delta_2 = \frac{P_{t2}}{14.696}$$

and;

$$\mu = \frac{\partial W_2 / W_2}{\partial N / N}$$

In this form, Equation (II-5) is differentiable. To obtain the normalized parameters that are used by Urban, logarithmic differentiation is used. Taking the natural logarithm of both sides of Equation (II-5), and regrouping terms yields the following.

$$\ell n\, W_2 = \ell n\, P_{t2} - \ell n(14.696) + \mu\, \ell n\, N - \frac{\mu+1}{2}\left[\ell n T_{t2} - \ell n(518.67)\right] \qquad \text{(II-6)}$$

Differentiating (II-6) produces;

$$\frac{\partial W_2}{W_2} = \frac{\partial P_{t2}}{P_{t2}} + \mu\,\frac{\partial N}{N} - \frac{\mu+1}{2}\,\frac{\partial T_{t2}}{T_{t2}} \qquad \text{(II-7)}$$

Substituting into the right hand side of (II-7) from Table 1, page 11, produces Equations (II-8), (II-9), and (II-10).

$$\frac{\partial W_2/W_2}{\partial T_{t2}/T_{t2}} = -\frac{\mu+1}{2} \qquad \text{(II-8)}$$

$$\frac{\partial W_2/W_2}{\partial P_{t2}/P_{t2}} = 1 \qquad \text{(II-9)}$$

$$\frac{\partial W_2/W_2}{\partial P_{amb}/P_{amb}} = 1 \qquad \text{(II-10)}$$

Equations (2-8), (2-9) and (2-10) agree with Table 2, page 12.

Burner inlet static pressure, P_{S3}, is another performance parameter of importance to the turbine engine analyst. Equation (II-2) is the isentropic relationship of static to total pressure at the burner inlet. Redefining Equation (II-2) as;

$$P_{S3} = P_{t3}\left(1 + \frac{\gamma - 1}{2} M_3^2\right)^{-\left(\frac{\gamma}{\gamma - 1}\right)} \qquad \text{(II-11)}$$

substituting;

$$f(\gamma, M_3) = \left(1 + \frac{\gamma - 1}{2} M_3^2\right)$$

taking the logarithm of both sides;

$$\ell n\, P_{S3} = \ell n\, P_{t3} - \left(\frac{\gamma}{\gamma - 1}\right) \ell n\, f(\gamma, M_3) \qquad \text{(II-12)}$$

and differentiating;

$$\frac{\partial P_{S3}}{P_{S3}} = \frac{\partial P_{t3}}{P_{t3}} - \frac{\gamma}{\gamma - 1} \frac{\partial f(\gamma, M_3)}{f(\gamma, M_3)} \qquad \text{(II-13)}$$

the substituted function can now be differentiated;

$$\frac{\partial f(\gamma, M_3)}{f(\gamma, M_3)} = \left[\frac{\gamma - 1}{\frac{1}{M_3^2} + \frac{\gamma - 1}{2}}\right] \frac{\partial M_3}{M_3}$$

substituting back into Equation (II-13) produces;

$$\frac{\partial P_{S3}}{P_{S3}} = \frac{\partial P_{t3}}{P_{t3}} - \left(\frac{\gamma}{\gamma - 1}\right)\left[\frac{\gamma - 1}{\frac{1}{M_3^2} + \frac{\gamma - 1}{2}}\right] \frac{\partial M_3}{M_3} \qquad \text{(II-14)}$$

Here an assumption is made about M_3. M_3 is generally a design consideration. It is designed to vary very little over the operating envelope of the engine and therefore the following assumption is made;

$$\frac{\partial M_3}{M_3} \approx 0$$

Thus, Equation (II-14) reduces to;

$$\frac{\partial P_{S3}}{P_{S3}} \approx \frac{\partial P_{t3}}{P_{t3}} \qquad \text{(II-15)}$$

Airframe manufacturers both military and commercial are sensitive to fuel consumption. Therefore, fuel flow is a very important consideration in turbine engine testing. Equation (II-3) is a first law thermodynamic energy balance through the engine combustor. Regrouping Equation (II-3) produces;

$$W_f = \frac{W_2 C_p \left(T_{t4} - T_{t3} \right)}{\eta_b q_f} \qquad \text{(II-16)}$$

Again taking the natural logarithm of both sides;

$$\ell n\, W_f = \ell n\, W_2 + \ell n\, C_p + \ell n \left(T_{t4} - T_{t5} \right) - \ell n\, \eta_b - \ell n\, q_f \qquad \text{(II-17)}$$

At this point, assumptions are made that specific heat, C_p, burner efficiency, η_b, and the heat of formation of the fuel, q_f, are all constant over the range of consideration. These terms will drop out since the logarithm of a constant is a constant and differentiating a constant yields zero. Equation (II-17) becomes;

$$\frac{\partial W_f}{W_f} = \frac{\partial W_2}{W_2} + \frac{\partial \Delta T_b}{\Delta T_b} \qquad \text{(II-18)}$$

where;

$$\Delta T_b = \left(T_{t4} - T_{t3} \right)$$

Differentiating the substitution yields;

$$\frac{\partial \Delta T_b}{\Delta T_b} = \frac{T_{t4}}{\Delta T_b}\frac{\partial T_{t4}}{T_{t4}} - \frac{T_{t3}}{\Delta T_b}\frac{\partial T_{t3}}{T_{t3}} \qquad \text{(II-19)}$$

and from Table 2, page 12;

$$\frac{\partial T_{t4}}{T_{t4}} = 0$$

therefore;

$$\frac{\partial W_f}{W_f} = \frac{\partial W_2}{W_2} - \frac{T_{t3}}{\Delta T_b}\frac{\partial T_{t3}}{T_{t3}} . \qquad \text{(II-20)}$$

Substituting again from Table 1, page 11, will produce Equations (II-21), (II-22), and (II-23) which agree with those equations derived by Urban and presented in Table 1.

$$\frac{\partial W_f/W_f}{\partial T_{t2}/T_{t2}} = -\frac{1+\mu}{2} - \frac{T_{t3}}{\Delta T_b}\left[\frac{\gamma+1}{2\gamma} - \frac{\gamma-1}{\gamma\eta_c}\frac{\mu}{2}\right] \qquad \text{(II-21)}$$

$$\frac{\partial W_f/W_f}{\partial P_{t2}/P_{t2}} = 1 \qquad \text{(II-22)}$$

$$\frac{\partial W_f/W_f}{\partial P_{amb}/P_{amb}} = 1 \qquad \text{(II-23)}$$

The basic relationship among the components of thrust in an altitude test cell is:

$$FN = FG - F_{ram} \qquad \text{(II-24)}$$

where;

$$F_{ram} = W_2 * V_0/g_c \qquad \text{(II-25)}$$

F_{ram} is the engine inlet momentum drag, sometimes called "ram drag". F_{ram} in an ATF is based on an inlet velocity, V_0, calculated as if the inlet air pressure recovery occurs isentropically from P_{amb} to P_{t2}. Gross thrust is calculated from test cell force measurements and the calculation is presented in Equation (II-3).

$$FG = (W_g/g_c) * V_9 + A_9\left(P_{s9} - P_{amb}\right) \qquad \text{(II-26)}$$

For the equation above, W_g is the exhaust nozzle exit plane mass flow rate. V_9 is the exhaust nozzle exit plane velocity. The term, A_9 (P_{s9} - P_{amb}), is generally assumed to be zero (perfect expansion) for an engine with an axisymmetric convergent-divergent exhaust nozzle. This assumption is used in this research but for engines using other exhaust nozzle configurations, this pressure-area term may need to be considered.

Equation (II-4) is the expanded equation for gross thrust based on commonly measured engine parameters. Taking the natural logarithm of both sides of Equation (II-4) facilitates easier differentiation:

$$\ell n\, FG = \ell n(W_g/g_c) + \ell n(g_c J) + \frac{1}{2}\,\ell n\left(C_p T_{t5}\right) +$$

$$\ell n\left[1 - \left(P_{amb}/P_{t5}\right)^{(\gamma-1)/\gamma}\right] \qquad \text{(II-27)}$$

differentiating the above equation yields;

$$\frac{\partial FG}{FG} = \frac{\partial W_g}{W_g} + \frac{1}{2}\left[\frac{\partial \eta_n}{\eta_n} + \frac{\partial T_{t5}}{T_{t5}} + \Phi_n\left(\frac{\partial P_{t5}}{P_{t5}} - \frac{\partial P_{amb}}{P_{amb}}\right)\right]. \qquad \text{(II-28)}$$

Equation (II-28) presents a differential FG normalized to the baseline (unadjusted) value in terms of other more fundamental parameters that can be found in Table 2, page 12. Taking the right hand side parameters from Table 1, page 11, Equations (II-29), (II-30), and (II-31) are produced. The previous derivation of the gross thrust, FG, relationships was accomplished by Prufert, Loper, and McKamey [4] and is an original enhancement to the work done by Urban [2].

$$\frac{\partial FG/FG}{\partial T_{t2}/T_{t2}} = -\left(\frac{1+\mu}{2}\right) + \frac{1}{2}\left[\frac{\gamma-1}{\gamma}\left(\frac{1+\mu}{2}\,\frac{\alpha}{\Phi_t} - \frac{1}{\Phi_t}\right)\right.$$

$$\left. - \Phi_n\left(\frac{1+\mu}{2}\left(\frac{\Phi_t-\alpha}{\Phi_t}\right) + \frac{1}{\Phi_t}\right)\right| \qquad \text{(II-29)}$$

$$\frac{\partial FG/FG}{\partial P_{t2}/P_{t2}} = 1 + \frac{\Phi_n}{2} \qquad \text{(II-30)}$$

$$\frac{\partial FG/FG}{\partial P_{amb}/P_{amb}} = -\frac{\Phi_n}{2}\,. \qquad \text{(II-31)}$$

CHAPTER III

TRANSIENT DATA ADJUSTMENT

The Analytical Method of turbine engine data adjustment is based on the fundamental set of turbine engine cycle interrelationships derived by Urban [2]. The relationships were developed specifically for determining performance changes with respect to changes in the environmental parameters or to changes in the control for steady-state and transient engine operation. Since adjusting test data from an ATF is primarily concerned with changes in the engine operating environment, these relationships were easily adapted as data adjustment methods for transient engine testing.

The Analytical method compensates for variations in inlet (P_{t2} and T_{t2}) and exit (P_{amb}) conditions and assumes that inlet variations propagate throughout the engine. It also assumes that, for a turbofan engine, the inlet variations do not affect fan rotational speed [5]. The method is applied discreetly to each point in time to produce the adjusted, time-dependent response for each performance parameter.

The generic equations for data adjustment using the Analytical Method are:

$$X_{adj} = X_{meas} * \left(1 + \frac{DX}{X}\right) \qquad \text{(III-1)}$$

$$\frac{DX}{X} = \frac{\partial X/X}{\partial P_{t2}/P_{t2}} \frac{\Delta P_{t2}}{P_{t2}} + \frac{\partial X/X}{\partial T_{t2}/T_{t2}} \frac{\Delta T_{t2}}{T_{t2}} + \frac{\partial X/X}{\partial P_{amb}/P_{amb}} \frac{\Delta P_{amb}}{P_{amb}} \qquad \text{(III-2)}$$

In Equations (III-1) and (III-2), "X" can be any of the performance parameters; FG, W_2, W_f, or P_{S3}. The adjusted value of each parameter, X_{adj}, is determined from the measured value, X_{meas}, the environmental variations; $\Delta P_{t2}/P_{t2}$, $\Delta T_{t2}/T_{t2}$, $\Delta P_{amb}/P_{amb}$, and from the influence of the environmental conditions on performance;

$$\frac{\partial X/X}{\partial P_{t2}/P_{t2}}, \frac{\partial X/X}{\partial T_{t2}/T_{t2}}, and \frac{\partial X/X}{\partial P_{amb}/P_{amb}}$$

The influence of each environmental parameter on the performance parameter in question, is determined from Table 1, page 11.

The environmental variations are defined in terms of the fractional percent difference between the actual and the specified condition. The P_{t2} variation is therefore:

$$\frac{\Delta P_{t2}}{P_{t2}} = \frac{P_{t2(specified)} - P_{t2(actual)}}{P_{t2(specified)}} \qquad \text{(III-3)}$$

$\Delta T_{t2}/T_{t2}$ and $\Delta P_{amb}/P_{amb}$ are calculated in the same manner.

Adjusted values for net thrust, FN, and (time-to-thrust), ΔtFN, are calculated from other adjusted parameters. Adjusted FN is calculated by:

$$FN_{adj} = FG_{adj} - \left(W_{2adj} * V_{0\,specified}/g_c\right) \qquad \text{(III-4)}$$

FG_{adj} and W_{2adj} are determined from Table 1. Free-stream velocity, $V_{0specified}$, is calculated isentropically using the specified environmental conditions and ΔtFN_{adj} is determined from the response of FN_{adj} with time.

Similarly, specific fuel consumption (SFC) can be adjusted using adjusted fuel flow (Wf adj) and adjusted net thrust (FN_{adj}):

$$SFC_{adj} = \frac{W_{f\,adj}}{FN_{adj}}. \qquad \text{(III-5)}$$

Other performance and operability parameters such as rotor speeds, and the operating lines of the fan and the compressor do not appear to be significantly influenced by normal variations of environmental conditions from specified values and therefore do not require adjustments.

CHAPTER IV

RESULTS OF ANALYTICAL ADJUSTMENTS

Chappell and McKamey [5] have previously demonstrated the Analytical Method and presented results. Figure 5 represents a typical engine operating envelope over which the method was demonstrated.

The operating envelope of Figure 5 can be divided into subregions of specific interest. The lower left hand corner of the envelope (Region 1) by the high ambient pressures and temperatures that would be experienced near sea level at low speeds. In this region, engine starting and takeoff performance are the primary concerns. The lower right hand corner (Region 2) includes high recovery pressures and temperatures characteristic of low altitudes and high speeds. Engine durability is the main concern in this region. Region 3 (upper left hand corner) is a region of very low operating temperatures and pressures. Combustor stability is critical in Region 3. Region 4 (upper righ hand corner) includes characteristics found in both regions 2 and 3.

Point 1 is a sea-level-static condition. Point 2 is a low altitude, subsonic condition while point 3 is a low altitude supersonic condition. Point 4 is a medium altitude subsonic condition. Points 2, 3, and 4 could be used to gather data pertinent to either cruising or combat maneuvering flight. Points 5, 6, and 7 are at the limits of the operational envelope. Point 5 is at the dynamic (total) inlet pressure limit of the envelope. Point 6 is at the minimum dynamic pressure

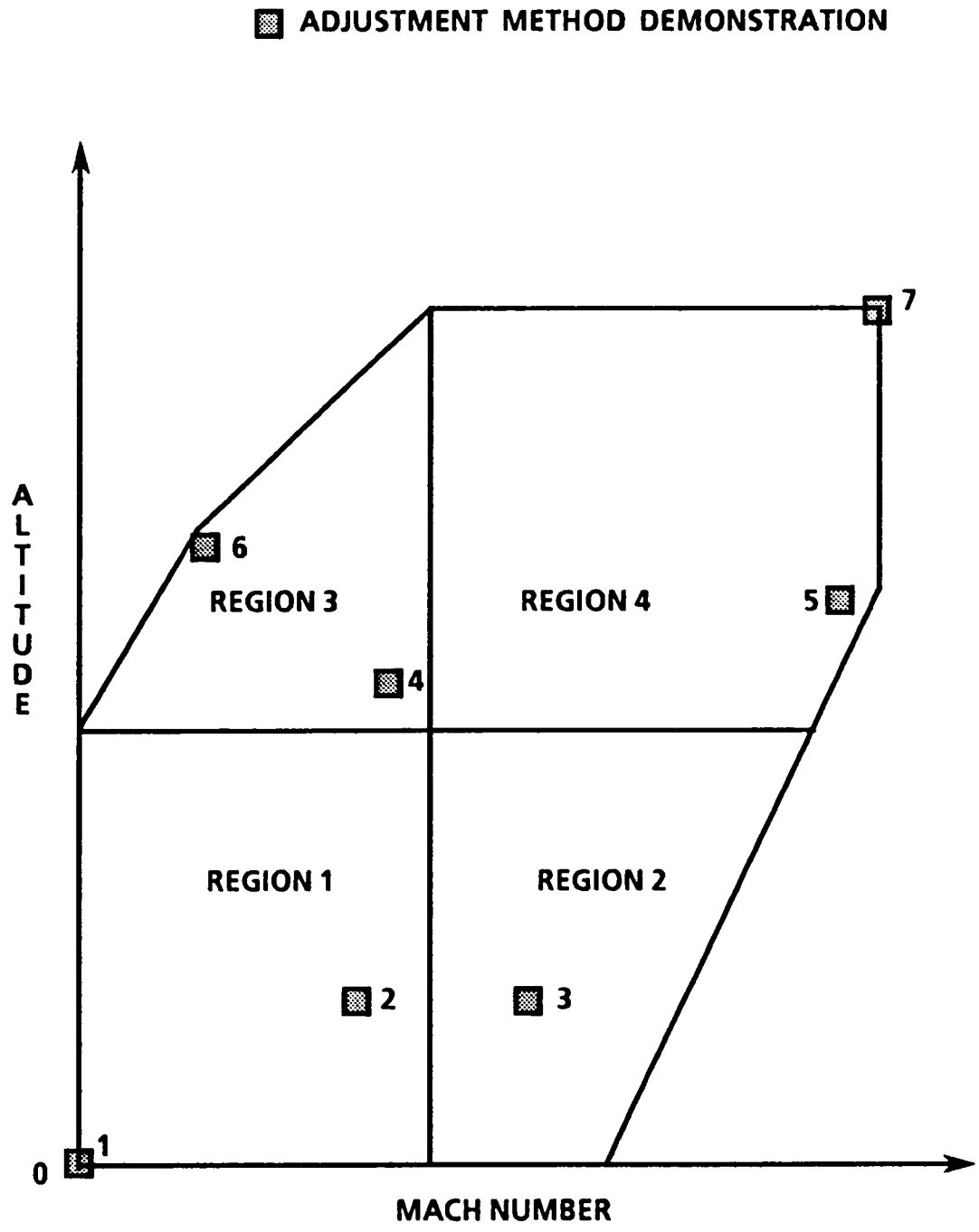

Figure 5. Typical Turbine Engine Operating Envelope

limit and point 7 is at both the maximum altitude and maximum Mach number limits of the envelope.

A mathematical model for a modern turbofan engine was used to simulate what are called "true" performance at specified environmental conditions and "as-tested" performance at actual conditions. It was necessary to use a mathematical model due to the fact that the model can simulate "as-tested" as well as "true" performance. An ATF would only produce what is defined here as "as-tested" performance.

"True" performance is the performance that would be observed if no variations in environmental conditions occurred and no errors were present in the instrumentation and data reduction systems. "True" performance as presented in this work was modeled using specified environmental conditions and control requests as inputs. "As-tested" performance is a prediction of what would be observed in an actual engine test where the environmental variations and the instrumentation errors are encountered.

"As-tested" performance was simulated by utilizing desired environmental conditions and the same control requests as inputs to the model. All of the environmental condition inputs were based on genuine engine tests.

Figure 6 illustrates the effects of environmental variations on time-to-thrust, ΔtFN. Time-to-thrust is defined as the time elapsed from throttle advance until thrust reaches 90 percent of the difference between IRP thrust and idle thrust. In this case (Point 2), the model

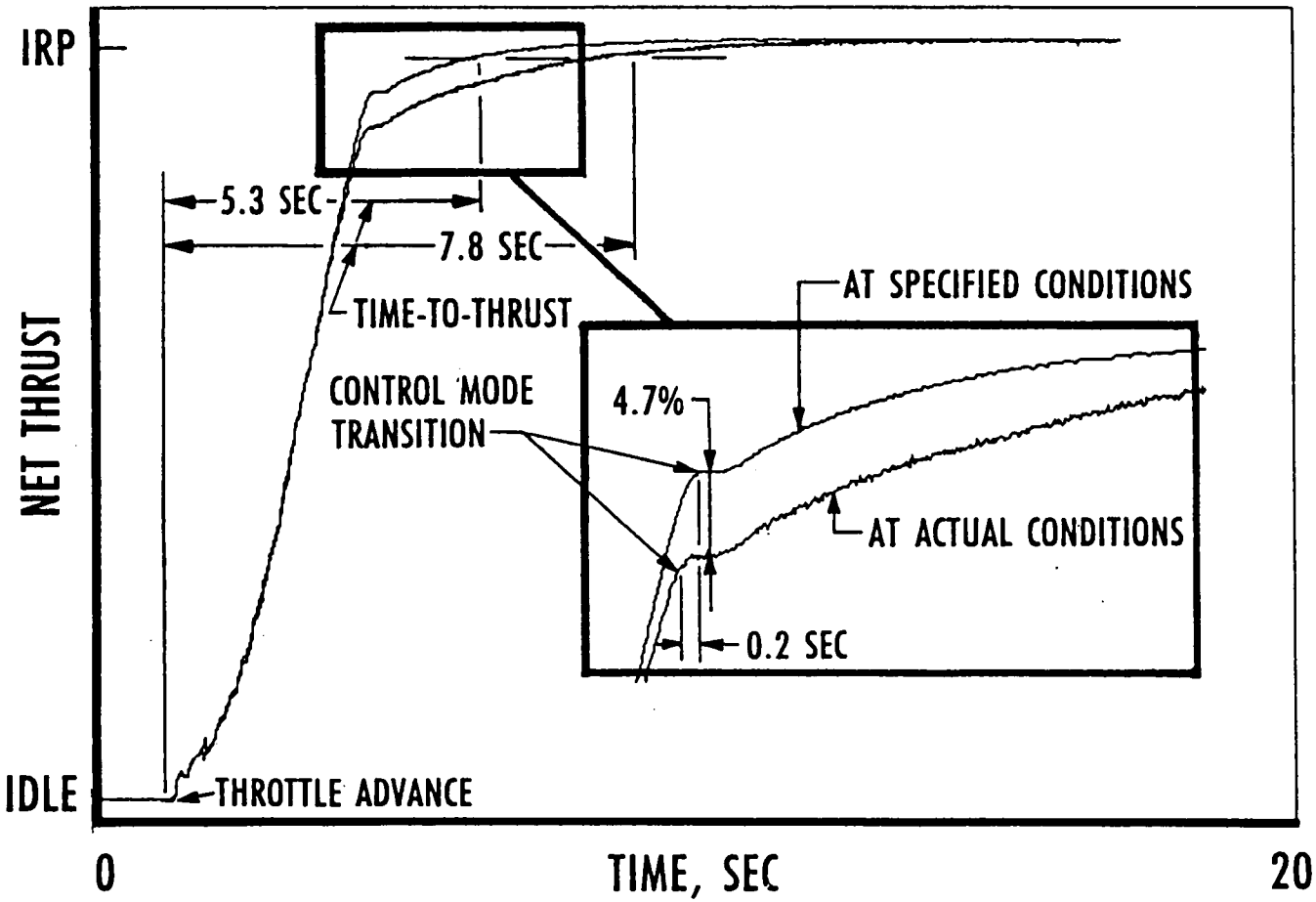

Figure 6. Effects of Environmental Variations on Net Thrust and Time to Thrust

predicted a 2.5 second difference in time-to-thrust from actual conditions to specified conditions.

One of the simplifying assumptions was that fan operating line was not affected by environmental variations within limits

$$\left(\frac{\Delta P_{t2}}{P_{t2}} \leq 18\ percent, \frac{\Delta P_{amb}}{P_{amb}} < 32\ percent. \frac{\Delta T_{t2}}{T_{t2}} < 1\ percent\right).$$

Figure 7 shows that the model predicts negligible differences in fan operating line for variations within the limits mentioned previously.

Figures 8-11 illustrate results typical of those obtained for points 1, 2, 4, 5, and 7 from the flight envelope in Figure 5. These were points where the Analytical Method was proven effective in offsetting the effects of environmental variations. These conditions included high and low altitude and high and low Mach number points. All throttle movements for these points were snap accelerations.

Chappell and McKamey [5] reported that the Analytical Method reduced the maximum thrust variation from 6.1 to 1.1 percent in a typical case (Figure 8). This, coupled with the visual observation of how closely the adjusted performance corresponds to the simulated "true" performance, is the foundation for declaring the Analytical Method effective for FN in this case.

The Analytical Method also reduced the effects of environmental variations on W_2, P_{S3}, and W_f shown in Figures 9, 10, and 11. In these Figures, the maximum shift in W_2 was reduced from 5.1 to 0.9 percent (Figure 9), from 5.7 to 1.2 percent for P_{S3} (Figure 10), and from 8.0

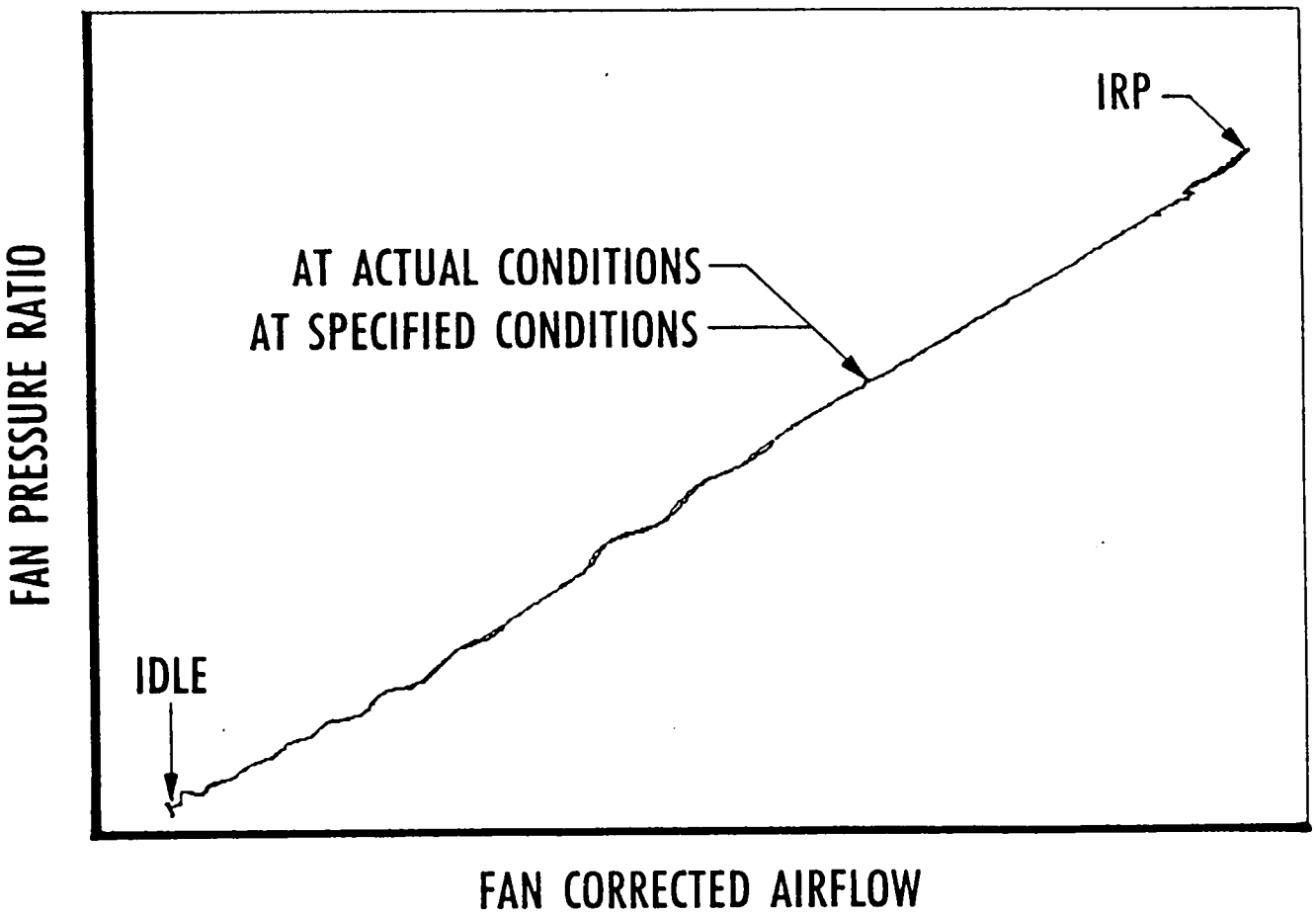

Figure 7. Effects of Environmental Variations on Fan Operating Line

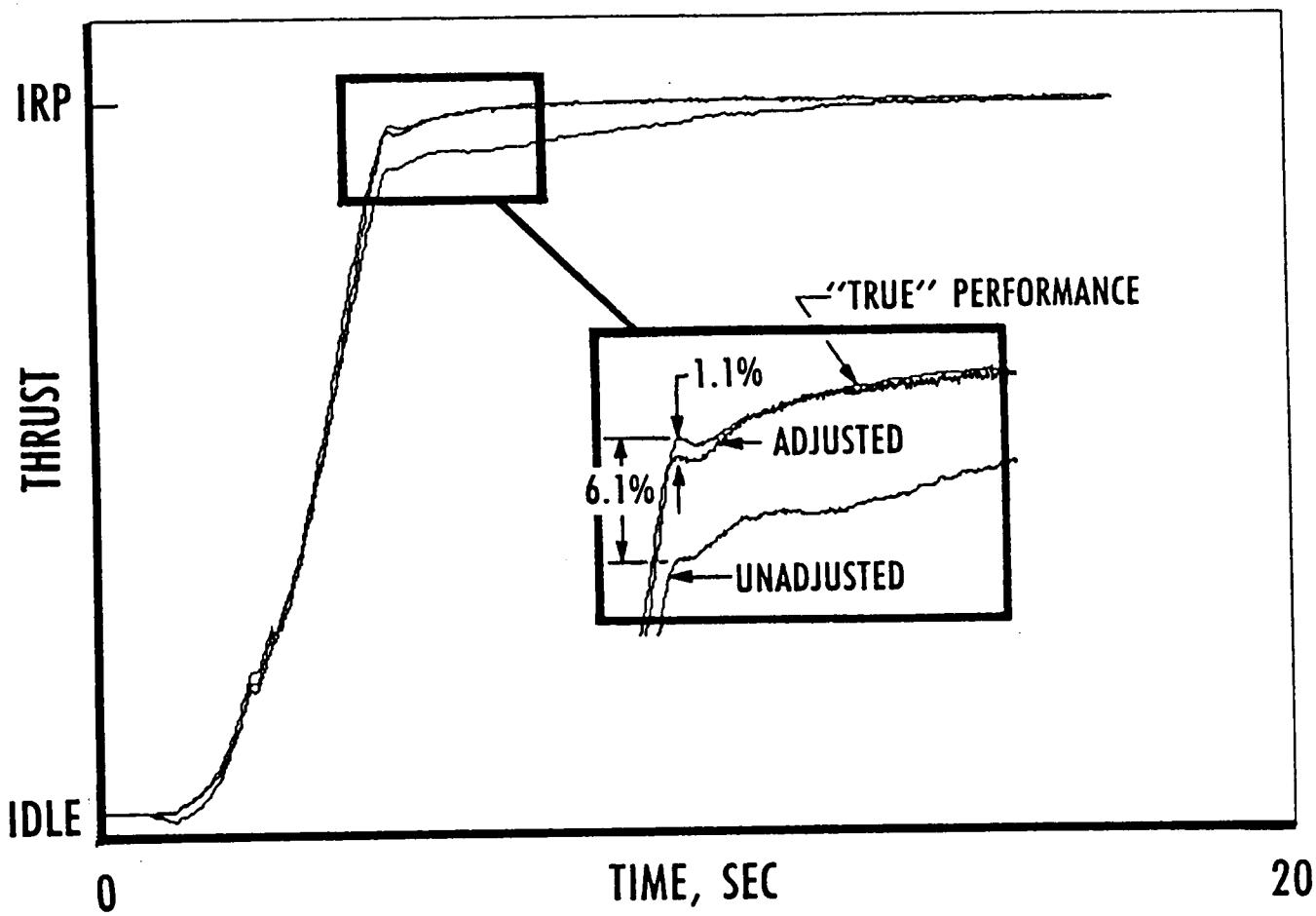

Figure 8. Analytical Method Adjustment to Net Thrust at Point 1

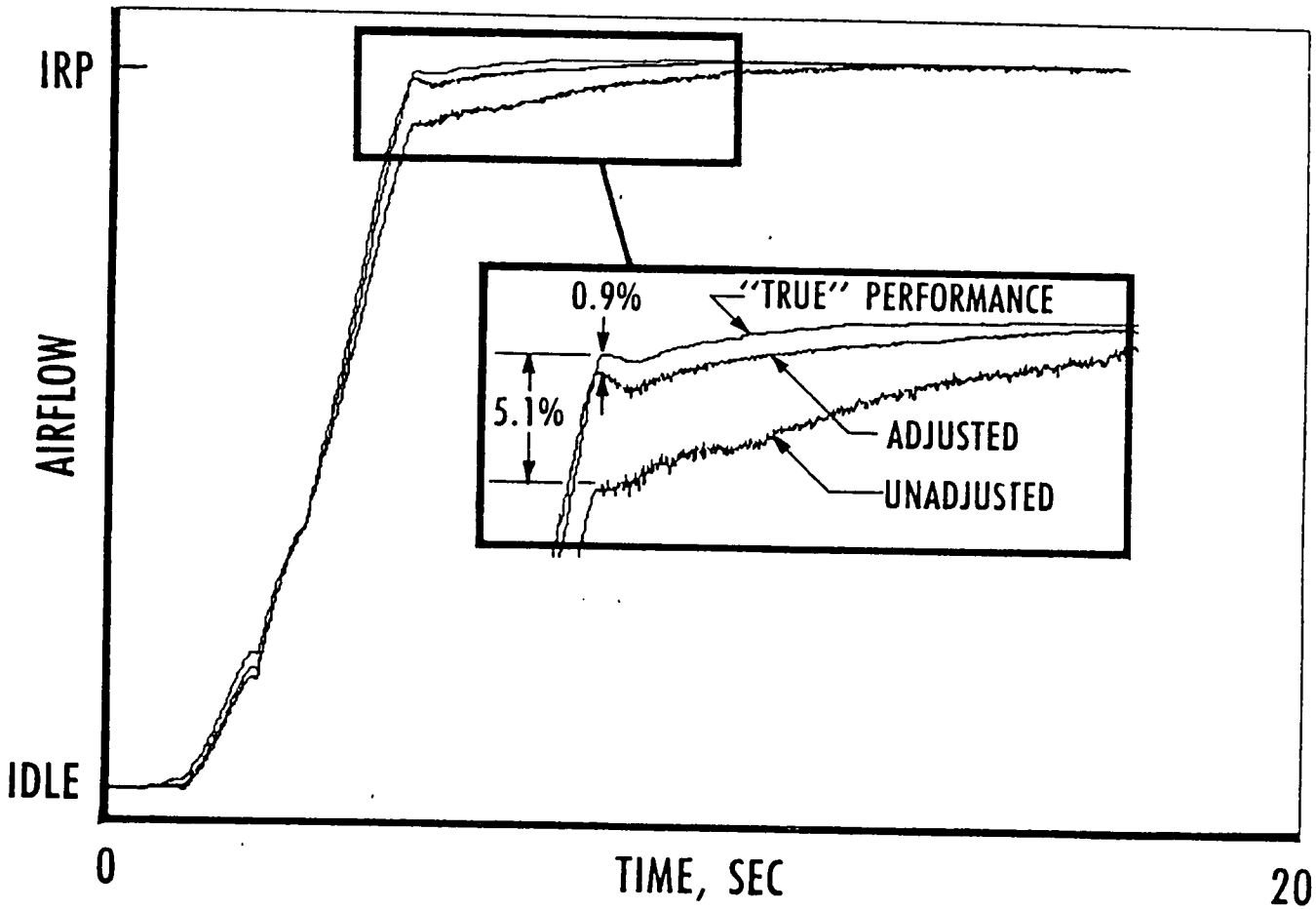

Figure 9. Analytical Method Adjustment to Airflow at Point 1

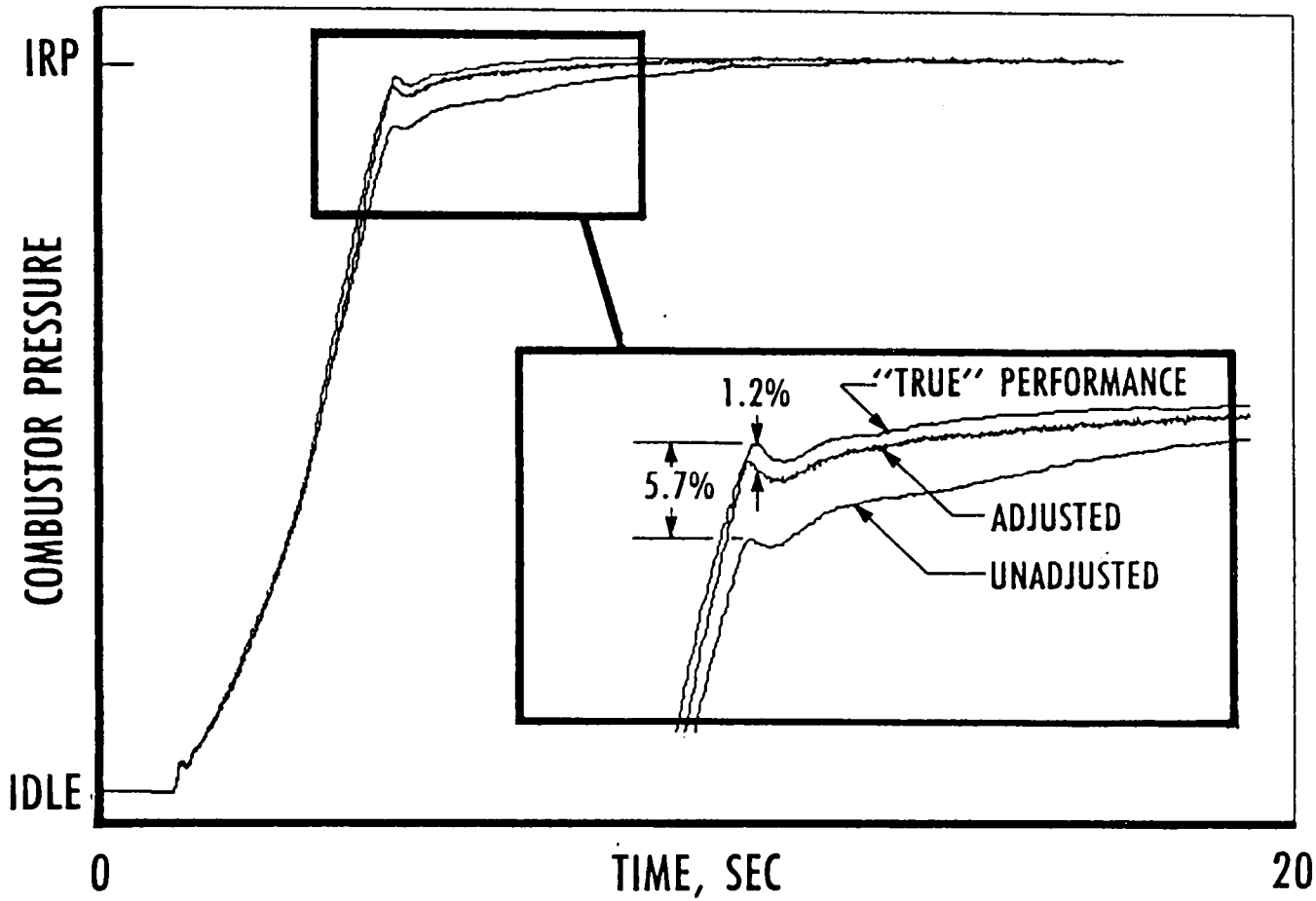

Figure 10. Analytical Method Adjustment to Burner Pressure at Point 1

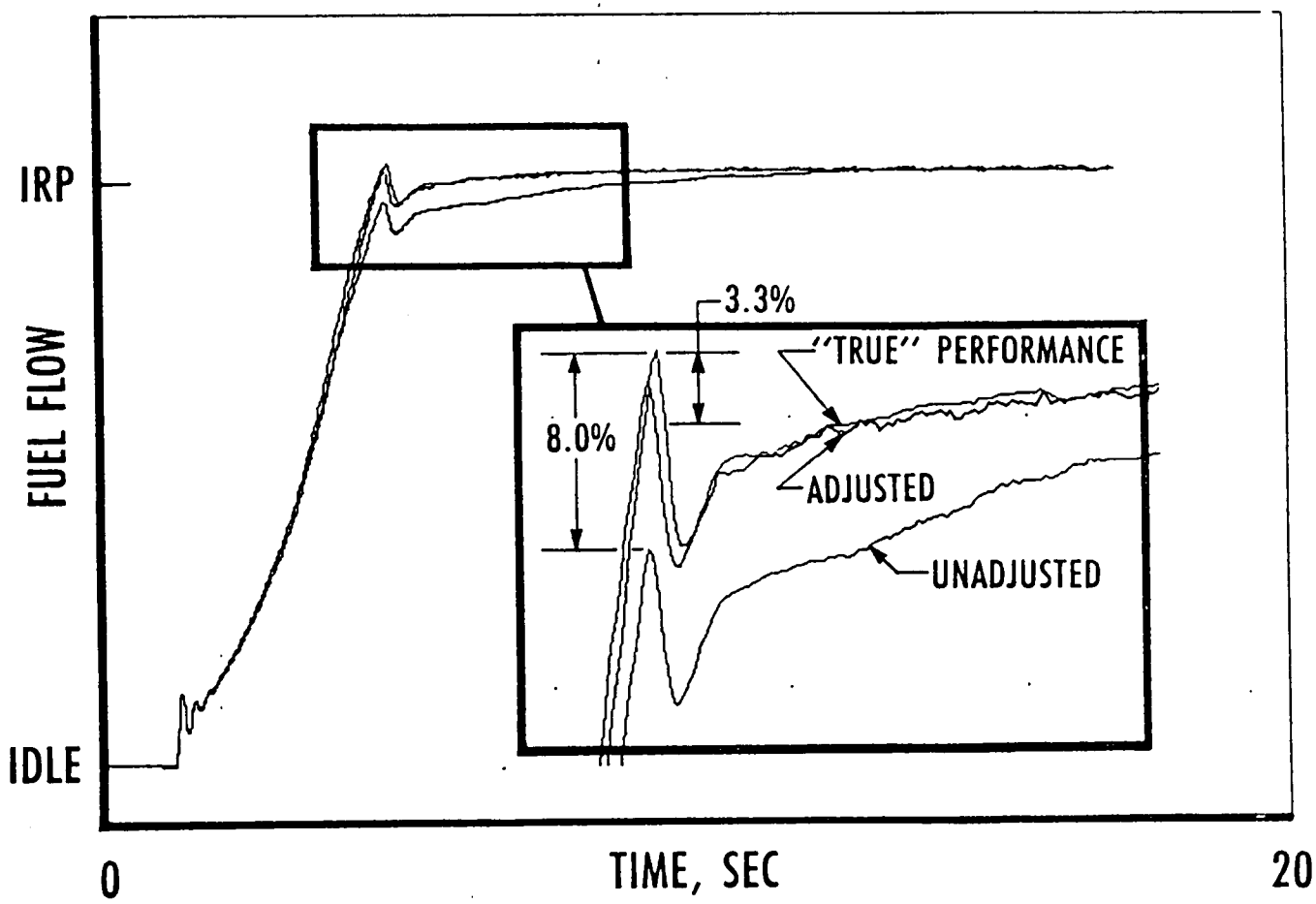

Figure 11. Analytical Method Adjustment to Fuel Flow at Point 1

to 3.3 percent for W_f (Figure 11). The general effects of environmental variations were mostly eliminated in these cases.

The results from points 3 and 6 of Figure 5 did not represent typical results from the investigation. Chappell and McKamey [5] found that engine operation at point 3 (low altitude, high speed) was subject to a burner pressure (P_{S3}) limit enacted by the engine control. This control intervention was found to inhibit the propagation of environmental variations through the engine. Therefore, performance adjustments at point 3 were less effective as shown in Figure 12. Chappell and McKamey [5] also observed that T_{t2} varied as much as 4 percent for point 6 while generally varying less than 1 percent for the remainder of points. The larger T_{t2} variation in point 6 caused a 1.5 percent variation in fan rotational speed that compromised the assumption that fan speed was not affected by environmental variations. As a result, the Analytical Method was less effective on point 6 as shown in Figure 13.

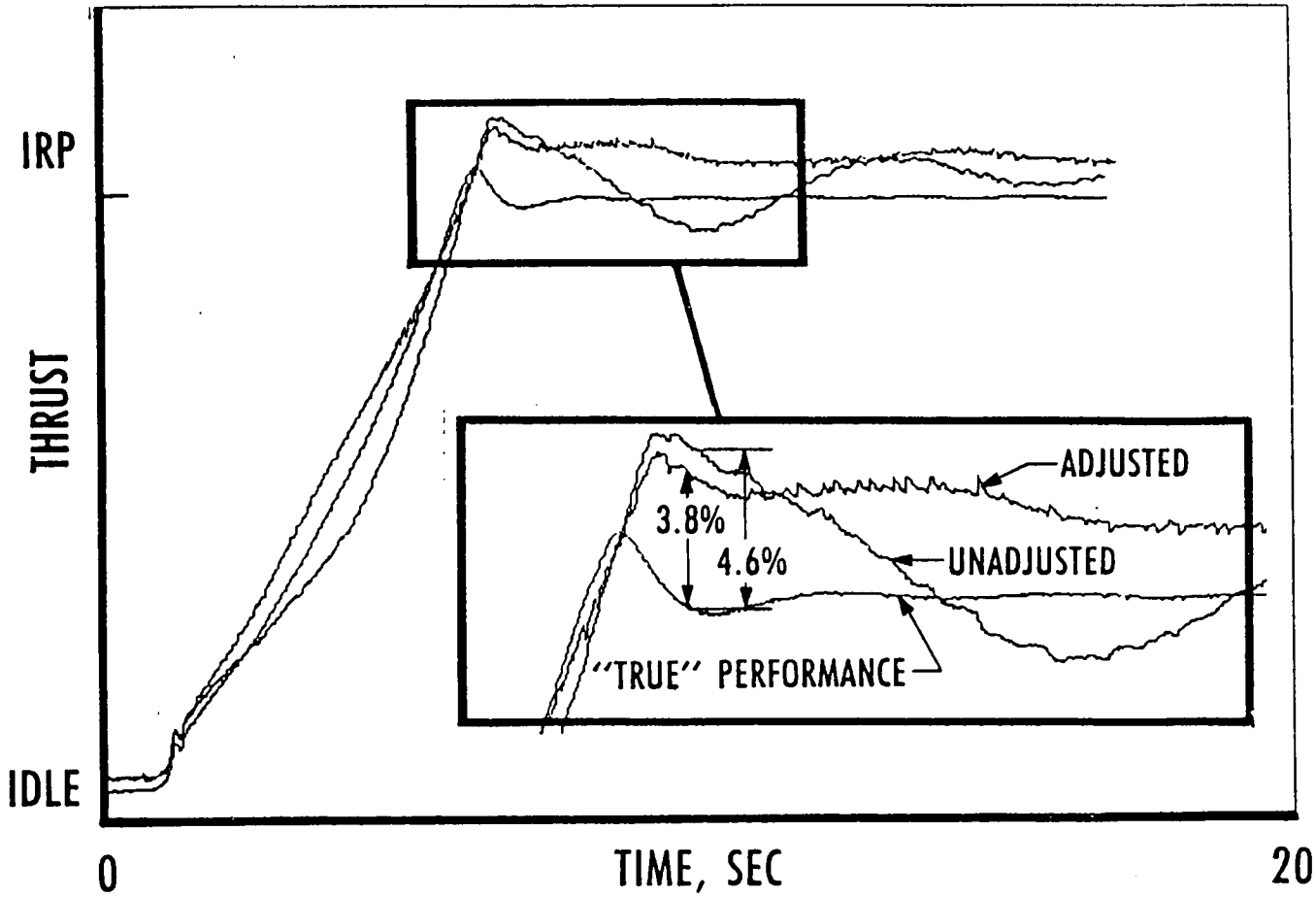

Figure 12. Decreased Effectiveness of Net Thrust Adjustment for T_{t2} Variations Greater Than One Percent

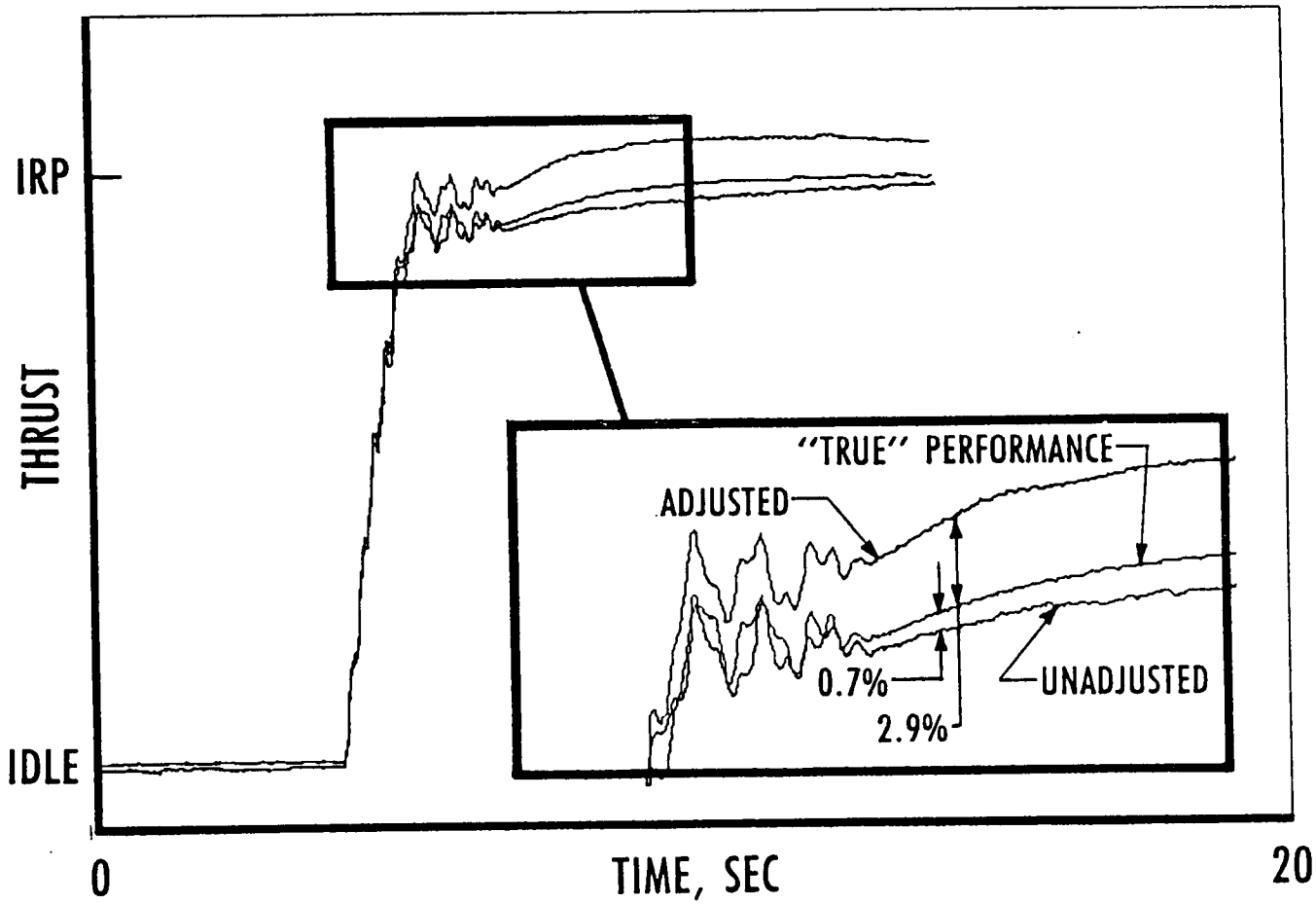

Figure 13. Decreased Effectiveness of Net Thrust Adjustment During Engine Control Intervention to Limit P_{S3}

CHAPTER V

SUMMARY AND RECOMMENDATIONS

The largest variations in the environmental conditions that were used in the demonstration were 18 percent for P_{t2}, 4 percent for T_{t2}, and 32 percent for P_{amb}. The Analytical Method was effective over the full range of P_{t2} and P_{amb} variations. It was also effective on data with T_{t2} variations of less than 1 percent. For T_{t2} variations of greater than 1 percent, the Analytical Method's effectiveness declined considerably. Chappell and McKamey [5] concluded that the application of the method required basic information that was not dependent on a specific engine configuration and they found no restrictions that would prevent application to other engine cycles.

Assumptions have been made by both the author [5] and by Louis Urban [2], who performed the groundwork for the present research. It was assumed throughout that fan speed and compressor operating line were not affected by environmental variations. Temperature variations of greater than one percent were shown in Figure 10 to adversely affect the adjustment method to the point that it magnified the effects of environmental variations instead of reducing them. Further expansion of this research into cycle specific (i.e., turbojet, turbofan, variable cycle) relationships might be able to expand the range of temperature variations over which this adjustment method is useful.

BIBLIOGRAPHY

BIBLIOGRAPHY

1. Mitchell, James G., "Fluid Dynamic Aspects of Turbine Engine Testing," Proceedings of AGARD-CP-348, Wind Tunnels and Testing Techniques, 1984.

2. Urban, Louis A., "Gas Turbine Engine Parameter Interrelationships," Hamilton Standard/United Aircraft Corporation ESP-8137, Second Edition, 1969.

3. Sanders, Newell D., "Performance Parameters for Jet-Propulsion Engines," NACA TN 1106, July 1946.

4. Prufert to McKamey, Private correspondence, 1990.

5. Chappell, Mark A. and McKamey, Robert S., "Adjusting Turbine Engine Transient Performance for the Effects of Environmental Variances," AIAA 90-2501, July 1990.

6. Wehofer, Sam and Rivir, R., "Measurement of Turbine Engine Transient Airflow in Ground Test Facilities," AEDC-TR-80-21, August 1980.

VITA

Robert Stephen McKamey was born August 24, 1961 at Oak Ridge, Tennessee. He received primary and secondary education in that city and was graduated from Oak Ridge High School on June 6, 1979. After spending five weeks of 1979 touring thirteen European countries, he entered the University of Tennessee, Knoxville, and in June 1985 he received a Bachelor of Science degree in Aerospace Engineering.

After joining Sverdrup Technology, Inc. in September 1985, he entered Graduate School at the University of Tennessee Space Institute.

The author is a member of Acacia, American Institute of Aeronautics and Astronautics, Aircraft Owners and Pilots Association, and the Experimental Aircraft Association.