To the Graduate Council:

I am submitting herewith a thesis written by Yachna Sharma entitled "Performance Study of Hybrid Spread Spectrum Techniques." I have examined the final electronic copy of this thesis for form and content and recommend that it be accepted in partial fulfillment of the requirements for the degree of Master of Science, with a major in Electrical Engineering.

Mostofa K. Howlader
Major Professor

We have read this thesis
and recommend its acceptance:

Michael J. Roberts

J. Reece Roth

Stephen F. Smith

Accepted for the Council:

Anne Mayhew
Vice Chancellor and
Dean of Graduate studies

(Original signatures are on file with official student records.)

PERFORMANCE STUDY OF HYBRID SPREAD SPECTRUM TECHNIQUES

A Thesis
Presented for the
Master of Science
Degree
The University of Tennessee, Knoxville

Yachna Sharma
December 2005

Dedication

Dedicated to my mother-in-law Mrs. Saroj Sharma,
who was kind enough to care for my son Varen, while I pursued my Masters at UT, Knoxville.

Acknowledgements

I would like to thank a number of people whose help and guidance have helped me reach this milestone. I wish to express deep appreciation to my major professor, Dr. Mostofa Howlader for his encouragement, guidance, and support. Through courses and detailed discussions, Dr. Howlader has provided the background on which this work was based and also the inspiration for carrying this work to completion. I would also like to express my gratitude to Dr. Michael J. Roberts, Dr. J. Reece Roth and Dr. Stephen F. Smith, who graciously agreed to take their precious time, serving on my thesis committee and offering many valuable suggestions.

This research work has been performed in the Wireless Communications Research Group (WCRG) at University of Tennessee, Knoxville, sponsored by the RF & Microwave System Group (RFMSG) of the Oak Ridge National Laboratory (ORNL) under the contract UT-B 4000025441 and UT research account number R011344113. I am also especially indebted to Dr. Paul Ewing, leader of the RFMSG, who has provided me with this great opportunity. Special thanks go to my friends in Wireless Communications Research Group (WCRG), Nasim, Bira, Chad, Josh and Jack for their support, encouragement and creation of a nice work environment. My gratitude towards my husband, Mayank, can be hardly expressed. I could not have made it without his continuing belief in all my abilities.

Abstract

This thesis focuses on the performance analysis of hybrid direct sequence/slow frequency hopping (DS/SFH) and hybrid direct sequence/fast frequency hopping (DS/FFH) systems under multi-user interference and Rayleigh fading. First, we analyze the performance of direct sequence spread spectrum (DSSS), slow frequency hopping (SFH) and fast frequency hopping (FFH) systems for varying processing gains under interference environment assuming equal bandwidth constraint with Binary Phase Shift Keying (BPSK) modulation and synchronous system. After thorough literature survey, we show that hybrid DS/FFH systems outperform both SFH and hybrid DS/SFH systems under Rayleigh fading and multi-user interference. Also, both hybrid DS/SFH and hybrid DS/FFH show performance improvement with increasing spreading factor and decreasing number of hopping frequencies.

Table of Contents

Chapter 1 1
Introduction 1
1.1 Trends in Wireless Communication Systems 2
1.2 Major Challenges for Wireless Communication Systems 4
1.3 Wireless Systems Based On Spread Spectrum Technology 6
1.3.1 Cellular Telephone Systems 6
1.3.2 Wireless Local Area Networks (LANs) 8
1.3.3 Cordless Phones 9
1.3.4 Low-Power Radios: Bluetooth and Zigbee 10
1.4 Spectrum Allocation for Wireless Services 11
1.5 Multiple Access Fundamentals 13
1.6 Spread Spectrum Communications 15
1.7 Attributes of Spread Spectrum Communication Systems 18
1.7.1 Types of SS Communication Systems 19
1.7.2 Carrier Recovery in SS Communication Systems 21
1.8 Advantages of Spread Spectrum Systems 21
1.9 Some Disadvantages of SS Communication Techniques 23
1.10 Need for Hybrid Spread Spectrum Systems 23
1.11 Analytical Approach 25
1.12 Organization of the Thesis 27
Chapter 2 28
Spread Spectrum Systems 28
2.1 Direct Sequence Spread Spectrum 29
2.1.1 Spreading Codes 31
2.1.2 Processing Gain and Interference Rejection in DSSS Systems 34
2.2 Frequency Hopping Spread Spectrum 37
2.2.1 Processing Gain in FHSS Systems 40
2.2.2 Frequency Hopping Sequences 40
2.3 Hybrid Spread Spectrum Systems 43
2.3.1 Processing Gain and Interference Rejection in Hybrid DS/FH Systems 44
2.4 Summary and Comparison 47
Chapter 3 48
Literature Review 48
3.1 Hybrid Spread Spectrum - Conclusions from Literature 49
3.2 What is missing? 58
3.3 Present Thesis – Goals 59
Chapter 4 60
System Models 60
4.1 Channel Model 61
4.1.1 Fading in Mobile Radio Channels 61

4.1.2 Channel Parameters 64
4.2 Simulation Technique and Assumptions 64
4.3 DSSS System Model 65
4.4 FHSS System Model 67
4.5 Slow and Fast Frequency Synthesis 70
4.6 Hybrid DS/FH Model 72
Chapter 5 77
Simulation Results 77
5.1 Direct Sequence Spread Spectrum: Performance Results 78
5.2 Slow Frequency Hopping: Performance Results 81
5.3 Fast Frequency Hopping: Performance Results 84
5.4 Hybrid DS/SFH: Performance Results 91
5.5 Hybrid DS/FFH: Performance Results 95
5.6 Comparative Analysis of Hybrid Slow and Fast Hopping Systems 97
Chapter 6 101
Conclusions and Future Work 101
Bibliography 104
Vita 110

List of Figures

Figure 1.1 : Three Principal Multiple Access Methods 14
Figure 1.2 : Analytical Approach..... 26

Figure 2.1 : (a) Schematic Representation of DSSS BPSK Transmitter Receiver (b) Time and Frequency Domain Signals at Transmitter..... 30
Figure 2.2: (a) Autocorrelation for Random PN Code with SF=128 (b) Cross correlation for Random PN Code with SF=128..... 33
Figure 2.3 : PN Sequence Generator..... 34
Figure 2.4 : (a) Schematic Representation of Transmitted Signal and Interference Power Levels. (b) Schematic Representation of Received Signal and Interference Power Levels 36
Figure 2.5 : RAKE Receiver Implementation with M Correlators..... 37
Figure 2.6 : Schematic Representation of FHSS BPSK Transmitter Receiver..... 38
Figure 2.7 : Concept of Slow and Fast Frequency Hopping..... 39
Figure 2.8 : Randomly Hopped BPSK Signal 41
Figure 2.9 : Interference in FHSS Systems..... 42
Figure 2.10 : Schematic Representation of Hybrid DS/FH Transmitter Receiver 44
Figure 2.11 : Concept of Hybrid Slow and Fast Hopping: (a) BPSK data signal (b) Hybrid DS/SFH with 2 bits/hop and one code sequence per symbol (c) Hybrid DS/SFH with 2 bits/hop and two code sequences per symbol (d) Hybrid DS/FFH with 2 hops/bit and one code sequence per symbol (e) Hybrid DS/FFH with 2 hops/bit and two code sequences per symbol..... 45
Figure 2.12 : Frequency Spectrum of Hybrid DS/FH System..... 46

Figure 4.1: DSSS Transmitter for *K* Users 66
Figure 4.2 : DSSS Receiver for *k*th User 68
Figure 4.3 : FH Transmitter for *k*th User 69
Figure 4.4 : FH Receiver for *k*th User..... 70
Figure 4.5 : Frequency Hopping Transmitter for *K* Users 71
Figure 4.6 : Flowchart for Frequency Synthesis..... 73
Figure 4.7 : Hybrid DS/FH Transmitter for *k*th User..... 75
Figure 4.8 : Hybrid DS/FH Receiver for *k*th User 75
Figure 4.9 : Hybrid DS/FH Transmitter for *K* Users 76

Figure 5.1 : Validation Performance of Various Spread Spectrum Techniques..... 78
Figure 5.2 : Performance of a Single User System in an AWGN and Rayleigh Fading Environment for Selected SFs. 80
Figure 5.3 : DSSS Performance in a Rayleigh Fading Environment for Varying Number of Users. 80

Figure 5.4 : DSSS Performance with Different SFs for 10 Users Under Rayleigh Fading 81
Figure 5.5 : Comparison of DSSS and SFH Performance in a Rayleigh Fading Environment..... 82
Figure 5.6 : SFH Performance in a Multi-user Interference and Rayleigh Fading Environment..... 83
Figure 5.7 : SFH Performance for 5 Users with Rayleigh Fading..... 84
Figure 5.8 : Rayleigh Fading Performance of a DSSS System for Even and Odd PN Sequences..... 86
Figure 5.9 : (a) Autocorrelation Function for Even and Odd Chipped PN Codes. (b) Magnified Autocorrelation Function. 87
Figure 5.10 : Comparison of SFH, FFH and DSSS Systems under Rayleigh Fading..... 88
Figure 5.11 : Performance of FFH System for Varying Number of Users..... 89
Figure 5.12 : Performance of FFH System for Different Hopping Rates..... 90
Figure 5.13 : Performance of FFH System with 5 Users and Varying Number of Hopping Frequencies 91
Figure 5.14 : DSSS, SFH, FFH and Hybrid DS/SFH under Rayleigh Fading 92
Figure 5.15 : Hybrid DS/SFH System for Varying N_f and SF under Rayleigh Fading . 93
Figure 5.16 : Performance of Hybrid DS/SFH System for Varying Number of Users 93
Figure 5.17 : Hybrid DS/SFH System for Varying N_f and SF for 5 Users 95
Figure 5.18 : Comparison of Hybrid DS/FFH with Other Systems under Rayleigh Fading 96
Figure 5.19 : Hybrid DS/FFH System for Varying N_f and SF under Rayleigh Fading .. 96
Figure 5.20 : Performance of Hybrid DS/FFH System for Varying Number of Users 98
Figure 5.21: Performance of Hybrid DS/FFH System for Varying N_f and SF under Rayleigh fading and 5 Users 98
Figure 5.22 : Comparison of Hybrid Slow and Fast Hopping under Multi-User Interference 99
Figure 5.23 : Comparison of Hybrid Slow and Fast Hopping for Varying N_f and SF.. 100

Chapter 1

Introduction

Wireless communication is one of the most vibrant research areas in the communication field today. While it has been a topic of study since the 60's, the past decade has seen a surge of research activities in the area. This is due to a combination of several factors as summarized by Tse in [1]. First is the explosive increase in demand for tether-less connectivity, in both cellular telephony and wireless data applications. The need for data communication for mobile users (for instance; at the airport, hospital, warehouse, hotel, home and restaurant) has accelerated the demand for wireless data communication systems. Second, the dramatic progress in very large scale integration (VLSI) technology has enabled small-area and low-power implementation of complicated signal processing algorithms and coding techniques. Third, the success of second-generation (2G) digital wireless standards, in particular the IS-95 Code Division Multiple Access (CDMA) standard, provided the starting point for evolution of more advanced third generation (3G) and most recently the 3.5G wireless technologies.

1.1 Trends in Wireless Communication Systems

Wireless communication is a field that has been around for over a hundred years, starting around 1897 with Marconi's successful demonstrations of wireless telegraphy. By 1901, radio reception across the Atlantic Ocean had been established. In the intervening hundred years, many types of wireless systems have flourished, and many of them were superseded by wired transmission [1]. For example, television transmission, in its early days, was broadcast by wireless radio transmitters, which is increasingly being replaced by cable transmission. Similarly, the point-to-point microwave circuits that formed the backbone of the telephone network are being replaced by optical fiber. An opposite trend where wired telephone network is being replaced by the wireless (cellular) technology is seen these days, particularly in those areas of the globe where the wired network is not well developed. This has not come as a surprise, given the many advantages of wireless communications and the ease of installation. A brief journey describing the development of various wireless systems is presented below.

Early radio systems transmitted mostly analog signals though some of them were digital also such as Morse code. AM and FM radio systems used frequency division multiple access (FDMA) for their simplex channels by using a unique frequency band for each radio station. In 1970's and early 1980's the Defense Advanced Research Projects Agency (DARPA) developed networks using packet radios for battlefield communication. In 1985 the Federal Communications Commission (FCC) enabled the commercial development of wireless local area networks (LANs) by authorizing the public use of the Industrial, Scientific, and Medical (ISM) frequency bands for wireless LAN products. The ISM band was very attractive to wireless LAN vendors since they did not need to obtain a FCC license to operate in this band. Initial wireless LANs had very poor performance in terms of data rates and coverage. The current generation of

wireless LANs, based on the family of IEEE 802.11 standards, have better performance, although the data rates are still relatively low (maximum collective data rates of tens of Mbps) and the coverage area is still small (around 150 m). In 1946 public mobile telephone service was introduced in 25 cities across the United States as reported by Goldsmith [5]. These initial systems used a central transmitter to cover an entire metropolitan area. This inefficient use of the radio spectrum along with the state of radio technology at that time severely limited the system capacity. Researchers at AT&T Bell Laboratories developed the ***cellular concept*** as a solution to this capacity problem during the 50's and 60's. Thus, two users could operate on the same frequency at spatially separate locations with minimal interference between them.

Besides cellular telephony, another area that has grown tremendously is wireless sensing systems. Commercial applications of wireless sensors include monitoring of fire hazards, hazardous waste sites, stress and strain in buildings and bridges, carbon dioxide movement and the spread of chemicals and gases at a disaster site. These wireless sensors can, in some cases, self-configure into a network to process and interpret sensor measurements and then convey this information to a centralized control location. Military applications include detection of chemical and biological attacks, identification and tracking of enemy targets, support of unmanned robotic vehicles, and counter-terrorism. Wireless networking also enables distributed control systems, with remote devices, sensors, and actuators linked together via wireless communication channels.

Wireless communication is thus an eclectic mix of various technologies and applications. There are many different ways to segment this complex topic into different applications and coverage regions or systems. Wireless applications include voice, Internet access, web browsing, paging and short messaging, subscriber information services, file transfer, video teleconferencing, entertainment, sensing, and distributed control. Systems include cellular telephone systems, wireless LANs, wide-area wireless data systems, satellite systems, and ad hoc wireless networks. Coverage regions include in-building, campus,

city, regional, and global. Different wireless applications have different requirements as evidenced by the many different wireless products, standards, and services being offered. Voice systems have relatively low data rate requirements (around 20 kbps) and can tolerate a fairly high probability of bit error (bit error rates, or BERs, of around 10^{-3}), but the total delay must be less than around 30 msec or it becomes noticeable to the end user. On the other hand, data systems typically require much higher data rates (1-100 Mbps) and very small BERs (the target BER is 10^{-8} and all bits received in error must be retransmitted). These diverse requirements for different applications make it difficult to build one wireless system that can efficiently satisfy all these requirements simultaneously. The exponential growth of cellular telephone use and wireless Internet access have led to great optimism about wireless technology in general.

1.2 Major Challenges for Wireless Communication Systems

As discussed above, wireless devices must incorporate multiple modes of operation to support the different applications and media. Computers process voice, image, text, and video data, but breakthroughs in circuit design are required to implement the same multimode operation in a cheap, lightweight, handheld device. Since consumers don't want large batteries that frequently need recharging, transmission and signal processing in the portable terminal must consume minimal power. The signal processing required to support multimedia applications and networking functions can be power-intensive. The finite bandwidth and unpredictable variations of wireless channels also requires robust applications that degrade gracefully as network performance deteriorates. Design of wireless networks differs fundamentally from wired network design due to the nature of the wireless channel. This channel is an unpredictable and difficult communications medium. Moreover, radio spectrum is a scarce resource that must be allocated to different applications and systems. At frequencies around several gigahertzes, wireless radio components with reasonable size, power consumption, and cost are available.

However, the spectrum in this frequency range is extremely crowded. Thus, technological breakthroughs to make possible higher frequency systems with the same cost and performance would greatly reduce the spectrum shortage. However, propagation path loss at these higher frequencies is larger, thereby limiting range, unless directional antennas are used. As the signal propagates through a wireless channel, it experiences significant fluctuations in time if the transmitter, receiver, or surrounding objects are moving, due to changing reflections and attenuation. Thus, the characteristics of the channel appear to change approximately randomly with time, which makes it difficult to design reliable systems with guaranteed performance. Security is also more difficult to implement in wireless systems, since the airwaves are susceptible to interception by anyone with an RF antenna. To support applications like electronic commerce and credit card transactions, the wireless network must be secure against such listeners. Wireless networking is also a significant challenge. The network must be able to locate a given user wherever it is among billions of globally-distributed mobile terminals. It must then route a call to that user that moves at speeds of up to 100 km/hr. The finite resources of the network must be allocated in a fair and efficient manner relative to changing user demands and locations. Wireless links can exhibit very poor performance, and this performance along with user connectivity and network topology changes over time. In fact, the very notion of a wireless link is somewhat fuzzy due to the nature of radio propagation and broadcasting. The dynamic nature and poor performance of the underlying wireless communication channel indicates that high-performance networks must be optimized for this channel and must be robust and adaptive to its variations, as well as to network dynamics. An overview of wireless systems is presented next.

1.3 Wireless Systems Based On Spread Spectrum Technology

This section provides a brief overview of current wireless systems based on spread spectrum modulation. The design details of these systems are constantly evolving, with new systems emerging and old ones becoming obsolete.

1.3.1 Cellular Telephone Systems

Cellular telephone systems are extremely popular and lucrative worldwide: these are the systems that ignited the wireless revolution. Cellular systems provide two-way voice and data communication with regional, national, or international coverage. The basic premise behind cellular system design is ***frequency reuse***, which exploits the fact that signal power falls off with distance. Thus, same frequency can be used in widely separated areas [4]. The roots of this system began in 1915, when wireless voice transmission between New York and San Francisco was first established. The first generation of cellular systems used analog communications, since they were primarily designed in the 1960's, before digital communications became prevalent. The first generation (1G) cellular systems in the U.S., called the Advanced Mobile Phone Service (AMPS), used FDMA with 30 kHz FM-modulated voice channels. A similar system, the European Total Access Communication System (ETACS), emerged in Europe. AMPS was deployed worldwide in the 1980's and remains the only cellular service in some of these areas, including some rural parts of the U.S. Throughout the late 1980's, as more and more cities became saturated with demand for cellular service, the development of digital cellular technology for increased capacity and better performance became essential. The second generation of cellular systems, first deployed in the early 1990's, were based wholly on digital communications. Second-generation systems moved from analog to digital due to its many advantages. The components are cheaper, faster, smaller, and

require less power. Voice quality is improved due to error correction coding. Digital systems also have higher capacity than analog systems since they can use more spectrally-efficient digital modulation and more efficient techniques to share the cellular spectrum. They can also take advantage of advanced compression techniques and voice activity factors. Other factors that make digital systems attractive are their better immunity to noise, their programmability and economy due to the integration of millions of digital logic elements on a single miniature chip forming low cost integrated circuits (ICs). Digital systems can also offer data services in addition to voice, including short messaging, email, Internet access, and imaging capabilities (camera phones). All of the second-generation digital cellular standards have been enhanced to support high-rate packet data services [5]. The great market potential for cellular phones led to a proliferation of second-generation cellular standards. Many of the first-generation cellular systems in Europe were incompatible, and the Europeans converged on a uniform standard for second generation (2G) digital systems called GSM (Global System for Mobile). The GSM standard uses a combination of TDMA and ***slow frequency hopping*** with frequency-shift keying for voice modulation. In contrast, the U.S. developed several incompatible standards as part of its second-cellular generation. In particular, there are two standards in the 900 MHz cellular frequency band: IS-54, which uses a combination of TDMA and FDMA and phase-shift keyed modulation, and IS-95, which uses direct-sequence CDMA with binary modulation and coding [4]. The end result has been three different digital cellular standards for this frequency band: IS-136 (which is basically the same as IS-54 at a higher frequency), IS-95, and the European GSM standard. This proliferation of incompatible standards in the U.S. and internationally makes it impossible to roam between systems nationwide or globally without a multi-mode phone and/or multiple phones (and phone numbers). The third generation (3G) cellular systems are based on a wideband CDMA standard developed within the auspices of the International Telecommunications Union (ITU) [4]. The standard, initially called International Mobile Telecommunications 2000 (IMT-2000), provides different data rates

depending on mobility and location, from 384 kbps for pedestrian use to 144 kbps for vehicular use to 2 Mbps for indoor office use.

1.3.2 Wireless Local Area Networks (LANs)

Wirelesses LANs are becoming the preferred Internet access method in many homes, offices, and campus environments despite lower data rates than wired systems, due to their convenience and freedom from wires. LANs provide high-speed data within a small region, e.g. a campus or small building, as users move from place to place. Wireless devices that access these LANs are typically stationary or moving at pedestrian speeds. All wireless LAN standards in the U.S. operate in unlicensed frequency bands. The primary unlicensed bands are the ISM bands: 902-928 MHz, 2.400 -2.483.5 GHz and 5.800-5.925 GHz. The Unlicensed National Information Infrastructure (U-NII) bands are 5.15 – 5.25 GHz, 5.25 – 5.35 GHz and 5.725 – 5.825 GHz. In the ISM bands unlicensed users are secondary users so they must cope with interference from primary users when such users are active. Wireless LANs can have either a star architecture, with wireless access points or hubs placed throughout the coverage region, or a peer-to-peer architecture, where the wireless terminals self-configure into a network. Dozens of wireless LAN companies and products appeared in the early 1990's to capitalize on the growing demand for high-speed wireless data. These first generation wireless LANs mostly operated within the 26 MHz spectrum of the 902-928 MHz ISM band using ***direct- sequence spread spectrum***, with data rates on the order of 1-2 Mbps. The second generation of wireless LANs in the U.S. operates with 80 MHz of spectrum in the 2.4 GHz ISM band. A wireless LAN standard for this frequency band, the IEEE 802.11b standard, was developed to avoid some of the problems with the proprietary first-generation systems [5]. The standard specifies direct sequence spread spectrum with data rates of around 1.6 Mbps and a range of approximately 150 m. Many companies developed products based on the 802.11b standard, and after slow initial growth the popularity of 802.11b wireless LANs has expanded considerably. Many laptops come with integrated 802.11b wireless LAN cards. Companies and universities have installed

802.11b base stations throughout their locations, and many coffee houses, airports, and hotels offer wireless access, often for free, to increase their appeal. Two additional standards in the 802.11 family were developed to provide higher data rates than 802.11b. The IEEE 802.11a wireless LAN standard operates with 300 MHz of spectrum in the 5 GHz U-NII band. The 802.11a standard is based on multi-carrier modulation and provides 20-54 Mbps data rates. Since 802.11a has much more bandwidth and consequently many more channels than 802.11b, it can support more users at higher data rates. The other standard, 802.11g, also uses multi carrier modulation and can be used in either the 2.4 GHz or 5 GHz bands with speeds of up to 54 Mbps. Many wireless LAN cards and access points support all three standards to avoid incompatibility [5].

1.3.3 Cordless Phones

Cordless phones were originally designed to provide a low-cost low-mobility wireless connection to the PSTN (Public Switched Telephone Network), i.e. a short wireless link to replace the cord connecting a telephone base unit and its handset [5]. Many cordless phones use ***spread spectrum techniques*** to reduce interference from other cordless phone systems and from other systems like baby monitors and wireless LANs. In Europe and Asia the second generation of digital cordless phones (CT-2, for cordless telephone, second generation) have an extended range of use beyond a single residence or office. Another cordless telephone designed primarily for office buildings is the European DECT (Digital European Cordless Telephone) system. The DECT system accommodates data and voice transmissions for office and business users [4]. A more advanced cordless telephone system that emerged in Japan is the Personal Handy phone System (PHS). The PHS system is quite similar to a cellular system, with widespread base station deployment supporting handoff and call routing between base stations [5]. The main difference between a PHS system and a cellular system is that PHS cannot support call handoff at vehicle speeds [5].

1.3.4 Low-Power Radios: Bluetooth and Zigbee

As radios decrease their cost and power consumption, it becomes feasible to embed them in more types of electronic devices, which can be used to create smart homes, sensor networks, and other compelling applications. Two radios have emerged to support this trend: Bluetooth and Zigbee. The Bluetooth standard is named after Harald I Bluetooth, the king of Denmark between 940 and 985 AD, who united Denmark and Norway. Bluetooth radios provide short range connections between wireless devices along with rudimentary networking capabilities. The Bluetooth standard was developed jointly by 3Com, Ericsson, Intel, IBM, Lucent, Microsoft, Motorola, Nokia, and Toshiba. The standard has now been adopted by over 1300 manufacturers, and many consumer electronic products incorporate Bluetooth, including wireless headsets for cell phones, wireless USB or RS-232 connectors and wireless set-top boxes. The Bluetooth standard is based on a tiny microchip incorporating a radio transceiver that is built into digital devices [5]. The transceiver takes the place of a connecting cable for devices such as cell phones, laptop and palmtop computers, portable printers and projectors, and network access points. Bluetooth is mainly used for short range communications, e.g. from a laptop to a nearby printer or from a cell phone to a wireless headset. Its normal range of operation is 10 m (at 1 mW transmit power), and this range can be increased to 100 m by increasing the transmit power to 100 mW [5]. The system operates in the unlicensed 2.45 GHz frequency band; hence it can be worldwide without any licensing issues. The Bluetooth standard provides one asynchronous data channel at 723.2 Kbps. In this mode, also known as Asynchronous Connection-Less, or ACL, there is a reverse channel with a data rate of 57.6 Kbps. The specification also allows up to three synchronous channels each at a rate of 64 Kbps. This mode, also known as Synchronous Connection Oriented or SCO, is mainly used for voice applications such as headsets, but can also be used for data. These different modes result in an aggregate bit rate of approximately 1 Mbps. Routing of the asynchronous data is done via a packet switching protocol based on ***frequency hopping*** at 1600 hops per second. There is also a circuit switching protocol for the synchronous data. Bluetooth uses frequency-hopping for multiple access with a

carrier spacing of 1 MHz. Up to 79 different frequencies are used, for a total bandwidth of 80 MHz. The ZigBee radio specification is designed for lower cost and power consumption than Bluetooth as recorded by Poole [9]. ZigBee takes its name from the dance that honey bees use to communicate information about new-found food sources to other members of the colony [5]. The specification is based on the IEEE 802.15.4 standard. The radio operates in the same ISM band as Bluetooth, and is capable of connecting 255 devices per network. The specification supports data rates of up to 250 kbps at a range of up to 30 m. These data rates are slower than Bluetooth, but in exchange the radio consumes significantly less power with a larger transmission range. The goal of ZigBee is to provide radio operation for months or years without recharging, thereby targeting applications such as sensor networks and inventory tags [5].

1.4 Spectrum Allocation for Wireless Services

Most wireless applications reside in the radio spectrum between 30 MHz and 30 GHz. These frequencies are natural for wireless systems since they are not affected by the earth's curvature, require only moderately sized antennas, and can penetrate the ionosphere [5]. The required antenna size for good reception is inversely proportional to the square of signal frequency, so moving systems to a higher frequency allows for more compact antennas. However, received signal power with non-directional antennas is proportional to the inverse of frequency squared, so it is harder to cover large distances with higher frequency signals. Spectrum is allocated either in licensed bands (which regulatory bodies assign to specific operators) or in unlicensed bands (which can be used by any system subject to certain operational requirements). Table 1.1 shows the licensed spectrum allocated to major commercial wireless systems in the U.S. today [5]. Table 1.2 shows the unlicensed spectrum allocations in the U.S [5]. ISM Band I has licensed users transmitting at high power that interfere with the unlicensed users. Therefore, the

Table 1.1 : Licensed Spectrum Allocation in United States

SERVICE	**FREQUENCY ALLOCATION**
AM Radio	535-1705 KHz
FM Radio	88-108 MHz
Broadcast TV (Channels 2-6)	54-88 MHz
Broadcast TV (Channels 7-13)	174-216 MHz
Broadcast TV (UHF)	470-806 MHz
3G Broadband Wireless	1.7-1.85 GHz, 2.5-2.69 GHz
1G and 2G Digital Cellular Phones	806-902 MHz
Personal Communications Service (2G Cell Phones)	1.85-1.99 GHz
Wireless Communications Service	2.305-2.32 GHz, 2.345-2.36 GHz
Satellite Digital Radio	2.32-2.325 GHz
Multi channel Multipoint Distribution Service	2.15-2.68 GHz
Digital Broadcast Satellite (Satellite TV)	12.2-12.7 GHz
Local Multipoint Distribution Service (LMDS)	27.5-29.5 GHz, 31-31.3 GHz
Fixed Wireless Services	38.6-40 GHz

Table 1.2: Unlicensed Spectrum Allocation in United States

SERVICE	**FREQUENCY ALLOCATION**
ISM Band I (Cordless phones, 1G WLANs)	902-928 MHz
ISM Band II (Bluetooth, 802.11b WLANs)	2.4-2.4835 GHz
ISM Band III (Wireless PBX)	5.725-5.85 GHz
NII Band I (Indoor systems, 802.11a WLANs)	5.15-5.25 GHz
NII Band II (short outdoor and campus applications)	5.25-5.35 GHz
NII Band III (long outdoor and point-to-point links)	5.725-5.825 GHz

requirement for unlicensed use of this band is highly restrictive and performance is somewhat poor.

1.5 Multiple Access Fundamentals

Spectral sharing in communication systems, also called ***multiple access***, is done by dividing the signaling dimensions along the frequency, time and/or code space axes. Three fundamental techniques for multiple access are diagrammatically represented in Figure 1.1. In ***frequency-division multiple access (FDMA)***, the total system bandwidth is divided into orthogonal frequency bands and each user is assigned a band. First generation cellular systems relied exclusively on FDMA and analog FM [4]. FDMA allows multiple users to access the communications channel by allotting two distinct frequency bands to each transmitter and receiver pair. The world's first cellular system implemented by Nippon Telephone and Telegraph (NTT) Company in Japan in 1979, used FDMA [4]. The Advanced Mobile Phone Service (AMPS), one of the first widely deployed cellular systems in U.S and The Extended European Total Access Cellular System (ETACS) in Europe also used FDMA successfully. In ***time-division multiple access (TDMA)***, time is divided orthogonally and each channel occupies the entire frequency band over its assigned timeslot. TDMA is more difficult to implement than FDMA since the users must be time-synchronized. However, it is easier to accommodate multiple data rates with TDMA since multiple timeslots can be assigned to a given user. In both TDMA and FDMA, strict orthogonality cannot be attained since finite length transmissions require infinite bandwidth and, conversely, a band limited signal requires an infinitely long transmission time. Therefore, in order to increase the orthogonality between users, ***guard zones*** are inserted. In the TDMA system, guard time is placed between the transmissions of different users during which no user can transmit. Likewise, in FDMA, guard bands are implemented between the user bands. A third method for allowing multiple users to share a time-frequency space is called ***Code-***

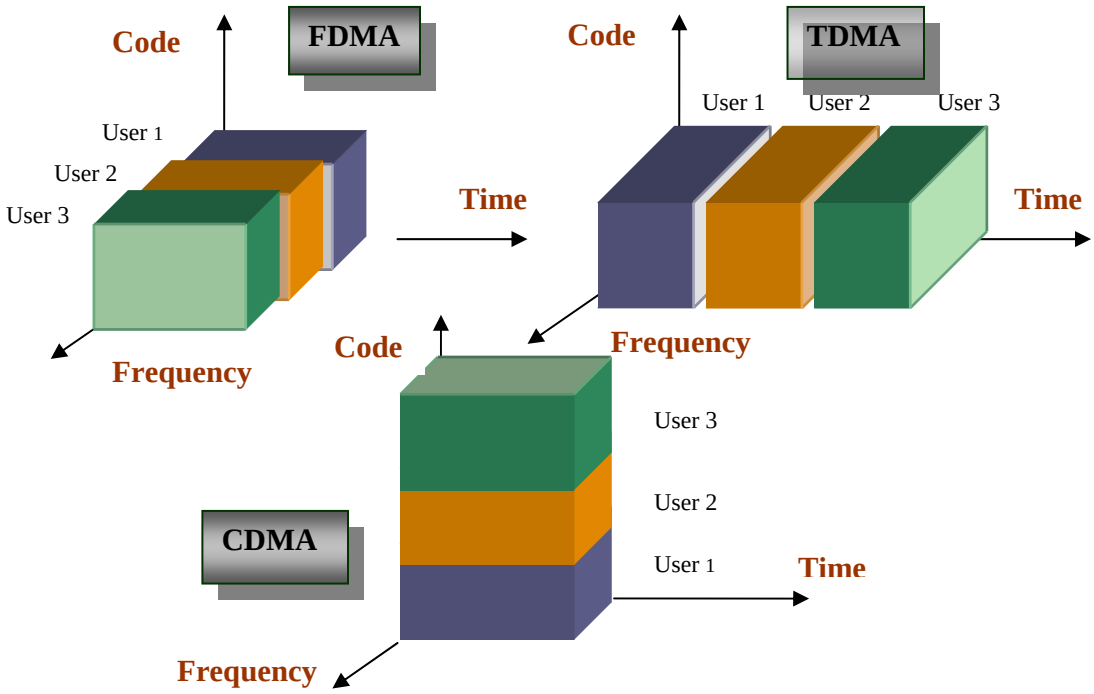

Figure 1.1 : Three Principal Multiple Access Methods

Division Multiple Access (CDMA). Cellular Telephone Standard IS-95 is based on CDMA. A CDMA system is based upon ***spread spectrum technology*** in which each user is assigned a unique spreading sequence (or code). Ideally, the cross correlations between the spreading sequences of distinct users should be zero. Under such conditions, when the desired user's signal is de-spread in the receiver by correlating the received signal with a local copy of the desired signal's spreading sequence, there will be no multi-user interference. Hassan et al. [14] reported that such complete orthogonality is impossible to attain with finite length transmissions. Therefore, spreading sequences are chosen for which the cross correlations are small between the sequences thus providing minimal multi-user interference. One advantage of CDMA is that very little control is required once the users are assigned their spreading sequences. Unlike in TDMA, synchronization of the users in time is not required and unlike FDMA, frequency assignments are not needed. Additionally, the performance of the channel degrades in an

orderly manner as the number of users increases, since additional users produce additional multi-user interference [14]. CDMA is typically implemented using ***direct-sequence spread spectrum (DSSS)***. In DSSS, each user modulates its data sequence by a different chip sequence, which is much faster than the data sequence. In the frequency domain, the narrowband data signal is convolved with the wideband chip signal, resulting in a signal with a much wider bandwidth than the original data signal. Typically spread spectrum signals are superimposed onto each other within the same signal bandwidth. A spread spectrum receiver separates out each of the distinct signals by separately decoding each spreading sequence. However, for non-orthogonal codes, users within a cell interfere among each other (intracell interference) and codes that are reused in other cells cause intercell interference. Both the intracell and intercell interference power is reduced by the spreading gain of the code. The design tradeoffs associated with spectrum sharing are very complex, and the decision of which technique is best for a given system and operating environment is never straightforward. While interference can arise from many sources, the one of primary concern is multi-user interference caused by the users in the channel interfering with each other. To minimize this interference, each of the transmissions should be as nearly orthogonal to others as possible and, in the ideal case; all signals would be completely orthogonal to each other.

1.6 Spread Spectrum Communications

As evident from Section 1.3, many of the current wireless systems are based on spread spectrum technology which will be the topic of discussion in current and following sections of this chapter. Designers of communication systems are often concerned with the efficiency with which the systems utilize the signal energy and bandwidth. In most communication systems these are the most important issues. In some cases, however, there exist situations in which it is necessary for the system to resist external interference, to operate at low spectral energy, to provide multiple access capability without external

control, and to provide a secure channel inaccessible to outside listeners. Thus, it is sometimes necessary to sacrifice some of the efficiency of the system in order to enhance these features. Spread spectrum techniques can accomplish such objectives. The theoretical aspects of using spread spectrum in a strong interference environment have been known for over forty years. Initially, spread spectrum techniques were developed for military purposes and their implementations were exceedingly expensive since more efficient digital code generators and frequency synthesizers were not available. The IEEE Spectrum of August, 1990 contained an article entitled *"Spread Spectrum Goes Commercial",* by Donald L. Schilling of City College of New York, Raymond L. Pickholtz of George Washington University and Laurence B. Milstein of UC San Diego which summarized the coming of commercial spread spectrum: "Spread-spectrum radio communications, long a favorite technology of the military because it resists jamming and is hard for an enemy to intercept, is now on the verge of potentially explosive commercial development. The reason: spread-spectrum signals, which are distributed over a wide range of frequencies and then collected onto their original frequency at the receiver, are so inconspicuous as to be 'transparent.' Just as they are unlikely to be intercepted by a military opponent, so are they unlikely to interfere with other signals intended for business and consumer users -- even ones transmitted on the same frequencies". The most significant event in development of spread spectrum came from the federal government in 1993 when the Federal Communications Commission (FCC) opened a frequency range from 2.40 to 2.48 Gigahertz for Industrial, Scientific, and Medical (ISM) applications. This band was considered unsuitable for any other type of communications except spread spectrum. That is due to the fact that the band is already contaminated by microwave ovens which operate at a primary frequency of 2.45 GHz. Because of its unique property of being immune to noise, spread spectrum is the ideal technology to operate in the "crowded" ISM band. Over the last eight or nine years a new commercial marketplace for spread spectrum has been emerging to provide secure digital communications. This marketplace is now being exploited for commercial and industrial purposes. New technological advances such as VLSI and advanced signal

processing techniques, made it possible to develop less expensive spread spectrum equipment for civilian use. Applications for commercial spread spectrum as given by Roberts in [3], range from "wireless" LAN's (computer to computer local area networks), to integrated bar code scanner/palmtop computer/radio modem devices for warehousing, RTLS (Real Time position Locating Systems) to track inventory, to digital dispatch, to digital cellular telephone communications, to city/area/state or country wide networks for communicating faxes, computer data, email, or multimedia data.

The two basic problems with which the cellular mobile radio system designer is faced are multipath fading of the radio link and interference from other users in the cellular reuse environment. DSSS waveforms can be used to either reject multipath returns that fall outside of the correlation interval of the spreading waveform, or enhance overall performance by diversity combining multipath returns in a RAKE receiver. Alternately, in frequency hopped (FH) spread spectrum, frequency diversity is obtained through coding the data and interleaving it over multiple-hops. Another consideration in using CDMA in cellular systems is the so-called ***reuse factor***. For non-spread multiple accessing techniques (i.e., FDMA and TDMA), frequencies used in a given cell are typically not used in immediately adjacent cells. This is done so that sufficient spatial isolation will exist to ensure cells using the same frequency will not cause excessive interference (i.e., co-channel interference) with one another. For example, in the analog AMPS system, a frequency reuse of one-in-seven is employed. However, with spread spectrum signaling, the possibility of a frequency reuse of one-in-one exists. Further, in a CDMA system, performance is typically limited by average (rather than worst-case) interference. For these reasons, in a multi cell system, CDMA is anticipated to have a larger capacity than either FDMA or TDMA.

Spread spectrum research for wireless communication systems is as exciting and interesting as it was 15 years ago since the demand and usage of wireless devices continues to increase. It will be hard to imagine “wireless-less” life in years to come as devices such as wireless sensor networks, real time position locating systems and of

course wireless LAN with high data rates are developed and deployed around the globe. Given the importance of the wireless communication industry in a country's economic and scientific development, it is essential to investigate the key detrimental effects in a wireless environment which, when rectified, can provide a better communication link. One important aspect that needs attention is the RF modulation scheme used for wireless connectivity. Many different modulation methods have been developed for different types of communication (whether data or voice) and various propagation conditions. An important aspect of a particular modulation scheme is its ability to thwart multiple-access interference, especially in a wireless environment in which the receiver is intercepted by signals from different users. Also, the growth of the personal communication industry requires an increased number of customers to share the available bandwidth. The characteristics of spread spectrum modulation that make it a popular RF modulation choice are discussed next.

1.7 Attributes of Spread Spectrum Communication Systems

A spread spectrum system is one in which the transmitted signal is spread over a wide frequency band, much wider than the minimum bandwidth required to transmit the information [1]. In other words, if R is the information rate in bits/sec and W is the bandwidth of a spread spectrum signal, then W>>R. Sklar [18] defines a spread spectrum system to be such if the following conditions are satisfied: a) the signal occupies a bandwidth much larger than the minimum bandwidth necessary to send the information. b) Spreading is accomplished by means of a spreading signal or code which is independent of the data. c) At the receiver, de-spreading is accomplished by the correlation of the received spread signal with a synchronized replica of the spreading signal used to spread the information.

1.7.1 Types of SS Communication Systems

Three important types of spread spectrum techniques are ***direct sequence spread spectrum (DSSS), frequency hopping spread spectrum (FHSS)*** and ***time hopping spread spectrum (THSS).*** In direct sequence spread spectrum, baseband data is spread by directly multiplying the data pulses with a ***pseudo noise*** (PN) sequence that is produced by a pseudo noise code generator. In case of spread spectrum (SS) systems, the pseudo noise sequence is known to the transmitter and intended receiver but appears random, with noise like properties, to other receivers in the system. In frequency hopping spread spectrum, the frequency of the carrier is periodically modified (hopped) following a specific sequence of frequencies obtained using a PN sequence generator. Frequency hopping may be ***slow frequency hopping (SFH)*** or ***fast frequency hopping (FFH)***. In slow frequency hopping, the frequency of the carrier remains unchanged over one or more symbol durations, whereas a fast frequency hopped signal is characterized by more than one carrier frequency within its symbol duration. The amount of time spent on each hop is known as ***"dwell time"***. Dixon [16] visualized time hopping spread spectrum as pulse modulation in which the code is used to key the transmitter on and off. Transmitter on and off times are therefore pseudorandom.

Various combinations of the above three techniques constitute ***Hybrid Spread Spectrum Systems (HSSS)*** such as *DS/FH* (combination of direct sequence and frequency hopping), *T/FH* (combination of time and frequency hopping) and *DS/TH* (combination of direct sequence and time hopping). The need for a DS/FH hybrid system is explained in Section 1.10. T/FH (time and frequency hopping) is suitable for those systems in which a large number of users with widely variable distances or transmitted power are to operate simultaneously in a single link and DS/TH is a useful way of adding time division multiplexing to aid in traffic control when code division multiplexing does not permit sufficient access to the link [16].

One of the most important features of the SS signal is that it contains a large number of very different signaling formats used for communicating data symbols. It means that the receiver which detects one of these formats cannot detect any other format within a single message. The number of formats used in an SS system is called the ***multiplicity factor*** (MF) of the communication link. Scholtz [20] classified SS techniques based on the modulation techniques used to generate the SS signals. Phase-shift-keyed pseudo-random sequences were employed in direct sequence (DS) systems in ordered to achieve spreading. For binary PSK data, antipodally modulated on this SS carrier, the multiplicity factor is given by [20],

Multiplicity factor = (data bit time) (chip time),

where chip time is the time spent in transmitting a single pulse of PN sequence. DS systems are efficient in power amplifier operation and have excellent TOA (Time of Arrival) resolution.

Frequency hopping (FH) systems drive a frequency synthesizer with a pseudo-random sequence of numbers spanning the range of the synthesizer in order to achieve spreading of the carrier. In the basic form of this technique, data is usually frequency-shift-keyed onto the spread carrier. With binary FSK modulation at one data bit per carrier hop, the multiplicity factor is,

Multiplicity factor = (hop time) (frequency range),

assuming the frequencies are used as efficiently as possible.

Time hopping (TH), spreads the carrier by randomly spacing narrow transmitted pulses. In this case, the multiplicity factor is a reciprocal of the average duty cycle,

Multiplicity factor = (average pulse spacing)/ (pulse width)

Time hopping can also be useful as a form of time multiplexing by allowing use of one antenna for transmitting and receiving. Details of DSSS, FHSS and hybrid DS/FH spread spectrum techniques, the main focus of this thesis, are described in Chapter 2.

1.7.2 Carrier Recovery in SS Communication Systems

There are three basic configurations used for recovery of the SS carrier [20]:

1. ***Transmitted reference (TR)*** systems perform detection by transmitting two versions of the carrier, one modulated by data and other unmodulated. These two signals enter a correlation detector which extracts the message.
2. In ***stored reference (SR)*** systems, both receiver and transmitter keep a 'copy' of the same pseudo-random signal. The receiver's carrier generator is adjusted automatically to synchronize its output with the arriving carrier. Detection is then similar to the TR system.
3. ***Matched filtering*** can also be used for reception of SS signals. Filter systems produce a wide-band, pseudo-random impulse response. A matched filter with such a response is used at the receiver in order to recover the transmitted signal. The pseudo-random characteristic of the impulse response ensures security of the transmitted signal.

1.8 Advantages of Spread Spectrum Systems

1. ***Low probability of intercept (LPI)*** can be achieved with high processing gain and unpredictable carrier signals when power is spread thinly and uniformly in the frequency domain, making detection against noise by the surveillance receiver difficult. Spread spectrum techniques introduce randomness (pseudo

randomness) in the transmitted signal waveform by using a code (pseudorandom pattern or code) that is known to the intended receiver but not to the jammer. As a result, a jammer must synthesize the interference signal without knowing the code. In a multiple-access system, a particular number of users may transmit information simultaneously over the common channel to corresponding receivers. Since a different code is designated for each user waveform, a particular receiver can recover the transmitted information intended for it by knowing the pseudorandom pattern. A low probability of position fix (LPPF) attribute goes one step further in including both intercept and direction finding (DFing) in its evaluation. Low probability of signal exploitation (LPSE) may include additional effects, e.g., source identification, in addition to intercept and direction finding.

2. ***Anti-jam (AJ)*** capability can be secured with an unpredictable carrier signal. The jammer cannot use signal observations to improve its performance in this case, and must rely on jamming techniques which are independent of the signal to be jammed.
3. ***High time resolution*** is attained by the correlation detection of wide-band signals. Differences in the time of arrival (TOA) of the wide-band signal, on the order of the reciprocal of the signal bandwidth, are detectable. This property can be used to suppress multipath signals and also to render repeater jamming ineffective.
4. Transmitter-receiver pairs using independent random carriers can operate in the same bandwidth with ***minimal co-channel interference***.
5. ***Cryptographic capabilities***: Message privacy is obtained by superimposing a pseudorandom pattern on a transmitted message. The message can be detected or demodulated only by intended receivers that know the pseudorandom pattern used at the transmitter. Spectrum Spreading complicates the signal detection problem for a surveillance receiver in two ways: (1) a larger frequency band must be monitored, and (2) the power density of the signal to be detected is lowered in the spectrum spreading process. Thus message privacy is maintained in the presence of other listeners.

6. ***Multipath suppression:*** Small scale fading of the radio signal is caused by the interference between two or more versions of the transmitted signal which arrive at the receiver at slightly different times. These waves, called ***multipath waves***, combine at the receiver antenna to form a resultant signal which varies widely in amplitude and phase. Multipath interference may also be suppressed by using a pseudorandom pattern in the transmitted signal (Proakis [17]).

1.9 Some Disadvantages of SS Communication Techniques

The biggest demerit of using a spread spectrum technique is the complex circuitry involved in generation and reception of spread signal waveforms. This results in increased cost of operation and maintenance. Spectrum spreading involves using a larger bandwidth than that required to transmit the information. Thus the technique is inherently bandwidth inefficient. But these disadvantages might be very nominal considering the unique advantages that spectrum spreading provides under certain conditions. All spread spectrum modulation techniques have their own unique advantages and disadvantages under certain operating conditions. Merits and demerits of individual techniques are analyzed in detail in Chapter 2.

1.10 Need for Hybrid Spread Spectrum Systems

Both DSSS and FHSS techniques are used in present wireless communication systems and each has its own set of advantages and disadvantages under different scenarios. Hybrid DS/FH systems are attractive because they combine the best features of pure direct sequence (DS) and pure frequency hopped(FH) SS modulation schemes, while

avoiding many of their individual shortcomings. A number of comparative studies have been done by various research groups regarding the superiority of one modulation scheme over others for certain conditions. The two spread spectrum approaches can be considered duals in several ways. For example, FHSS is found to be more suitable for indoor wireless applications, while DSSS performs better in outdoor applications. If the interference is within the spreading band, then the DSSS system can tolerate and completely reject it while the FHSS system can be completely jammed on that channel. As cited above, differences between DSSS and FHSS and the promise of getting the best of these two in hybrid DS/FH, provides motivation to explore hybrid systems in greater detail. Also, due to an increasing demand for ubiquitous compatibility, there is a need to compare different spread spectrum techniques in order to identify the conditions when one technique outperforms another.

Neither DS nor FH alone can provide a robust communication system capable of operating under various types of interference. Some other reasons to go for hybrid DS/FH systems are to extend the spectrum spreading capability and to enhance the multiple access capability. When the PN sequence generator clock has reached its maximum or a limit in the number of frequency hop channels has been reached, a hybrid modulator can be especially useful. The advantage in combining two spread spectrum modulation methods is that characteristics can be provided which are not available from a single modulation method.

Another argument for hybrid spread spectrum techniques can be made by analyzing the nature of wireless communication links. Since the quality of a wireless communication link is changing all the time depending on a particular location (indoor or outdoor) along with RF propagation effects i.e. shadowing, scattering, multi-path etc.), relying on a single modulation scheme all the time may not be the best option in today's world, where the reliability of a wireless link is of prime importance. If a scheme or algorithm (like equalization) can be devised that is able to operate on some input factors to decide in favor of a particular SS modulation scheme under given conditions, then reliability of the

wireless link can be secured by switching to that favorable SS scheme. THE SCOPE OF THIS THESIS WILL BE CONFINED TO THE ANALYSIS AND COMPARISON OF HYBRID DS/FH SYSTEM WITH OTHER SPREAD SPECTRUM TECHNIQUES.

1.11 Analytical Approach

It is very important to first understand and analyze all the spread spectrum techniques individually before drawing comparisons among them. Our methodology for this work follows a ***"bottom-up approach"*** going from a lower complexity level to a higher one. Schematic representation of the analytical approach is shown in Figure 1.2

LEVEL 1: Preliminary simulations

The first and simplest level would involve simulation of three spreading schemes; DSSS, FHSS (SFH and FFH) and hybrid DS/FH separately to understand the implementation details clearly. At this stage, effects of multiple access interference and Rayleigh fading are not studied. Here only baseline performance is established under the AWGN environment, and an *equal bandwidth constraint* is followed. No conclusions can be drawn at this stage, since spread spectrum technologies occupying the ISM band are meant to be operated in the presence of other interfering signals occupying the band. Thus, an important criterion for comparison would be how effective the technologies are in rejecting interference.

LEVEL 2: Interference rejection capability

This stage would involve simulation of three systems under the effects of multiple-access interference. Performance results would be obtained as BER curves that will show how the three systems respond to a multi-user environment and how sensitive the BER is to an increase in the number of users. Results from this stage would be beneficial in

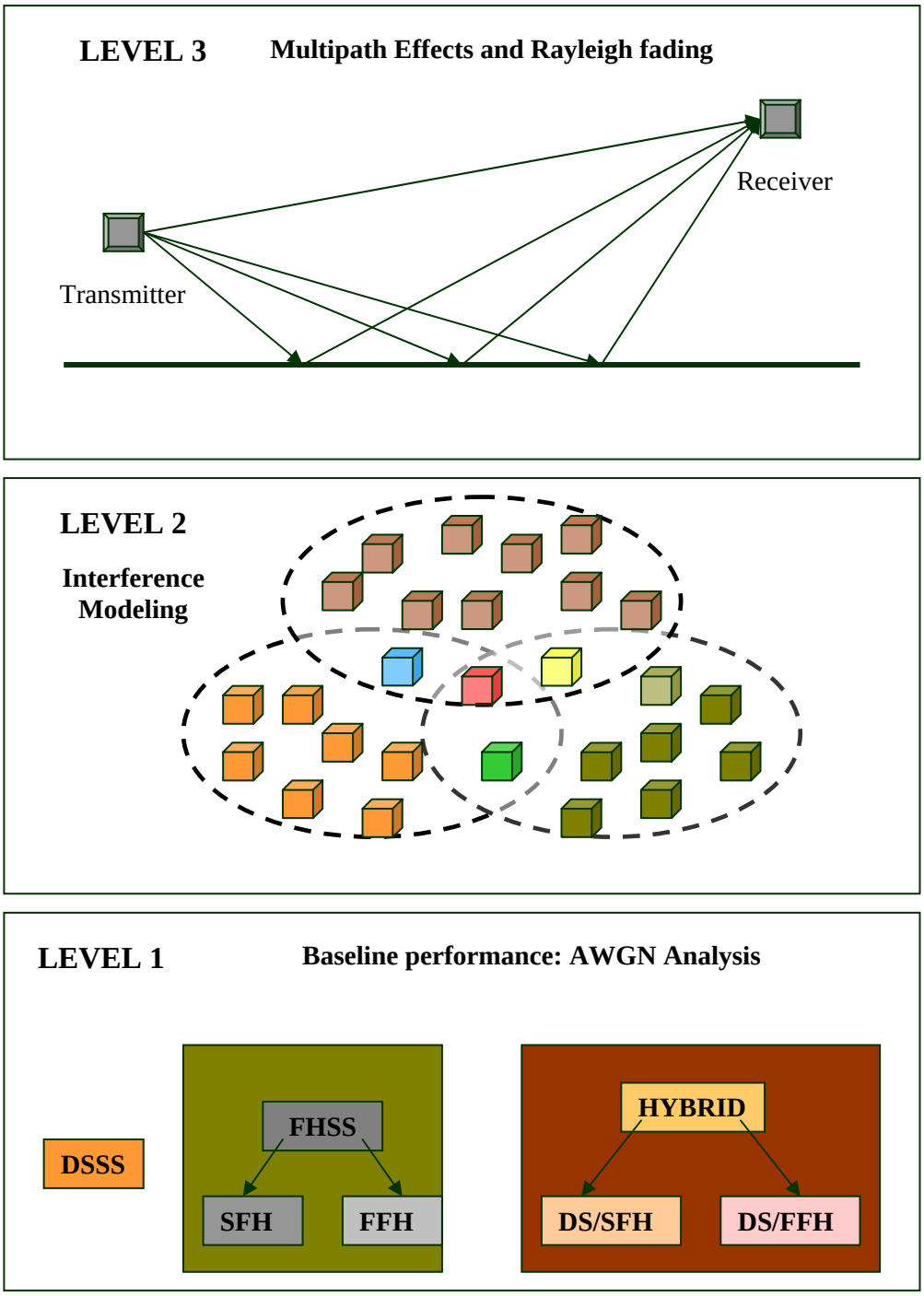

Figure 1.2 : Analytical Approach

identifying the spread spectrum scheme that is most capable in combating multi-user interference.

LEVEL 3:Multi-path and Rayleigh fading effects

The next higher level would involve introduction of Rayleigh fading effects in the multi-user system of the second stage. A common Rayleigh fading simulator would be used for the three spread spectrum schemes. This is required to obtain consistent comparative results. Overall Analysis would involve drawing comparative results from the three stages above.

1.12 Organization of the Thesis

As discussed above, the main purpose of this thesis is to analyze the advantages of hybrid spread spectrum systems over DS and FH systems. In order to carry out such an analysis, it is very important to understand the basic implementation details of these three systems. Chapter 2 describes the DSSS, FHSS and hybrid DS/FH systems in detail along with a comparative analysis of DS and FH systems. Previous research done on hybrid DS/FH systems is summarized in Chapter 3. Chapter 4 incorporates system modeling for simulation purposes. All assumptions and the concepts used in simulation of DSSS, FHSS and hybrid DS/FH are discussed. Results are presented in Chapter 5. The thesis concludes with a short summary and related future work in Chapter 6.

Chapter 2

Spread Spectrum Systems

Spread spectrum systems are an elegant means of communication due to their inherent transmission security, resistance to interference from other radio sources and resistance to multipath and fading effects. As a result, spread spectrum systems can coexist with other radio systems, without being disturbed by their presence, and without disturbing their activity. They may therefore be operated without the need for a license. However, all spread spectrum techniques are not suitable for all environments. Thus, it is very important to understand the basic principles underlying these systems in order to harness their advantages to improve communication links. The fundamentals of spread spectrum communication systems will also set a stage to understand and appreciate the differences and similarities among various techniques. This chapter is devoted to a basic description of DSSS, FHSS and Hybrid DS/FH systems. Different modes of spectrum spreading with their associated processing gains and special advantages under certain conditions are

analyzed. Besides a thorough discussion of SS systems, a comparative analysis of DSSS and FHSS systems is carried out focusing on the ability of these techniques to combat the deleterious effects of the propagation environment. A typical situation occurs when Hybrid DS/FH are used for salvation of a jeopardized DSSS or FHSS link. It is argued that under certain conditions, despite the complexity involved in generating a hybrid signal, it can be envisioned as a better performer than DSSS or FHSS.

2.1 Direct Sequence Spread Spectrum

Direct sequence spread spectrum systems are the best known and most widely used. This is due to their inherently simple design, which does not require a high speed, fast response *frequency synthesizer***.** Design of a DSSS transmitter is relatively simple. The main entity is the PN sequence generator which may have the capability of generating several types of spreading codes. DSSS modulation is carried out by multiplying data bits directly with the PN sequence, thus justifying the name "direct sequence spread spectrum". The spread bits are then modulated by a high frequency carrier before transmission. Pulse shaping and error correction coding may also be part of the transmitter system to obtain enhanced performance characteristics. A schematic diagram of single user BPSK DSSS transmitter-receiver pair is shown in Figure 2.1(a). In order to elucidate the mechanism of DSSS modulation, various transmitter waveforms are also shown in time and frequency domains in Figure 2.1(b). In the transmitter, the binary data $d(t)$ is directly multiplied with the PN code $c(t)$ which is independent of the binary data to produce the transmitted baseband signal $Tx_b(t)$. The effect of multiplication of $d(t)$ with a PN sequence is to spread the baseband bandwidth R_s of $d(t)$ to a baseband bandwidth of R_c. A DSSS receiver is simplest among spread spectrum receivers. The received RF signal is first down-converted to base band and a ***despreading*** operation is carried out by multiplying baseband data $Rx_b(t)$ with the same PN sequence $c(t)$ used

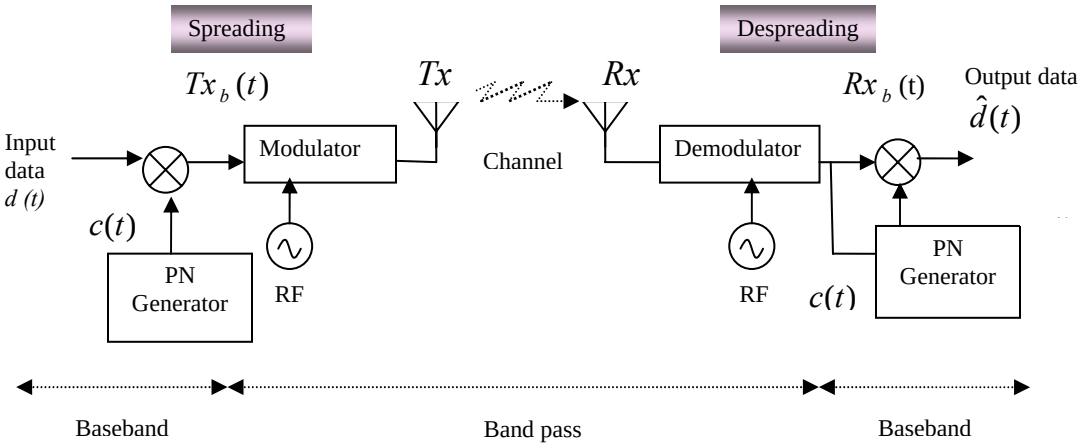

(a)

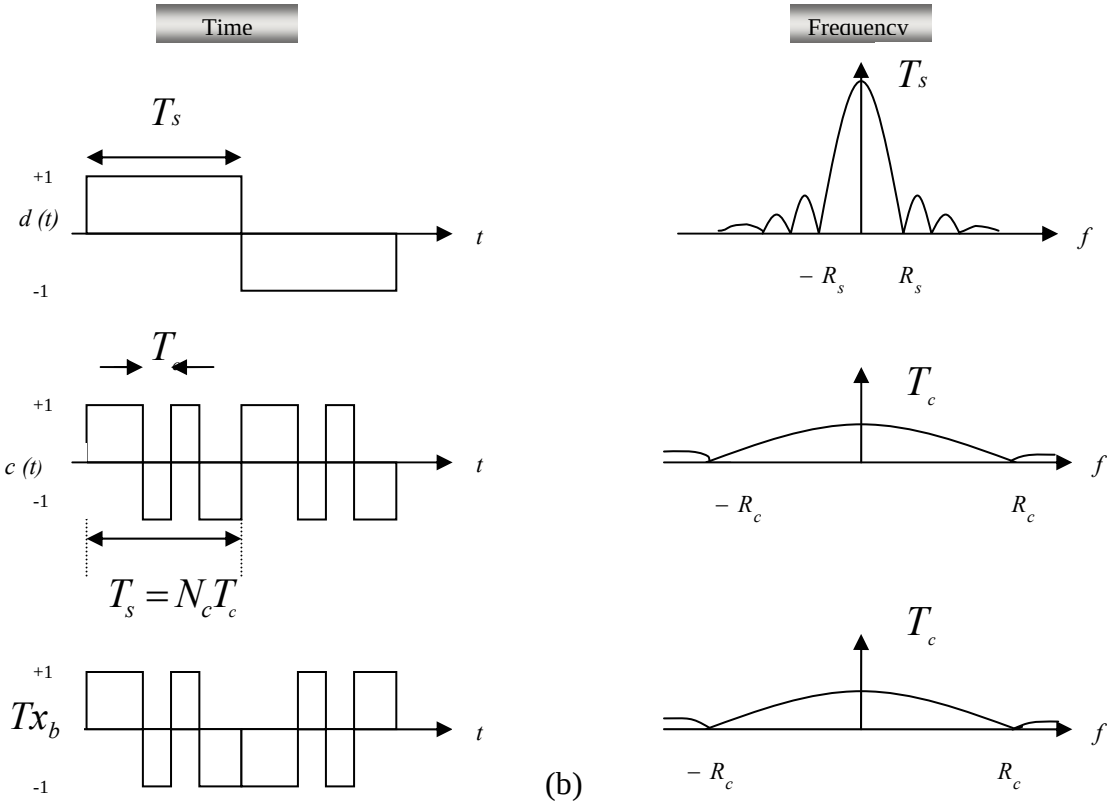

(b)

Figure 2.1 : (a) Schematic Representation of DSSS BPSK Transmitter Receiver (b) Time and Frequency Domain Signals at Transmitter

for spreading at transmitter. This operation is called despreading since the effect is to undo the spreading operation. This reference PN is either stored at the transmitter (stored reference) or transmitted along with the data (transmitted reference). Transmission of a DSSS signal results in LPI, while its reception at receiver results in interference rejection.

When the signal is despread by multiplying with the PN sequence, it reverts to its original level, well above noise, while the interference is spread and no longer obscures signal reception. Thus a DSSS signal is hidden in noise during transmission and is more prominent than any other signal during reception due to despreading operation. If the PN sequence at the receiver is not synchronized properly to the received signal, the data cannot be recovered. The spread signal is a little like white noise in nature. The amplitude and thus the total power in the spread signal $Tx_b(t)$ remains the same as in the original signal *d (t)*, however, due to increased bandwidth, the power spectral density must be lower.

In a multi-user environment, detection of the desired user is achieved by correlation against a locally generated reference PN sequence. Communication security is embedded in the uniqueness of PN sequences. A receiver not knowing the PN sequence of the transmitter cannot reproduce the transmitted data. The unique properties of pseudo noise sequences directly dictate the performance of this system. Much research has been done to identify codes with some unique properties that can be successfully used for spreading the signal in a way that results in a robust signal which, in spite of its low power level, is capable of suppressing multiple access interference. Understanding these unique features of spreading codes is essential for understanding the DSSS system as a whole.

2.1.1 Spreading Codes

The common type of spreading code is the pseudo noise (PN) code. The spreading codes are "*pseudo* "or falsely random, since a true random sequence cannot be predicted, while

PN sequences are known to both transmitter and receiver. The word "*noise*" suggests these codes mimic some properties of noise signals. The common form of the noise is Additive White Gaussian Noise (AWGN).

In order to understand the pseudo noise characteristic of PN codes, it is important to understand both the aspects in which it resembles and differs from AWGN. AWGN is characterized by its uniform PSD (Power spectral density) over all frequencies and delta correlated autocorrelation function given by $R_{AWGN}(\tau) = \frac{N_o}{2}\delta(\tau)$ where N_o is the noise PSD and τ is the time delay. Thus the autocorrelation function is zero for $\tau \neq 0$ and any two samples in time are uncorrelated. PN codes are similar to noise in their correlation properties but differ in that they are not truly random, while noise is random in nature.

Ideally, PN sequences should have zero cross-correlation and thus multiple users can be allowed in the same bandwidth without interfering with each other. Achieving this ideal situation is impossible to realize in practice, and thus codes with low cross-correlation properties are sought after. PN codes are designed to minimize auto-correlation for non zero time shifts, and cross correlation over all shifts. The interference rejection capability of a DSSS system is directly determined by the degree to which PN codes conform to these optimal design goals. Randomly generated codes, though not ideal, do exhibit good auto-correlation and cross-correlation properties.

Besides correlation characteristics, PN codes are required to fulfill the *balance property* and *run length distribution.* The balance property implies that in each period of the sequence, the number of binary ones differ from the binary zeros by at most one digit. A run is defined as a continuum of a single type of binary digit. For PN sequences, a run length distribution is desired such that about half the runs of each type are of length 1,

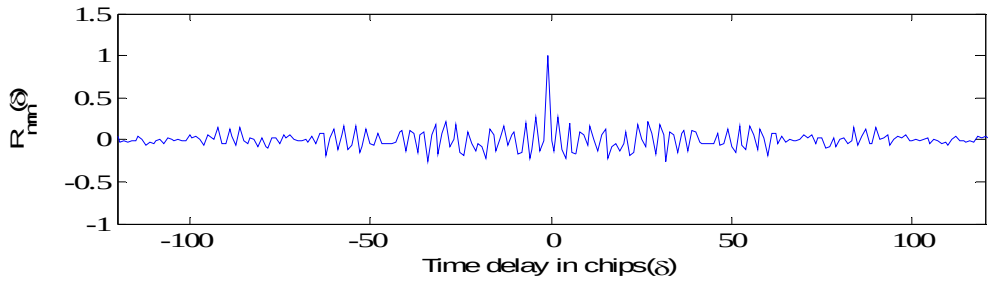

(a)

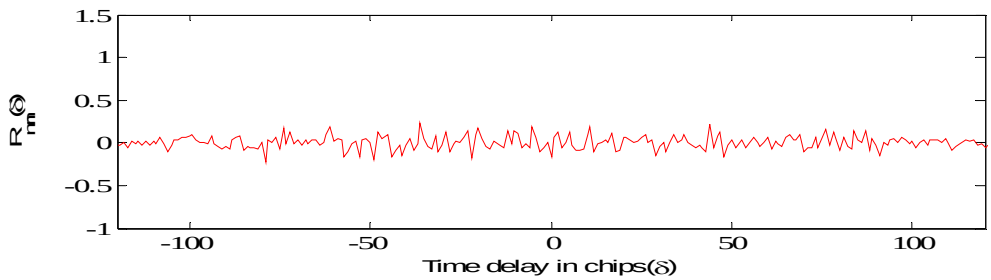

(b)

Figure 2.2: (a) Autocorrelation for Random PN Code with SF=128 (b) Cross correlation for Random PN Code with SF=128

about one-fourth are of length 2, one-eighth are of length 3, and so on. Auto-correlation and cross-correlation functions of randomly generated codes of length N = 128 are shown in Fig 2.2 (a) and (b) respectively. *Maximal Length Sequences* or *m-sequences* are a class of PN codes obtained from shift registers. A PN sequence generator based on shift register consists of three basic components: 1) An N stage shift register; 2) A mod-2 adder; and 3) A connection vector between the shift register stages and the mod-2 adder, as shown in Figure 2.3. The connection vector establishes the performance characteristics of the generator. If g_i =1, a connection exists between the ith stage of the shift register and the mod-2 adder. The maximum period of the output PN sequence is given by $L = 2^N - 1$. For example, if N =6, then the output PN sequence will have a length of 63 chips. This maximal length PN sequence is obtained only if the generator

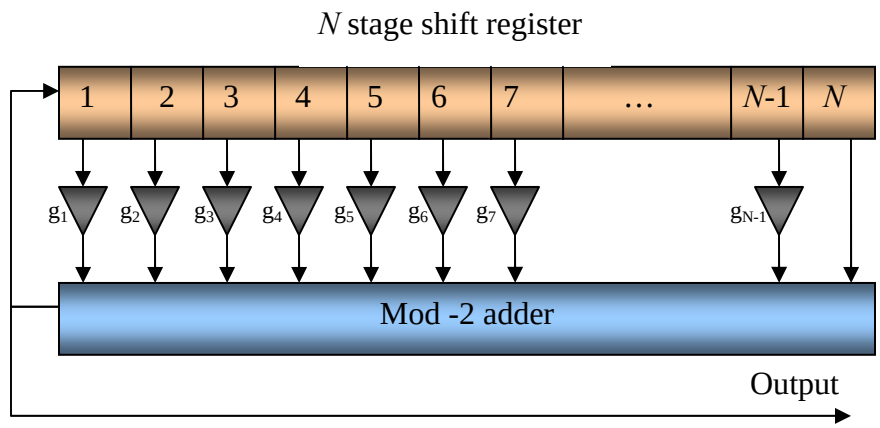

Figure 2.3 : PN Sequence Generator

polynomial $g(D) = 1 + g_1 D + g_2 D^2 + ... g_{N-1} D^{N-1} + D^N$ is *primitive* [48]. For DSSS systems, the factor by which a data bit is spread is commonly referred to as the *spreading factor (SF).* For example, a spreading factor of 64 implies that a $N = \log_2(64) = 6$ stage shift register has been used to generate the PN spreading codes.

2.1.2 Processing Gain and Interference Rejection in DSSS Systems

The most common modulation technique used for DSSS is the BPSK modulation. The DSSS signal results when a BPSK signal is modulated by a PN code sequence. This specialized modulation enhances the otherwise conventional BPSK modulated data with the so called *Processing Gain (PG).* The processing gain of a DSSS system is a measure of spectrum spreading that results due to direct sequence modulation, and is a function of RF bandwidth of the signal transmitted compared with the bit rate of the information [16].

This processing gain is demonstrated as a signal-to-noise improvement resulting from the RF-to-information bandwidth tradeoff. Assuming no pulse shaping, the transmitted bits

are rectangular in shape, the spectral characteristics of the spread waveform can be easily understood. When a rectangular data pulse is modulated with high rate PN sequence chips (usually 63 PN chips/data bit), the effective pulse width decreases by a factor proportional to the length of the PN sequence (and a narrower pulse implies a wider spectrum) but the data rate (number of actual information bits transmitted) remains the same. Thus, DSSS spreads the data spectrum much more than is required for its transmission.

The spectral characteristics of a rectangular data bit before and after spreading are shown schematically in Figure 2.4. There are many consequences of this spreading phenomenon that are desirable for improvement of wireless communication links. First, as shown in Figure 2.4(a), the spreading operation reduces effective power to the extent that the signal level remains below the AWGN noise level. This ability to remain buried in noise provides LPI and cryptographic capabilities. At the receiver, any other user's signal or other interference is spread and thus its level is reduced below the noise. At the same time, the desired signal is de-spread and its level is much higher than the noise or other interfering signals. It can be easily detected as shown in Figure 2.4(b). Thus, many users can be supported in the same bandwidth as long as they use different PN codes for their transmission, providing multiple access capability.

The very nature of the DSSS signal is exploited to resolve *multipath* in wireless links. Besides providing LPI and interference rejection capability, the correlation properties of PN codes allow DSSS receivers to use the otherwise deleterious multipath signals to their own advantage by using a RAKE receiver. RAKE receivers combine the time delayed versions of the original signal in order to improve the signal-to-noise ratio at the receiver. It provides a separate correlation receiver for each of the multipath signals. Thus a RAKE receiver is a diversity receiver in which diversity is provided by the uncorrelated multipath components. A M -branch RAKE receiver is shown in Figure 2.5. Each correlator detects a time shifted version of the originally transmitted signal, and each

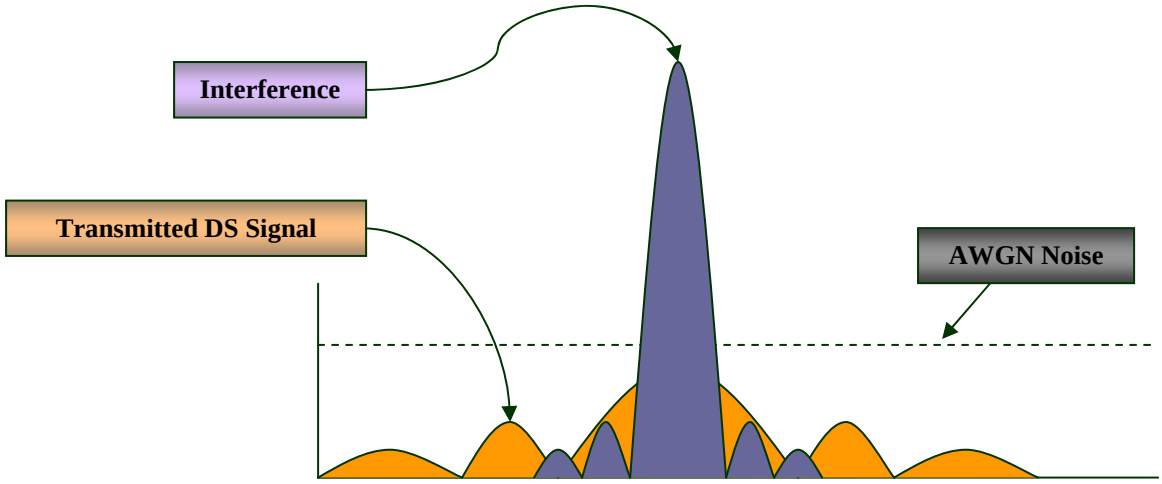

(a)

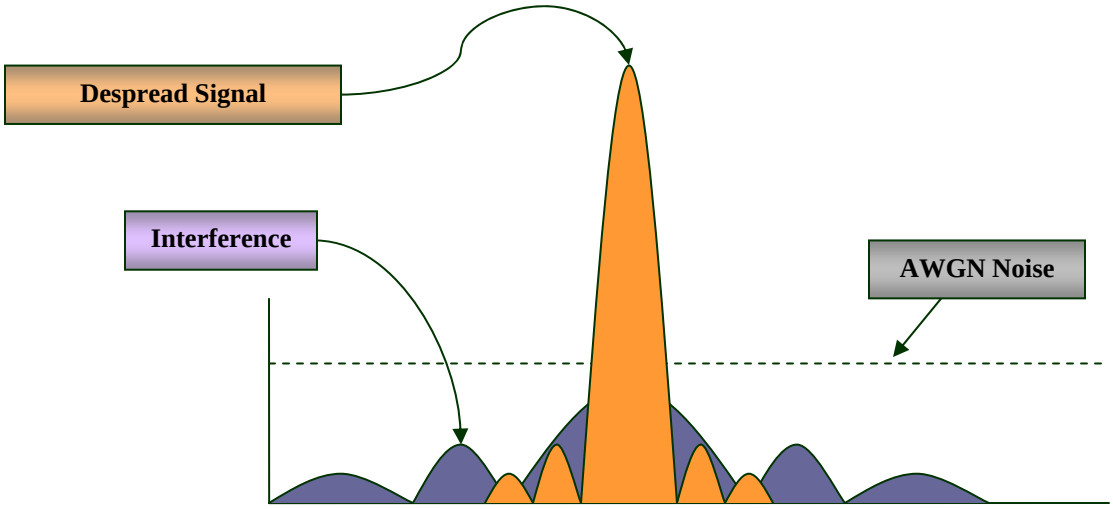

(b)

Figure 2.4 : (a) Schematic Representation of Transmitted Signal and Interference Power Levels. (b) Schematic Representation of Received Signal and Interference Power Levels

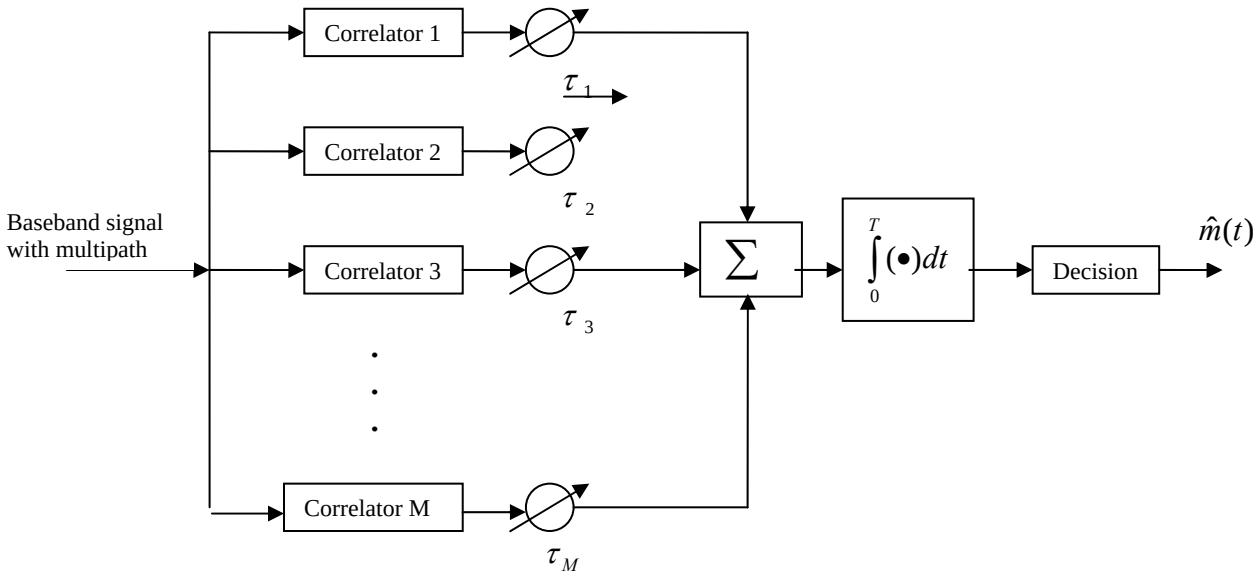

Figure 2.5 : RAKE Receiver Implementation with M Correlators

finger of the RAKE correlates to a portion of the signal that is delayed by at least one chip in time from other correlators.

2.2 Frequency Hopping Spread Spectrum

As is obvious by its name, a FHSS system spreads the information signal over a wide band by hopping its carrier. Frequency hopping modulation is not as simple as DS modulation. It consists of a complex frequency hopper that consists of a code generator and a frequency synthesizer. A schematic representation of a FHSS transmitter-receiver system is shown in Figure 2.6. Frequency hopping systems are similar to DSSS systems in that both use pseudorandom codes and the overall bandwidth for transmission is much larger than the information bandwidth. But unlike DSSS systems, frequency hoppers use the PN code as an address to a frequency synthesizer that outputs pseudo randomly distributed frequencies. The frequency hopping approach can be viewed as a collection

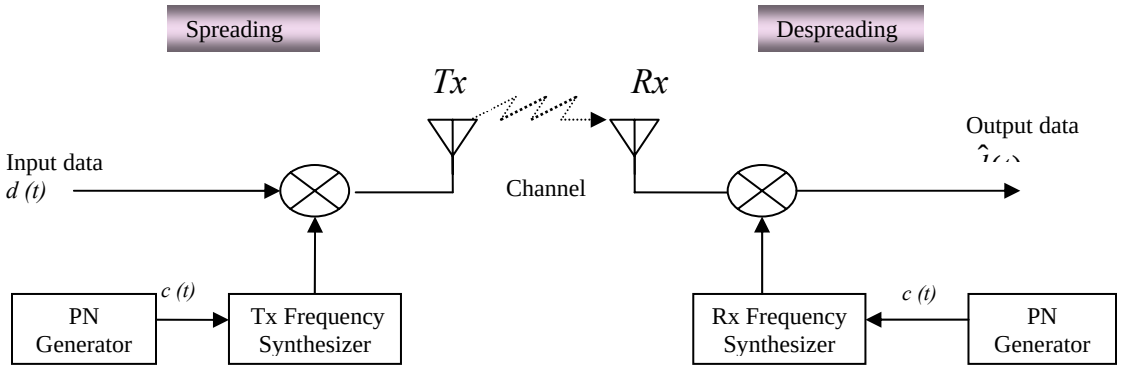

Figure 2.6 : Schematic Representation of FHSS BPSK Transmitter Receiver

of conventional narrowband signals transmitted one at a time. The spreading factor for a FHSS system corresponds to the number of frequencies used in the hopping sequence. For DSSS systems, the term *"chip"* refers to the symbol of shortest duration. Similarly, in frequency hopping systems the shortest uninterrupted waveform or frequency is referred to as a chip. The duration for which this frequency lasts is referred to as the *"dwell time"*. Slow frequency hopping (SFH) systems have dwell times that last for more than a symbol period. For example, a system with a hopping rate of 2 symbols per hop is a slow frequency hopping system. On the other hand, if frequency hops more than once within a symbol period, then such systems are called fast frequency hopping (FFH) systems. The concepts of slow and fast frequency hopping with corresponding dwell intervals are depicted in Figure 2.7. Early versions of frequency hopping systems were mostly slow hoppers, since fast settling frequency synthesizers were not available with contemporary hardware. However, today's more powerful hardware makes possible the realization of fast frequency hopping systems.

The present work is an attempt to identify key advantages of fast frequency hopping systems over slow frequency hopping systems. An advantage of fast frequency hopping

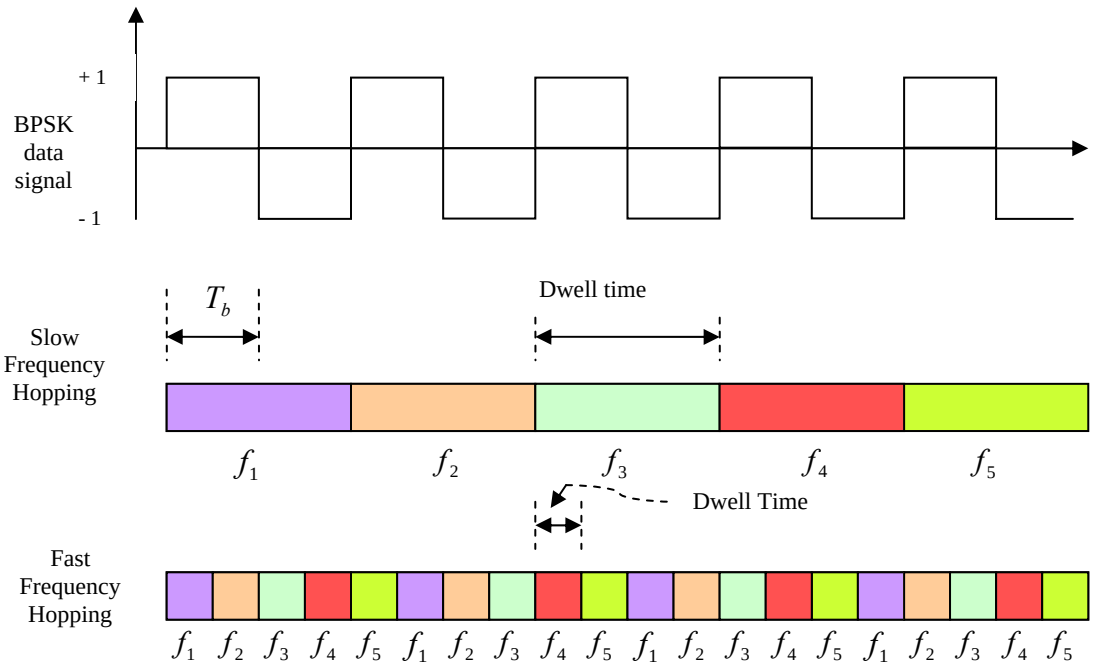

Figure 2.7 : Concept of Slow and Fast Frequency Hopping

that is clearly evident without analysis is its "inherent frequency diversity". Different portions of a data symbol or bit (in BPSK modulated systems) are transmitted over different frequencies in FFH systems. Slow frequency hopped systems don't exhibit this inherent diversity. Frequency diversity is especially desirable in frequency selective fading channels with varying channel gain for different frequencies. For instance, if the frequency f1 in Figure 2.7 undergoes severe fading, then two complete symbols are lost if slow frequency hopping is used. On the other hand, only half of a symbol is lost in fast frequency hopping, and complete information can still be recovered from the second frequency f2, which may not have the same channel gain as f1. Fast frequency hopping seems to be more desirable than slow but this doesn't imply that slow frequency hoppers are without merit. A slow frequency hopping system may be preferred over DSSS systems just to avoid interference, without the complexity of fast frequency hopping. As with the spreading codes of DSSS systems, considerable research has been done to

develop frequency hopping patterns that result in minimal multi-user interference. A sample of a randomly generated frequency hopped BPSK signal is shown in Figure 2.8.

2.2.1 Processing Gain in FHSS Systems

The processing gain for spread spectrum systems has been defined as the ratio of chip rate to symbol rate, or spread bandwidth to data bandwidth. For FHSS systems, spread bandwidth is equal to the frequency band over which the system may hop. Sklar [18] defines the processing gain of a frequency hopping system as W_{ss} / R where W_{ss} is the hopping bandwidth and R is data rate. In a DSSS system, interference just appears as noise at the receiver, but for FHSS systems, the interference acts as a jamming signal when its frequency matches the desired signal. A ***"hit"*** in the FHSS system is said to occur when communication at a particular hop frequency is blocked by interference transmitted in the same band, and during the same time slot. Interference in FHSS systems with the occurrence of hits is depicted in Figure 2.9. The mechanism of multi user interference rejection in a FHSS system is entirely different from that of direct sequence systems. The FH system applies all of its output power at whatever frequency it is operating at during a particular hop, while the power of a DSSS signal is distributed over the spread band. Thus, a FHSS signal doesn't have LPI capability and it avoids interference by hopping from one frequency to another instead of suppressing it. Therefore, the interference rejection capability of FHSS systems depends on how frequently hits occur. Substantial research has been done to design frequency hopping patterns that result in a minimum number of hits. A brief overview of frequency hopping sequences is presented below.

2.2.2 Frequency Hopping Sequences

An important requirement of the family of frequency hop sequences is their *orthogonality*. In an asynchronous system this requirement implies that the cross

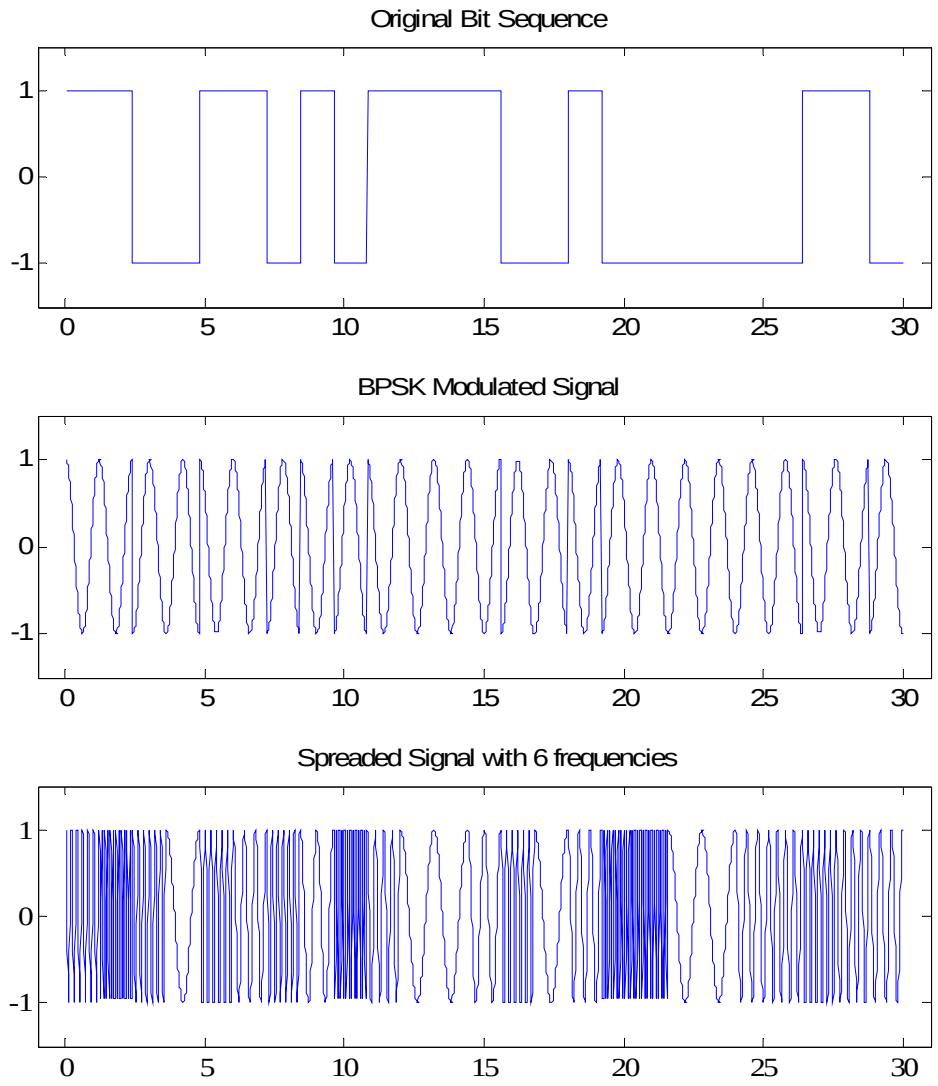

Figure 2.8 : Randomly Hopped BPSK Signal

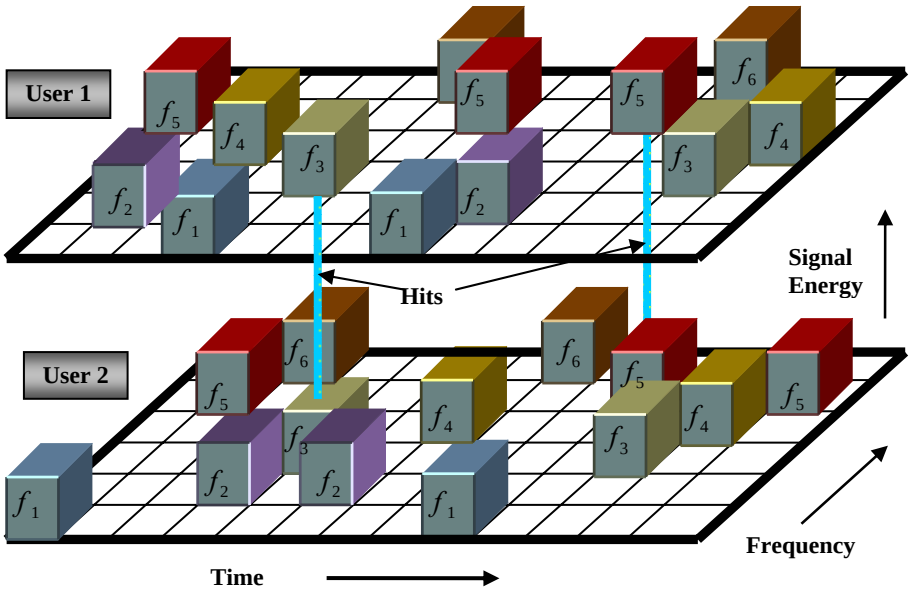

Figure 2.9 : Interference in FHSS Systems

correlation functions of the sequences must be minimized for every possible time shift. Hopping patterns should be allocated to users in a way that if two terminals transmit at the same time, then they rarely transmit at the same frequency. Alternatively, if two users are allowed to transmit at the same frequency, then they should rarely transmit at the same time. Moreover, for fading channels, it is necessary for different hops to fade as much independently as possible [49]. All these requirements make the design of effective hopping patterns more complicated than the design of spreading codes in DSSS systems. The design of various frequency hopping patterns and the performance improvement associated with them can be found in [49-55]. A method to predict the performance of a given set of frequency hop waveforms directly from the associated set of frequency hopping patterns has been discussed in [55]. A random frequency hopping pattern is a sequence of independent random variables, each of which is uniformly distributed over a set of N_f frequencies. Hence, different users utilize statistically

independent hopping patterns. If different users employ the same number of hopping frequencies N_f, then the probability of hits among any two users will depend entirely on the correlation properties of their hopping sequences. On the other hand, if the interference consists only of a subset of frequencies used by the desired signal, then the spread bandwidth of the interference is lower than the desired signal and fewer hits occur.

2.3 Hybrid Spread Spectrum Systems

The advantage in combining two spread spectrum modulation methods is that characteristics can be provided that are not available from a single modulation method. Based on the hopping rate, a hybrid DS/FH system may be classified into hybrid DS/SFH and hybrid DS/FFH systems. Though the modulation complexity has substantially increased in hybrid systems, implementation may not be more difficult than pure DSSS or FHSS systems since a hybrid system can use shorter PN codes and fewer of hopping frequencies. Hybrid DS/FH transmitters are a simple combination of DSSS and FHSS transmitters as shown below. The same PN code generator can be used to provide both the spreading sequence and addressing to a frequency synthesizer as shown in Figure 2.10.

While DSSS and FHSS systems distinguish users by their unique code sequences or hopping patterns, a hybrid user is identified by an address composed of two fields: its PN sequence and hopping pattern. Synchronization between FH and DS code patterns is required. Earlier hybrid systems usually employed DS codes that were much faster than the rate of frequency hopping. For example, a single frequency hop would last for several chips. This should not be confused with slow frequency hopping which has several symbols in one hop.

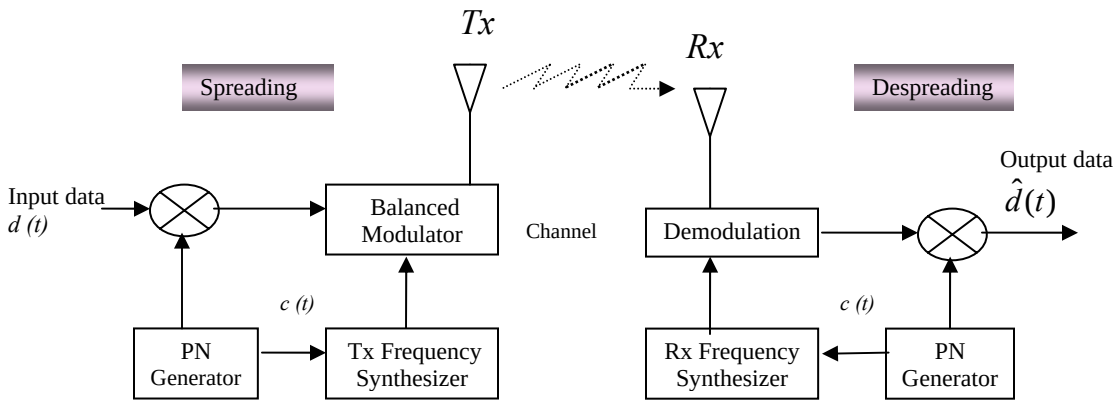

Figure 2.10 : Schematic Representation of Hybrid DS/FH Transmitter Receiver

A hybrid system with several chips/hop may be slow or fast hopping depending on the number of symbols transmitted per hop. These concepts are best explained diagrammatically as shown in Figure 2.11. It is quite clear from the diagram that a hybrid system can be realized by various combinations of frequencies and codes depending upon the resources available and communication performance requirements. This flexible nature of hybrid DS/FH systems can be exploited in numerous ways to reduce the effect of multi-user interference and frequency selective fading. For instance, two different hybrid DS/FH systems using same set of PN codes can coexist without interfering with each other if both have a different set of frequencies. Alternatively, they can coexist with the same set of frequencies but with different PN codes.

2.3.1 Processing Gain and Interference Rejection in Hybrid DS/FH Systems

Processing gain for a hybrid DS/FH system is a combination of that provided by pure frequency hopping, and DS modulation [16]. It is important to note that a hybrid system is theoretically more robust than a pure DS or FH system when it comes to interference

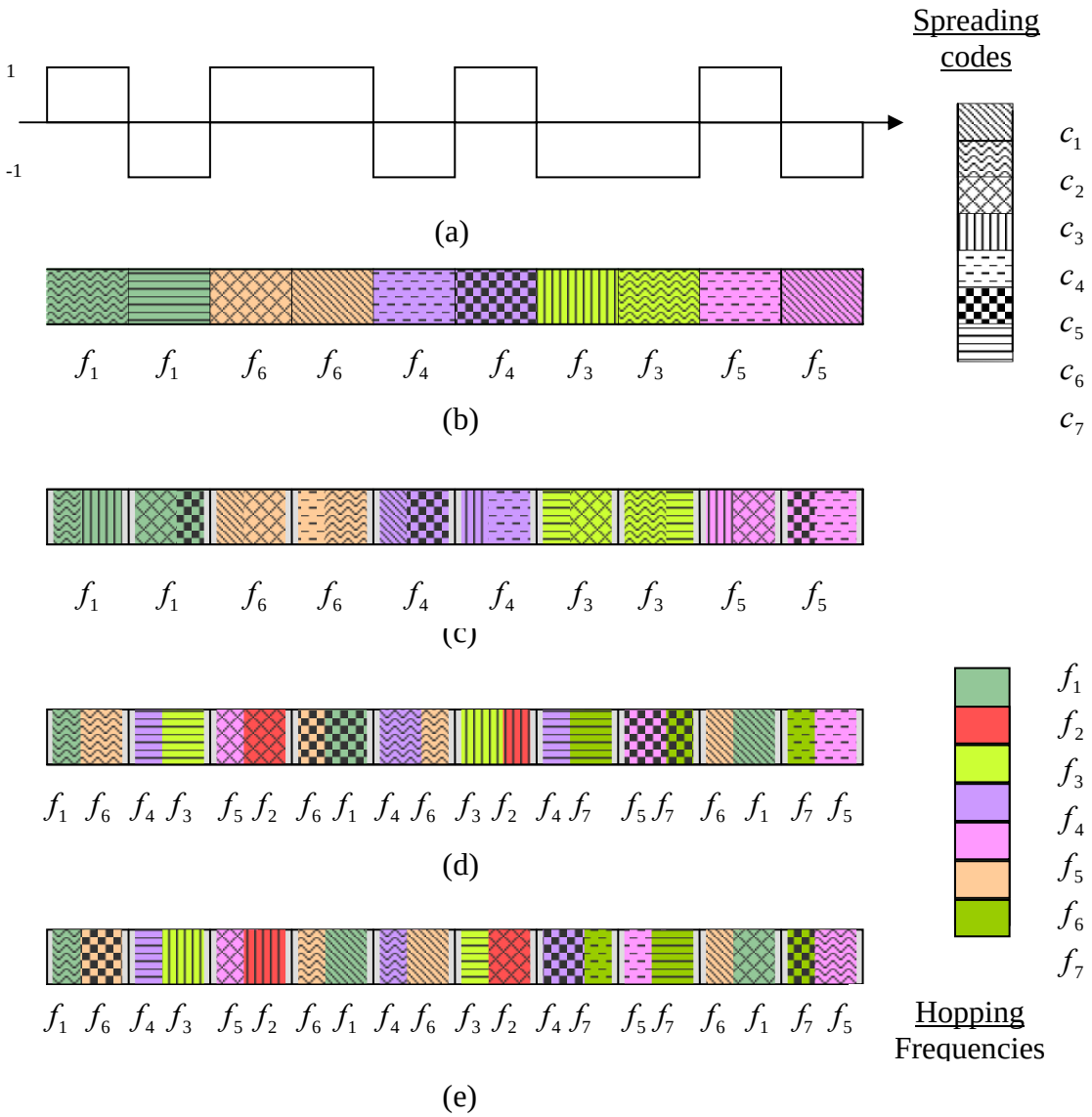

Figure 2.11 : Concept of Hybrid Slow and Fast Hopping: (a) BPSK data signal (b) Hybrid DS/SFH with 2 bits/hop and one code sequence per symbol (c) Hybrid DS/SFH with 2 bits/hop and two code sequences per symbol (d) Hybrid DS/FFH with 2 hops/bit and one code sequence per symbol (e) Hybrid DS/FFH with 2 hops/bit and two code sequences per symbol.

rejection. The DS component of a hybrid signal provides LPI characteristics and helps to *suppress* the interference, and at the same time the signal is hopping from one frequency to another and the FH part is at work to *avoid* interference. In a hybrid DS/FH system, a saboteur must know both the hopping sequence and the code used by the signal to accurately jam it. Hence, the probability of a saboteur to block or degrade the desired signal is reduced. A schematic representation of a hybrid DS/FFH signal in frequency domain is shown in Figure 2.12. The spreading factor for a hybrid DS/FH system is a function of the number of chips per bit, and the hopping frequencies used in the system. In the present thesis, the spreading factor for hybrid systems will be defined by the term ***"total spreading factor"*** (TSF) which is equal to the product of the DS spreading factor (SF) and N_f, the number of hopping frequencies used. For example, a TSF of 64 might imply that eight hopping frequencies and a code sequence with SF 8 have been used to generate the hybrid signal. Another combination that will provide a TSF of 64 can be of 4 hopping frequencies and a code with SF equal to 16 and so on. Several of these combinations will be analyzed in this work for both hybrid slow and fast hopping systems.

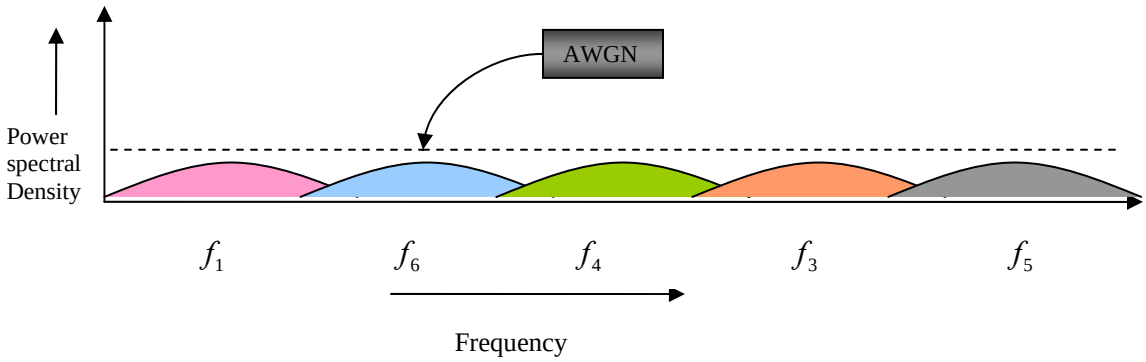

Figure 2.12 : Frequency Spectrum of Hybrid DS/FH System

2.4 Summary and Comparison

Based on the discussion above, it can be inferred that hybrid DS/FH systems may be preferred for many wireless communication links. Both direct sequence and frequency hopping systems have characteristic advantages and disadvantages. A DSSS signal is more secure and difficult to detect, but can be jammed if detected. On the other hand, a frequency hopping signal can be easily intercepted but cannot be jammed permanently due to the hopping carrier. Fast frequency hopping provides inherent frequency diversity not available in DS and slow hopping systems. Hybrid systems combine the unique advantages of both DS and FH systems. There is a need to further explore the hybrid fast hopping technique since it promises a secure and robust wireless communication link by incorporating all the advantages of DS and FH along with frequency diversity. A comprehensive literature review of research done on hybrid DS/FH systems is presented in Chapter 3 with an attempt to identify the areas that need exploration.

Chapter 3

Literature Review

As discussed in the previous two chapters, hybrid spread spectrum (HSS) systems promise better performance in certain conditions than DSSS or FHSS. Before we proceed to evaluate their performance, it is important to review previous research done in this area. Spread spectrum systems have been the topic of research since the 1960's and many research papers have contributed to the concept as we know it today. An attempt is made to identify those aspects of hybrid DS/FH systems that need to be addressed. Many research papers on hybrid spread spectrum systems were published in the 1970's and early 1980's. The pace of research increased after 1993 when the FCC granted unlicensed use of the 2.4 GHz ISM band. A brief discussion of this research, spanning more than two decades, is presented below.

3.1 Hybrid Spread Spectrum - Conclusions from Literature

Many papers were published on spread spectrum systems in the early 1980's by Pursley and Geraniotis ([32]-[35]). An important work on coherent hybrid systems was published by M. K. Simon and Andreas Polydoros [37]. Their work investigated the performance of coherent FH and hybrid DS/FH systems with QPSK and QASK modulations. They derived expressions for error probability under partial band noise jamming and partial band multitone jamming. An important consequence of using hybrid spread spectrum was the conversion of a FH multitone jammer to an equivalent AWGN jammer (under certain assumptions); due to spectrum spreading associated with the DS modulation part of hybrid DS/FH systems. In other words, the effect of a spread multitone jammer on bit error probability was found to be equivalent to the effect of AWGN interference.

The performance of ***coherent*** hybrid DS/FH was further examined by Geraniotis in 1985 [34]. Analysis of synchronous and asynchronous hybrid direct sequence/slow-frequency hopped spread spectrum was carried out over an additive white Gaussian noise channel for both *deterministic* and *random* signature sequences. Hopping rates much slower than the data rate (i.e. slow frequency hopping) were used in order to implement coherent demodulation with contemporary receivers. Two types of modulation schemes viz. BPSK and QPSK were considered. Expressions for *average probability of error* were evaluated for both asynchronous and synchronous DS/SFH systems and for quaternary and binary modulation schemes. Two different techniques were developed for the evaluation of the error probability. The first technique, based on the *characteristic function* method evaluated error probability by integrating the characteristic function of multiple access interference. Another method was based on evaluating the conditional error probability for a given number of *hits* from other users and then averaging these over the distribution of hits. A summary of pertinent numerical results from [34] is provided below:

Nature of code sequences: For binary hybrid systems, *synchronous systems with deterministic code sequences performed considerably better than synchronous systems with random signature sequences.* This may be attributed to the lower *cross correlation functions* of well chosen deterministic sequences. However, as the number of active users increases with length of the sequence (which cannot be increased indefinitely due to code acquisition and synchronization requirements) remaining constant, it is difficult to find distinct code sequences with very good cross correlation properties for all users. Thus *for hybrid SSMA systems employing random code sequences, asynchronous systems performed better than the corresponding synchronous systems.* This improved performance of asynchronous systems is due to the extra averaging with respect to the time delays which takes place in the asynchronous systems. *For deterministic code sequences, the synchronous systems outperform the corresponding asynchronous systems.*

Chip waveform: sinusoidal or rectangular

Performance of asynchronous binary and quaternary systems was analyzed for rectangular and sine chip waveforms using random code sequences. Results in [34] indicated that *hybrid systems with sine chip waveform perform slightly better than rectangular chip waveform for both the binary and quaternary modulation schemes.*

Overall, results from [34] suggest that hybrid DS/SFH systems compare favorably to the DS and SFH systems which employ identical modulation and demodulation schemes and have the same *bandwidth spread*. Synchronous hybrid SS systems supported fewer users than asynchronous hybrid SS systems when random code sequences and hopping patterns were used. Also, hybrid systems with QPSK supported fewer users than the corresponding systems employing BPSK modulation. This accounted for the fact that QPSK can support two different data streams (in phase and quadrature) for each user i.e. it has twice the data rate of a BPSK system with the same bandwidth expansion. Since both in phase and quadrature data signals in QPSK employ the same frequency carrier

and hopping pattern, whenever a hit occurs due to another user's signal, both of these interfere with that signal or vice versa. So, all hits from other signals are *double hits*. Contrary to this, in BPSK system, all the data signals employ different hopping patterns and only single hits occur from the other signals.

Another work by E. A. Geraniotis [28], published in 1986, evaluated performance of ***non-coherent*** hybrid DS/SFH spread spectrum systems. Both asynchronous and synchronous systems operating through AWGN channels were investigated. Modulation types studied were M-ary FSK and DPSK (Differential Phase Shift Keying). This work extended that of [34], and the main conclusion drawn was that the multiple access capability of non-coherent hybrid spread spectrum was superior to that of non-coherent pure frequency hopped spread spectrum, and inferior to that of non-coherent pure DSSS with the same bandwidth expansion. All results were based on hybrid systems employing random frequency hopping patterns and random code sequences. Also, when hybrid systems with coherent and non-coherent modulation were compared, non-coherent systems showed a considerable loss in performance compared to coherent systems.

Cherubini and Milstein [22] proposed a phase coherent hybrid DS/FH spread spectrum system with coherent receiver dehopping in 1989. A digital receiver was employed to track the phase of the PN sequence along with the phase of the carrier frequency to allow coherent despreading of the hybrid DS/FH signal. The performance of hybrid DS/FH systems in the presence of additive white Gaussian noise was found to depend on factors such as the number of frequency slots used, gain and quantization step size of the quantizer in the phase tracking loop of the receiver. Jammer strategy also affected performance in the presence of both partial band Gaussian noise jamming and multitone jamming. The fraction of frequency slots jammed and the choice of the jammed frequencies were typically found to affect performance. Based on their results, the authors postulated that a coherent hybrid DS/FH system will outperform a non-coherent FH system with the same processing gain. In their subsequent work [23], they employed

the concepts developed in [22] to analyze the performance of a pure phase coherent slow frequency hopped (SFH) receiver with 1 bit/hop in the presence of AWGN and partial band interference and compared the BER performance with non-coherent FSK systems. When the phase distortion in the channels was not excessive, improved performance compared to a coherent system was observed. A tradeoff was observed between the performance characteristics and transmitter receiver complexity.

Performance of a hybrid spread spectrum against ***follower jamming*** (where the jammer can follow the hopped frequencies) was analyzed by Riddle in [38] for a satellite communication system in which the jammer might detect the current hop and transmit an interfering signal to the satellite before the satellite finishes receiving that particular frequency. The importance of fast frequency hopping (FFH) in mitigating follower jamming was emphasized due to its inherent *frequency diversity*. Moreover, the frequency hops occurring during each symbol could be combined to achieve a reliable decision state. Considering the scenario when a smart receiver is able to track the hopped frequencies, a hybrid system was proposed in which each hopped frequency is spread with a PN sequence. FFH was found to combat both frequency selective fading (because of frequency diversity) and non-selective fading (when hopped frequencies are combined properly). Under severe fading conditions, follower jamming was found to be less effective against a hybrid spread spectrum system.

As with other spread spectrum techniques, hybrid systems are also prone to degrading ***effects of wireless propagation environment*** such as fading and shadowing. Some of the important analytical work done in this area was done by Sadiq et al. in [29]. Important conclusions derived from [29] are based on the performance evaluation of an asynchronous hybrid DS/FH system in the presence of a combined partial band noise (PBN), multiple access interference (MAI), Ricean fading, and AWGN. Both M-ary FSK with non-coherent demodulation and PSK with coherent modulation were used with forward error control. Main parameters investigated were: minimum carrier to

interference ratio (C/I) required for a desirable BER, and the number of users that could be supported by the network. Various jamming and interference conditions were considered. Jamming performance under Ricean fading was also analyzed. It was found that Ricean fading and partial band interference degraded the performance of both coherent and non-coherent hybrid systems. Ricean fading also increased a jammer's effectiveness in causing partial band interference. Forward error correction was found to improve the system performance under such conditions. In general, coherent systems (with slow frequency hopping) provided better performance against PBN, Ricean fading, multiple access interference and AWGN. Under severe Rayleigh fading, coherent reception became difficult. Muammar [40] studied the effects of frequency selective Rayleigh fading and ***log normal shadowing*** on a DS/FH system with differential phase shift keying (DPSK) modulation. Error probabilities were examined for a Rayleigh fading channel with and without the effects of log normal shadowing. System degradation with log normal shadowing was much smaller than that caused by Rayleigh fading. Byun et al. [42] analyzed a hybrid DS/SFH system subject to a Nakagami fading channel. The bit error probability over a Nakagami fading channel was calculated as a function of the number of jamming tones used by the jammer. Various combinations of number of hopping frequencies and spreading code sequences that satisfied an equal bandwidth constraint were employed. For a low jamming to signal power ratio (JSR) of about 10dB, a pure DSSS system was found to achieve a lower BER than a hybrid DS/SFH system. However, for higher JSR values (20 or 30dB), the hybrid DS/SFH system exhibited superior performance. Also, the worst case performance of a hybrid DS/SFH system was found to be almost equal to the nominal performance of a pure DSSS system.

Another interesting analysis by Gangadhar and Gandhi [41] focused on ***fading performance*** of a hybrid DS/FH system using more efficient modulation schemes such as MSK (Minimum Shift Keying). While BPSK and M-ary FSK have been conventionally used for direct sequence and frequency hopping systems respectively, improved

bandwidth efficiency and better performance in a multi-user environment make QPSK and MSK preferred modulation schemes. Out-of-band interference in QPSK systems is due to more sudden nulls in signal amplitude, while MSK signals retain their constant envelope. Hybrid DS/SFH systems incorporating QPSK and MSK were studied in a Rayleigh fading environment using a three-path model [41]. The gains, delays and the phase associated with each of the three paths were assumed to be statistically independent. With 100 hopping frequencies and 10 bits/hop, QPSK exhibited a rapid degradation in performance as the number of users increased. MSK, on the other hand, showed slightly better performance under similar conditions. Further analysis incorporating diversity of order 3 (from 3 path model) showed that the reduction in BER for QPSK was more pronounced for a small number of users. When the number of users increased, diversity provided only a slight improvement for the QPSK system. Much more improvement was observed for the MSK system with diversity, even for a large number of users.

The performance of hybrid DS/SFH system, under *log normal shadowing* was also investigated by Eldahab et al. in [45]. Non-coherent asynchronous systems with BPSK and GMSK modulations were analyzed and the effects of using a decision feedback equalizer were studied also. BER performance was evaluated for light, average and heavy shadowing. The hybrid system using Gaussian minimum shift keying (GMSK) modulation was found to perform better than the one using BPSK modulation. Insertion of an adaptive decision feedback equalizer in the system reduced considerably the SNR required to achieve an acceptable BER for all light, average and heavy shadowing conditions. In another work [46], the authors investigated coherent reception by synchronous hybrid DS/SFH systems for both macro-cellular and micro-cellular communications under Ricean and Rayleigh fading channels. BPSK modulation was used for this analysis. Maximal ratio combining (MRC) with Hamming and Golay codes was used in order to obtain improvement in BER performance. It was concluded that an increase in the length of code sequence (or an equivalent decrease in the FH component

of the hybrid system) resulted in gradual performance degradation until the system became pure DS, when the performance improved. Also, a need to combine diversity with coding was found to be necessary for satisfactory performance in both micro and macro cells. When the ratio of co-channel interference power to the desired channel power was varied, hybrid systems proved more robust than DS systems. Finally, BER performance of the hybrid system for both micro and macro cells was inferior to that of purely DS and FH systems.

Important work that threw light on many aspects of a hybrid DS/SFH system was done by Theodore Vlachos and Evaggelos Geraniotis in [43]. They carried out performance comparison of direct sequence (DS), slow frequency hopped (SFH) and hybrid spread spectrum systems under an equal bandwidth constraint. Concepts developed in [28] and [30] were used to extend the analysis by introducing forward error correction coding. The average error probability was evaluated for the coded hybrid DS/SFH system with BPSK and M-ary FSK modulation. Some important parameters that formed the basis of this analysis were the maximum number of simultaneous transmitters that a receiver can tolerate in its vicinity while providing a desirable BER, normalized throughput and packet error probability. Both synchronous and asynchronous systems were analyzed and the former outperformed the latter in all cases except the DSSS system. An interesting aspect of the hybrid DS/SFH system analyzed was the distribution of total processing gain among its DS and FH components, and its effect on the performance of asynchronous and synchronous systems. This effect was analyzed by assuming that the probability of a hit for synchronous systems is half that of asynchronous systems [43]. Thus, the FH component of synchronous systems is more powerful, and the DS component of asynchronous systems is superior to that of synchronous systems. In addition, as the dominance of the DS component was increased, better performance was observed for both asynchronous and synchronous systems. The ***effect of the hopping rate*** was also observed for asynchronous systems. Asynchronous systems with a large number of bits/hop outperformed systems with dwell time equal to symbol period. This

was attributed to a strong FH component due to a decrease in the probability of occurrence of hits. The effectiveness of two demodulation schemes (i.e. counting errors and counting erasures) was also considered in [43]. It was found that the erasures only decoding scheme was advantageous for only pure SFH systems. Hybrid systems, on the other hand, performed better under the errors only decoding scheme even those hybrid systems with the weakest DS components.

The ***interference rejection capability*** of DS, SFH and hybrid DS/SFH was also investigated. It was found that systems with dominant DS components outperformed those with dominant FH components at low interference levels. While DS systems performed better than hybrid systems, hybrid DS/SFH, in turn, were superior to the SFH system. When the interference reached a critical point, the situation tended to reverse and the systems with dominant FH components showed better performance. The critical level of interference depended on the specific system parameters. Receivers with dominant DS components were found to have more tolerance for simultaneously transmitted signals in their vicinity. Geraniotis (in [28] and [30]) reported that this was also true for uncoded hybrid systems. Another important conclusion was that hybrid schemes provided higher overall throughput performance over a wide range of packet error probabilities and were particularly promising when coding was used. This appeared to result from more efficient interleaving than DS systems and their larger multiple access capability than FH systems.

The ***synchronization*** *process* is a critical part of any spread spectrum system (Loh, [44]). A hybrid DS/FH system requires synchronization of both the hop sequence and the code sequence. In [44], the acquisition performance of a hybrid DS/SFH system was analyzed in the presence of multitone jamming. Expressions were evaluated for the probability of successful synchronization both in the presence and absence of jamming. The synchronization performance was found to improve with an increasing chip energy to noise power spectral density ratio, in the absence of jamming. Thus for a given Eb/No, a lower spreading gain could be used for satisfactory synchronization performance. In the

presence of a jammer, much more spreading gain was required in order to obtain better performance. Thus jammed and unjammed frequency lots in a hybrid DS/SFH system differ in their spreading gain requirements and a tradeoff must be devised in order to effectively synchronize both of these.

Geraniotis and Ghaffari [39] defined the ***broadcast capability*** of spread spectrum systems, as the maximum number of simultaneous distinct messages that can be transmitted to distant receivers from a single transmitter at a given BER. A hybrid DS/FH system consists of multiplexed DS spread signals that are frequency hopped according to a hopping pattern instead of being broadcast on a single carrier frequency. It was envisioned in [39], that a hybrid system will be able to mitigate the near-far problem inherent in DS broadcast systems. If all the stations in a LAN use the same frequency hopping pattern and different code sequences and other LANs in the system also use different code sequences, then this arrangement would reduce the near-far problem substantially, since DS modulation is being used only within a particular LAN where the separation between stations does not vary much. Also, communication between different LANs was found to improve due to a combination of FH and DS systems. This shows that hybrid systems are very flexible and can be modified in several ways to get desired performance in different parts of the same network. The approach can also be extended to include several systems with different requirements. Results in [39] demonstrated that hybrid DS/FH system configurations can be used to increase the broadcast capability of a network and the capacity is further improved by using forward error control coding.

Study of non-coherent systems was justified for contemporary receivers, that could acquire time synchronization with the desired signal, but for which obtaining a phase reference was not feasible. Further work on non-coherent hybrid spread spectrum was carried out in 1988 [36] with M-ary FSK and forward error correction coding. It was shown that the error correction coding reduced the minimum carrier-to-interference ratio required for an acceptable BER value. This carrier to interference ratio(C/I) was found to

be a function of the band which was jammed. When the C/I ratio remained fixed, it was observed that the number of users that could be supported by the system also increased and was a function of the band that was jammed. Partial band interference, in general, degraded the performance of a hybrid multiple access system. With a fixed number of users, partial band noise resulted in an increased SNR (signal to noise ratio) required for an acceptable BER. On the other hand, for a fixed SNR value, the number of users in the network was found to decrease due to partial band noise for a non-coherent hybrid spread spectrum system. Performance under worst case partial band noise was shown to improve with forward error correction coding.

Recent work on coded spread spectrum by Liu et al. in [47] included a hybrid DS/FH communication system using FPGA to implement correlator, digital down converter, PN code generator, and matched filters. A frequency synthesizer was implemented using DDS (digital direct synthesis). The receiver could achieve a target bit rate of 19.2kbps and slow frequency hopping was used.

3.2 What is missing?

From the literature review above, it can be concluded that hybrid spread spectrum systems hold significant promise for future improvement of communication systems. However, a thorough analysis of hybrid systems, emphasizing the effect of fast frequency hopping (FFH), still needs to be done. This investigation, including the FFH component in a hybrid system, will be useful to compare various spread spectrum techniques. Assuming fast frequency hopping rates that are limited only by the current technology of frequency synthesizers, an analysis should be carried out under AWGN, Rayleigh and interference environments. A hybrid system is very flexible and exhibits performance variations when subjected to different combinations of dwell times, number of hopping frequencies used and length of the PN sequence [43]. Thus, hybrid DS/FFH systems also

deserve a parametric analysis. In the same way, comparison of spread spectrum techniques would be incomplete without including hybrid DS/FFH results.

3.3 Present Thesis – Goals

In our present research work, we attempt to explore the performance of hybrid DS/FFH systems in AWGN, Rayleigh and interference environments. Also, a comparison of hybrid systems with slow and fast frequency hopping is carried out. In order to establish conditions under which a particular hybrid scheme will serve as the best choice, DS, SFH and FFH systems are also analyzed. In order to obtain consistent results, BPSK modulation with coherent demodulation at the receiver will be used for all systems. An equal bandwidth constraint will be maintained for all systems. Different combinations of dwell times and number of hopping frequencies will be used to study the performance variations of hybrid DS/SFH and hybrid DS/FFH systems. Simulation models and the assumptions involved are presented in Chapter 4.

Chapter 4

System Models

In this chapter the simulation models of five different spread spectrum systems: DSSS, SFH, FFH, Hybrid DS/SFH and Hybrid DS/FFH will be presented. First, a common channel model used for fading analysis is presented in Section 4.1. The same Rayleigh fading generator is used in all the models as a basis for comparison. However, interference models for different spread spectrum techniques vary substantially from each other in implementation details due to different spreading techniques. All interference models are similar in that other users in a particular model use the same technique as the desired user. For example, in DSSS model, all the users use direct sequence spread spectrum technique only and there are no FH or hybrid users. This has been done to simplify the design and to study the interference mitigating capabilities of various techniques among similar interfering signals. Simulation technique and assumptions

involved are described in Section 4.2. DSSS system model is presented in Section 4.3 followed by FHSS system model in Section 4.4. Slow and fast frequency hopping synthesis is explained in Section 4.5. Model for hybrid DS/FH system is presented in Section 4.6.

4.1 Channel Model

Before developing a channel model for various spread spectrum techniques described here, it is important to understand fading characteristics of mobile radio channels.

4.1.1 Fading in Mobile Radio Channels

Rappaport [4] characterized a wireless channel by two types of fading effects: large scale fading and small scale fading. *Small scale fading* is used to describe the fluctuations in amplitude, phase or multipath delays of a radio signal over a short period of time or travel distance. *Large scale fading* is a slow variation of the mean signal power over time. Two or more versions of a transmitted signal that arrive at the receiver at slightly different times are referred to as *multipath waves*. Delay spread and *coherence bandwidth* are important parameters that describe the time-dispersive nature of the channel. The coherence bandwidth is statistically defined as the range of frequencies over which a channel passes all spectral components with approximately equal gain and linear phase. If the separation between two frequencies is greater than the coherence bandwidth, then signal transmission on these two frequencies will be affected differently by the channel. In our present work, the smallest spacing between frequency hop slots is assumed larger than the coherence bandwidth of the channel, so that each hopped signal fades independently.

Doppler spread and *coherence time* are other parameters that describe the time varying nature of the channel caused by relative motion between a mobile unit and base station or by moving objects within a channel. When a sinusoidal tone of frequency f_c is transmitted through a channel with relative motion between objects, then the received signal spectrum will have spectral components in the range $f_c - f_d$ to $f_c + f_d$, where f_d is the Doppler shift. Doppler spread is a measure of the spectral broadening caused by f_d and is defined as the range of frequencies over which the received Doppler spectrum is not zero [4]. Coherence time is the time duration over which the received signals have a strong potential for amplitude correlation. Doppler spread and coherence time are inversely proportional to one another. Baseband signal bandwidth is assumed much greater than the Doppler spread in this thesis so that the effects of Doppler spread are negligible at the receiver and thus the channel is a slow fading channel.

A transmitted signal affected by multipath reflection can undergo either *flat fading* or *frequency selective fading.* If a radio channel has constant gain and linear phase response over a bandwidth that is greater than the bandwidth of the transmitted signal, then the received signal will undergo flat fading. Flat fading channels are also known as amplitude varying channels. Distribution of the instantaneous gain of flat fading channels is used to model wireless links, with the *Rayleigh fading distribution* being the most common. It is well known that the envelope of the sum of two quadrature Gaussian noise signals obeys this Rayleigh distribution. Fading is modeled as Rayleigh if the multiple reflective paths are large in number and there is no dominant line-of-sight (LOS) propagation path. If there is a dominant LOS path, then the fading is Ricean distributed. If x_i and y_i represent samples of zero-mean stationary Gaussian random processes each with variance σ_o^2 and β is the amplitude of the LOS component, then the fading amplitude at the *i*th instant of time can be represented as

$$\alpha_i = \sqrt{(x_i + \beta)^2 + y_i^2} \quad \ldots\ldots\ldots\ldots\ldots\ldots\ldots\ldots\ldots\ldots\ldots\ldots\ldots\ldots (1)$$

For Ricean fading, the ratio of power in the LOS component to the variance of multipath signal amplitude is known as the Ricean *K* factor,

$$K = \beta^2 / 2\sigma_o^{\,2} \quad \ldots\ldots\ldots\ldots\ldots\ldots\ldots\ldots\ldots\ldots\ldots\ldots\ldots\ldots\ldots\ldots\ldots\ldots. \ (2)$$

The best Ricean fading channel will have $K = \infty$ which will be a Gaussian channel. Worst case Ricean fading will occur when $K = 0$ and thus the fading will be pure Rayleigh according to (1). Thus Rayleigh fading represents worst case fading phenomenon with no LOS component and is a special case of Ricean fading. Ricean probability density function (pdf) is given by

$$f_{Rice}(\alpha) = \frac{\alpha}{\sigma_o^{\,2}} \exp\left[-(\alpha^2 + \beta^2)/2\sigma_o^{\,2}\right] I_o\left[\frac{\alpha\beta}{\sigma_o^{\,2}}\right], \alpha \geq 0 \ ; \ \ldots\ldots\ldots \ (3)$$

where $I_o[\cdot]$ is the zero order modified Bessel function of the first kind. Now, if there is no dominant propagation path, $K = 0$ and $I_o[\cdot] = 1$, the worst case Rayleigh pdf being

$$f_{Rayleigh}(\alpha) = \frac{\alpha}{\sigma_o^{\,2}} \exp\left[-\alpha^2 / 2\sigma_o^{\,2}\right], \alpha \geq 0 \ \ldots\ldots\ldots\ldots\ldots\ldots\ldots\ldots\ldots \ (4)$$

For the purpose of analysis in this work, independently generated worst case Rayleigh flat fading channels are employed. Frequency selective fading occurs when the channel possesses a constant gain and linear phase response over a bandwidth that is smaller than the bandwidth of the transmitted signal. The received signal includes multiple versions of the transmitted waveform, which are attenuated and delayed in time, and hence the received signal is distorted. In the frequency domain, certain frequency components in the received signal spectrum have greater gains than others. Frequency selective fading channels are difficult to model, since each multipath signal must be separately modeled. Frequency hopping systems might prove beneficial in frequency selective fading environments, as explained previously in Chapter 2, but only flat fading channels are assumed in this work.

4.1.2 Channel Parameters

Some channel parameters such as bit period or data rate, type of modulation, and total spread bandwidth are assumed common for all the systems for fair comparison. Baseband simulations in MATLAB are carried out for all five systems assuming available bandwidth lying within the ISM bandwidth of 2.4-2.483 GHz. Binary Phase shift keying is used for all systems under investigation. A modest data rate of 100 kbps is assumed. An equal bandwidth constraint is assumed for comparison purposes.

4.2 Simulation Technique and Assumptions

A Monte Carlo Simulation Technique is used to generate BER performance curves. It is important to make some basic assumptions to simplify the simulation model.

1. There is no pulse shaping performed at the transmitter.
2. Data symbols at the source output are independent and are equally probable.
3. There is no filtering within the system and, as a result, there is no inter-symbol interference.
4. Coherent detection is assumed for all systems.

The noise standard deviation σ_n can be established by considering the relation between the noise variance σ_n^2 and noise power spectral density N_o (Tranter et al. [48])

$$\sigma_n^2 = \frac{N_o f_s}{2} \quad \text{.....} \quad (5)$$

where f_s is the sampling frequency. The signal to noise ratio SNR is defined as E_b / N_o where E_b is the energy per bit. Thus,

$$SNR = \frac{f_s E_b}{2\sigma_n^2} \quad \text{.....} \quad (6)$$

To establish a simple expression for noise standard deviation, energy per bit E_b and the sampling frequency f_s are both normalized to one and a simple expression for σ_n given by (7) is used to establish AWGN performance.

$$\sigma_n = \sqrt{\frac{1}{2SNR}} \quad \text{.....} \quad (7)$$

4.3 DSSS System Model

The DSSS simulation model for K Rayleigh faded users is presented in Figure 4.1. The *k*th user's data signal $d_k(t)$ represents a sequence of binary ones and zeros as rectangular pulses of duration T_b. The *k*th user is assigned a code waveform $c_k(t)$ which consists of a periodic sequence of unit amplitude, positive and negative rectangular pulses of duration T_c. The period or length of code depends on the spreading factor used by the system. It is assumed that the *k*th user's code sequence has period $N = T_b / T_c$ so that there is one code period per data symbol. The data signal is BPSK modulated on to its carrier to generate the transmitted signal $s_k(t)$ given by,

$$s_k(t) = \sqrt{\frac{2E_b}{T_b}} d_k(t) c_k(t) \cos(2\pi f_c t + \theta) \quad \text{.....} \quad (8)$$

where θ represents phase of the carrier. If B is the bandwidth of conventionally modulated signal $d_k(t)\cos(2\pi f_c t + \theta)$ and B_{ss} is the bandwidth of the spread signal $s_k(t)$, then an approximate measure of interference rejection capability would be B_{ss} / B [4]. A bank of K independent Rayleigh fading generators is used to introduce fading.

Spread data for *k*th user is multiplied with its corresponding fading envelope $\alpha_k(t)$ to generate a faded signal for the *k*th user, given by,

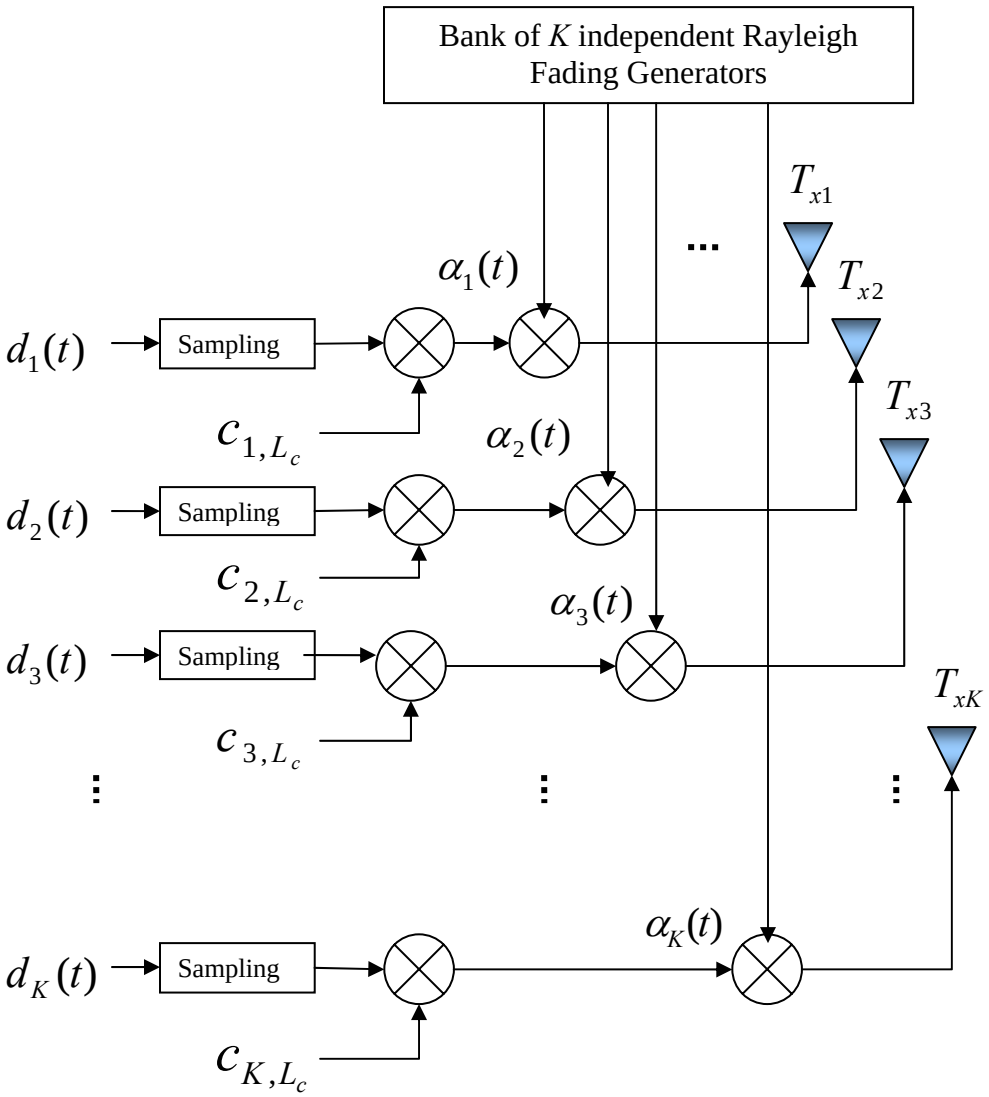

Figure 4.1: DSSS Transmitter for K Users

$$s_{\alpha,k}(t) = \sqrt{\frac{2E_b}{T_b}} d_k(t) c_k(t) \alpha_k(t) \cos(2\pi f_c t + \theta), \ldots\ldots\ldots\ldots\ldots\ldots \quad (9)$$

The received signal is the sum of faded signals from all users, with additional degradation due to AWGN noise. The model presented in Figure 4.1 seems simple, since many of implemental details are not shown. Code sequences for all users are generated using maximal length LFSRs described in Chapter 2. For the sake of simplicity and to provide a basis for comparison between various systems, a Rayleigh envelope is generated by combining the output of two random generators according to (1) with $\beta = 0$. The total multiple access interference experienced by the *k*th user from $K-1$ other users can be approximated by a Gaussian random variable [4]. The average bit error probability using this approximation is given by

$$P_e = Q\left[\frac{1}{\sqrt{\frac{K-1}{3N} + \frac{N_o}{2E_b}}}\right] \ldots\ldots\ldots\ldots\ldots\ldots\ldots\ldots\ldots\ldots\ldots\ldots \quad (10)$$

For a single user i.e. $K = 1$, and the above expression reduces to the BER expression for simple BPSK modulation. This result is used to validate the simulation model for the DSSS system in Chapter 5. The correlation receiver implementation for the *k*th user is shown in Figure 4.2. The baseband received signal for the *k*th user is despread by multiplying it with the code sequence $c_k(t)$. A decision variable is generated by summing over one period (equivalent to one symbol interval for BPSK) of code sequence. Estimation is carried out by simple comparison with a threshold.

4.4 FHSS System Model

A frequency hopped BPSK signal for the *k*th user can be visualized as one in which the carrier deviates pseudo-randomly, as dictated by the hopping sequence. Mathematically,

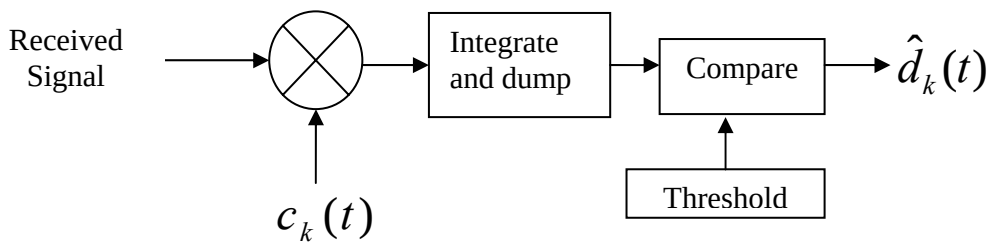

Figure 4.2 : DSSS Receiver for *k*th User

a frequency hopped signal for *k*th user can be represented as

$$s_k(t) = \sqrt{\frac{2E_b}{T_b}} d_k(t) \cos\{[2\pi(f_c + f_{\Delta,k})t + \theta]\}, \ldots\ldots\ldots\ldots\ldots\ldots \quad (11)$$

where $f_{\Delta,k}$ is the pseudorandom frequency deviation. Assuming initial phase $\theta = 0$, the above equation can be rewritten as,

$$s_k(t) = \sqrt{\frac{2E_b}{T_b}} \underbrace{\mathrm{Re}\{d_k(t)\exp(j2\pi f_c t)\}}_{I} \underbrace{\mathrm{Re}\{\exp(j2\pi f_{\Delta,k} t\}}_{II} \ \ldots\ldots\ldots\ldots \quad (12)$$

Part I of (12) is the conventional BPSK modulated signal and part II provides the frequency hopping character of the signal. For simulation purposes, a low pass complex envelope of BPSK signal (+1 and -1 corresponding to 1 and 0 values of $d_k(t)$) is simply multiplied by part II of (12). Frequency deviation values $f_{\Delta,k}$ are obtained by using a PN sequence generator and frequency synthesizer look-up table. The PN sequence generator is the same as that used for the DSSS system. However, unlike the DSSS system, the period of the PN sequence is dictated by the number of hopping frequencies and dwell time (slow or fast frequency hopping). Realization of slow and fast frequency hopping, using the same PN sequence generator for varying dwell times is explained in next section. A frequency hopping transmitter for the *k*th user is shown in Figure 4.3, where

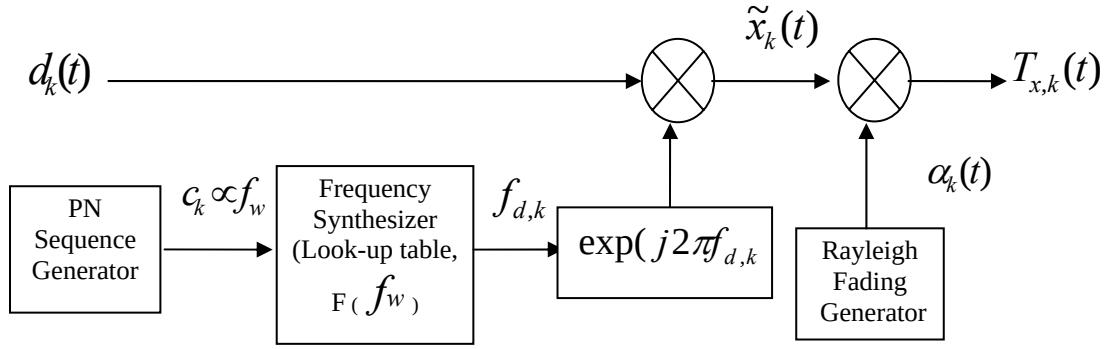

Figure 4.3 : FH Transmitter for *k*th User

$d_k(t)$ represents the low pass envelope of BPSK modulated data. Fading in frequency hopping systems is simulated by using a similar bank of Rayleigh fading generators as used for DSSS system. Thus, the faded signal for a frequency hopping *k*th user is given by

$$s_k(t) = \sqrt{\frac{2E_b}{T_b}} d_k(t)\alpha_k(t)\,\mathrm{Re}\{\exp(j2\pi f_{\Delta,k}t\} \ldots\ldots\ldots\ldots \quad (13)$$

where $d_k(t)$ represents low pass envelope of BPSK modulated data. In our present work, we assume that there is perfect synchronization between the transmitter and receiver, and that coherent demodulation is feasible. The receiver implementation uses the same set of PN sequence generator and frequency deviation lookup tables as is used by the transmitter; however, dehopping is executed by multiplying the received signal with $\exp(-j2\pi f_{\Delta,k}t)$. This complex conjugate operation is equivalent to baseband dehopping. The dehopped signal is integrated over one bit period and the result is compared to the threshold. A receiver model for a single user is shown in Figure 4.4. Slow and fast frequency hopping and dehopping are analyzed in section 4.5. Both slow and fast frequency hopping systems are simulated for the ISM band (2.4-2.483 GHz). The number of hopping frequencies used are 8, 16, 32 and 64. These numbers are chosen

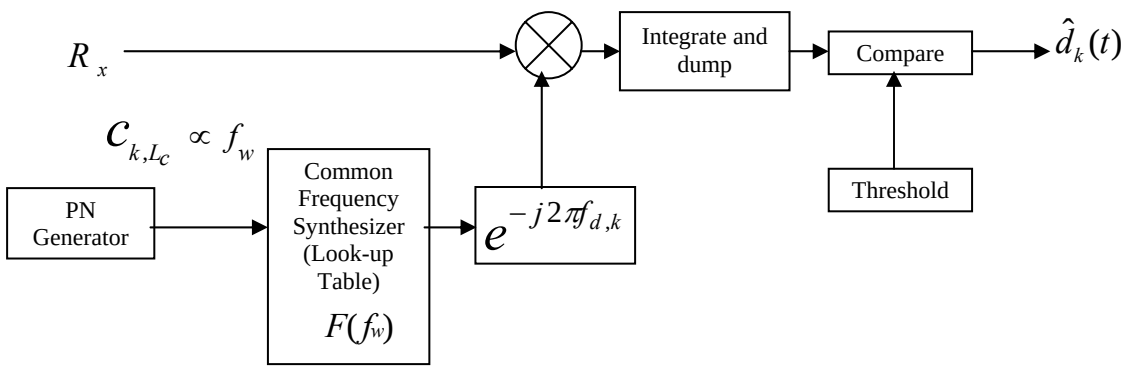

Figure 4.4 : FH Receiver for *k*th User

to maintain consistency with the DSSS system, for which these numbers are used as spreading factors. Also, both slow and fast hopping systems are simulated for identical dwell intervals and hopping frequencies. The values of dwell intervals studied are 2, 4 and 8. A *K* user frequency hopping transmitter system is shown in Figure 4.5 (next page).

4.5 Slow and Fast Frequency Synthesis

Fast and slow frequency synthesis is carried out by using the same set of PN sequence generator and lookup tables. The PN generator is programmed to generate a sequence the length of which depends on three factors: a) Mode of hopping (slow or fast); b) block size used; and c) the number of hopping frequencies generated. The frequency synthesizer program works on these three parameters to generate a spreading factor that is input to the PN generator. For example, in order to generate $N_f = 8$ different frequency deviation values, a simple calculation for the required SF would be $SF = 4 * 8 = 32$. Thus, a PN sequence of length 31 will be generated, the first 24 bits of which are grouped to form 8 frequency code words. This group of eight frequency words forms the hopping

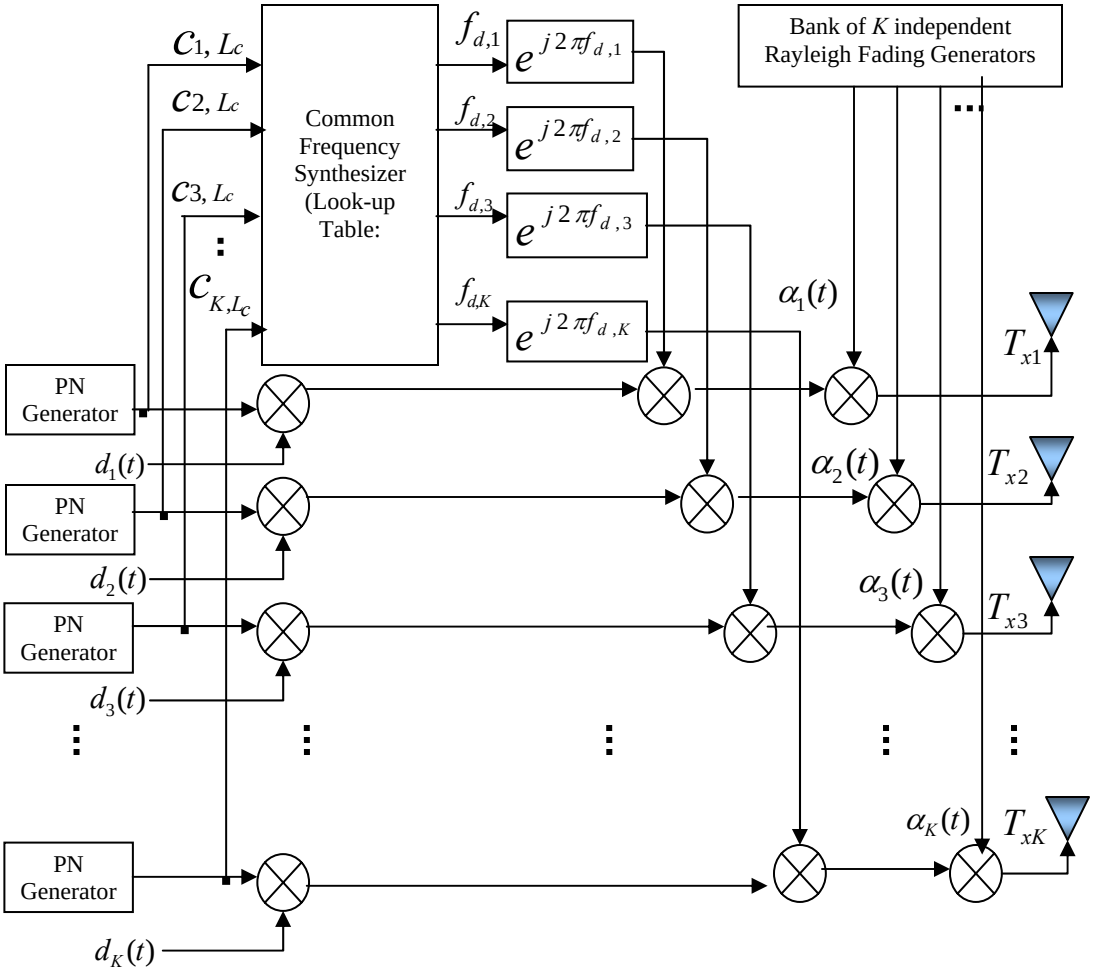

Figure 4.5 : Frequency Hopping Transmitter for K Users

sequence which is further formatted for the given block size and dwell time to generate a frequency deviation array. For slow frequency hopping, each word of the hopping sequence is replicated to equal the number bits/dwell until the block size ends. For fast frequency hopping, instead of replicating every word of the sequence, the whole sequence is applied to a block of data. For the same number of hopping frequencies used, the processing time for fast frequency synthesis exceeds the slow frequency synthesis time, since more than one deviation value is generated per bit. A frequency look-up table stores the frequency deviation values for all 64 frequencies used in this analysis. Frequency deviation values in look-up table represent the deviation from carrier frequency. To simplify the design, the carrier frequency is assumed to be 2.4 GHz at the lower end of ISM band, and all deviations are deviations from this frequency. The minimum frequency separation between adjacent frequencies to maintain orthogonality [17] is $\Delta f = 1/T_b$ where T_b is the bit period. Thus all the resultant frequencies are assumed to be separated from each other by $10/T_b$ to maintain sufficient orthogonality. When the look-up table is addressed by a particular frequency word f_w, it then outputs the deviation value corresponding to this word. A flowchart showing frequency synthesis for slow and fast frequency hopping is shown in Figure 4.6.

4.6 Hybrid DS/FH Model

The hybrid signal for the *k*th user can be mathematically represented as

$$s_k(t) = \sqrt{\frac{2E_b}{T_b}} d_k(t) c_k(t) \cos\{[2\pi(f_c + f_{\Delta,k})t + \theta]\} \quad (14)$$

where $d_k(t)$ is *k*th user's data signal, $f_{\Delta,k}$ is the pseudorandom frequency deviation and $c_k(t)$ is the *kth* user's assigned code. Assuming an initial phase $\theta = 0$, the above equation can be rewritten as,

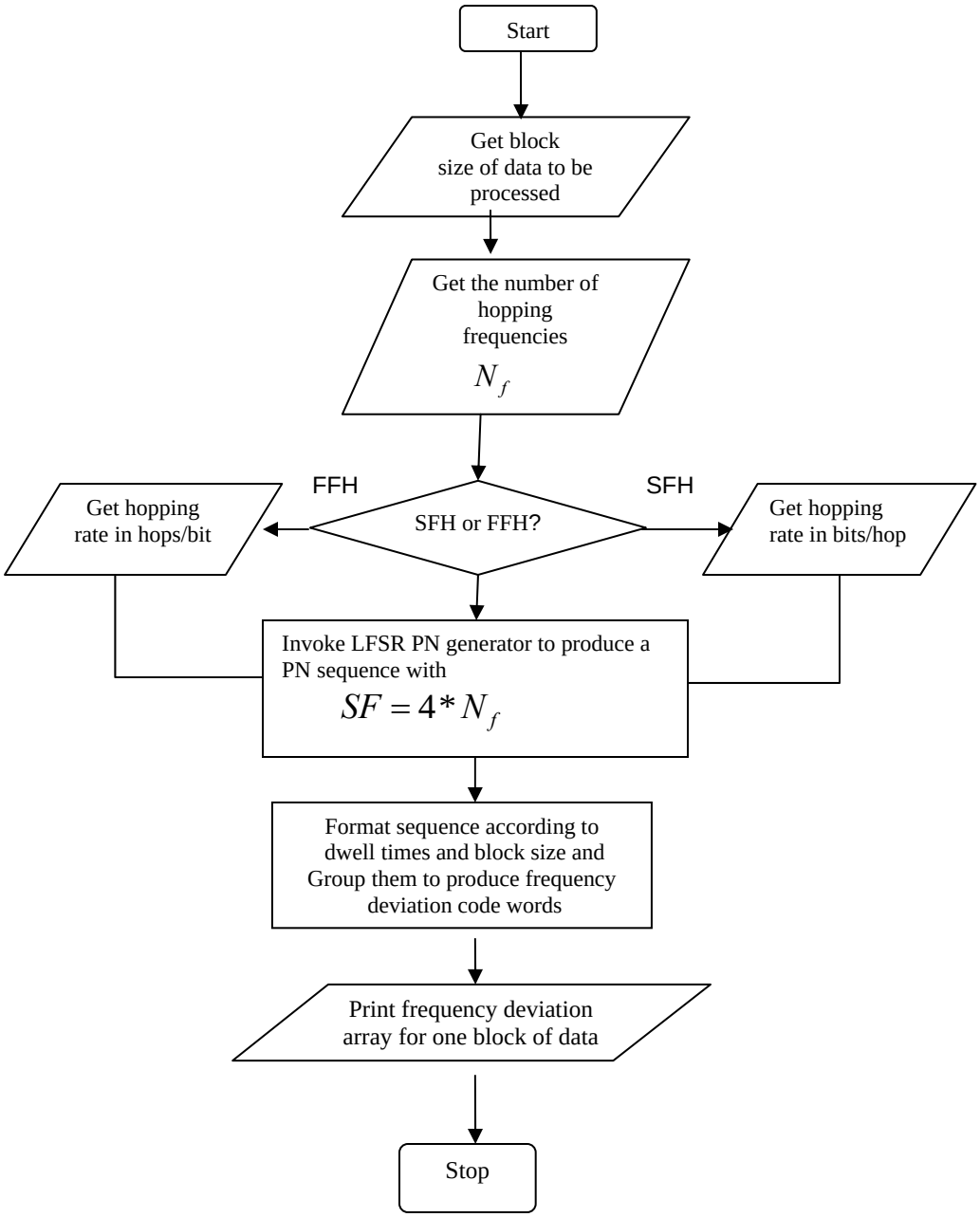

Figure 4.6 : Flowchart for Frequency Synthesis

$$s_k(t) = \sqrt{\frac{2E_b}{T_b}} \underbrace{\mathrm{Re}\{d_k(t)c_k(t)\exp(j2\pi f_c t)\}}_{I} \underbrace{\mathrm{Re}\{\exp(j2\pi f_{\Delta,k} t\}}_{II} \ldots\ldots\ldots\ldots\ldots\ldots\ldots\ldots\ldots\ldots\ldots (15)$$

Part I of (15) represents the DSSS portion of the hybrid DS/FH signal and part II contains the frequency hopping nature of the signal. Slow and fast synthesis is carried out as explained in Section 4.5.

The faded hybrid DS/FH signal for the *k*th user is given by

$$s_k(t) = \sqrt{\frac{2E_b}{T_b}} d_k(t)c_k(t)\alpha_k(t)\,\mathrm{Re}\{\exp(j2\pi f_{\Delta,k} t\} \ldots\ldots\ldots\ldots\ldots\ldots\ldots (16)$$

A hybrid DS/FH model can be visualized as a combination of the DSSS model and the FHSS model. A hybrid model for *k*th user is shown in Figure 4.7. A common PN sequence generator is used to spread the data and to address the frequency synthesizer look-up table, where all frequency deviations used for hopping are stored. As for other systems described before, Rayleigh fading is introduced before the signal is transmitted. The block diagram of a hybrid receiver is shown in Figure 4.8. The received signal is first dehopped by using the same frequency look-up table used at the transmitter for the hopping operation. The dehopped signal is further despread by multiplying with the *k*th user's unique PN sequence. Simulation parameters for hybrid systems were selected in such a way that the equal bandwidth criterion is satisfied [43]. For example, a hybrid system with 8 hopping frequencies and a PN sequence with SF=8 is equivalent to a DSSS system with PN sequence of 63 chips (SF=64) or a frequency hopping system with 64 hopping frequencies. A hybrid DS/FH model for *K* users is shown in Figure 4.9.

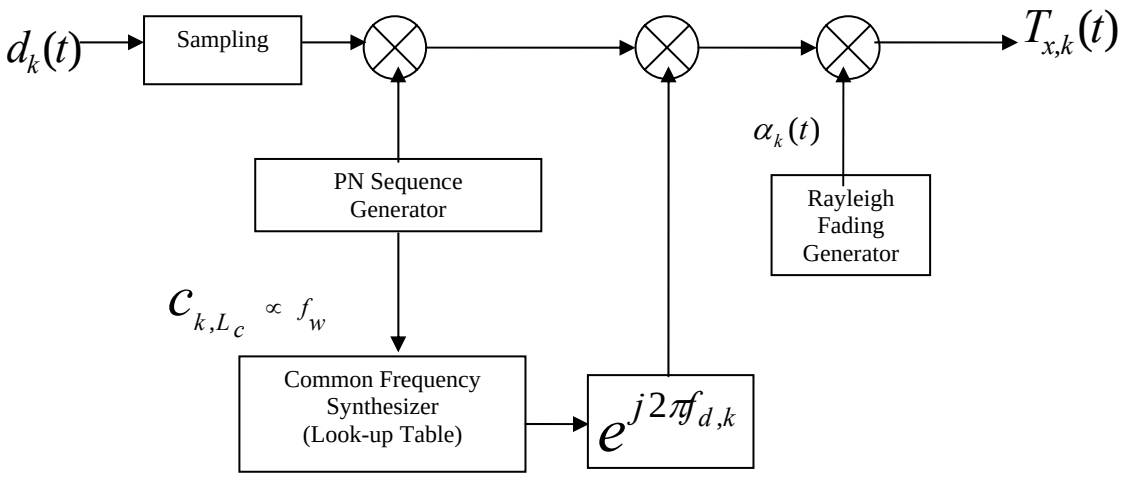

Figure 4.7 : Hybrid DS/FH Transmitter for *k*th User

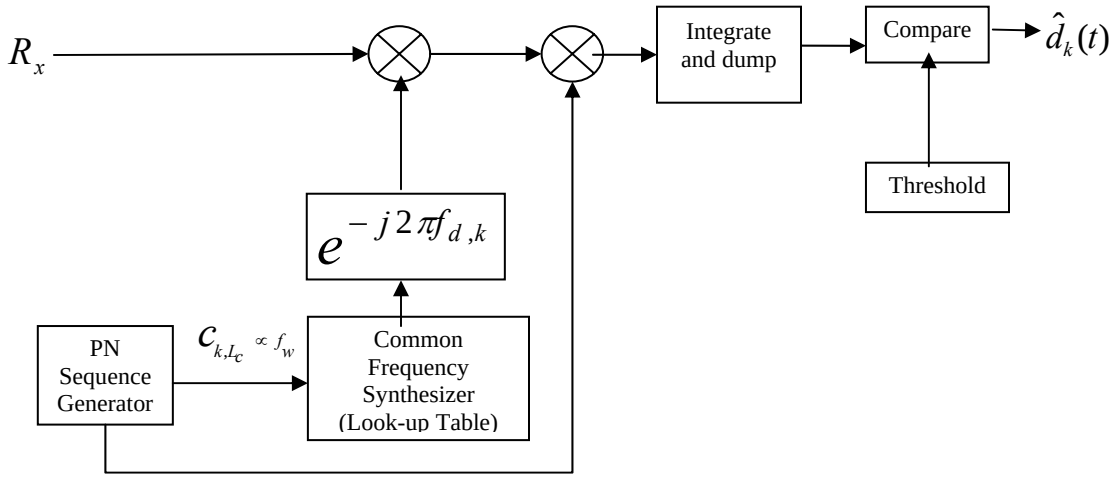

Figure 4.8 : Hybrid DS/FH Receiver for *k*th User

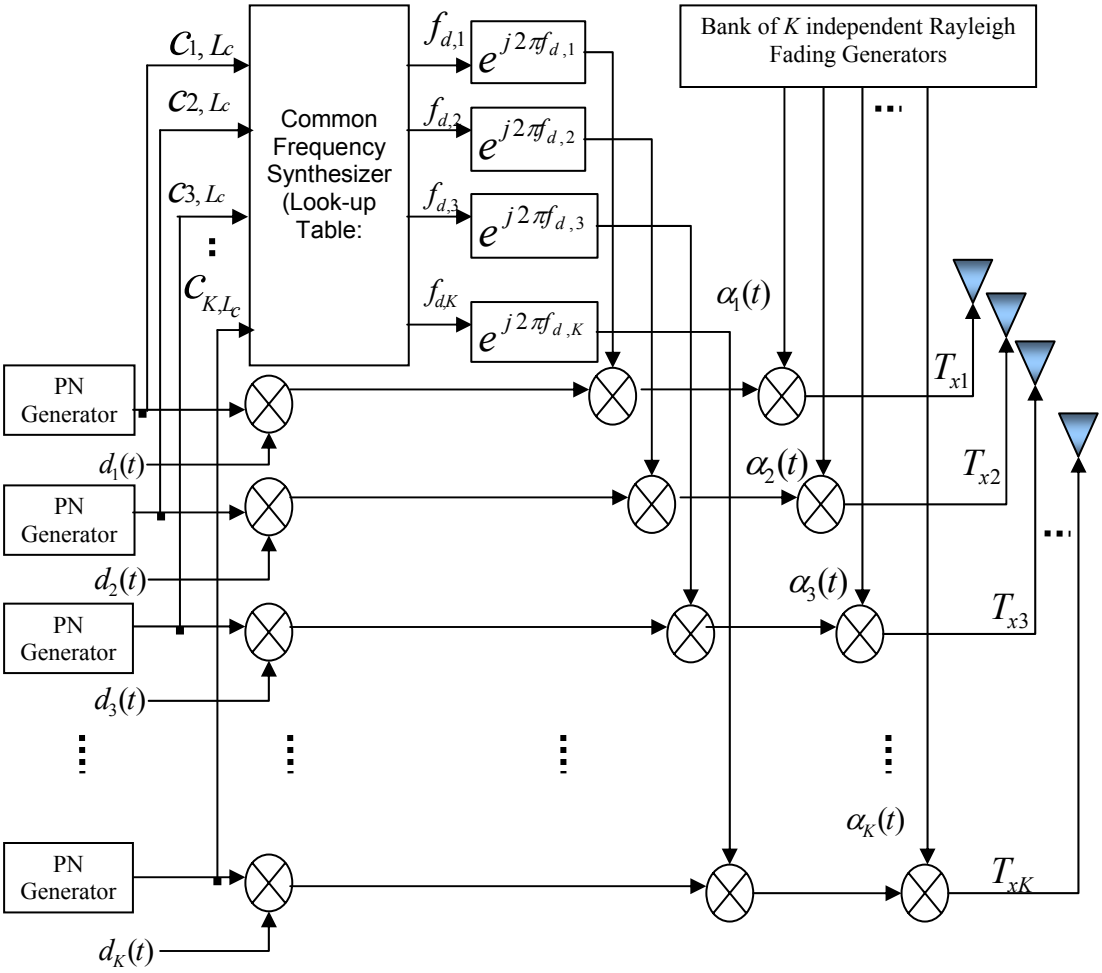

Figure 4.9 : Hybrid DS/FH Transmitter for *K* Users

Chapter 5

Simulation Results

Performance results are presented and discussed in this chapter for the spread spectrum systems discussed previously. All the results are from system models realized in MATLAB using the Monte Carlo simulation technique. Simulations were carried out at baseband by using complex envelope models. Data bits are assumed to be rectangular in shape. Perfect synchronization between transmitter and receiver is assumed. In order to validate the system performance, various spread spectrum systems were simulated for a single user and in the absence of Rayleigh fading. The validity of system models is checked by their conformity to BPSK performance characteristics under AWGN environment when there is no fading and multi-user interference is absent, the only degrading effect being AWGN. Performance results for all the systems under such

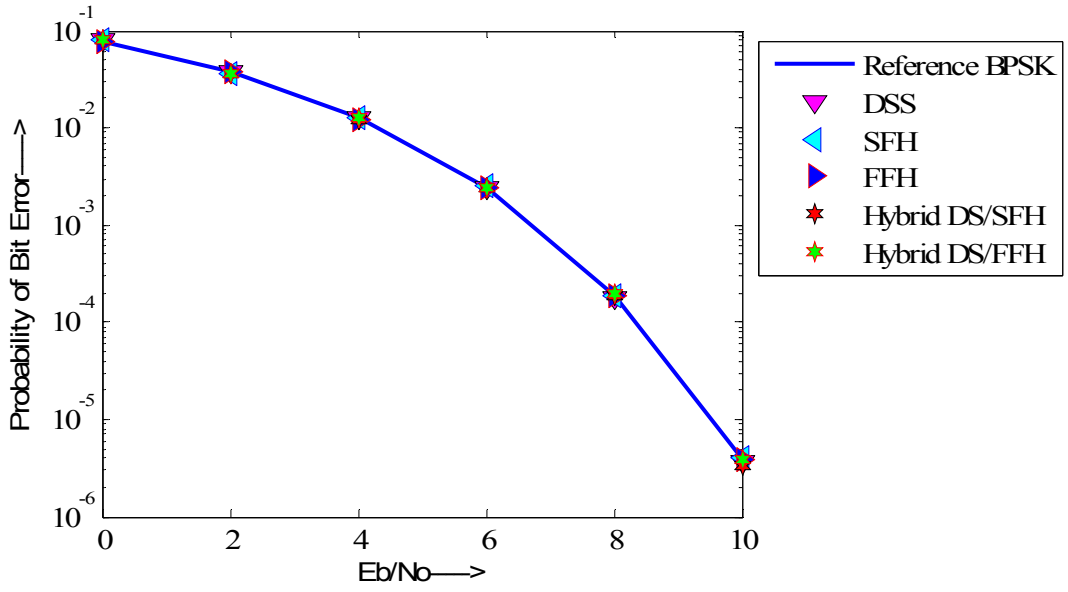

Figure 5.1 : Validation Performance of Various Spread Spectrum Techniques.

conditions are presented in Figure 5.1. It is clear that the performance is very close to the reference BPSK curve. The results in Figure 5.1 provide the reference against which Rayleigh fading performance and multi user interference performance is compared.

The following Section presents results for the DSSS system. Section 5.2 focuses on performance of slow frequency hopping systems, followed by fast frequency hopping results in Section 5.3. Hybrid slow frequency performance is the topic of discussion in Section 5.4. Results for hybrid fast frequency hopping are presented in Section 5.5. Finally, a comparative analysis of hybrid systems is carried out in Section 5.6.

5.1 Direct Sequence Spread Spectrum: Performance Results

The main parameter to be considered in the analysis of DSSS systems is the spreading factor SF. Theoretically, as discussed in previous chapters, the higher the spreading factor, the better the performance. Performance of a direct sequence spread spectrum

system in a Rayleigh fading environment is presented in Figure 5.2 for SF = 8, 16, 32 and 64. Performance improvement is observed as the spreading factor increases from 8 to 64. DSSS performance is also analyzed for multiuser interference for varying number of users. The BER performance curves for a varying number of users in a Rayleigh fading environment are presented in Figure 5.3 for SF=64. It is clear that the performance degrades gradually as the number of users is increased from 10 to 30. Even in the presence of 30 users, the system is able to provide an acceptable voice BER of 10^{-3} at a E_b / N_o value of just 10 dB. Thus the system can accommodate many users even without error correction coding. It can be inferred from Figures 5.2 and 5.3 that a lower spreading factor than 64 will provide a BER greater than 10^{-3} at 10 dB, while a higher SF than 64 will reduce the BER and thus many more users than 30 will be accommodated at 10 dB for a BER of 10^{-3}.

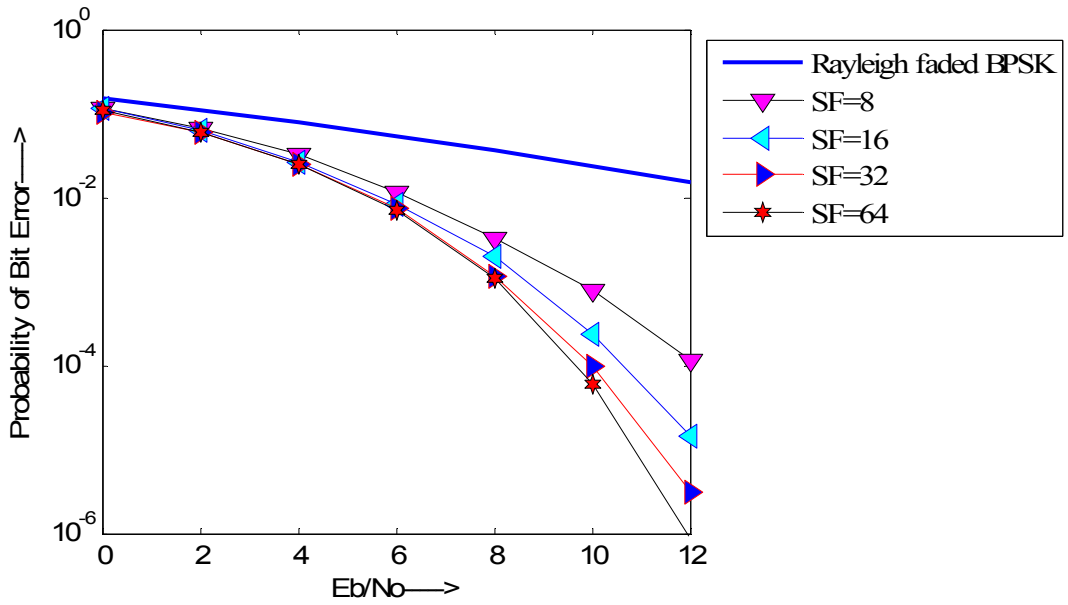

Figure 5.2 : Performance of a Single User System in an AWGN and Rayleigh Fading Environment for Selected SFs.

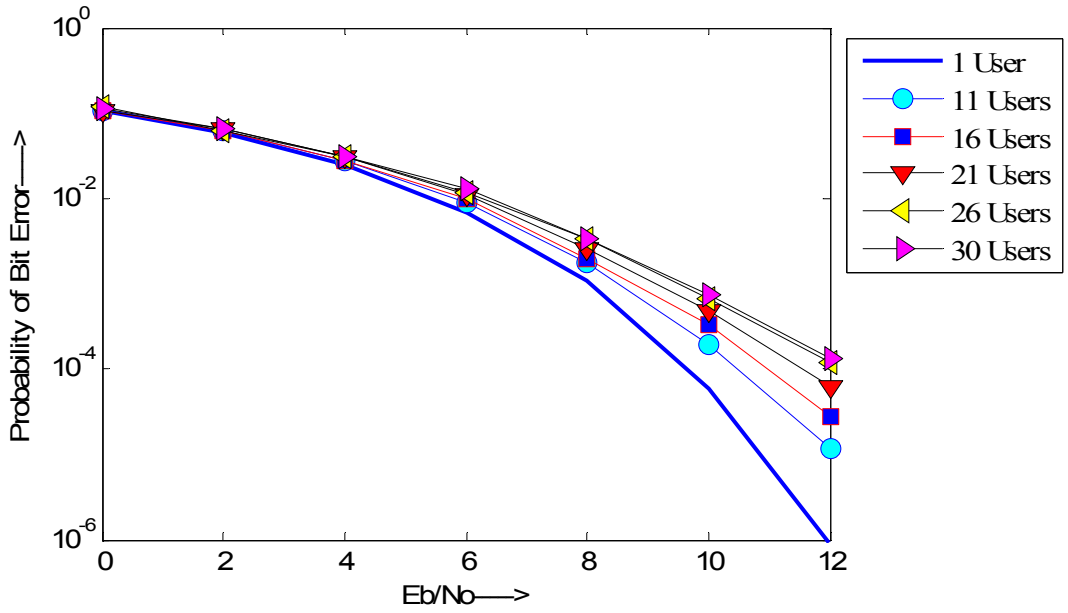

Figure 5.3 : DSSS Performance in a Rayleigh Fading Environment for Varying Number of Users.

Finally, a DSSS system was studied with 10 users and selected spreading factors. Results are presented in Figure 5.4. As compared to Figure 5.2, performance degrades drastically for a 10 user system. For example, in a single user system, for SF=64, a BER of 10^{-6} could be obtained at E_b / N_o =12 dB. On the other hand, in a 10 user system, a BER of 10^{-5} is obtained at 12 dB for SF=64. Also, for a single user, an acceptable BER of 10^{-3} was attainable for SF as low as 8, around E_b / N_o =10 dB, while a 10 user DSSS system has a BER lower than 10^{-2} even at E_b / N_o =12 dB. Therefore, it can be inferred that in order to accommodate more users in the system, the SF should be increased accordingly.

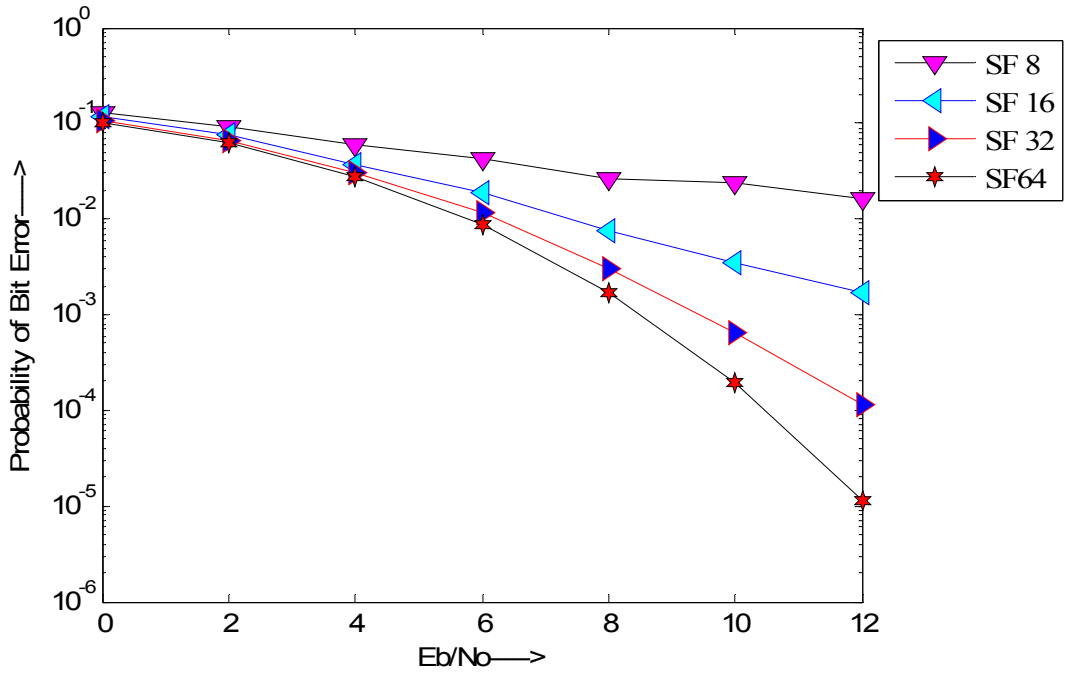

Figure 5.4 : DSSS Performance with Different SFs for 10 Users Under Rayleigh Fading

5.2 Slow Frequency Hopping: Performance Results

For slow frequency hopping systems, 3 sets of simulations were carried out. First, the SFH system was simulated in a Rayleigh fading environment for a single user using 64 hopping frequencies. Following the equal bandwidth constraint, this is equivalent to a SF of 64 in DSSS system. BER performance of a SFH system with 64 hopping frequencies is compared with DSSS system of SF=64 in Figure 5.5. It is evident that the performance of the DSSS system under Rayleigh fading is far better than the SFH system for the same processing gain in a single user system. A second set of SFH system performance results are based on multi-user interference analysis. All the users use two frequencies from a total of 64 frequencies used by the desired user. The SFH system was simulated for a hopping rate equal to 8 bits/hop and 64 hopping frequencies with a varying number of users. Performance results are shown in Figure 5.6. With only two users in the system,

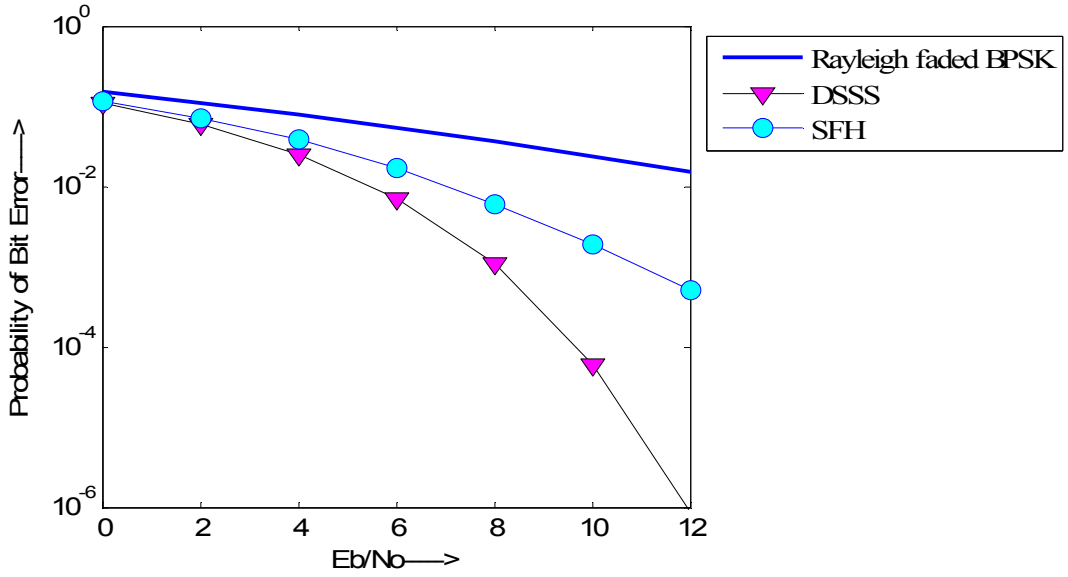

Figure 5.5 : Comparison of DSSS and SFH Performance in a Rayleigh Fading Environment.

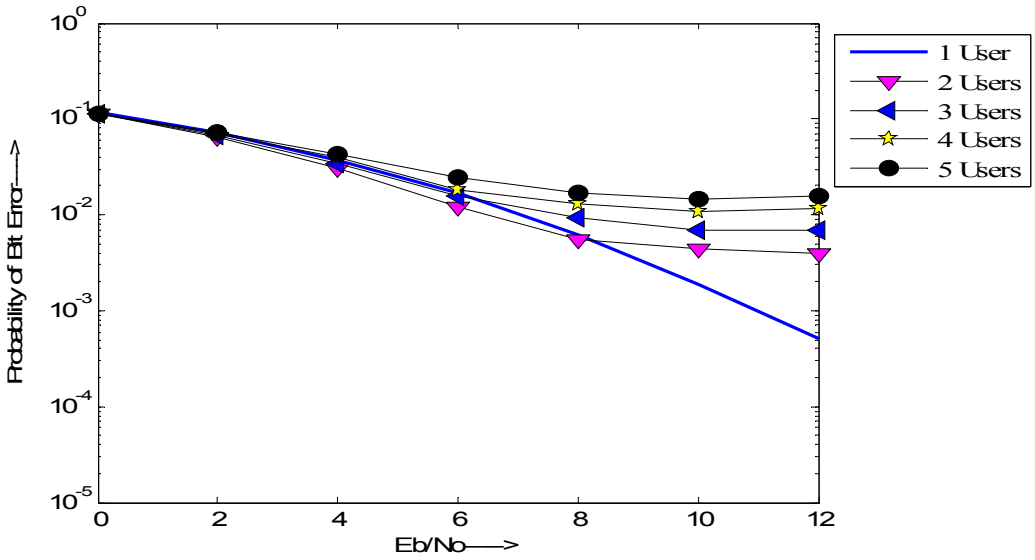

Figure 5.6 : SFH Performance in a Multi-user Interference and Rayleigh Fading Environment.

the performance curve showed a steady decrease in BER until an E_b / N_o of 8, after which the curve becomes asymptotic slightly below 10^{-2}. As the number of users increased from 1 to 5, the performance followed the curve for 2 users, with degrading performance for increasing number of users. As compared to a DSSS system, the degradation in performance for a particular number of users is greater in a SFH system. Better performance may be achieved for SFH systems if efficient frequency hopping patterns are used along with error correction coding.

A possible explanation for this behavior can be provided by the number of hits that the desired user experiences from other users. As explained before, all the users operate in a specific portion of spread bandwidth. In a two user system with no Rayleigh fading, whether the desired bit will be received in error or not will depend on the interferer's randomly generated bit. For example, if the desired bit is a +1 and the interferer's bit is also +1, then a hit will not result in error since the received signal will be well above threshold. On the other hand, if the interferer's bit is -1 then the desired user's bit will experience decision error. The situation gets more complicated when Rayleigh fading is introduced to the system. However, for the slow fading channel assumed in this analysis, the channel impulse response can be assumed constant over the symbol duration. Thus the performance under multi-user interference can be visualized as a direct function of number of hits and the summing of random user bits. The number of hits experienced by the desired user increases as the number of users increase, but the summing of randomly generated interferer data result in almost the same number of bit errors.

A third set of results were obtained for selected hopping frequencies in a multi-user interference environment. This is equivalent to DSSS analysis for various spreading factors. Performance results are presented in Figure 5.7 for a system with 5 users and a hopping rate of 4 bits/hop. The results are similar to the DSSS system in the sense that performance improvement is observed as the spreading factor increases. However, multi user performance curves become asymptotic after E_b / N_o=8 for a system with 128 hopping frequencies. SFH performance with just 5 users is poorer than DSSS

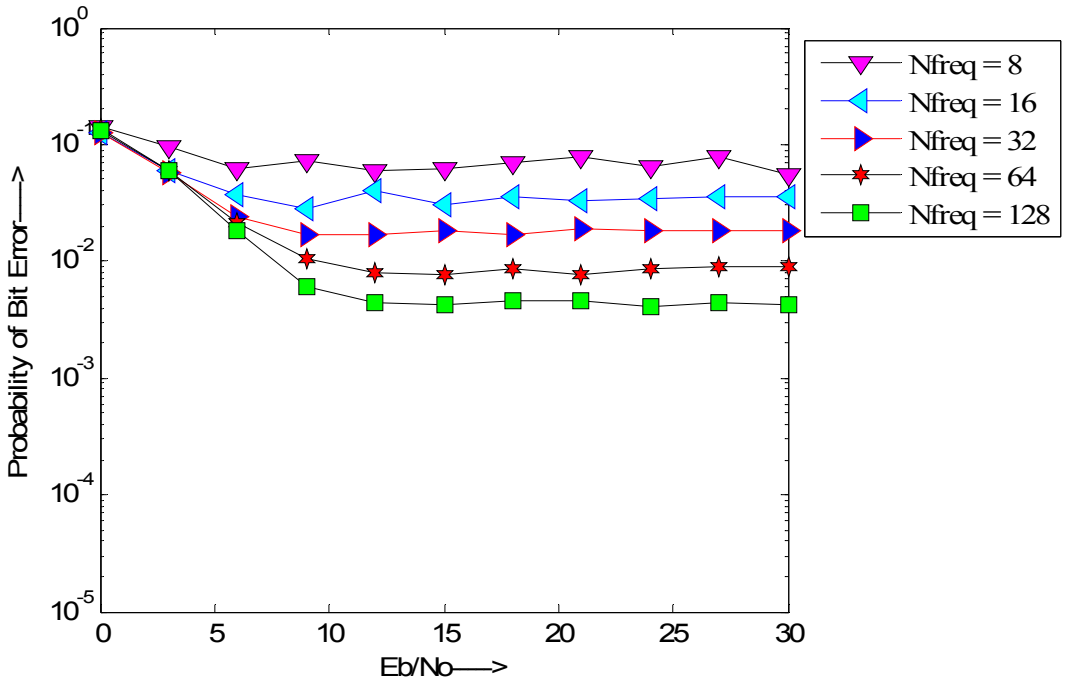

Figure 5.7 : SFH Performance for 5 Users with Rayleigh Fading

performance with 10 users. Thus, it is clear that a SFH system needs either diversity, error control coding, or both in order to lower the BER curve to acceptable values.

5.3 Fast Frequency Hopping: Performance Results

For fast frequency hopping systems, one period of code sequence is used per data bit and PN chips are equally divided for each dwell interval in a bit. Thus, to implement an even number of hops in a bit, we need an even number of chips in one period of code sequence. But even such a code should exhibit the same characteristics as the odd chipped PN sequence. Two types of code were studied. One consisted of an odd number of chips using the usual LFSR implementation, and the second featured an even number of chips by adding a randomly generated chip to the LFSR generated sequence. These two types of code were used to simulate a DSSS system in a Rayleigh fading

environment. Results are shown in Figure 5.8. It is important to note that performance results for a DSSS system with a PN sequence of length $2^N - 1$ (for example 63 when N = 6) are very close to the one with length equal to 2^N (length of 64 chips/bit when N = 6). Results in Figure 5.8 provide a basis for using such modified PN codes in hybrid systems with an even number of dwell intervals. Since an even chipped PN code does not result in substantial performance degradation, it can be safely used for comparison purposes.

Autocorrelation functions for even and odd chipped code were also analyzed. Conventional LFSR output has 1023 chips and provides zero autocorrelation at all time delays except 0, where the autocorrelation function is 1. Two types of even chipped PN sequences were studied: one with a random chip added to the 1023 chip ($SF = 2^{10}$) LFSR output, and another obtained by truncating the 2047 chipped ($SF = 2^{11}$) LFSR sequence. Autocorrelation functions are plotted in Figure 5.9. As is evident from Figure 5.9, both even sequences provide unit autocorrelation at 0 time delay. The mean square errors for even sequences at non zero delays and was found to be 0.0013 and 0.0017 for

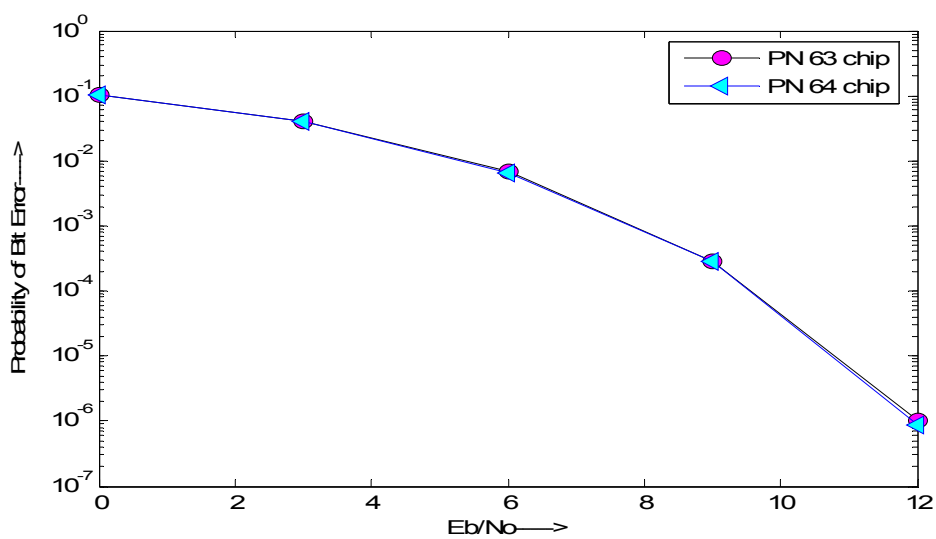

Figure 5.8 : Rayleigh Fading Performance of a DSSS System for Even and Odd PN Sequences

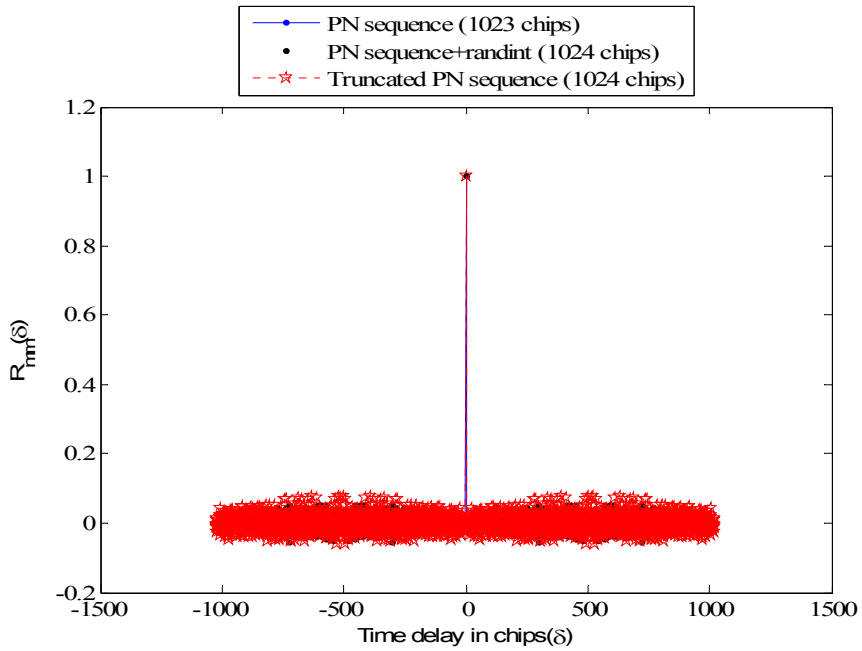

(a)

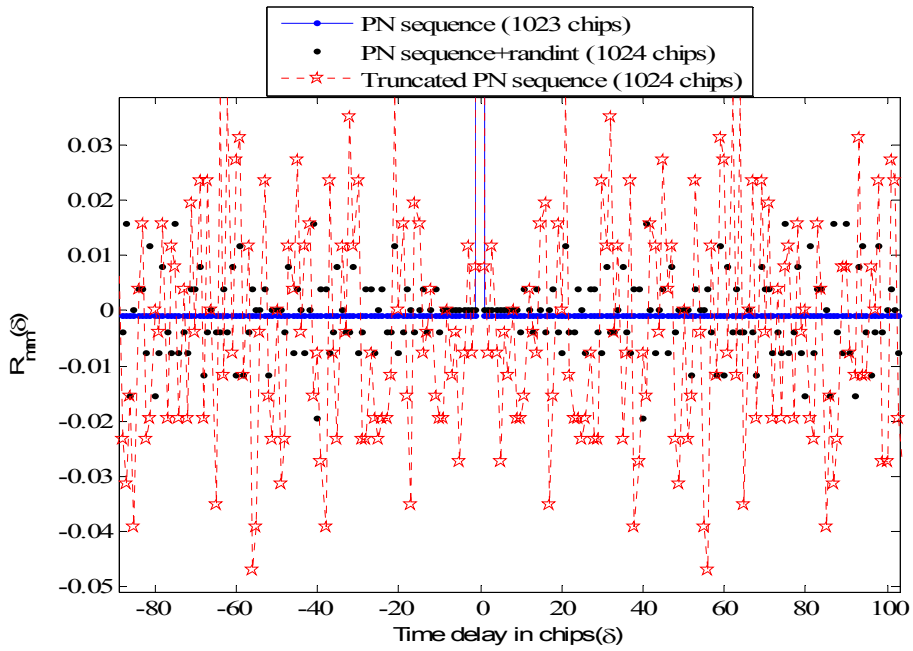

(b)

Figure 5.9 : (a) Autocorrelation Function for Even and Odd Chipped PN Codes. (b) Magnified Autocorrelation Function.

the added and truncated sequences respectively. Thus results from 5.8 and 5.9 provide validation for using even PN sequences for hybrid systems discussed later in the Chapter.

The Rayleigh fading performance of FFH systems with hopping rate equal to 4 hops/bit and 64 hopping frequencies is plotted along with SFH and DSSS systems in Figure 5.10. The FFH system outperforms the SFH system but is inferior to the DSSS system. The FFH system's better performance can be explained by its inherent diversity, which results in reduced bit error.

Performance of the FFH system for different numbers of users in a Rayleigh fading environment is plotted in Figure 5.11. A hopping rate of 8 hops/bit and 64 hopping frequencies were used. As with Rayleigh fading performance, FFH multiuser performance is better than SFH but inferior to DSSS performance. A second difference between SFH and FFH performance curves is that FFH performance

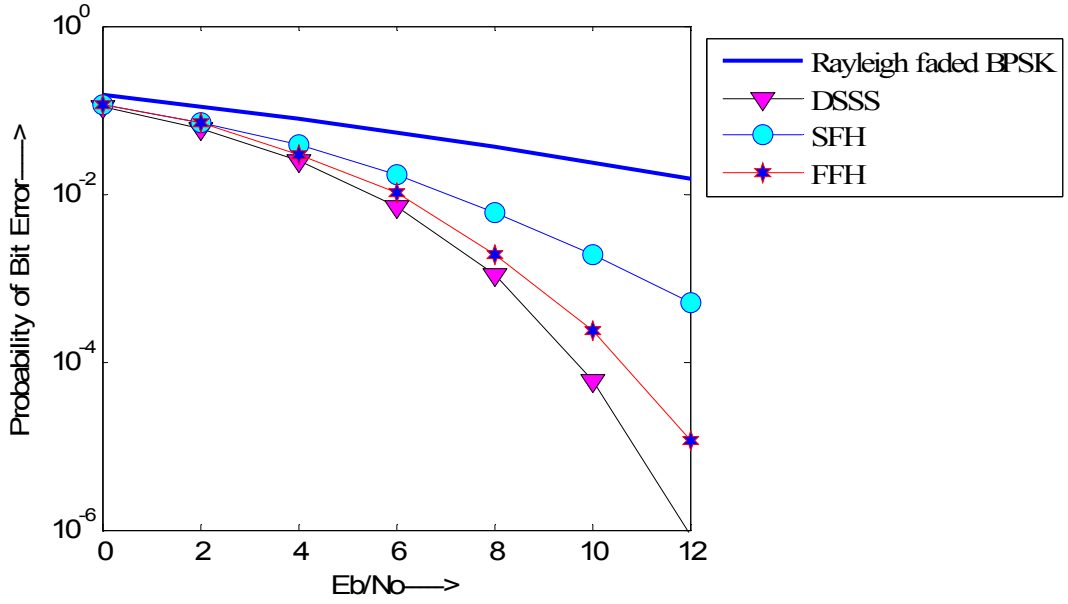

Figure 5.10 : Comparison of SFH, FFH and DSSS Systems under Rayleigh Fading

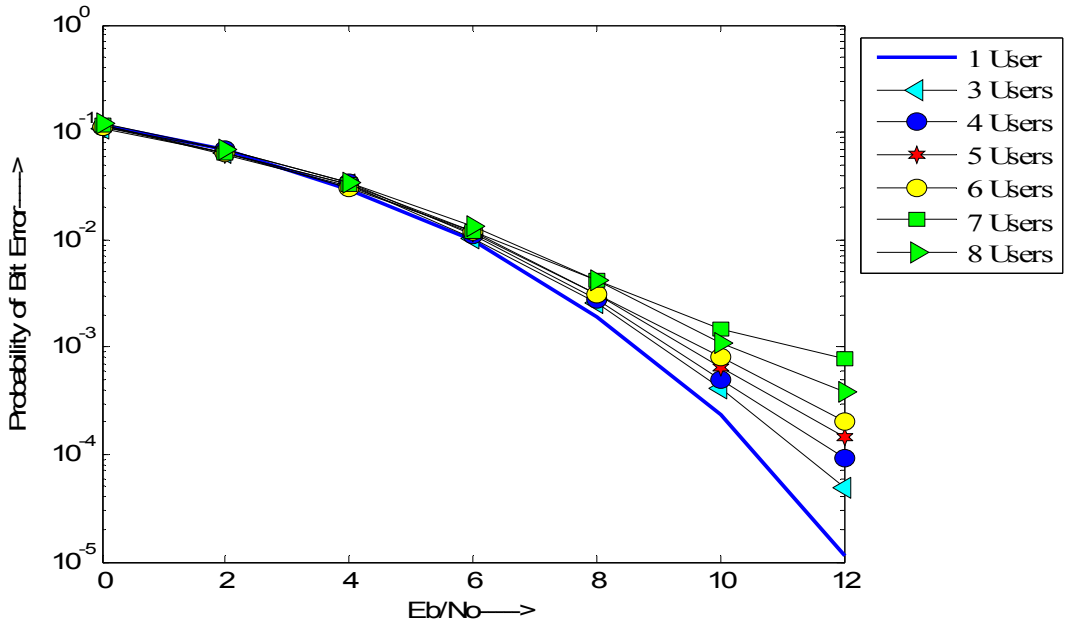

Figure 5.11 : Performance of FFH System for Varying Number of Users

deteriorates gradually with an increasing number of users, while SFH performance displayed unacceptable BER even with 2 users. Another performance result for the FFH system is the analysis of performance for different hopping rates. Higher number of dwells within a bit implies more diversity and thus improved performance. Performance of the FFH system with 5 users and 64 hopping frequencies is plotted in Figure 5.12 for hopping rates equal to 2, 4 and 8 hops per bit. For lower E_b / N_o values below 4, the BER curve doesn't differ much for different dwell times. However, at higher SNR values, the clear advantage of using higher hopping rate or smaller dwell time is observed. Performance increases steadily from 2 hops per bit to 8 hops per bit. The fast frequency hopping system is next simulated for 5 users in the system. All the interferers use two frequencies from a total of 64 employed by the desired user. A set of performance curves was obtained with a constant hopping rate of 8 hops per bit and varying number of hopping frequencies. Results are plotted in Figure 5.13. It can be seen that as the number of hopping frequencies is increased from 8 to 64,

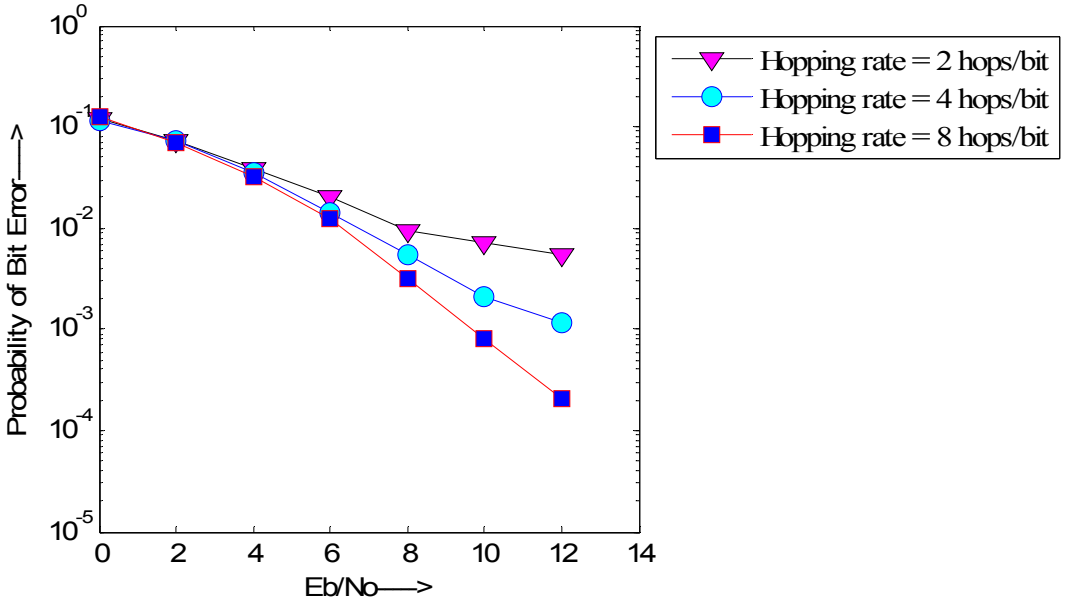

Figure 5.12 : Performance of FFH System for Different Hopping Rates

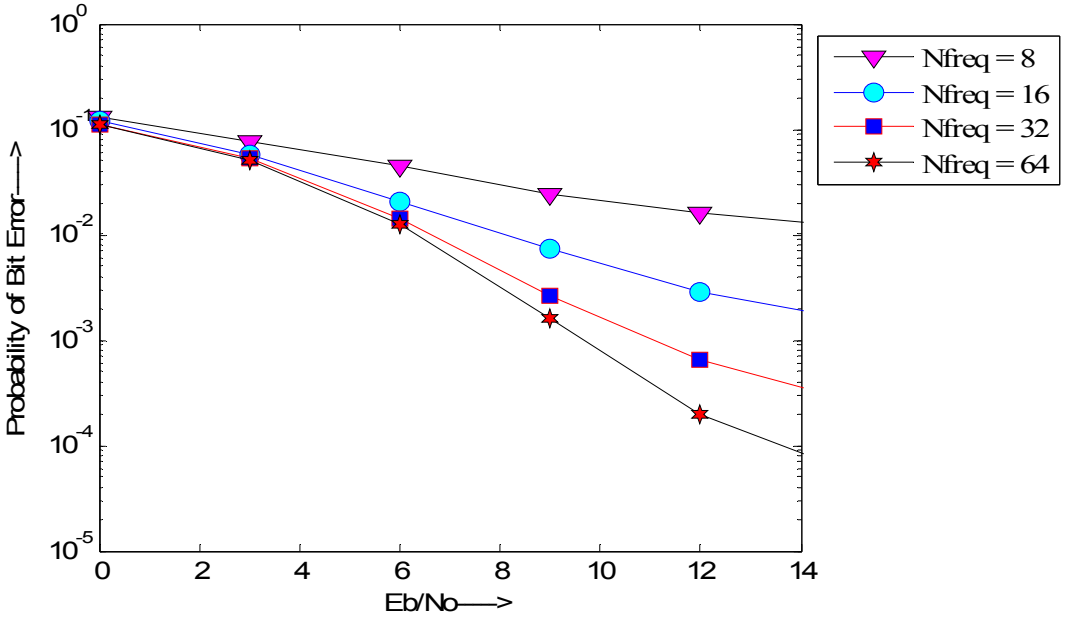

Figure 5.13 : Performance of FFH System with 5 Users and Varying Number of Hopping Frequencies

the performance gradually improves. Similar results were obtained for SFH and DSSS systems in previous sections. An increased number of hopping frequencies provides a higher processing gain. The probability of hits from users decreases as the desired user's frequency span increases. From all the performance results analyzed thus far, it is evident that under the worst case Rayleigh fading environment and multiuser interference, FFH systems perform better than SFH systems. Hybrid DS/SFH and hybrid DS/FFH systems are analyzed in next two sections. The spreading factor for a hybrid system depends on the both the number of hopping frequencies used and the length of the PN sequence.

5.4 Hybrid DS/SFH: Performance Results

A hybrid DS/SFH system was simulated for a single user subject to a Rayleigh fading environment. Results are compared with DSSS, SFH and FFH, as shown in Figure 5.14. A hybrid slow hopping system performs better than the slow frequency hopping system but is inferior to both DSSS and fast hopping systems.

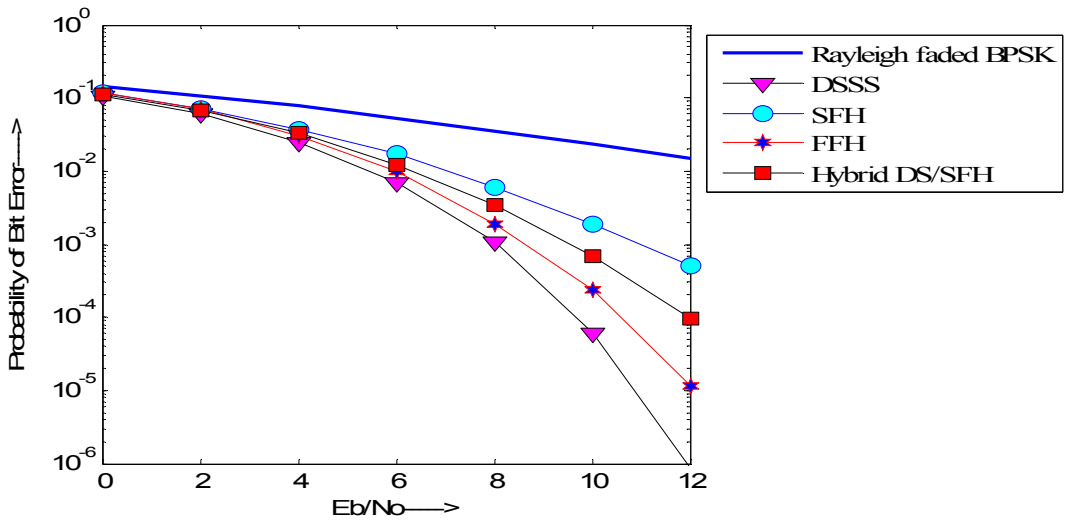

Figure 5.14 : DSSS, SFH, FFH and Hybrid DS/SFH under Rayleigh Fading

There is a definite advantage in introducing a hybrid character into a SFH system. The hybrid system was simulated for 8 hopping frequencies and an even PN sequence of length 8, giving an overall spreading factor of 64. For a slow frequency hopping system, an odd PN sequence could be used since we do not divide portions of a single bit into dwell intervals. Instead, one dwell interval lasts for several bit periods. But in fast hopping systems, even PN sequences are used for reasons explained previously. In order to compare SFH and FFH systems, even PN sequences are used for the hybrid DS/SFH system. The hopping rate used was 8 bits/hop. For comparison purposes, DSSS was simulated with SF=64, FFH with 8 hops/bit, and SFH with 8 bits/hop and 64 hopping frequencies. A hybrid DS/SFH system was also simulated for a varying number of hopping frequencies N_f and PN sequence SF, with total spreading being equal to 64. Results are presented in Figure 5.15. It is clear that increased SF provides better performance. The performance of hybrid DS/SFH systems in a multiuser interference environment is plotted in Figure 5.16 for different numbers of users.

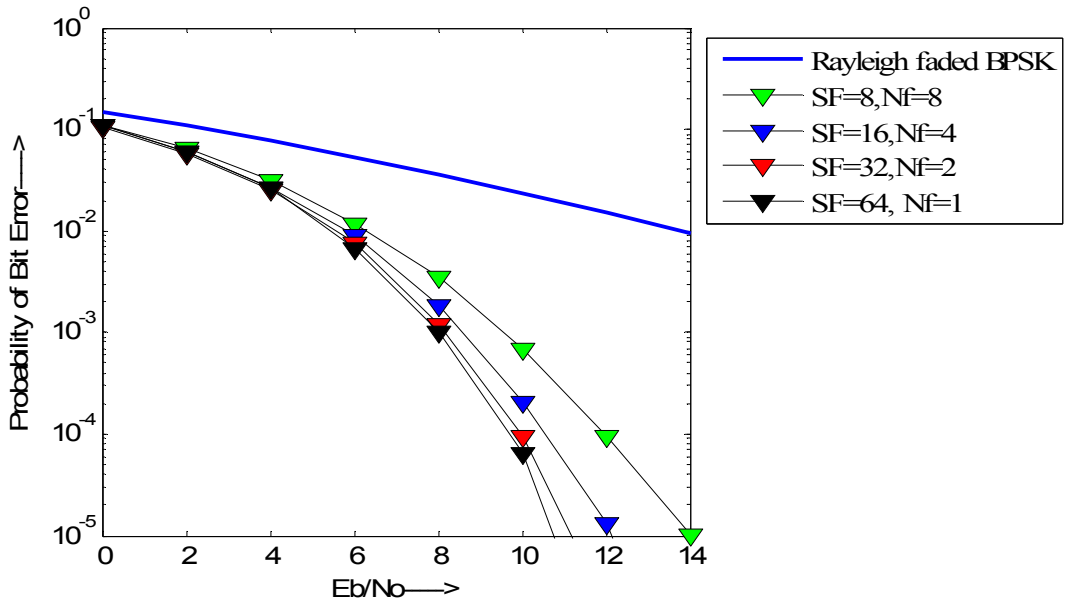

Figure 5.15 : Hybrid DS/SFH System for Varying N_f and SF under Rayleigh Fading

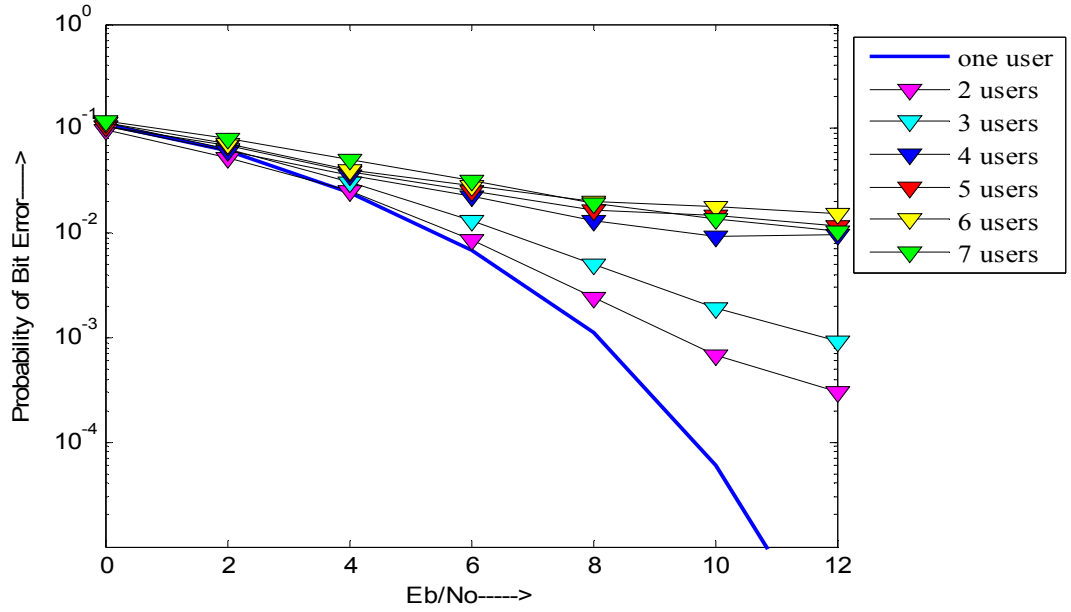

Figure 5.16 : Performance of Hybrid DS/SFH System for Varying Number of Users

The simulation results are obtained for a hopping rate of 8bits/hop with 4 hopping frequencies and a PN sequence of length 16, thus giving a total spreading of 64. The performance deteriorates steadily as the number of users increase, however, as compared to multiuser performance of SFH system in Figure 5.6, an acceptable voice BER can be obtained for 2 users in a hybrid DS/SFH system. Unlike the SFH system, the multiuser performance of a hybrid system depends both on the number of hits experienced and the correlation between the interferer's and desired user's PN sequences.

Another interesting analysis pertaining to a hybrid system is the effect of changing the number of hopping frequencies N_f and the length of the PN sequence (indicated by its SF), while maintaining a total spreading factor of 64. The results are presented in Figure 5.17 for four different cases, with the length of the PN sequence increasing steadily from 8 to 64 chips with 5 users in the system. With $N_f = 1$ and 64 hopping frequencies, the system represents a pure DSSS system. As shown in Figure 5.16, the performance of a hybrid DS/SFH system improves steadily as the length of the PN sequence increases.

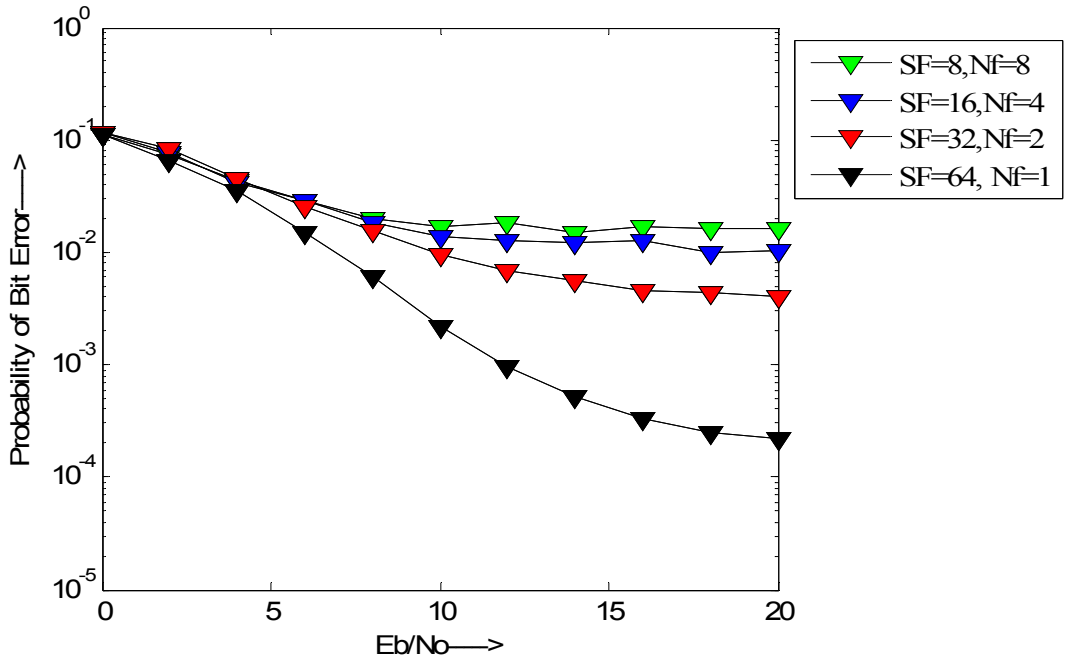

T

Figure 5.17 : Hybrid DS/SFH System for Varying N_f and SF for 5 Users

This can be easily explained by considering the fact that a higher proportion of DS components results in increased interference suppression and thus improves performance. Figure 5.7 in Section 5.2 indicated that for a SFH system, the higher the number of hopping frequencies, the better the performance. But a higher number of hopping frequencies may not be available all the time, since frequency resources are limited. Also, some of the frequencies might result in interference with other coexisting systems. In such circumstances, a hybrid DS/SFH system can be used with a lower number of hopping frequencies, and still provide the same performance as a SFH system. At this point, it can be safely predicted that a hybrid DS/FFH would perform better than a hybrid DS/SFH system, since we have already demonstrated that a FFH system exhibits better performance than a SFH system. A final set of results are presented next for a hybrid DS/FFH system.

5.5 Hybrid DS/FFH: Performance Results

The performance of a hybrid DS/FFH system is compared in Figure 5.18 with other systems subject to Rayleigh fading. A DSSS system was simulated for SF=64 , SFH with 64 hopping frequencies and 8 bits/hop, and FFH with 64 hopping frequencies and 8 hops/bit. Hybrid DS/SFH and hybrid DS/FFH were simulated for 8 hopping frequencies with an 8-chipped PN sequence. It can be observed that the hybrid DS/FFH system performs better than both hybrid DS/SFH and SFH systems, but is inferior to FFH and DSSS systems. Next a hybrid DS/FFH system was simulated for different values of N_f and SF. Results are plotted in Figure 5.19. As with the hybrid DS/SFH system, the hybrid fast frequency hopping system also shows improved performance with increasing SF. The system was simulated for 8 hops/bit. Another set of results for hybrid DS/FFH

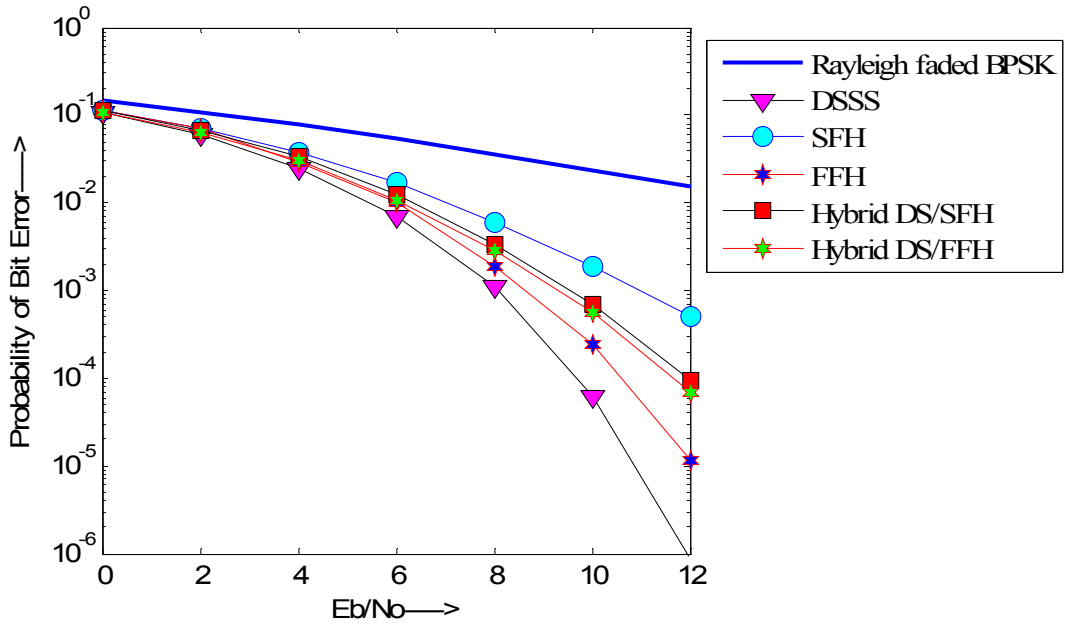

Figure 5.18 : Comparison of Hybrid DS/FFH with Other Systems under Rayleigh Fading

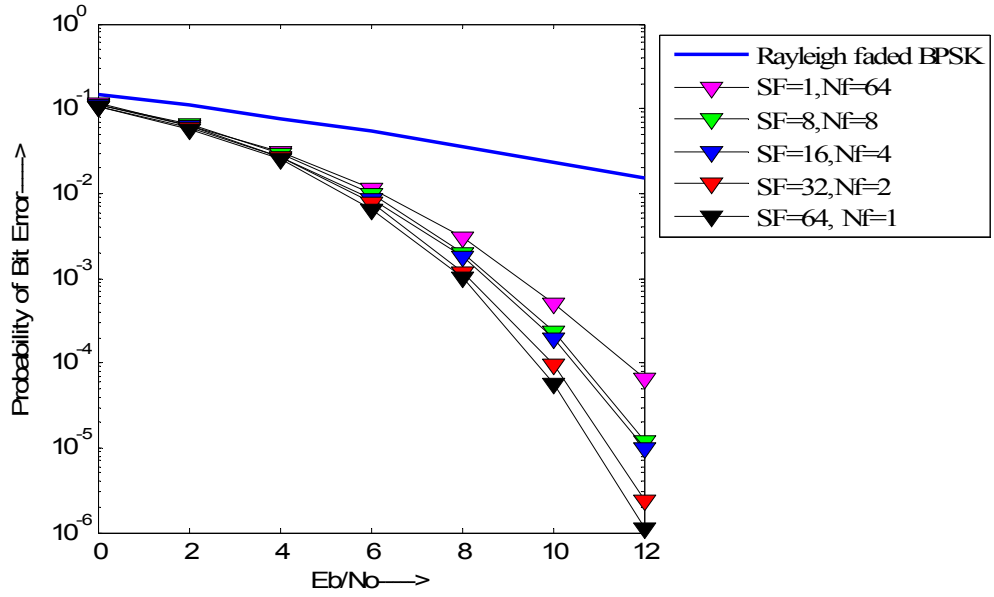

Figure 5.19 : Hybrid DS/FFH System for Varying N_f and SF under Rayleigh Fading

was obtained in the presence of multiuser interference. Simulation results are presented in Figure 5.20. This system was simulated for a hopping rate of 8 hops/bit with 4 hopping frequencies, and a PN sequence of length 16, thus giving a total spreading of 64. The performance of this system deteriorates steadily as the number of users increase. Finally, performance under multiuser interference for varying N_f and SF is presented in Figure 5.21 for 5 users. A comparison of slow and fast hopping systems with respect to multiuser interference will be analyzed in the next section.

5.6 Comparative Analysis of Hybrid Slow and Fast Hopping Systems

Hybrid slow and fast hopping systems are compared for multi-user interference performance subject to Rayleigh fading.

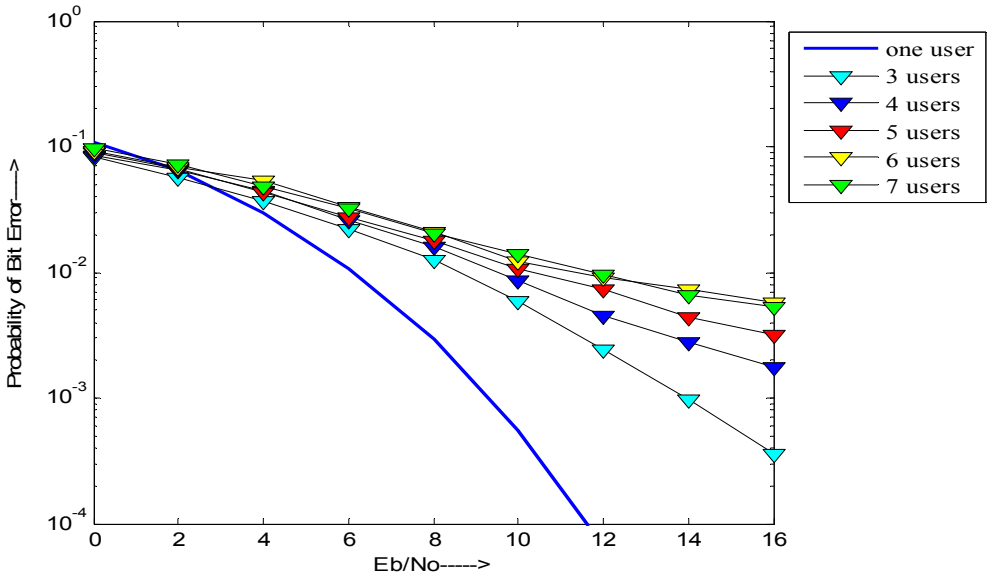

Figure 5.20 : Performance of Hybrid DS/FFH System for Varying Number of Users

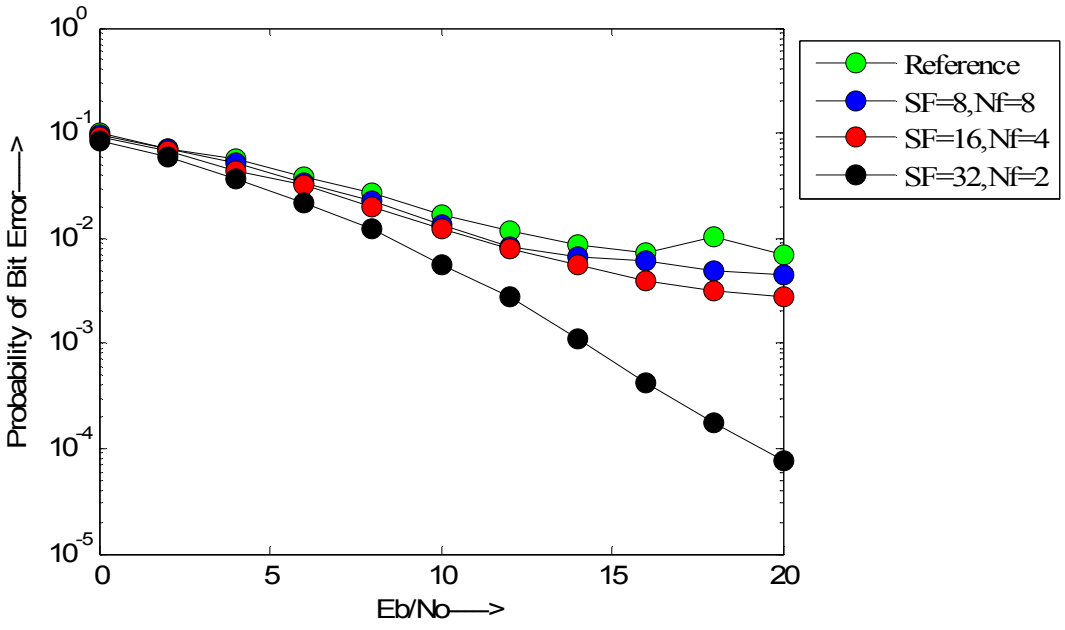

Figure 5.21: Performance of Hybrid DS/FFH System for Varying N_f and SF under Rayleigh fading and 5 Users

A set of results is plotted for 1, 2 and, 7 users in the system for 4 hopping frequencies and SF=16 in Figure 5.22. Performance of hybrid DS/FFH is slightly better than hybrid DS/SFH for a single user system; however, when there are two users, then DS/FFH system exhibits much improvement in performance. For 7 users in the system, the performance remains almost the same. Another comparison pertaining to the variation of N_f and SF is presented in Figure 5.23. It can be clearly seen that for all combinations of N_f and SF studied, the hybrid DS/FFH system provides slightly better performance than hybrid DS/SFH system. The system for Figure 5.23 was simulated for hopping rate of 8 hops/bit (for hybrid DS/FFH) and 8 bits/hop (for hybrid DS/SFH).

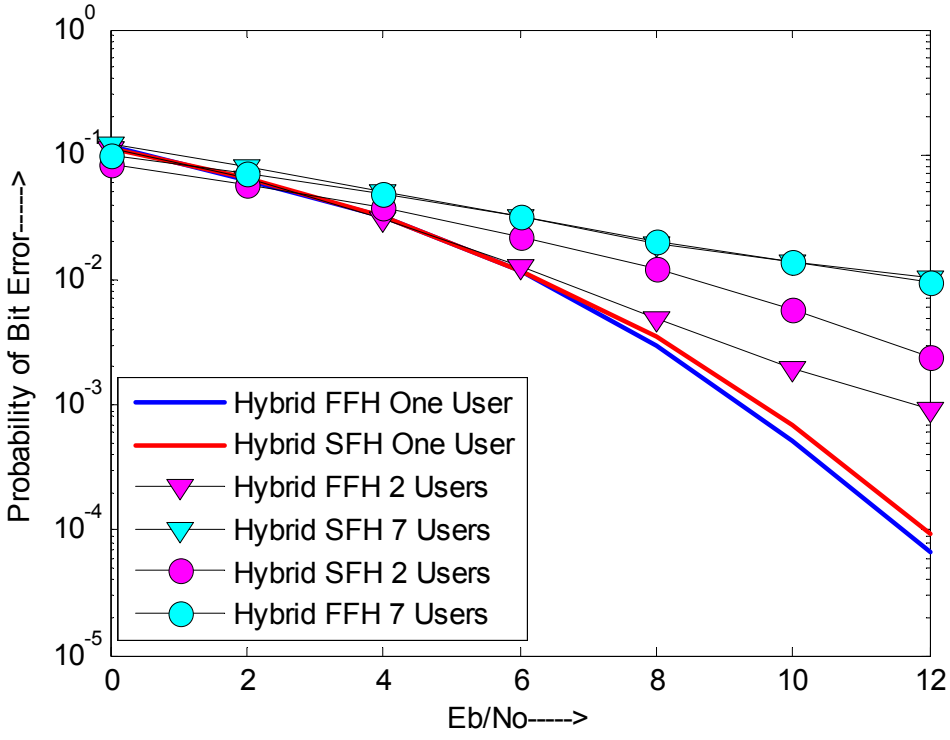

Figure 5.22 : Comparison of Hybrid Slow and Fast Hopping under Multi-User Interference

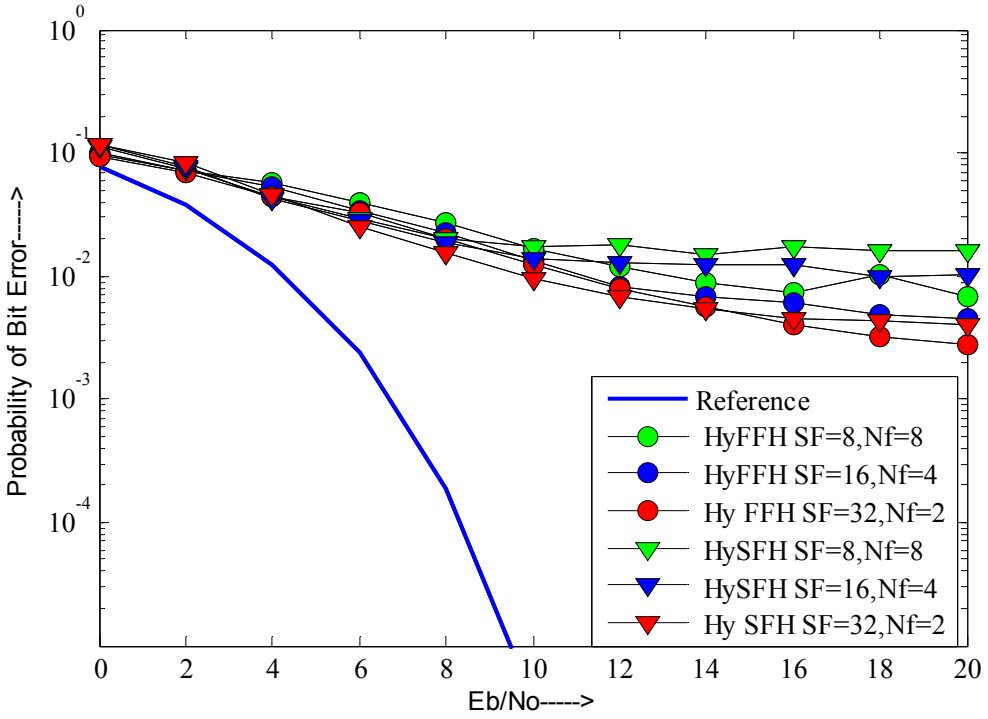

Figure 5.23 : Comparison of Hybrid Slow and Fast Hopping for Varying N_f and SF

Chapter 6

Conclusions and Future Work

This thesis has established the preliminary performance of a hybrid DS/FFH system subject to Rayleigh fading and a multiuser interference environment. The various assumptions involved in this work were derived from a variety of references. It was realized that hybrid systems, particularly hybrid DS/FFH systems, need further research. To the best of our knowledge, hybrid DS/FFH systems have not been analyzed in the literature for performance subject to Rayleigh fading and multiuser interference. While performing this research for the hybrid DS/FFH system, a need to compare hybrid DS/FFH systems with other systems was identified. Through this work, we have been able to understand the performance status of hybrid DS/FFH modulation among other spread spectrum techniques; however, many aspects of hybrid DS/FFH systems still need further attention. In this chapter, this thesis work will be summarized and recommendations will be provided for future research on performance of spread spectrum communications, especially hybrid DS/FH systems.

The main contribution of this research is comparison of hybrid DS/FFH systems to other spread spectrum techniques i.e. Direct Sequence Spread Spectrum (DSSS), Frequency Hopping Spread Spectrum (FHSS) with both fast (FFH) and slow hopping (SFH) and hybrid DS/SFH systems. All the SS systems were simulated subject to Rayleigh fading and a multiuser interference environment. Error correction coding and diversity were not employed for the sake of simplicity. Frequency hopping patterns were simply derived from PN sequences generated using Linear Feedback Shift Register (LFSR). Low pass envelope models were used to generate BER curves for various systems. All the systems were assumed to operate among similar kind of interferers.

Performance of the DSSS system improved steadily under a multiuser interference environment and Rayleigh fading as the spreading factor increased. Similar results were obtained for slow and fast frequency hopping. The probability of bit error decreased with increasing number of hopping frequencies. Another important result pertaining to hybrid DS/FH systems is that the performance steadily improved with increasing SF (DS component of the hybrid system) and decreasing number of hopping frequencies N_f for both hybrid DS/SFH and hybrid DS/FFH systems. Thus higher SF implies better performance in both DSSS and hybrid DS/FH systems under multi user interference. This might be the result of using efficient PN codes for the DSSS system. The frequency hopping patterns were derived from PN codes by combining the output chips to generate a frequency code word. A group of such frequency words constituted a hopping pattern. Analysis of hybrid DS/FH systems with established hopping patterns in the literature such as by Maric [49], Cassereau et al. [50], Yang et al. [51], Han et al.[52], Mott[53], Novostad[54] and Bellagarda et al. [55] might be an interesting topic for future research.

As is evident from BER performance curves in Chapter 5, a hybrid DS/FFH system performs better than SFH and hybrid DS/SFH systems in a flat Rayleigh fading channel. However, the DSSS system outperforms both hybrid DS/FFH and FFH. Thus, Rayleigh fading results also indicate that there is a need to evaluate hybrid DS/FFH systems with

efficient hopping patterns. Also, performance analysis can be done by modeling frequency selective fading, instead of flat fading and comparison of hybrid DS/FFH systems with other systems can be carried out. The performance of the fast frequency hopping system improved with increasing number of dwell intervals per bit. Similarly, the hybrid DS/FFH system can also be simulated to analyze its performance under different dwell intervals.

Under a multiuser interference environment, the hybrid fast frequency hopping system outperformed hybrid slow frequency hopping among similar users. More extensive analysis of hybrid systems may be carried out by interference modeling in a way that would include different types of interferers and varying SF and N_f values. For example, a hybrid system may be simulated under DSSS, SFH or FFH interference.

Jamming performance of hybrid DS/FFH systems can be another research initiative. A hybrid DS/FFH system may be simulated for different jammer strategies. Also, flexibility of hybrid systems can be exploited by switching to different frequency hopping sets. For instance, unlike a pure frequency hopping system, a hybrid system uses fewer frequencies with a PN code to provide the same overall spreading. Thus the additional frequencies could be sorted and assigned to different frequency sets in a way that would result in minimal hit occurrences. Next, a hybrid system could be simulated by randomly switching from one frequency set to another. Such an arrangement might provide improved jamming performance.

Bibliography

1. Tse, David, and Pramod Viswanath. Fundamentals of Wireless Communications Cambridge University Press, 2005.

2. Viterbi, Andrew J. CDMA: Principles of Spread Spectrum Communication, Addison-Wesley Publishing Company, 1995.

3. Roberts, Randy. "The ABCs of Spread Spectrum - A Tutorial", available at http://sss-mag.com/ss.html#tutorial.

4. Rappaport, Theodore S. Wireless Communications: Principles and Practice, Prentice Hall, 2002.

5. Goldsmith, Andrea. Wireless Communications, Cambridge University Press, 2005.

6. Vriendt, J. D., P. Laine, C. Lerouge, and X. Xu, "Mobile network evolution: a revolution on the move," IEEE Communication Magazine April 2002, Page(s) 104-111.

7. Vaughan-Nichols, S. J. "Achieving wireless broadband with WiMax," IEEE Computer, Vol. 37, June 2004, Page(s) 10-13.

8. Cherry, S. M. "WiMax and Wi-Fi: Separate and Unequal," IEEE Spectrum, Vol. 41, March 2004, Page 16.

9. Poole, I. "What exactly is … Zigbee?" IEEE Communication Engineer, August-September 2004, Page(s) 44- 45.

10. Grammer, Jeff. "Zigbee starts to buzz" IEE Review Volume 50, Issue 11, November 2004, Page(s) 17-17.

11. Evans-Pughe, Chris. "Buzzzz zzz [Zigbee wireless standard]", IEE Review Volume 49, Issue 3, March 2003, Page(s) 28-31.

12. Yang, L. and G.B. Giannakis, "Ultra-wideband communications: an idea whose time has come," IEEE Signal Processing Magazine, Vol. 21, Issue 6, November 2004, Page(s) 26 - 54.

13. Porcino, D. and W. Hirt, "Ultra-wideband radio technology: potential and challenges ahead," IEEE Communication Magazine, Vol. 41, Issue 7, July 2003, Page(s) 66 - 74.

14. Hassan, Amer A., John E. Hershey and Gary J. Saulnier, Perspectives in Spread Spectrum, Kluwer Academic Publishers, 1998.

15. Kohno, Ryuji, Reuven Meidan, and Laurence B. Milstein. "Spread Spectrum Access Methods for Wireless Communications", IEEE Communication Magazine, Vol. 33, Issue 1, January 1995, Page(s) 58-67.

16. Dixon, R. C. Spread Spectrum Systems, John Wiley and Sons, 1984.

17. Proakis, John G. Digital Communications, 4th Edition, McGraw Hill Publishers, 2001.

18. Sklar, Bernard. Digital Communications: Fundamentals and Applications, Prentice Hall, 1988.

19. Jachimczyk, Witold. *"*Spread Spectrum Tutorial*",* Available at http://webpages.charter.net/witek/.

20. Scholtz, Robert A. "The Origins of Spread-Spectrum Communications", IEEE Transactions on Communications, Volume 30, Issue 5, Part 2, May 1982, Page(s) 822-854.

21. Gass, H. Jr. and Michael B. Pursley. " A Comparison of Slow-Frequency-Hop and Direct-Sequence Spread-Spectrum systems for different Multi-path Delay Profiles", MILCOM 97 Proceedings, Volume 2, November 1997, Page(s) 812 – 816.

22. Cherubini, Giovanni, and Laurence B. Milstein. "Performance Analysis of Both Hybrid and Frequency-Hopped Phase-Coherent Spread- Spectrum Systems Part I: A Hybrid DS/FH System", IEEE Transactions on Communications, Volume 37, No. 6, June 1989.

23. Cherubini, Giovanni and Laurence B. Milstein. "Performance Analysis of Both Hybrid and Frequency-Hopped Phase-Coherent Spread- Spectrum Systems Part II: An FH System", IEEE Transactions on Communications, Vol.31, No. 6, June 1989.

24. Sarkar, Nurul. "Wireless Data Communications Systems: Technologies, Challenges and Future Trends", Auckland University of Technology, available at http://site.tekotago.ac.nz/staticdata/papers02/papers/sarkar365.pdf.

25. Keller, M. "A comprehensive simulation approach to study FH in two GSM systems regarding the physical layer level and the system level", IEEE 47th Vehicular Technology Conference, Volume 3, May 1997, Page(s) 1852-1856.

26. Fitton, M. P., A.R. Nix, and M.A. Beach. "Propagation Aspects of Frequency-Hopping Spread Spectra." IEE Proceedings on Microwaves, Antennas and Propagation, Volume 145, Issue 3, June 1998, Page(s) 249-255.

27. Tsai, Ywh-Ren., and Jin-Fu Chang. " Using Frequency Hopping Spread Spectrum Technique to Combat Multipath Interference in a Multi accessing Environment", IEEE Transactions on Vehicular Technology, Vol. 43, No. 2, May 1994.

28. Geraniotis, E. A. "Non-coherent Hybrid DS-SFH Spread-Spectrum Multiple-Access Communications", IEEE Transactions on Communications, Vol. Com-34, No. 9, September 1986.

29. Sadiq, L., and A. Hamid Aghvami. "Performance of an asynchronous hybrid spread spectrum system in the presence of interference, Ricean fading and AWGN", IEE Proceedings on Communications, Speech and Vision- I, Volume 138, Issue 2, April 1991, Page(s) 117-122.

30. Geraniotis, E. A. "Coherent Hybrid DS-SFH Spread-Spectrum Multiple-Access Communications", IEEE Journal on Selected Areas in Communications, Volume 3, Issue 5, September 1985, Page(s) 695 – 705.

31. Pursley, M. B. "Performance evaluation for phase-coded spread-spectrum multiple-access communications- Part I: System analysis," IEEE Transactions on Communications Volume 25, Issue 8, August 1977, Page(s) 795 - 799.

32. Geraniotis, E. A. and M. B. Pursley. "Error probabilities for slow frequency hopped spread spectrum multiple access communications over fading channels", IEEE Transactions on Communications Volume 30, Issue 5, Part 2, May 1982, Page(s) 996 – 1009.

33. Geraniotis, E. A. "Performance of non-coherent direct-sequence spread- spectrum multiple-access communications", IEEE Journal on Selected Areas in Communications, Volume 3, Issue 5, September 1985, Page(s) 687 – 694.

34. Geraniotis, E. A. "Coherent hybrid DS-SFH spread-spectrum multiple- access communications", IEEE Journal on Selected Areas in Communications, Volume 3, Issue 5, September 1985 , Page(s) 695 – 705.

35. Geraniotis, E. A., and M. B. Pursley. "Error probabilities for direct sequence spread spectrum multiple access communications- Part II: Approximations", IEEE Transactions on Communications Volume 30, Issue 5, Part 2, May 1982, Page(s) 985-995.

36. Sadiq, L., and A. H. Aghvami. "Performance of a coded hybrid spread spectrum communication system in the presence of partial band noise and multiple access

interference", Military Communications Conference (MILCOM) San Diego, CA, 1988.

37. Simon, Marvin K., and Andreas Polydoros. "Coherent Detection of Frequency-Hopped Quadrature Modulations in the Presence of Jamming-Part I: QPSK and QASK Modulations", IEEE Transactions on Communications, Volume 29, Issue 11, November 1981, Page(s) 1644 – 1660.

38. Riddle, L. P. "Performance of a hybrid spread spectrum system against follower jamming", Military Communications Conference, 1990 (MILCOM '90), IEEE Conference Record, 'A New Era', Volume 1, 1990, Page(s) 420 - 424.

39. Geraniotis, E. A. and B. Ghaffari. "Broadcast Capability of Direct Sequence and Hybrid Spread Spectrum", IEEE Journal on Selected Areas in Communications Volume 8, Issue 4, May 1990, Page(s) 489 – 502.

40. Muammar, R. "Performance evaluation of a hybrid spread spectrum system in a hostile land mobile radio channel", IEEE 41st Vehicular Technology Conference, 'Gateway to the Future Technology in Motion', 19-22 May 1991, Page(s) 108 – 113.

41. Gangadhar, R. M., and P. P. Gandhi, "Performance characteristics of QPSK and MSK DS/FH hybrid CDMA systems in Rayleigh fading", Twenty-Eighth Asilomar Conference on Signals, Systems and Computers, Volume 1 ,31 October-2 November, 1994, Page(s) 446 – 449.

42. Byun, WooSub, SeongJoon Baek, and Koeng-Mo Sung. "Probability of Error for a Hybrid DS/SFH Spread-Spectrum System over a Nakagami Fading Channel in the Presence of Multiple Tone Jamming", IEICE Transactions on Communications, Vol.E82-B No.10, 1999/10, Page(s) 1699-1701.

43. Vlachos, Theodore, and Evaggelos Geraniotis, "Performance Study of Hybrid Spread-Spectrum Random-Access Communications", IEEE Transactions on Communications, Volume 39, No. 6, June 1991, Page(s) 975-985.

44. Loh, Siew-Kee "Hybrid spread spectrum signal acquisition in the presence of worst case multitone jamming", MILCOM 97 Proceedings, Volume 1, November 1997, Page(s) 98-102.

45. Eldahab, M. Abou, M. A. Nassar, M. Fouad, and Abd El Monem Mokhtar, "Adaptive hybrid DS/SFH spread-spectrum multiple access communications", Proceedings of the Nineteenth National Radio Science Conference (NRSC'2002) (IEEE Cat. No.02EX567), 2002, Page(s) 389-396.

46. Eldahab, M. Abou, M. A. Nassar, M. Fouad, and Abd El Monem Mokhtar, "Coherent hybrid DS/SFH-SSMA micro and macro cellular communication", 11th IEEE Mediterranean Electro technical Conference (IEEE Cat. No.02CH37379), 2002, Page(s): 352-7.

47. Liu, Jicheng, Dingrong Shao, and Shujian, Li. "Research of hybrid DS/FH SS receiver based on coded-spread-spectrum", Proceedings of SPIE - The International Society for Optical Engineering, Volume 4911, 2002, Page(s) : 136-142.

48. Tranter, Shanmugan, Rappaport and Kosbar, Principles of Communication Systems Simulation with Wireless Applications, Prentice Hall PTR, 2004.

49. Maric, S.V. "Construction of optimal frequency hopping sequences for minimizing bit errors in selective fading channels characteristic to digital cellular systems", IEE Proceedings on Communications, Volume 142, Issue 4, August 1995, Page(s): 271 – 273.

50. Cassereau, P., and J. Jaffe. "Frequency hopping patterns for simultaneous multiple-beam sonar imaging", IEEE International Conference on Acoustics, Speech, and Signal Processing (ICASSP '87), Volume 12, April 1987 Page(s): 1704 – 1707.

51. Yang, Guu-Chang, and W. C. Kwong, "Design of frequency-hopping codes for mobile communication systems with multimedia services", IEEE Wireless Communications and Networking Conference (Cat. No.99TH8466), Volume 1 1999, pt. 1, Page(s): 442-6.

52. Han, Young Yearl, and Kyung Hee Lee, "Construction of new frequency-hopping sequence for FH/SSMA systems", IEEE 44th Vehicular Technology Conference (Cat. No.94CH3438-9), Volume.2, 1994, pt. 2, Page(s):1160-4.

53. Mott, J.H. "An algebraic method for the construction of families of sequences with good Hamming cross-correlation properties", Proceedings of the Twentieth Southeastern Symposium, March 20-22, 1988 Page(s):328 – 331.

54. Novosad, T. "Frequency hopping patterns based on finite geometry", IEEE Conference Record MILCOM '95, Volume 1, 5-8 November 1995, Page(s):325 – 329.

55. Bellegarda, J. R., and Titlebaum, E. L." The hit array: an analysis formalism for multiple access frequency hop coding", IEEE Transactions on Aerospace and Electronic Systems, Volume 27, Issue 1, January 1991, Page(s):30 – 39.

Vita

Yachna Sharma was born in New Delhi, India on March 12, 1977. She received her Bachelor of Science degree in Botany from Delhi University in May 1998. Intrigued by the fascinating world of wireless communications, she joined Mahila Institute of Technology (MIT), New Delhi, India and earned her Bachelor of Technology degree in Electronics and Communications in 2002. She joined the Electrical and Computer Engineering Department at the University of Tennessee, Knoxville in summer 2004 and received her M.S. degree in fall 2005. While at the University of Tennessee, she served as a graduate teaching assistant and worked at Oak Ridge National Laboratory (ORNL) as graduate research assistant. Her varied research interests include spread spectrum communications, software defined radio, digital signal processing and simulation of communication systems. Yachna is a student member of IEEE and a member of 'Phi Kappa Phi' honor society.

46. Eldahab, M. Abou, M. A. Nassar, M. Fouad, and Abd El Monem Mokhtar, "Coherent hybrid DS/SFH-SSMA micro and macro cellular communication", 11th IEEE Mediterranean Electro technical Conference (IEEE Cat. No.02CH37379), 2002, Page(s): 352-7.

47. Liu, Jicheng, Dingrong Shao, and Shujian, Li. "Research of hybrid DS/FH SS receiver based on coded-spread-spectrum", Proceedings of SPIE - The International Society for Optical Engineering, Volume 4911, 2002, Page(s) : 136-142.

48. Tranter, Shanmugan, Rappaport and Kosbar, Principles of Communication Systems Simulation with Wireless Applications, Prentice Hall PTR, 2004.

49. Maric, S.V. "Construction of optimal frequency hopping sequences for minimizing bit errors in selective fading channels characteristic to digital cellular systems", IEE Proceedings on Communications, Volume 142, Issue 4, August 1995, Page(s): 271 – 273.

50. Cassereau, P., and J. Jaffe. "Frequency hopping patterns for simultaneous multiple-beam sonar imaging", IEEE International Conference on Acoustics, Speech, and Signal Processing (ICASSP '87), Volume 12, April 1987 Page(s): 1704 – 1707.

51. Yang, Guu-Chang, and W. C. Kwong, "Design of frequency-hopping codes for mobile communication systems with multimedia services", IEEE Wireless Communications and Networking Conference (Cat. No.99TH8466), Volume 1 1999, pt. 1, Page(s): 442-6.

52. Han, Young Yearl, and Kyung Hee Lee, "Construction of new frequency-hopping sequence for FH/SSMA systems", IEEE 44th Vehicular Technology Conference (Cat. No.94CH3438-9), Volume.2, 1994, pt. 2, Page(s):1160-4.

53. Mott, J.H. "An algebraic method for the construction of families of sequences with good Hamming cross-correlation properties", Proceedings of the Twentieth Southeastern Symposium, March 20-22, 1988 Page(s):328 – 331.

54. Novosad, T. "Frequency hopping patterns based on finite geometry", IEEE Conference Record MILCOM '95, Volume 1, 5-8 November 1995, Page(s):325 – 329.

55. Bellegarda, J. R., and Titlebaum, E. L." The hit array: an analysis formalism for multiple access frequency hop coding", IEEE Transactions on Aerospace and Electronic Systems, Volume 27, Issue 1, January 1991, Page(s):30 – 39.

Vita

Yachna Sharma was born in New Delhi, India on March 12, 1977. She received her Bachelor of Science degree in Botany from Delhi University in May 1998. Intrigued by the fascinating world of wireless communications, she joined Mahila Institute of Technology (MIT), New Delhi, India and earned her Bachelor of Technology degree in Electronics and Communications in 2002. She joined the Electrical and Computer Engineering Department at the University of Tennessee, Knoxville in summer 2004 and received her M.S. degree in fall 2005. While at the University of Tennessee, she served as a graduate teaching assistant and worked at Oak Ridge National Laboratory (ORNL) as graduate research assistant. Her varied research interests include spread spectrum communications, software defined radio, digital signal processing and simulation of communication systems. Yachna is a student member of IEEE and a member of 'Phi Kappa Phi' honor society.