To the Graduate Council:

I am submitting herewith a thesis written by Edward Masuoka entitled "Modelling an Ordovician Marine Community Succession." I recommend that it be accepted in partial fulfillment of the requirements for the degree of Master of Science, with a major in Geology.

Kenneth R. Walker

Kenneth R. Walker, Major Professor

We have read this thesis and
recommend its acceptance:

L. E. McLaughlin

Randall E Elliott

Accepted for the Council:

L Evans Roth

Vice Chancellor
Graduate Studies and Research

Thesis
B
.M29
copy

MODELLING AN ORDOVICIAN MARINE COMMUNITY SUCCESSION

A Thesis

Presented for the

Master of Science

Degree

The University of Tennessee, Knoxville

Edward Masuoka

August 1978

1283621

ACKNOWLEDGMENTS

The writer expresses great appreciation to Dr. Kenneth R. Walker who advised the geologic aspects of this study and whose research provided the conceptual framework for this model. Appreciation is also given to Drs. R. E. McLaughlin and R. E. Cline for reviewing this thesis and offering many helpful criticisms. Flowcharts in this thesis were produced on the CALCOMP plotter by Penny Masuoka. Funding for this study was provided by Dr. Kenneth R. Walker from a National Science Foundation Research Grant and by a grant-in-aid from Sigma Xi. The writer also acknowledges the use of the University of Tennessee Computing Center, Knoxville, Tennessee, in obtaining the results presented in this thesis. Finally, the writer acknowledges help provided by Alice Beauchine in debugging the simulation model presented in this thesis.

ABSTRACT

Walker and Alberstadt (1975) described the cyclic succession of a marine community from thin bedded Ordovician limestone and shale couplets in East Tennessee. According to these authors, the succession began with the catastrophic burial of a diverse climax community under "soupy" terrigenous muds. Strophomena basilica was the first species to colonize these muds, its thin shell enabled this brachiopod to float on the surface of the fluid sediments. Cyclostome, trepostome and cryptostome bryozoans colonized the Strophomena shells. The most abundant of these bryozoans was the cryptostome species, Stictopora blackensis. Fragments of dead Stictopora colonies quickly covered the muds around the Strophomena shells and provided settling sites for bryozoan larvae and larvae of the rhychonellid brachiopod, Rostricellula rostrata. As the substratum changed from mud to a pavement of brachiopod and bryozoan debris the Strophomena population declined and Rostricellula and Stictopora dominated the community. Gastropods and pelmatozoans were common in the Rostricellula-Stictopora climax community. Walker and Alberstadt (1975) concluded that the whole succession of stages to the climax community was rapid compared to the total time between mud influxes.

A computer simulation of the community succession described by Walker and Alberstadt (1975) was undertaken to provide a tool for exploring the population biology of the two dominant brachiopod species in the community and the depositional rate of the limestones. The

volume selected for modelling was ten by ten by one and six-tenths inches and was divided into 0.1 x 0.1 x 0.1 inch cells. At the beginning of the simulation, the lowest layer of cells was filled with homogeneous anoxic watery muds and the layers above it were empty. Each year a fixed number of larvae of the three species in the model, Strophomena basilica, Rostricellula rostrata and Stictopora blackensis, attempted to settle in the plot at locations selected at random. If a larva settled on a substratum that mature individuals of the species were observed to occupy in limestones containing the succession, then it survived. After larval settling, all individuals which survived the previous year, grew to the size of an average individual of their species one year older. Average sizes of the two brachiopods at different ages were obtained from Walker and Parker (1976) and the bryozoan size was chosen so that colonies would not grow beyond the space being modelled. Postlarval mortality in the model had two causes: old age and overcrowding. The age at which an individual died was derived from Walker and Parker (1976). Crowding was measured by the area a shell or bryozoan colony overlapped the space occupied by other organisms. At the end of each year the model printed a census of the living and dead individuals of each species and, if requested, a print out of the space being modelled.

Simulation results suggested that Strophomena basilica was not an opportunistic species in the classical sense because its rate of larval production was too low. Further, model output indicated that juvenile mortality in the Rostricellula population studied by Walker and Parker

(1976) was an artifact of the catastrophic burial of the brachiopod population and was not representative of Rostricellula survivorship in the climax community.

The depositional rate of the limestone beds, 43cm/1000 years, was nearly equal to the Holocene carbonate sedimentation rate in the Florida reef tract. The time required to deposit the average thickness of limestone separating two shale beds was 61 years. The rough correspondence between this average frequency of mud influx and the frequency of hurricanes on the Atlantic coast of Florida, suggested that major storms may have transported muds into the subtidal "lakes" which contained this community. This idea was supported by Walker and Parker (1976) who noted the occurrence of coquinoid beds in the series of limestone and shale couplets containing the succession.

TABLE OF CONTENTS

SECTION		PAGE
I.	INTRODUCTION	1
II.	REVIEW OF THE LITERATURE	4
III.	GEOLOGIC INFORMATION USED TO CONSTRUCT THE SIMULATION	8
IV.	ASSUMPTIONS USED IN CONSTRUCTING THE MODEL	15
V.	DESCRIPTION OF THE MODEL	21
VI.	MODEL STRUCTURE	42
VII.	SENSITIVITY ANALYSIS	43
VIII.	RESULTS	72
IX.	SUMMARY AND CONCLUSIONS	86
BIBLIOGRAPHY		88
APPENDIX		92
VITA		149

LIST OF TABLES

TABLE		PAGE
1.	Larval Substratum Preferences for the Three Species	11
2.	Functions of Different Subroutines in the Program	24
3.	Comparison of the Percent Areas Occupied by the Three Species in Peels of a Limestone Slab and Two Levels of the Model	43
4.	Comparison of Published Survivorships and Survivorship Curves Produced by the Model at Year 11 for Strophomena Populations and at Year 40 for Rostricellula. Acceptable Ranges of Survivorship for the Published Curves are Based on a Reinterpretation of the Data Presented by Walker and Parker (1976)	49
5.	Values of an Individual's Tolerance to Crowding in the Run Whose Output Best Matched the Published Survivorship from Walker and Parker (1976)	51
6.	Number of Larvae Produced Each Year by the Three Species in the Run Which Best Matched Published Survivorships . . .	51
7.	Mean Survivorship and Confidence Limits for Strophomena Age Classes with 20 Percent Changes in the Tolerance of Strophomena Age Classes to Crowding	53
8.	Mean Survivorships and Confidence Limits for Rostricellula Age Classes with 20 Percent Changes in the Tolerance of Rostricellula Age Classes to Crowding	54
9.	Mean Survivorship and Confidence Limits for Rostricellula Age Classes with 20 Percent Changes in the Tolerance of Strophomena Age Classes to Crowding	56
10.	Mean Survivorships and Confidence Limits for Strophomena Age Classes with 20 Percent Changes in the Tolerance of Rostricellula Age Classes to Crowding	57
11.	Mean Survivorship and 95 Percent Confidence Limits for Strophomena Age Classes with 20 Percent Changes in the Larval Production of the Three Species	58

TABLE PAGE

12. Mean Survivorship and 95 Percent Confidence Limits for Rostricellula Age Classes with 20 Percent Changes in the Larval Production of the Three Species 59

13. Variations in the Number of Individuals of Each Species in the Model at Year 42 with Changes in Strophomena Age Classes' Tolerance to Crowding 60

14. Variations in the Number of Individuals of Each Species in the Model at Year 42 with Changes in Rostricellula Age Classes' Tolerance to Crowding 61

15. Variations in the Number of Individuals of Each Species in the Model at Year 42 with Changes in the Rate of Larval Production for the Three Species 62

16. Thickness of the Limestone Bed at Year 42 for Different Runs in Which Each Species' Tolerance to Crowding Was Varied by 20 Percent of Its Value in the Run Which Best Matched Published Survivorships from Walker and Parker (1976) 63

17. Thickness of the Limestone Bed after Forty-Two Years of the Succession for Variations in the Larval Production of the Three Species 65

18. Comparison of the Percent of Total Area Occupied by Different Taxa in the Two Peels 70

19. Depositional Rates for Holocene Carbonate Sediments from Milliman (1974) 84

LIST OF FIGURES

FIGURE		PAGE
1.	Reconstruction Showing the Eight Stages of the Strophomena-Rostricellula Succession (from Walker and Alberstadt, 1975)	3
2.	Locality Map Showing the Section from Which Walker and Alberstadt Described the Succession, Locality 1 and an Additional Section Measured by the Author (Modified from Walker and Parker, 1976)	9
3.	Models of the Average Individual of Strophomena basilica for Each Age Class from the Populations Studied by Walker and Parker (1976)	16
4.	Models of the Average Individual of Rostricellula rostrata for Living Individuals in Life Position from the Populations Studied by Walker and Parker (1976).	17
5.	Models of the Average Individual of Rostricellula rostrata for Each Age Class from the Populations Studied by Walker and Parker (1976)	18
6.	Flowchart of the Main Routine	26
7.	Flowchart of the Subroutine SETTLE	27
8.	Flowchart of the Subroutine GROW	28
9.	Flowchart of the Subroutine ZERO	29
10.	Flowchart of the Subroutine FALL	30
11.	Flowchart of the Subroutine MORTAL	31
12.	Flowchart of the Subroutine FIXIJ	32
13.	Flowchart of the Subroutine ZEROO1	33
14.	Flowchart of the Subroutine LIFT	34
15.	Flowchart of the Subroutine REGEN1	35
16.	Flowchart of the Subroutine REGROW	36

FIGURE PAGE

17. Flowchart of the Subroutine ROSKIL 37

18. Flowchart of the Subroutine CENSUS 38

19. Flowchart of the Subroutine SURFAC 39

20. Flowchart of the Subroutine MAP 40

21. Flowchart of the Subroutine BIOTA 41

22. Plot of Years 11 through 60 in the Succession versus Survivorship in the Age Classes of the Strophomena Population 45

23. Plot of Years 11 through 60 in the Succession versus Survivorship in the Three Age Classes of the Rostricellula Population 46

24. Survivorship Curve for Strophomena basilica 47

25. Survivorship Curve for Rostricellula rostrata 48

26. Plot of the Number of Living Individuals for Both Brachiopod Species during a Run of the Model Tuned to Match the Fossil Populations' Survivorship Curves 66

27. View of the Plot in the Fifth Year after Mud Influx 74

28. View of the Plot in the Ninth Year after Mud Influx 75

29. View of the Plot in the Twenty-Fourth Year after Mud Influx 77

30. Survivorship Curves for the Time Averaged Population of Strophomena (Octagons) and the Living Population of Strophomena Based on Mean Survivorships for Each Age Class during the First Forty Years of the Succession 79

31. Survivorship curves for the time averaged population of Rostricellula (octagons) and the living population of Rostricellula (triangles) based on the mean survivorship for each age class in the populations during the first forty years of the succession 80

32. Plot of the time required to deposit a given thickness of limestone in the model 82

33. Length of time between mud influxes at the measured section from locality two 83

I. INTRODUCTION

Johnson (1972) recognized the importance of physical disturbance in maintaining diversity in shallow marine communities. He viewed a community, which was subject to periodic physical catastrophies, as a mosaic of subcommunities at different stages in succession. These subcommunities existed because of the nonuniform distribution of the physical disturbances over the area and the different rates at which patches of the environment returned to the climax stage. Undisturbed, the whole community would ultimately reach a stage composed solely of equilibrium species.

In two modern marine communities, Hawaiian coral reefs (Grigg and Maragos, 1974) and a rocky intertidal community (Dayton, 1971), disturbance maintained high diversity by preventing the development of a climax stage composed of competitively dominant equilibrium species. The period between disturbances, measured in years in the intertidal community and tens of years in the reef community, was shorter than the time required for the whole community to reach a climax stage.

From a section of thin bedded Middle Ordovician limestones and calcareous shales Walker and Alberstadt (1975) described cyclic successions of a shallow water marine community. Each cycle began with an influx of terrigenous muds, which smothered the established climax community. The brachiopod, Strophomena basilica, populated these soupy muds and its shells provided a hard substratum upon which

bryozoan larvae could settle. Later, fallen bryozoan colonies, primarily Stictopora blackensis, provided attachment sites for the brachiopod Rostricellula rostrata. After debris from the Rostricellula-Stictopora community completed the stabilization of the mud gastropods, ostracods and cephalopods entered the area (see figure 1). Based on the occurrence of the Rostricellula-Stictopora climax community on the tops of limestone slabs from one inch to several inches in thickness Walker and Alberstadt hypothesized that the succession from the pioneer stage to the climax stage was rapid.

The purpose of this study was to provide a time framework for the Ordovician succession and to explore the population biology of the two brachiopod species which dominated the community. To this end, a computer simulation model was constructed that built up a skeletal limestone from accumulated debris. The debris was composed of the remains of the three dominant species in the community, as these species competed for space, food and settling sites in a ten by ten inch plot.

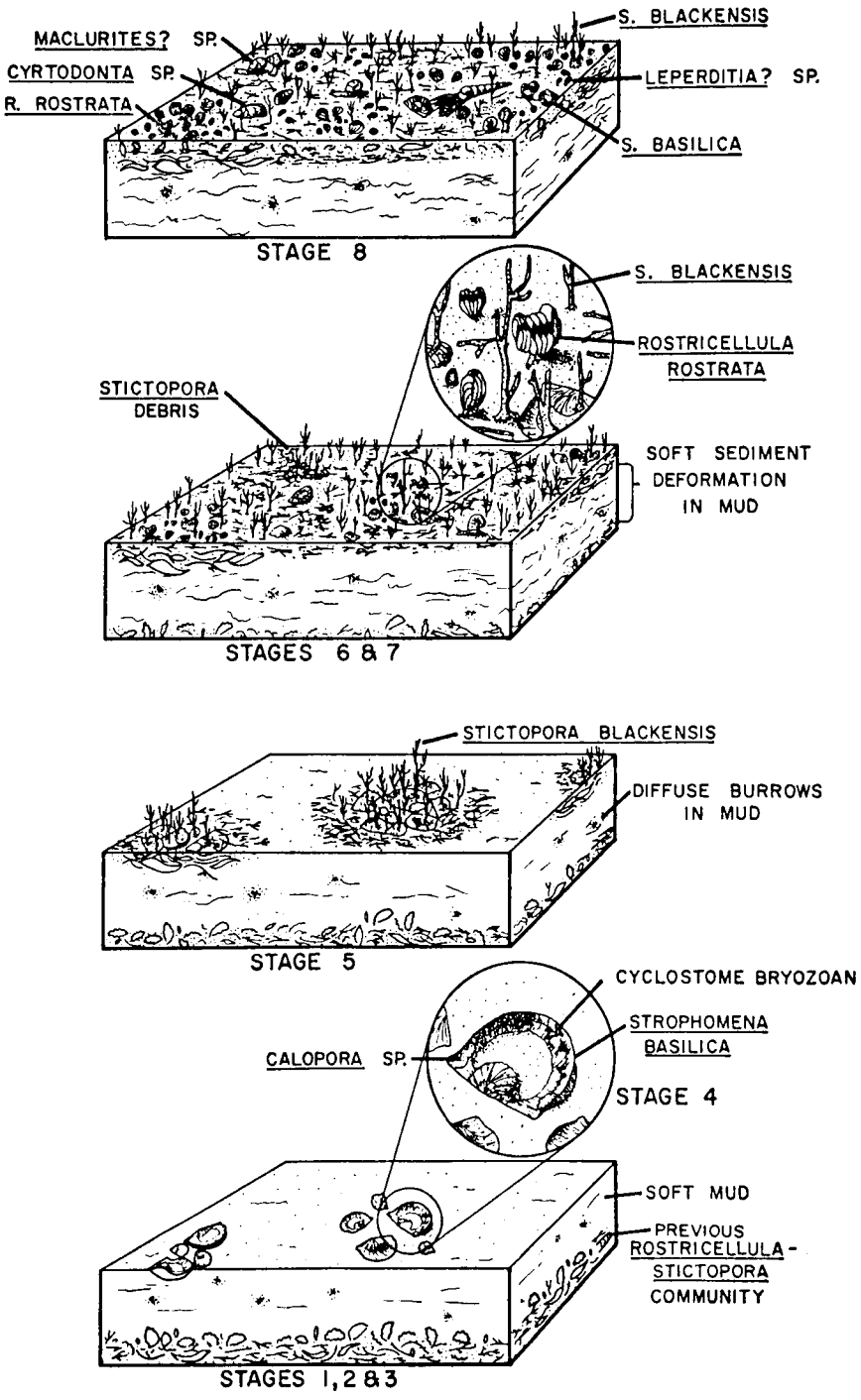

Figure 1. Reconstruction showing the eight stages of the Strophomena-Rostricellula succession (from Walker and Alberstadt, 1975).

II. REVIEW OF THE LITERATURE

In paleoecology several models have been developed to show the effects of varying values of environmental and population parameters on the distribution and abundance of populations. Craig and Oertel (1966) constructed a model to explore the effects different values of growth, death and the frequency of recruitment had on size frequency histograms of the living populations and the fossil deposit left behind by those populations. Fox (1968) modelled the abundances of ten brachiopod genera in the Upper Ordovician Richmond Group in Southeastern Indiana. In his model the size of a brachiopod population was a function of temperature of the seawater, depth and salinity. By adjusting the values of these parameters at different points in time and carefully choosing the tolerances of the ten brachiopod genera to the parameters, Fox was able to approximate the observed abundances of the brachiopod genera throughout the Richmond Group.

Two models of Paleozoic communities employed the response of organisms to certain physical factors to predict the distribution and thickness of the carbonate sediments containing those communities. In the model of Harabaugh (1966), the probability that a community at a given location would occupy that location in the following year was a function of the communities which bordered it, how long it had occupied that location, and several environmental factors. Output from the model was a series of maps and cross sections which illustrated the distribution and thickness of each type of carbonate sediment. Lorenz

(1970) presented a model of a brachiopod-bryozoan community in which the species composition and spatial distribution of the community was a function of the number of larvae produced by each species, effect of bottom currents, and place where the larvae settled. His model successfully predicted the size, shape, and spatial distribution of limestone lenses containing Upper Ordovician communities within the thick shale sequences of the Eden Formation.

Most computer simulations of community succession have been developed in ecology and forestry. The majority of these are compartment-flow models or Markov process models.

Shugart et al. (1973) presented a compartment-flow model of forest succession in the Great Lakes region. Fifteen compartments stored individuals of the different tree species. Each compartment was in turn divided into three subcompartments representing seedlings, pole timber, and saw timber. Differential equations represented the rate at which individuals moved to new compartments. With this model the authors were able to study changes in species composition during the forest succession and determine the composition of the equilibrium forest community. This type of model is also used to study the effect of different natural agents, fire and pests, and management techniques on a forest or animal population.

Horn (1976) provides an excellent summary of Markov models of succession. These models use a table, which contains the probability that a given plant will be replaced by another of a different species, to predict the composition of the forest in the future. If the

probabilities in this table do not change over time, the community in the model will always approach a steady state. Thus, these models may be used to determine the composition of the community at different points in the succession.

Most spatial simulations focus on interactions between individuals during growth. Mitchell's (1966, 1971) model of single species forest stands emphasizes the process of branch pruning in the competition for crown space. Arney's (1972) model resolves competition for growing space between the crowns of different trees by making the survival of a whorl of branches a function of the degree it overlaps with the branches of another tree. The most complex model of forest succession was FOREST II by Ek and Monserud (1976). In their model the rate of crown expansion for each species is determined from studies of the forest area which will be modelled. The rate of crown growth for an individual tree is the rate of growth for its species modified by the degree it overlaps with other crowns and how much it is shaded by neighboring trees.

The sole example I discovered of spatial simulation of a marine community is the model of coral colony competition by Maguire (1977). In this model the locations where spat settle are chosen with a random number generator. If a larva settles in an unoccupied spot in the plot it survives; otherwise it is eaten by established coral colonies. When two colonies grow into the same space, the more dominant coral in field studies of Pacific reefs captures the space by growing over or digesting a portion of the other colony. Spatial

simulations such as the one by Maguire (1977) and others noted provide information about the succession process through modelling the interaction between individuals in the community.

III. GEOLOGIC INFORMATION USED TO CONSTRUCT THE SIMULATION

The succession described by Walker and Alberstadt (1975) is preserved in lithologies which Milici and Walker (1973) found to match most closely sediments from modern subtidal ponds in Florida Bay. The absence of a typical deep water pelagic fauna and the presence of a diverse fauna of trilobites, brachiopods, gastropods, ostracodes, cephalopods, pelecypods and bryozoans suggests that the limestones were deposited in shallow water. Normal marine salinity is evidenced by the diverse fauna, absence of stunted organisms and the absence of pyrite. The geographic location of this area in the Middle Ordovician was twenty to thirty degrees south of the equator based on a paleomagnetic reconstruction by Smith, Briden and Drewry (1973). An application of the criteria of Johnson (1960) for determining the degree of transport of a fossil assemblage revealed no significant transport of the remains of organisms in the community in most slabs containing the succession. The surfaces of shells were unabraded and minute details of ornamentation are preserved on many shells. Many brachiopod valves are articulated and some are still in life position. The fossil assemblage contains many different species and there is no evidence of size sorting or any preferred alignment of the long axes of fragmented bryozoan colonies. Limestone beds at localities designated 1 and 2 (see figure 2) have their upper surfaces covered with unfossiliferous shales. These shales show soft sedimentary

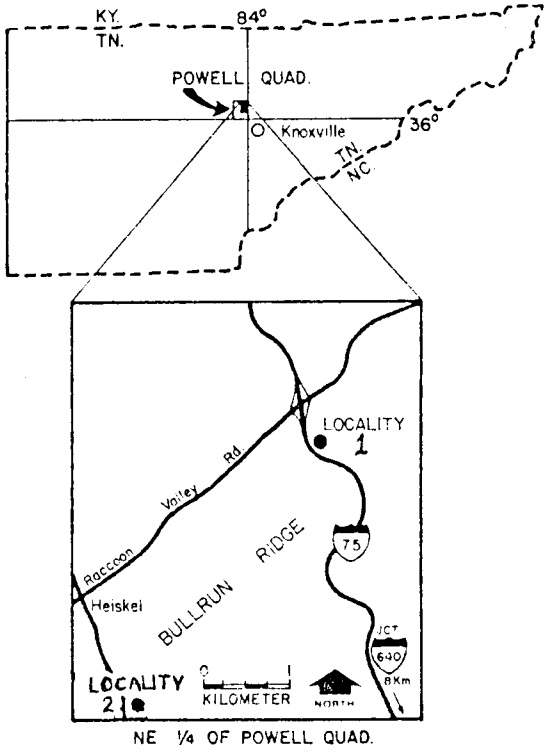

Figure 2. Locality map showing the section from which Walker and Alberstadt described the succession, locality 1 and an additional section measured by the author (modified from Walker and Parker, 1976).

"boudinage" and animal burrows in these shales have indistinct margins. These characteristics of the shales indicate that they were very soft for some time after their deposition. Walker and Alberstadt (1975) noted that the upper surfaces of slabs often contained individuals in life position suggesting that the muds which killed the community on top of the slab were transported into the environment quite rapidly.

Information about the autecology and population biology of the two dominant brachiopod species in the community was obtained from a survey of thirty-five slabs by the present writer and a paper by Walker and Parker (1976) which dealt with the population dynamics and growth rates of Strophomena basilica and Rostricellula rostrata. Careful examination of the surfaces of the thirty-five limestone slabs suggested that the larvae of the three species settled on a limited number of the available substrates in the community. Larval settlement preferences are summarized in table 1 and discussed below. Criteria for recognizing when larvae of a certain species settled on a substratum were attachment of adult individuals on the substratum and the repeated presence of individuals of that species resting unattached on the substratum. Strophomena basilica larvae settled on soft mud and shell debris. Shells of Strophomena basilica are found coating the bottom of limestone beds and in the shale to limestone transition zone which immediately underlies the limestone beds (Walker and Alberstadt, 1975). This occurrence is evidence of the strophomenid's ability to pioneer the soft mud substratum. Strophomena is also found on the tops of some slabs which contain the Rostricellula-Stictopora climax community.

Table 1

Larval Substratum Preferences for the Three Species

Substratum Type	*Strophomena* Larvae	*Rostricellula* Larvae	*Stictopora* Larvae
Bare mud	X		
Live *Strophomena*	X		X
Live *Rostricellula*			
Live *Stictopora*			
Dead *Strophomena*	X	X	X
Dead *Rostricellula*		X	X
Dead *Stictopora*	X	X	X

X indicates that larvae of the species will settle on the substratum type.

The substratum in the climax community is composed of shell debris and the presence of Strophomena there is evidence of its ability to survive on shelly substrates as well as muds. In fact, seven Strophomena shells in the population studied by Walker and Parker have small Strophomena shells attached to their pedicle valves.

Rostricellula rostrata larvae settled on all types of shelly substrates. Observations of the tops and bottoms of the slabs revealed Rostricellula adults on ostracod valves, other Rostricellula shells, trilobite debris, Stictopora blackensis limbs and on the shells of Strophomena basilica. In the two occurrences on Strophomena shells, it appeared that the animal bearing the host shell had died prior to the settlement of the Rostricellula larvae. Stictopora branches were the most often utilized substratum in the early and middle stages of the succession, due in part to their great abundance. In later stages disarticulated Rostricellula valves proved as important as Stictorpora branches in providing settling sites for Rostricellula larvae. Other rhychonellid genera studied by Richards (1972) in the Ordovician rocks of the Richmond Group also settled on a variety of substrates.

Stictopora blackensis larvae settled primarily on Strophomena basilica shells. In early stages of succession only Strophomena shells were present to provide the hard substratum that bryozoan larvae require for attachment (Ryland, 1970). In the populations studied by Walker and Parker (1976) 34 percent of the two hundred thirteen Strophomena shells had bryozoan epibionts on one or both valves.

In contrast, only two of the two hundred fifty-three Rostricellula shells had bryozoan epibionts on their valves. Richards (1972) found that flat strophomenids, Rafinesquina and Strophomena, were preferred settling sites for epizoans. Coarsely ribbed shells like Platystrophia, had few epibionts on their surfaces. He noted that in general, steep ribs were a better deterrent to epizoan settlement than gentle ones. This explains the absence of Stictopora on Rostricellula shells in the limestones. On upper surfaces of some slabs Stictopora branches account for 80 to 90 percent of the volume of fossil debris. This suggests that Stictopora colonies occasionally lived in bryozoan thickets and that Stictopora larvae were able to settle upon a substratum composed of the debris from dead bryozoan colonies.

The life position of Rostricellula rostrata used in constructing this model was based on the discovery of clumps of articulated Rostricellula shells attached to bryozoan debris in gravitationally unstable positions. The pedicle foramen of Rostricellula increased in proportion to the size of the shell indicating that individuals of this species were attached throughout their lives.

The unattached mode of life of the adult stages of many Paleozoic strophomenids is well documented in the paleontologic literature (Lamont, 1934; Rudwick, 1965; Richards, 1972; Walker and Alberstadt, 1975; and Walker and Parker, 1976). Epibiont data and the occurrence of articulated Strophomena shells on the surfaces of slabs suggests that Strophomena basilica lived with its convex valve resting on the substratum and a thin film of silt covering a portion of its concave

valve. The failure of the pedicle foramen of Strophomena shells to increase in proportion to shell growth is further evidence of unattached mode of life in the adult stage of Strophomena.

IV. ASSUMPTIONS USED IN CONSTRUCTING THE MODEL

The purpose of this section is to detail the assumptions involved in the construction of the model and to present evidence supporting them.

A major assumption is that species reproduce only once a year. Payne (1963) and Thayer (1975) reported that annual spawning is the dominant pattern of reproduction in modern brachiopods. They also note that when there is more than one spat fall each year, one spawning is much larger than the other.

Another important assumption was that growth of an individual brachiopod is best modelled as a series of discrete year size increments rather than a continuous process. The growth lines on a brachiopod shell, which are used to determine size at a given age, are secreted during a yearly cessation or slow-down of growth. Thus, they provide no clue to the size of the brachiopod at a half year interval, for example. The likelihood that the growth rate is not uniform during the time between the secretion of any two growth lines results in a great deal of uncertainty constructing half year sizes. The simulated outlines of the various year classes of the two brachiopods are illustrated in figures 3, 4 and 5.

Competition for growing space was assumed to be an important cause of mortality in the two brachiopod species. Evidence of crowded conditions in the community is indicated by the dense clusters of Strophomena basilica shells which coat the bottoms of the limestone

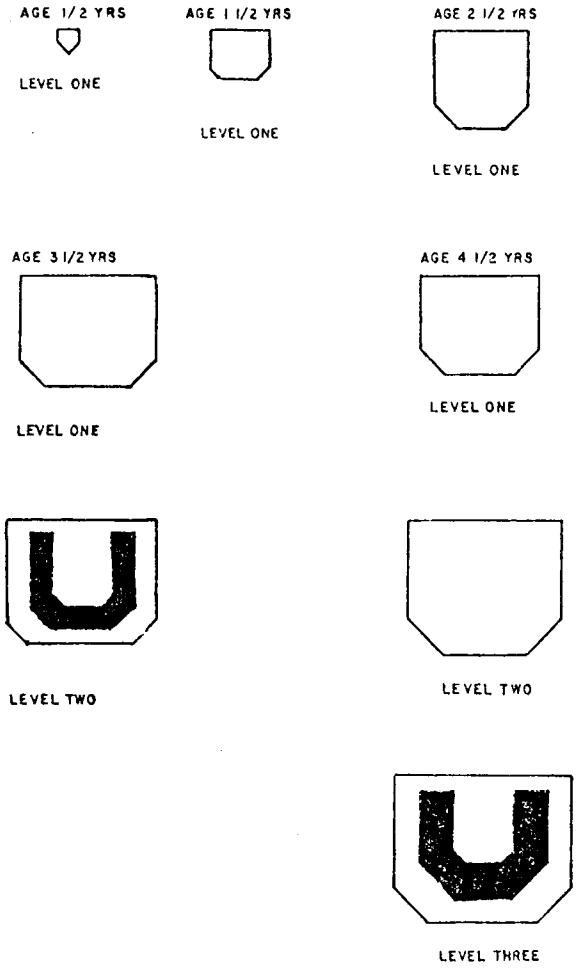

Figure 3. Models of the average individual of Strophomena basilica for each age class from the populations studied by Walker and Parker (1976). Dark areas are portions of the shells covered by sediment.

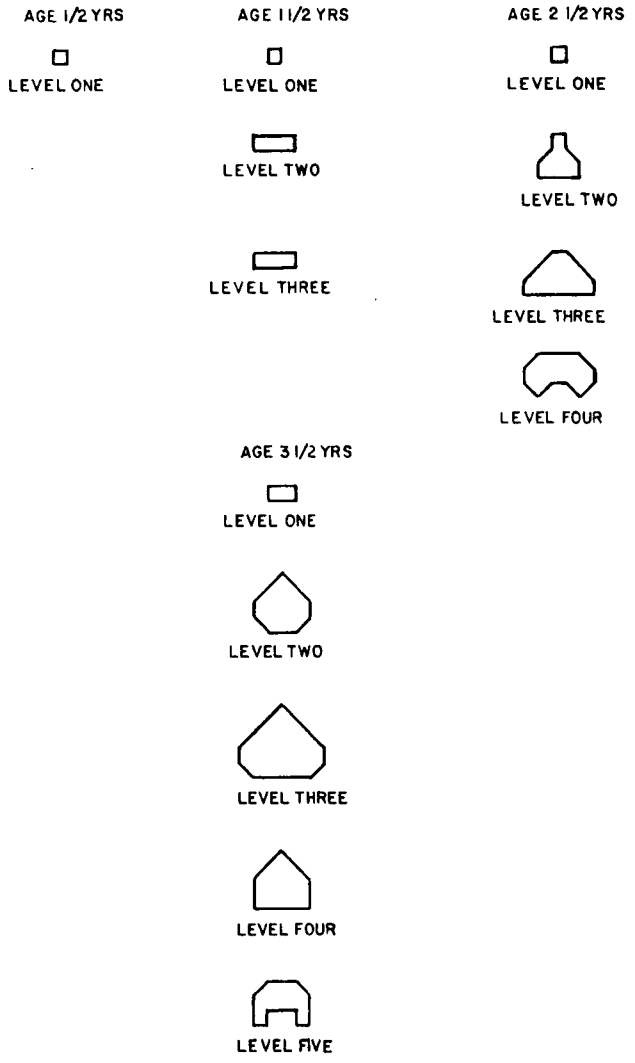

Figure 4. Models of the average individual of Rostricellula rostrata for living individuals in life position from the Populations studied by Walker and Parker (1976).

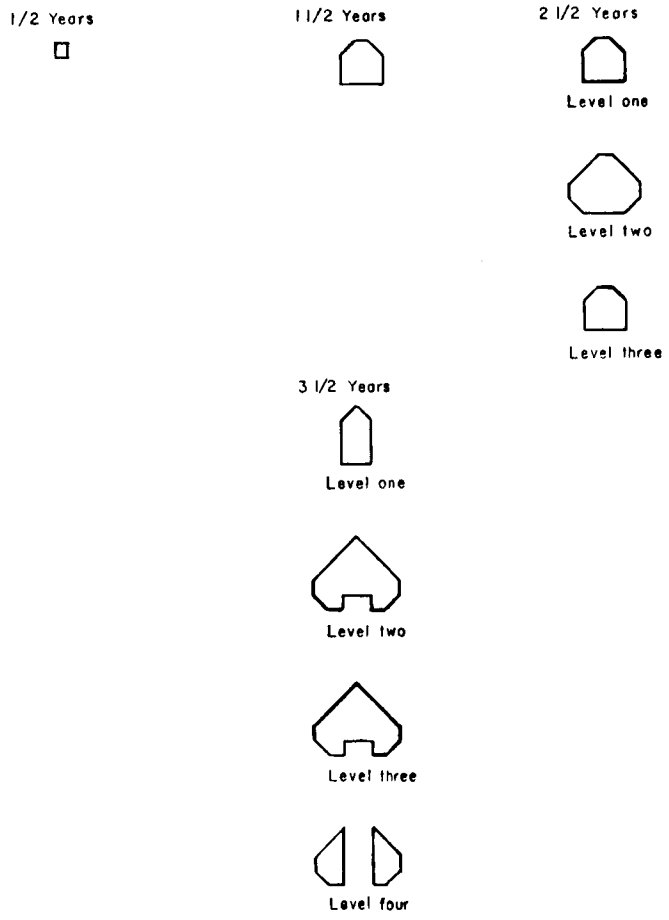

Figure 5. Models of the average individual of Rostricellula rostrata for each age class from the populations studied by Walker and Parker (1976). Models represent dead individuals which have rotated from the tilted in-life-position to the gravitationally stable death orientation.

slabs and by the presence of Rostricellula rostrata individuals in dense clumps. The deformed shell margins of small individuals of Rostricellula are further proof of crowding. Under the crowded conditions the feeding currents of individual brachiopods must have overlapped, creating competition for food. The feeding currents of both Strophomena basilica and Rostricellula rostrata were modelled after those of modern rhychonellid brachiopods, chosen because they are believed to possess the same feeding mechanism as the extinct Paleozoic taxa used in the model (Rudwick, 1970).

Several assumptions were made in order to reduce the amount of memory required to run the program. The first assumption was that the area of the plot, ten inches by ten inches, was sufficent to model the succession. This was necessitated by the storage limitation of the program to 512K words. The limitation on available core storage did not seriously affect the comparisons between the program output and the slabs containing the succession because the surface area of most slabs was less than one hundred square inches. The height of Stictopora colonies was limited to 0.5 inches to insure that no colonies grew out of the area which was being modelled. Although this assumption is demonstrably incorrect (judging from the lengths of Stictopora limbs on bed surfaces), it was required by the geometry of the simulation volume.

Finally, two other assumptions were made in order to simplify the mechanics involved in the growth and death of individuals. First, it was assumed that the individuals of the two brachiopod

species were oriented in one of eight directions, 0, 45, 90, 135, 180, 215, 270 and 315 degrees. This assumption was made to avoid dealing with shapes of individuals turned so that the brachiopod filled less than half of some cells in the model. Second, it was assumed that growing shells were not capable of pushing other shells aside with their growing margin. This assumption was made first to avoid the difficulty involved in moving shells in the area being simulated. Secondly, if shells were allowed to move each other it would have been impossible to use the degree of overlap between shells as a criterion for determining when an organism died from overcrowding.

V. DESCRIPTION OF THE MODEL

As previously noted, the model developed in the present study recreates a succession of Ordovician marine communities in a ten inch by ten inch plot selected from an area covered by soupy muds. Beginning at the sediment water interface sixteen planes spaced 0.1 inch apart record the vertical distribution of organisms in the model. To reduce the amount of main memory required to store the space being simulated, once the lowest level contains only dead individuals and is completely covered by the level above it is eliminated. The space used to store this level is then used to store a new level of the plot.

In the model the three species reproduce once each year and the number of larvae which attempt to settle in the plot is independent of the number of adults in the plot. The larvae of modern bryozoans, which like Stictopora blackensis lack brood chambers, develop a free swimming stage with a functional digestive system and remain in the water column for two to twelve months. Although of only a few hours duration, modern articulate brachiopods also have a free swimming larval stage (Rudwick, 1970). The small size of the plot used in the present model makes it unlikely that the brachiopod larvae from individuals in the plot would ever resettle there.

The horizontal coordinates at which a larva attempts to settle in the plot were generated with the random number generator RANDU. A stack of sixteen cells at these coordinates were examined from the

top down to find the first full cell upon which a larva would attempt settlement. If the substratum in the cell was a suitable settlement site for members of its species, the larva settled in the empty cell above it. If the larva drifted into a cell which contained a feeding current, the larva was eaten. Finally, if the first nonempty cell the larva encountered was not a suitable substratum for settlement, then the larva drifted out of the plot to try settling in another area. This process continued until all larvae of the three species had attempted to settle in the plot. Note again that, substratum preferences for the larvae of each species appear in table 1, pg. 11.

After larval settling all brachiopods which have survived the previous year's competition grow to the size of the average individual of their age class in the populations measured by Walker and Parker (1976). Average sizes for each age class and limits on the lifespan of the two brachiopods, Rostricellula rostrata and Strophomena basilica, were obtained from Walker and Parker (1976, figures 3 through 8) and from measurements by the writer of selected individuals in the populations studied by them (see figures 3, 4 and 5, pages 16 through 18).

After individuals settle in the plot, they must compete for food and growing space in order to survive. The degree of competition an individual experiences as it grows is measured by the number of cells it shares with neighboring organisms. Feeding currents in this model are represented in terms of the area they fill and an overlap between feeding currents is treated the same as an overlap between shells. Should the number of overlapping cells exceed the amount of contact

allowed an individual of its age class, the organism dies. The amount of crowding individuals in the model can survive was varied until brachiopod survivorship in the model matched survivorship curves published by Walker and Parker (1976).

At the end of each year the program prints a census of the dead and living populations of each species. Survivorship on the basis of a cohort of one thousand individuals is calculated for both brachiopod species. One may also specify levels of the plot to be printed in a particular year and when this option is specified the program also determines the amount of surface area in that level occupied by each species. This feature facilitates comparisons of the abundance and distribution of organisms between the model and limestone slabs. More details on model functions appear in table 2 and in figures 6 through 21. Table 2 describes the tasks performed by each subroutine, which subroutines it calls and which subroutines call it. Figures 6 through 21 show how each subroutine operates. Appendix A contains the program listing.

Table 2

Functions of Different Subroutines in the Program

Name	Function	Called by	Calls
SETTLE	Determines if larvae can settle at the coordinates generated by RANDU. Calls GROW if larvae are *Stictopora blackensis*.	MAIN	GROW
GROW	Grows a bryozoan colony at each location where a larva settled.	SETTLE	ZERO
ZERO	Empties the space filled by living bryozoan colonies.	GROW	FALL
FALL	Scatters pieces of the dead colonies in the plot.	ZERO	
BIOTA	Grows brachiopods in the plot. MORTAL is called if an individual dies. LIFT and REGROW are called to raise individuals which settled on top of growing shells. REGEN1 and REGEN2 are called to handle the growth of a shell at a particular level in the plot.	MAIN	MORTAL LIFT REGROW REGEN1 REGEN2
MORTAL	Places a dead shell at the spot occupied by a living shell. FIXIJ is called to establish the bounds in which the living shell is found. ZERO1 and ZERO2 are called if the shell is a one year old *Rostricellula rostrata*.	BIOTA	FIXIJ ZERO1 ZERO2
FIXIJ	Sets the boundaries in which a shell is to grow or be replaced by a dead shell.	MORTAL REGEN1 REGEN2	
ZERO1 ZERO2	Empty the area occupied by a living *Rostricellula* when it dies.	MORTAL	
LIFT	Saves the coordinates of all organisms living on top of a growing shell.	BIOTA	

Table 2 (Continued)

Name	Function	Called by	Calls
REGROW	Lifts the coordinates of the organisms on top of a growing shell to the upper surface of the shell after it has finished growing.	BIOTA	
REGEN1 REGEN2	Grows a brachiopod shell at each level in the plot. MORTAL called if the shell dies of overcrowding. FIXIJ is called to define the boundaries in which the shell will grow.	BIOTA	MORTAL FIXIJ
CENSUS	Prints a census of the total number of living and dead individuals for all three species. Calculates survivorships for the two brachiopod species. Prints the total number of cells filled in each level of the plot and the number of individuals alive in each level in the plot. Eliminates the lowest level in the plot when it no longer affects events in the model. MAP is called when the lowest level in the plot is eliminated.	MAIN	MAP
SURFAC	Makes a census of the surface of the shell deposit in the plot to determine the number of cells filled by each species.	MAIN	
MAP	Prints a level in the plot and determines the number of cells filled by each species in that level.	MAIN CENSUS	

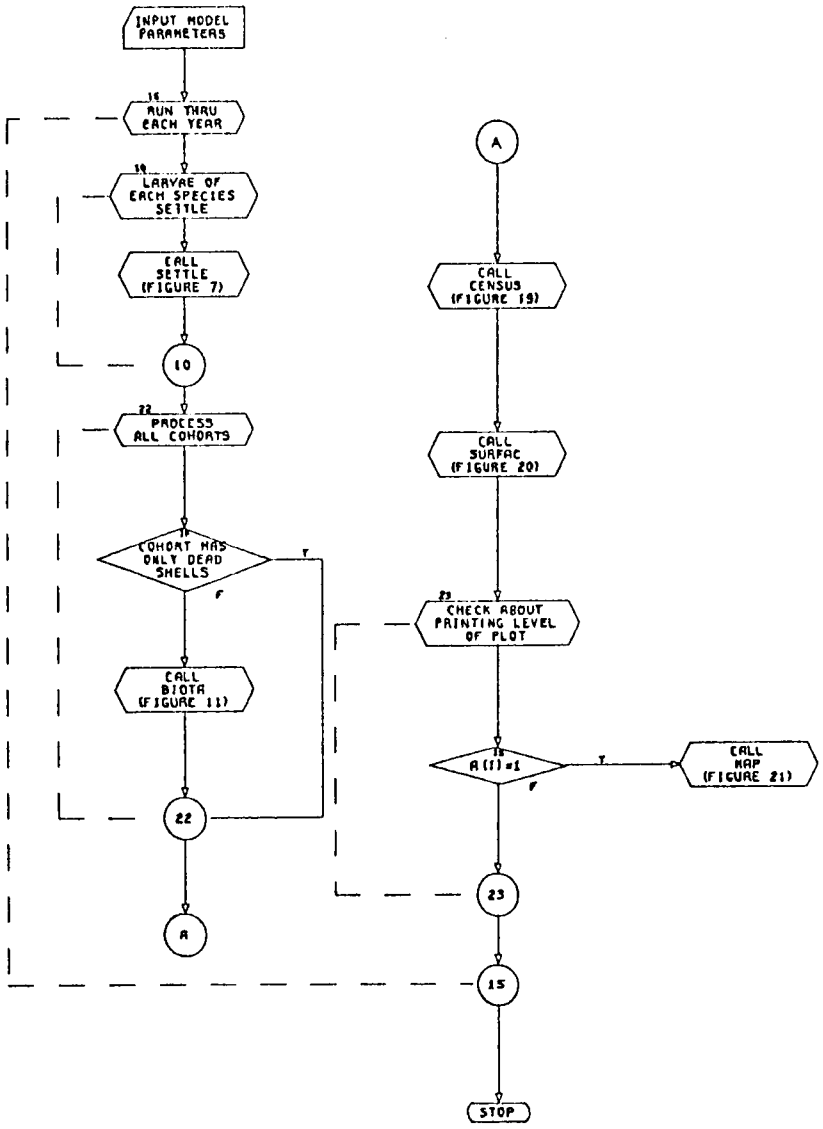

Figure 6. Flowchart of the main routine.

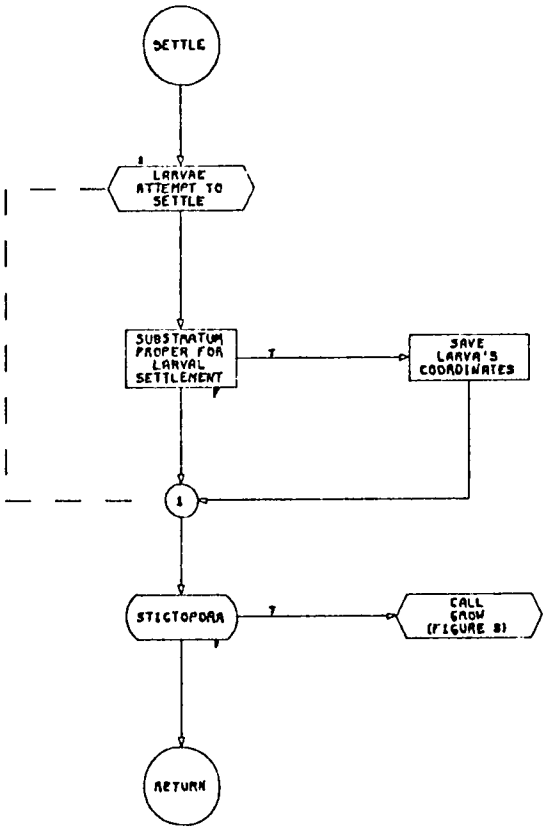

Figure 7. Flowchart of the subroutine SETTLE.

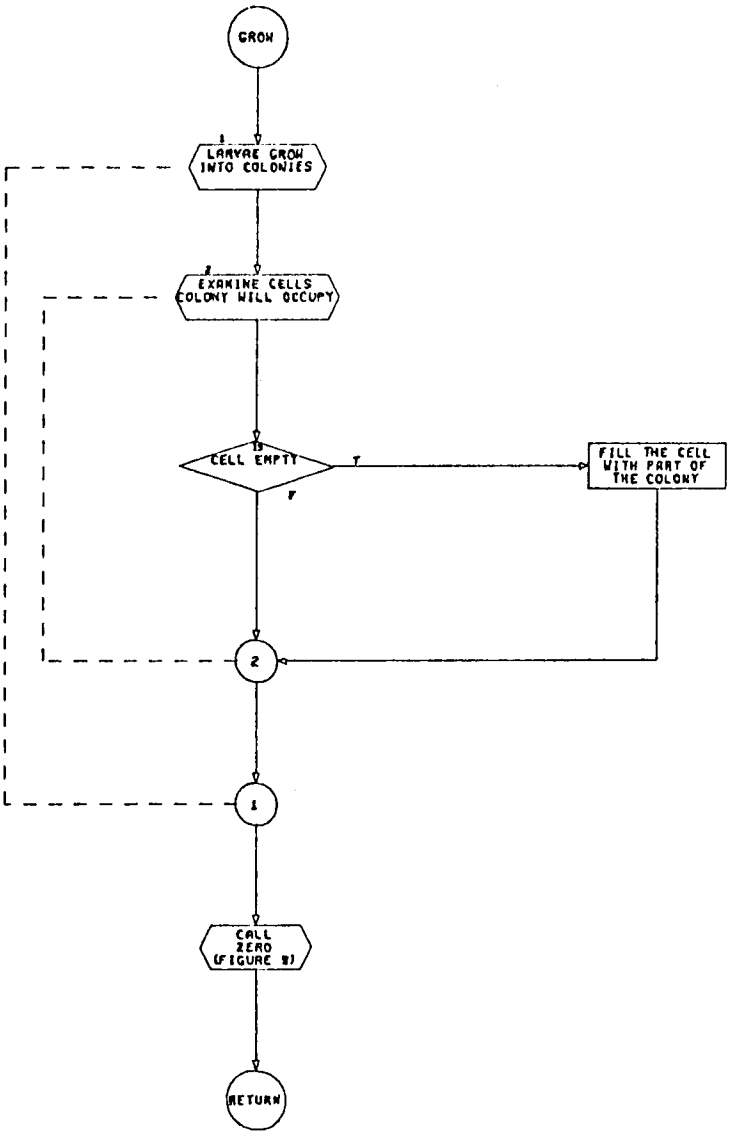

Figure 8. Flowchart of the subroutine GROW.

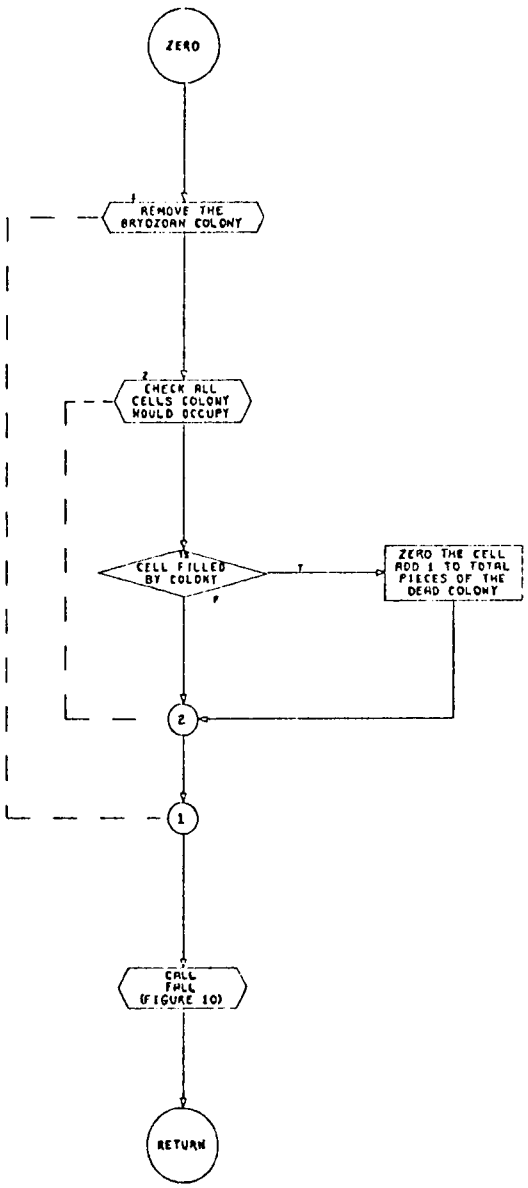

Figure 9. Flowchart of the subroutine ZERO.

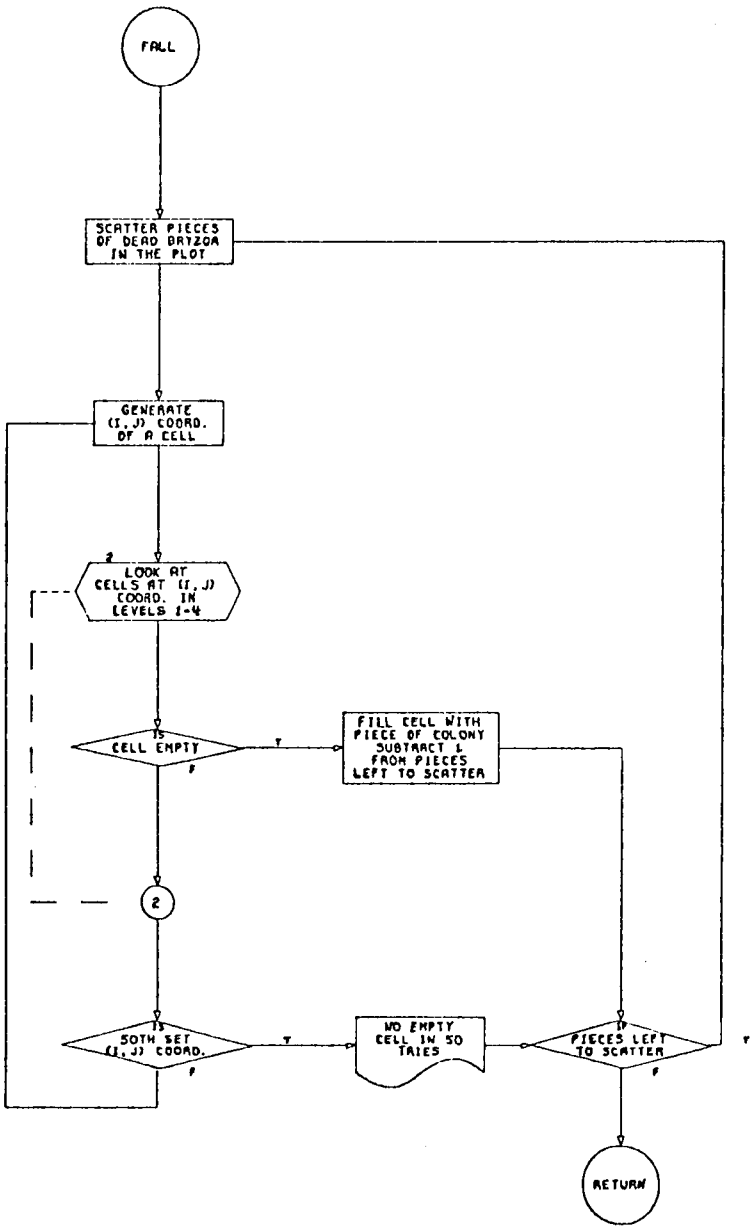

Figure 10. Flowchart of the subroutine FALL.

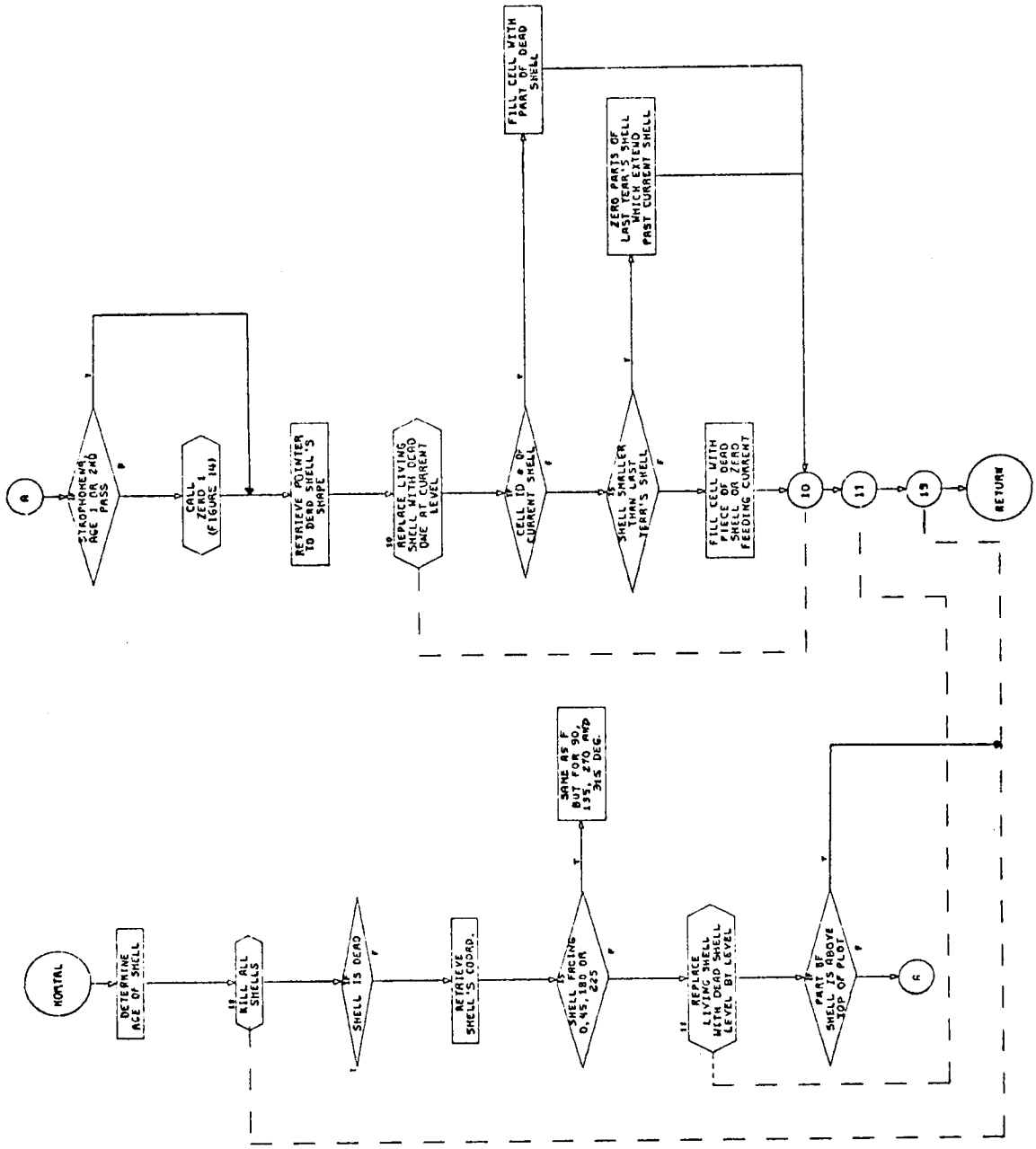

Figure 11. Flowchart of the subroutine MORTAL.

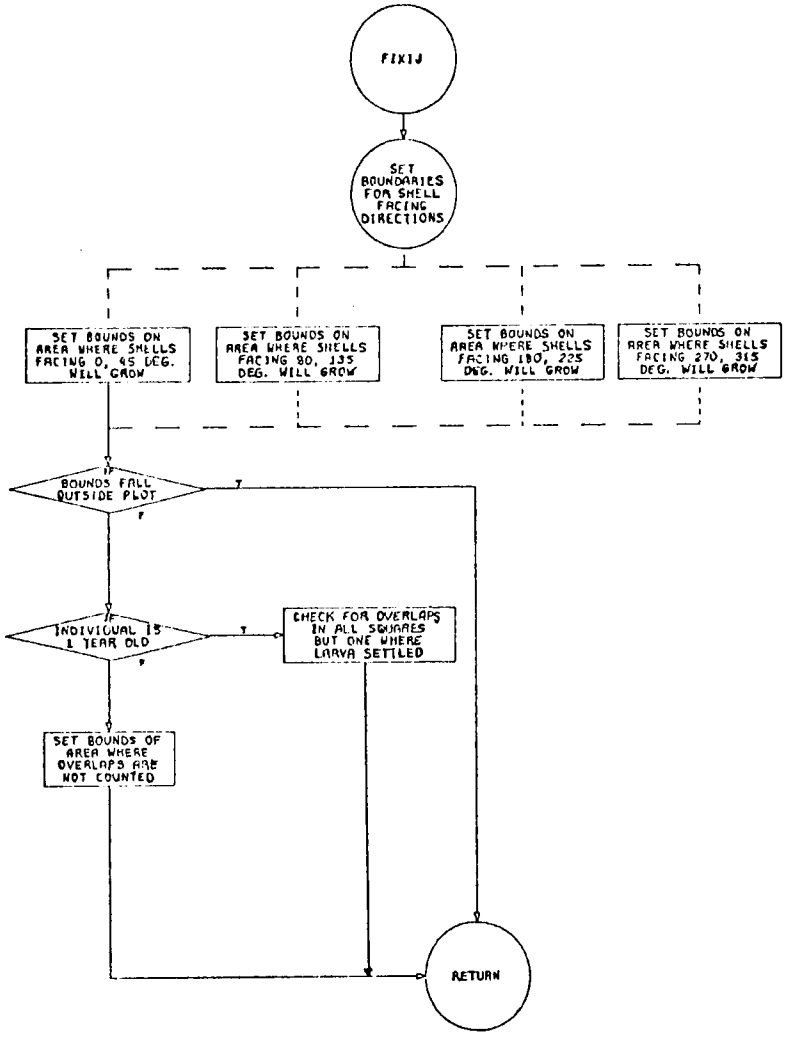

Figure 12. Flowchart of the subroutine FIXIJ.

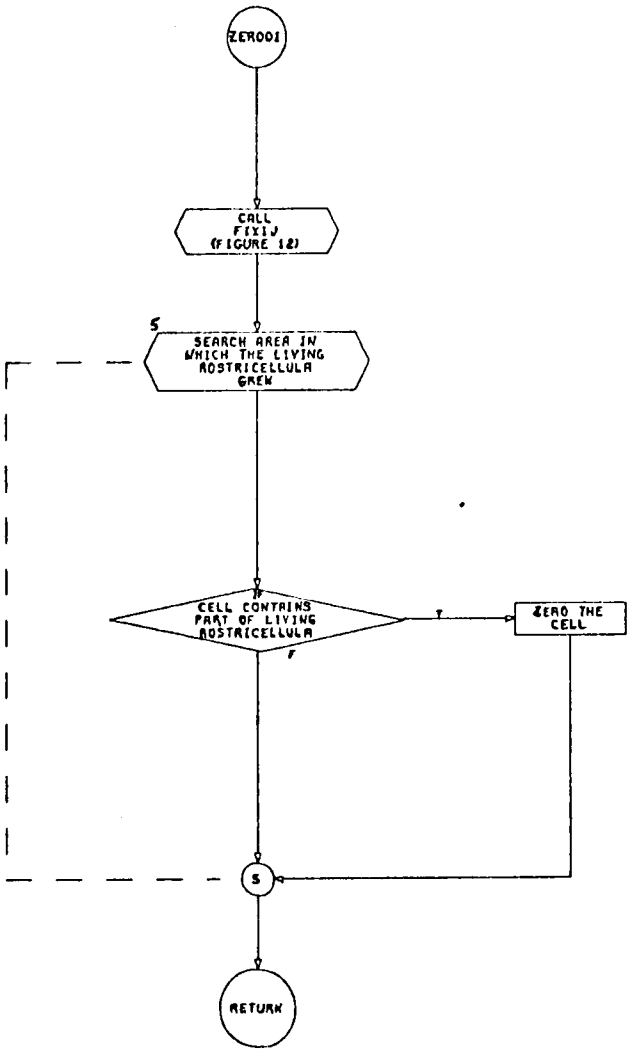

Figure 13. Flowchart of the subroutine ZER001.

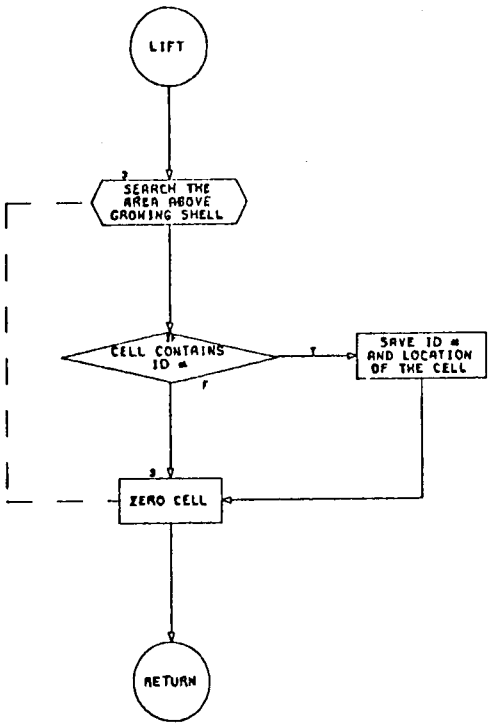

Figure 14. Flowchart of the subroutine LIFT.

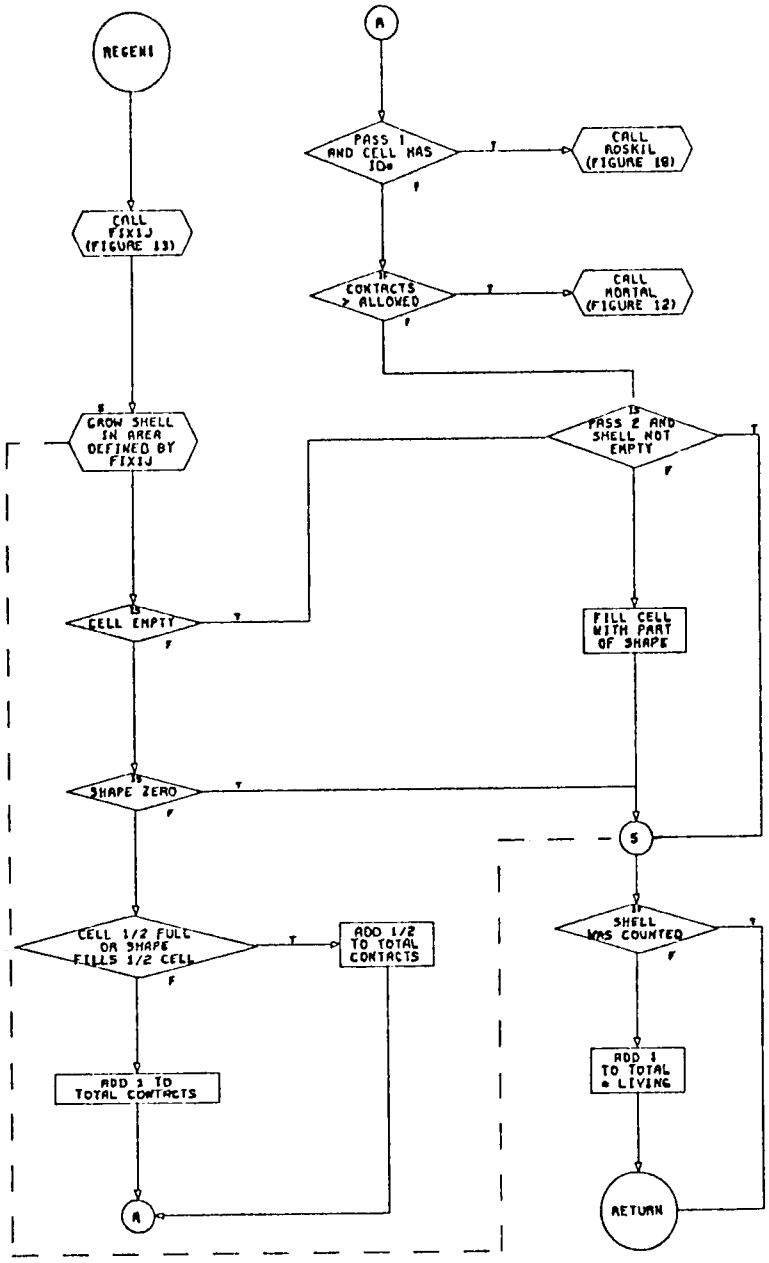

Figure 15. Flowchart of the subroutine REGEN1.

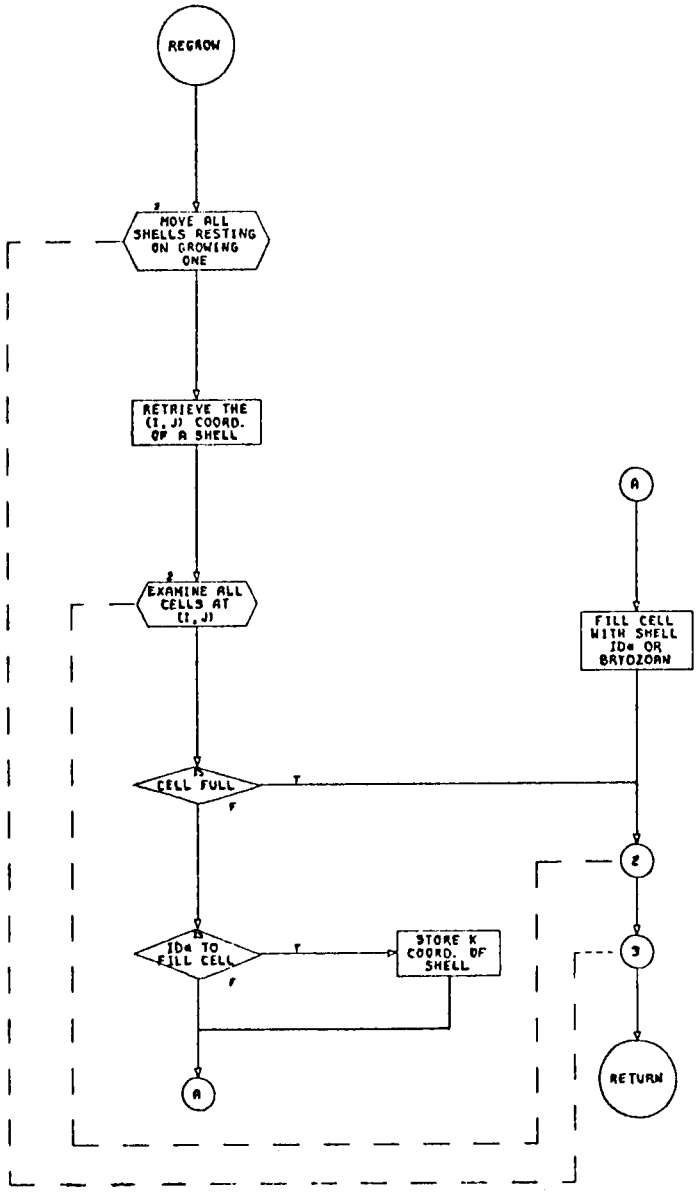

Figure 16. Flowchart of the subroutine REGROW.

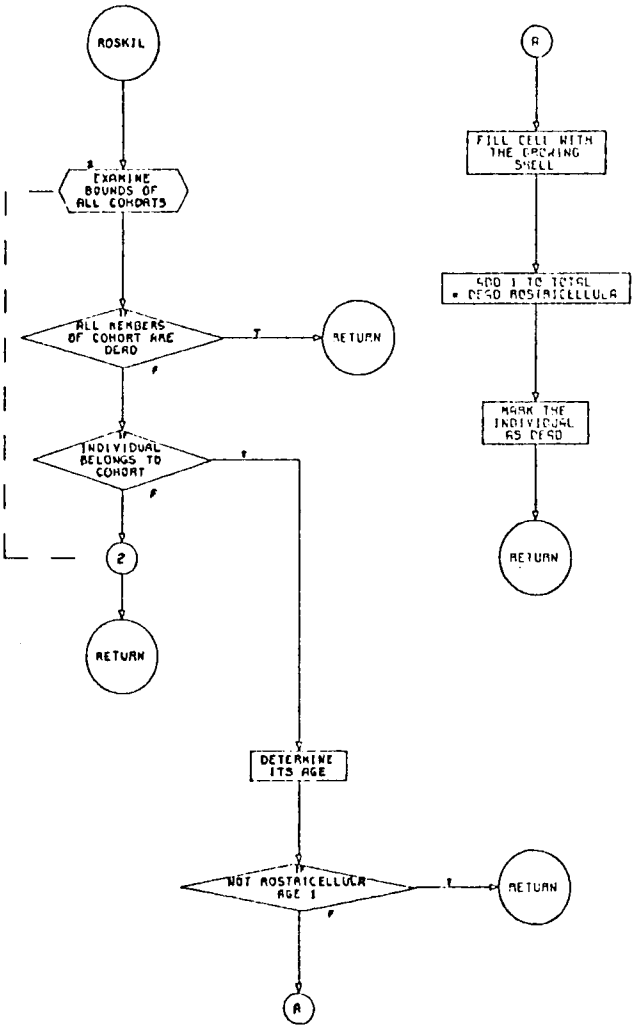

Figure 17. Flowchart of the subroutine ROSKIL.

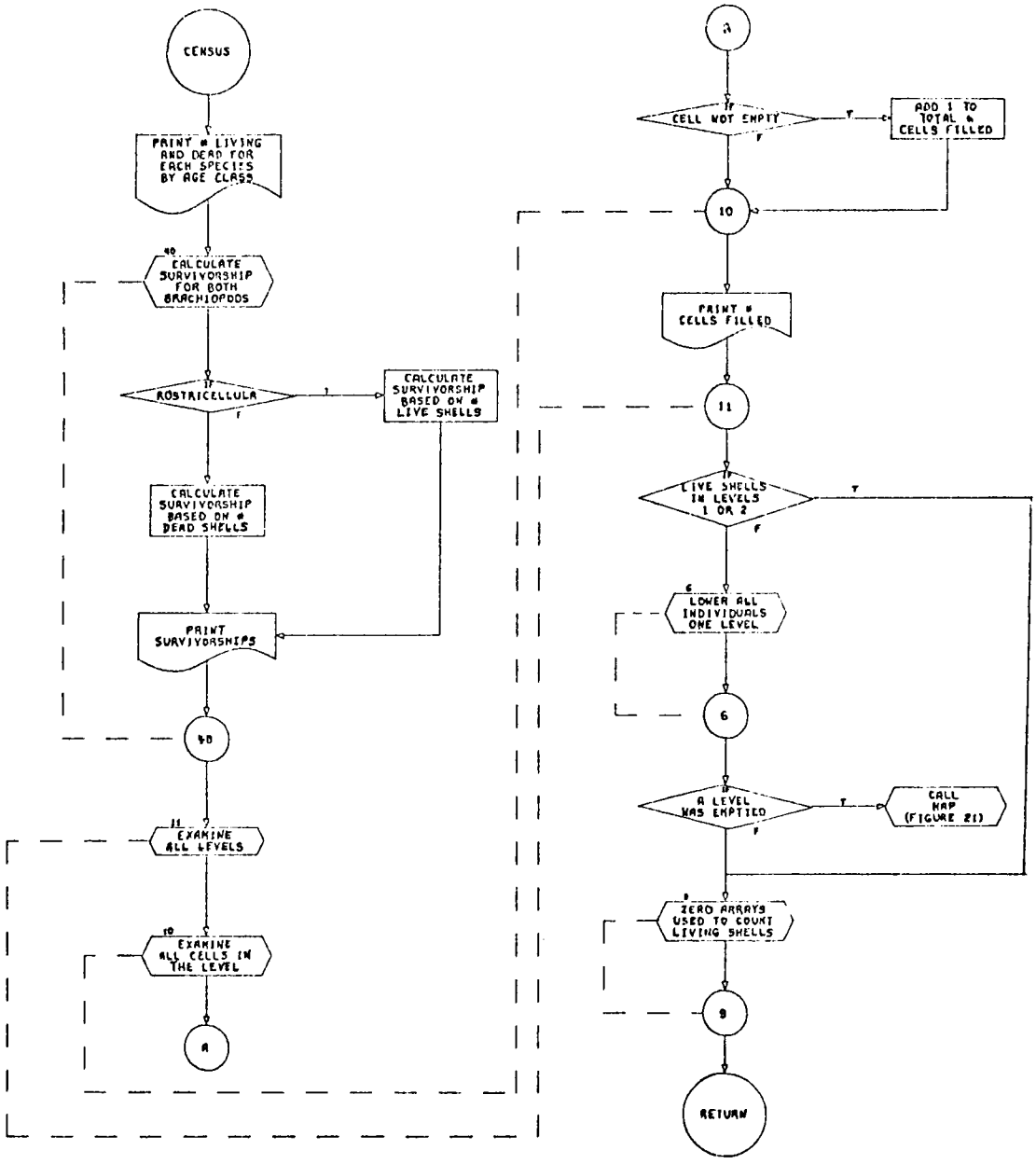

Figure 18. Flowchart of the subroutine CENSUS.

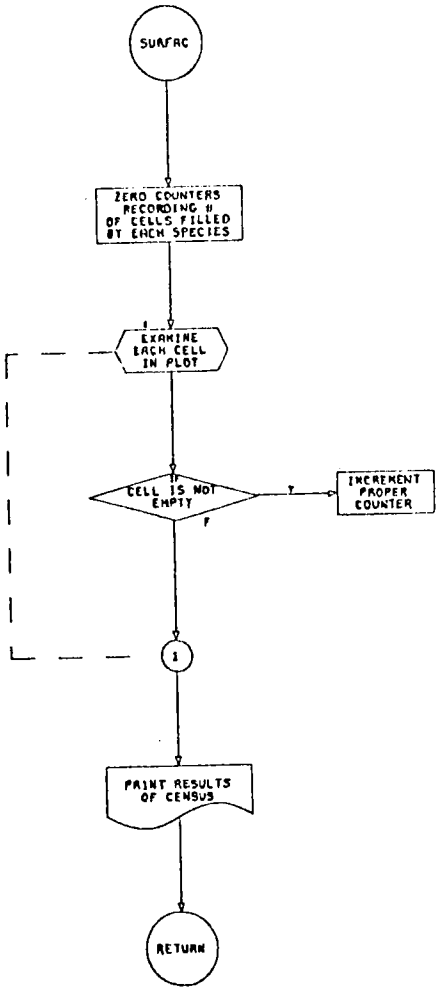

Figure 19. Flowchart of the subroutine SURFAC.

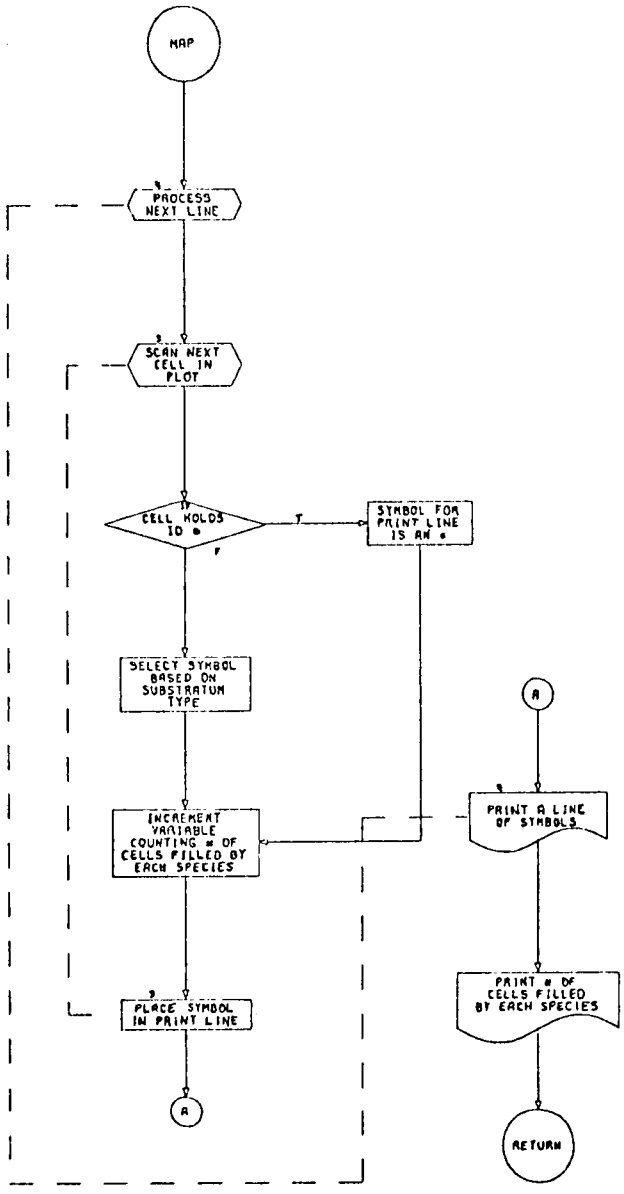

Figure 20. Flowchart of the subroutine MAP.

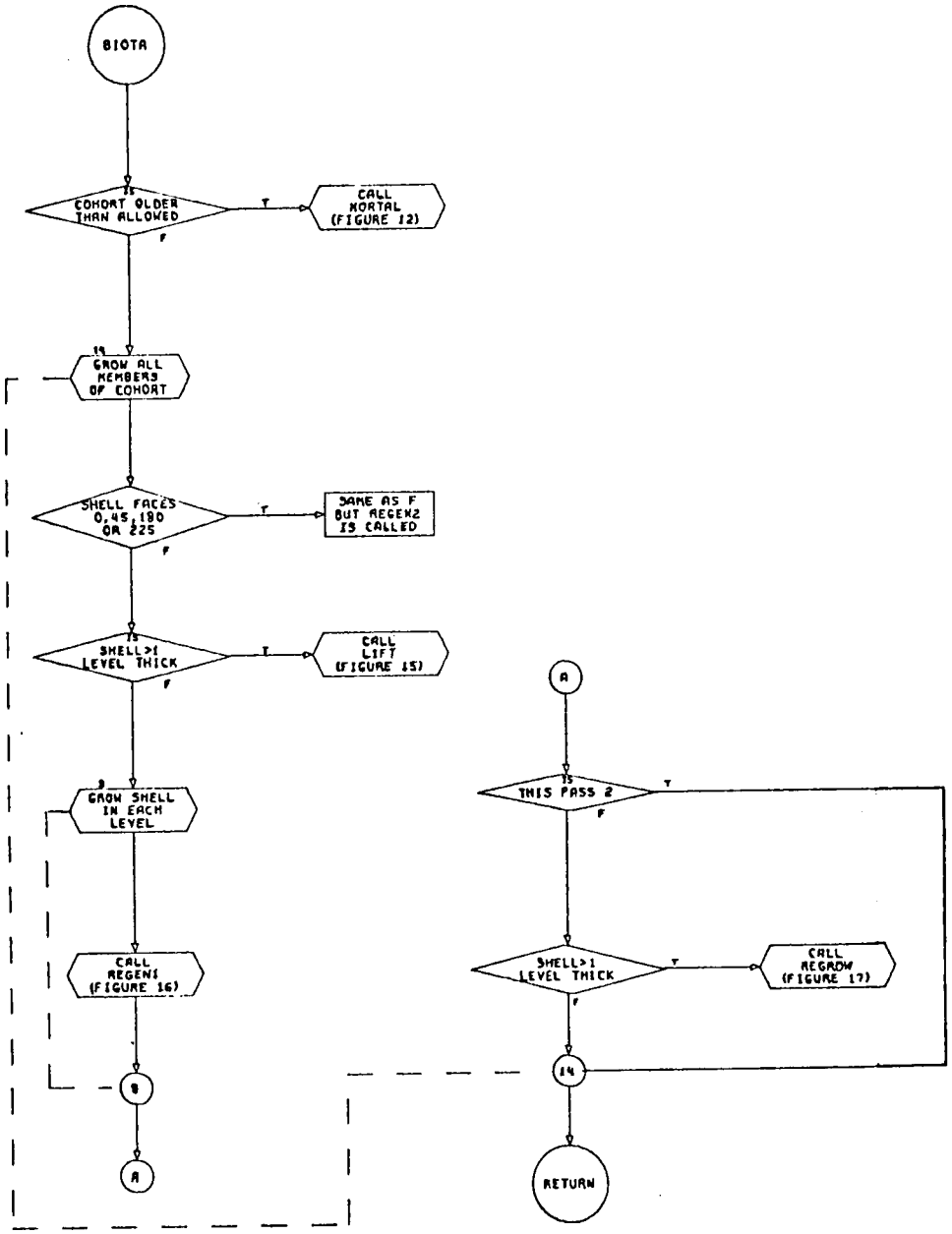

Figure 21. Flowchart of the subroutine BIOTA.

VI. MODEL STRUCTURE

Two possibilities were considered for larval settlement: (1) larvae preferentially settled in lighted areas, and (2) illumination made no difference to larvae in selecting a settling site. Indifference to lighting conditions appears to be least likely because denser clusters of individuals are predicted by the model than are observed on the limestone slabs.

The order in which the larvae of different species settle in the plot each year does not affect the model's output. Since, in the model, a larva does not secrete its shell until after the first year of growth, no larvae are capable of serving as substrata for larvae which settle later that year. Thus, the Stictopora larvae which settle after the Strophomena larvae each year are neither benefitted nor harmed by the Strophomena larvae which settled earlier in the plot.

VII. SENSITIVITY ANALYSIS

The number chosen as the seed of the pseudorandom number generator RANDU (that is the starting point) subsequently determines all events which occur during a given run of the model. Each seed produces a unique sequence of events and a particular arrangement of skeletal debris. These arrangements of skeletal debris produced by the simulation represent various limestone slabs from the same bedding plane.

The initial choice of input data was modified for various runs of the model in such a way that the output obtained with seed 65549 matched survivorship curves in Walker and Parker (1976) and peels from a limestone slab containing the community (see table 3). This experimental process sometimes termed "tuning the model," produced results which were valid for only one ten by ten inch plot. Applicability of the model in other situations may be obtained by tuning the model with a large number of different seeds for RANDU.

Table 3

Comparison of the Percent Areas Occupied by the Three Species in Peels of a Limestone Slab and Two Levels of the Model

	Level	Strophomena %	Rostricellula %	Stictopora %
Peel	1	50	35	15
Model	1	46	34	20
Peel	2	31	38	21
Model	2	38	39	23

Since one seed was used to tune the model it was important to determine how much variation was introduced in the model results by the use of different seeds. To this end twenty-five runs were made with identical parameters of larval production and tolerance to crowding but with different seeds. Figures 22 and 23 illustrate the effects of using different seeds on the survivorship of the two brachiopod species. Shaded areas in both figures are regions of reasonable values for the numbers of survivors in an age class in the populations studied by Walker and Parker (1976). Since survivorship varies from year to year for each age class, the model was tuned so that, in the period of time corresponding to the stage of succession from which Walker and Parker (1976) collected their populations, the survivorships produced by the model matched the published survivorships as closely as possible. Year eleven was selected as the year in which the model survivorships were compared with the published curves for Strophomena basilica. The match between the model and published survivorship was very good (figures 24 and 25) for the seed 65549. However, when the results of all twelve runs were examined, it was apparent that most of the runs produced survivorships in the fourth age class that fell outside of the reasonable limits on survivorship calculated for that age class (see table 4). This suggested that further tuning of the model is necessary to take into account the variation between different plots.

The values of the parameters, tolerance to crowding and rate of larval production, which produced the best match between the

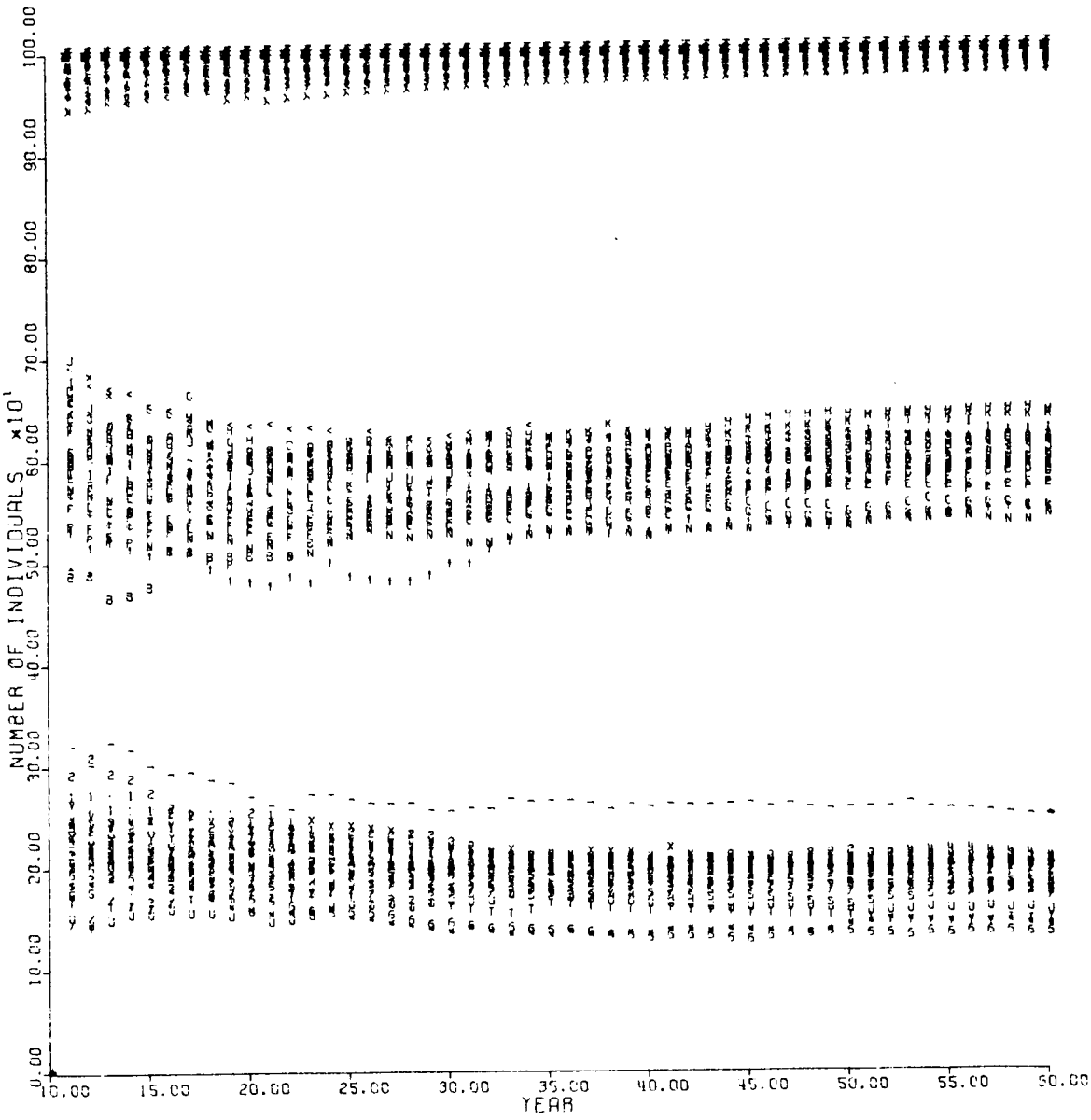

Figure 22. Plot of years 11 through 60 in the succession versus survivorship in the age classes of the Strophomena population. Survivorship in any year was calculated from the proportion of dead individuals in each age class of the time averaged population. Twenty-nine runs of the model were made which differed from the run which best matched published survivorships only in the choice of the seed for RANDU.

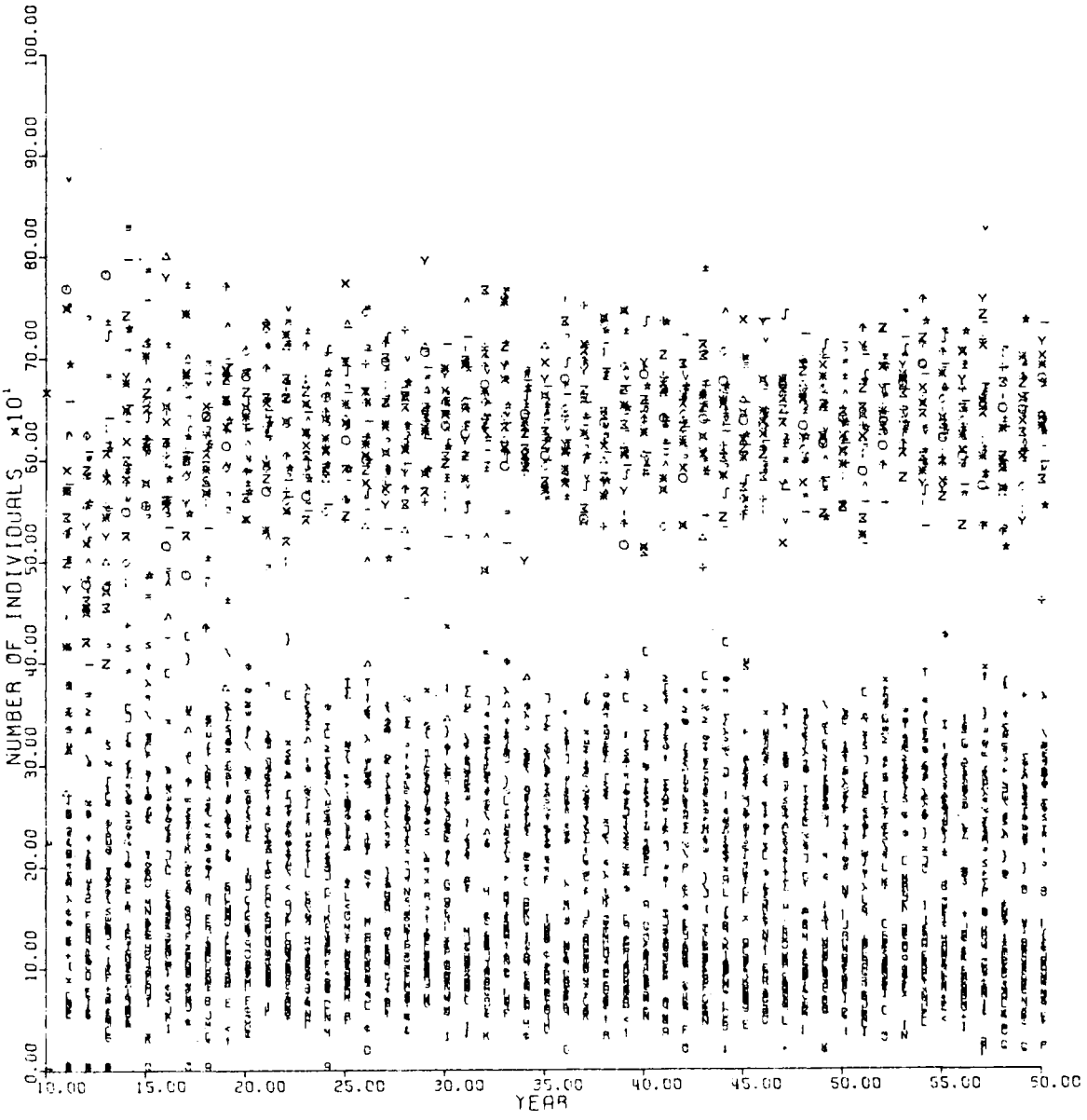

Figure 23. Plot of years 11 through 60 in the succession versus survivorship in the three age classes of the Rostricellula population. Survivorship in any year was calculated from the proportion of living individuals in the population. Twenty-nine runs of the model were made which differed from the run which best match published survivorships only in the seed for RANDU.

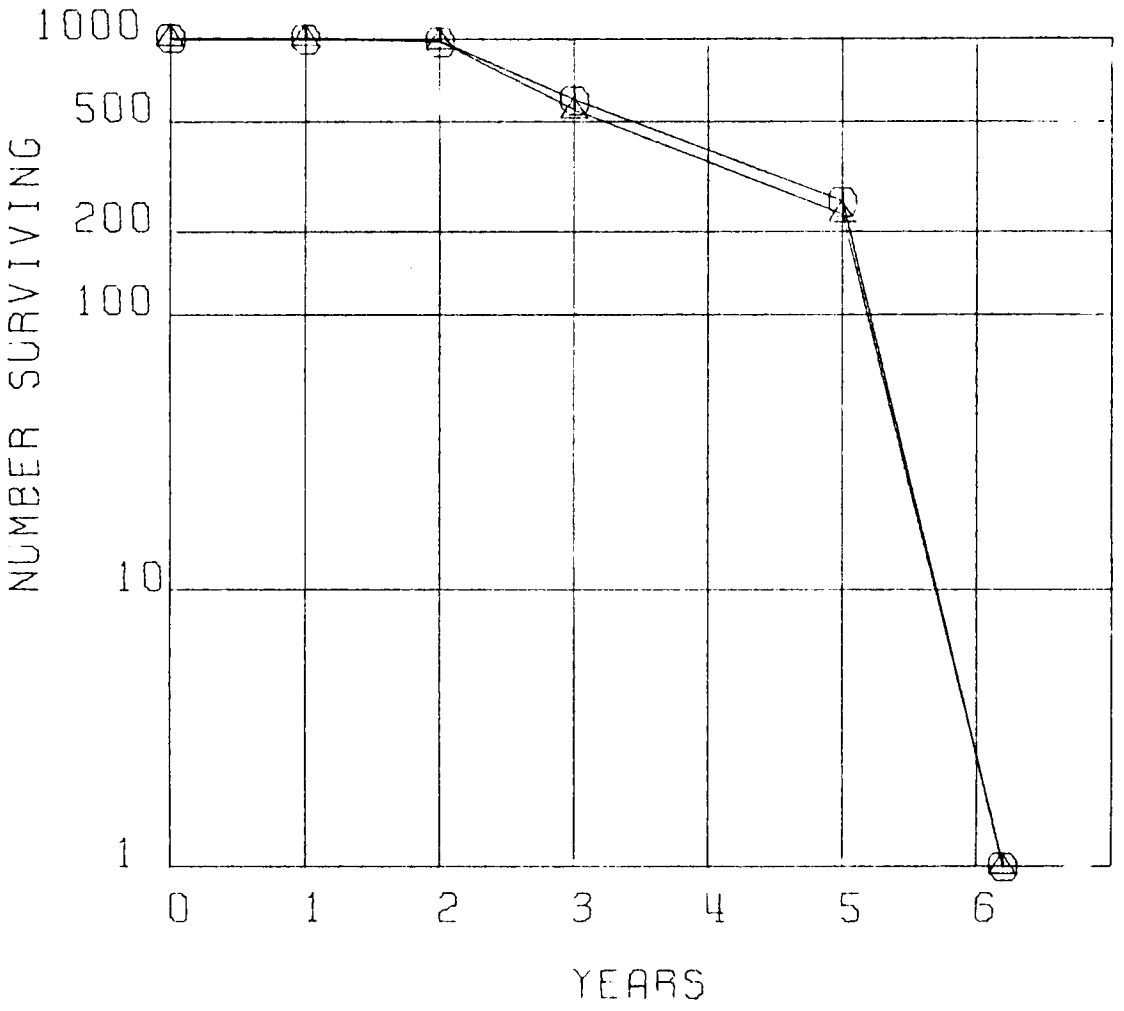

Figure 24. Survivorship curve for Strophomena basilica. Octagons represent published values from Walker and Parker (1976) and triangles are the survivorships produced by the model.

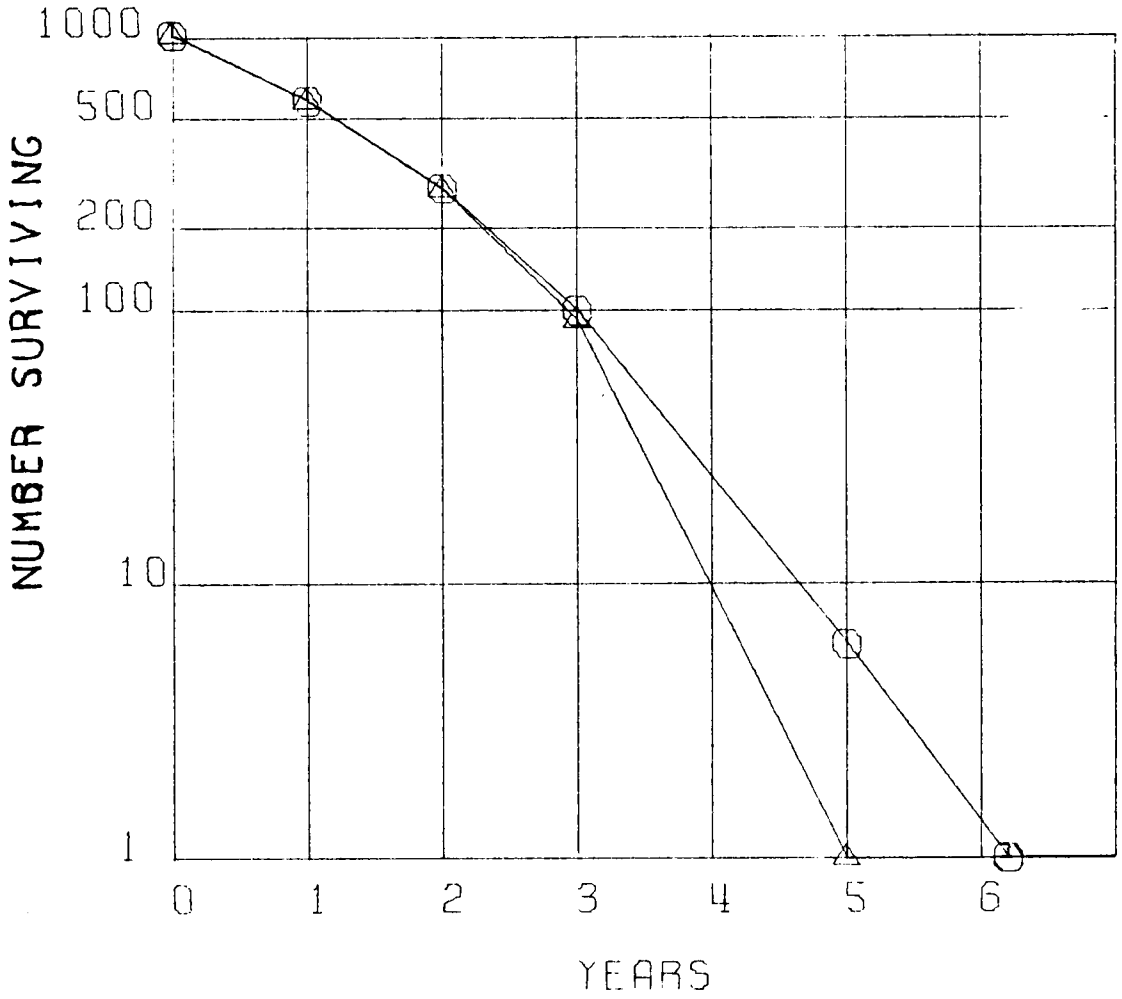

Figure 25. Survivorship curve for Rostricellula rostrata. Octagons represent published values from Walker and Parker (1976) and triangles are the survivorships produced by the model.

Table 4

Comparison of Published Survivorships and Survivorship Curves Produced by the Model at Year 11 for Strophomena Populations and at Year 40 for Rostricellula. Acceptable Ranges of Survivorship for the Published Curves are Based on a Reinterpretation of the Data Presented by Walker and Parker (1976) (see Table 20).

Age	Acceptable Range	Walker and Parker Survivorship	Model Survivorship	Difference	% Diff.
			Strophomena		
0-1		989	1000	11	1
1-2	915-977	966	965	1	0
2-3	508-672	593	544	49	8
3-4	232-305	254	223	26	10
			Rostricellula		
0-1	542-621	577	576	1	0
1-2	296-316	276	273	3	1
2-3	91-130	99	91	8	8

model's output and studies of the fossil populations are presented in tables 5 and 6. The tolerance to crowding in the first age class of both brachiopod populations was set equal to the size of the brachiopod's shell. Decreasing the tolerance to crowding in this age class resulted in mortalities which were higher than those reported in Walker and Parker (1976). This suggests that some other factor was responsible for the mortalities observed in the first age class. In the model individuals of Strophomena basilica can survive very crowded conditions. However, Strophomena shells in the fossil assemblage do not show the deformed shell margins which would result if shells continued to grow after their margins were in contact. In the model expanding the size of feeding currents could produce brachiopod deaths without two shells actually coming into contact along their margins. In contrast to the relatively low variation in Strophomena survivorships, Rostricellula survivorships vary over a broad range. Some seeds produce runs in which there is nearly constant survivorship in an age class. In other runs large oscillations in survivorship occur (see figure 22, page 45). The large stochastic variation in survivorship between different runs is due to the way in which survivorships are calculated for this species. Since Walker and Parker (1976) only measured articulated Rostricellula shells their survivorship curves are only valid for a census of an assemblage of shells containing the living Rostricellula population and the shells of individuals which died no later than four years before the mud influx. The smaller population size reflects short term variation

Table 5

Values of an Individual's Tolerance to Crowding in the Run Whose Output Best Matched the Published Survivorship from Walker and Parker (1976).

	Age 1	Age 2	Age 3	Age 4
	Strophomena basilica population			
Maximum overlap that can occur before death*	3	20	29	25
Total number of cells filled by the brachiopod	3	25	66	190
	Rostricellula rostrata population			
Maximum overlap that can occur before death*	1	3	6	
Total number of cells filled by the brachiopod	1	7	29	

*Overlap is defined as the number of cells an individual shares.

Table 6

Number of Larvae Produced Each Year by the Three Species in the Run Which Best Matched Published Survivorships

	Strophomena Larvae	*Rostricellula* Larvae	*Stictopora* Larvae
Number	15	75	60

in survivorship far more strongly than does the large "time averaged" population of the fossil deposit, resulting in larger fluctuations of survivorship between different years. When Rostricellula population survivorships are calculated like the survivorships for the Strophomena basilica population, i.e., based on the time average fossil deposit, much of the variation in survivorships within a run and between runs is removed. However, since the data from the fossil record is based on populations which were killed by the mud influxes, one must use the present method of calculating survivorship for Rostricellula and accept the high degree of variability in survivorship. This characteristic of Rostricellula populations and the small size of Rostricellula individuals makes tuning the model to match Rostricellula survivorships in year forty difficult.

To determine the sensitivity of the model's output to small changes in the rates of larval production and the amount of crowding individuals could survive, different runs of the model were made with a parameter raised or lowered by 20 percent of its value in the run which best matched the published survivorships from Walker and Parker (1976).

Varying the amount of crowding individuals could survive brought about the greatest changes in the survivorship of the Rostricellula and Strophomena populations. Survivorship varied by as much as 35 percent in these populations when 20 percent changes were made in the amount of crowding an individual could survive (tables 7 and 8). The largest variations in survivorship occurred when the tolerance

Table 7

Mean Survivorship and Confidence Limits for *Strophomena* Age Classes with 20 Percent Changes in the Tolerance of *Strophomena* Age Classes to Crowding

Age	Lower Limit	Mean	Upper Limit	Lower Limit	Mean	Upper Limit
	All *Strophomena* Age Classes Up 20%			All *Strophomena* Age Classes Down 20%		
1	1000	1000	1000	986	987	988
2	1000	1000	1000	892	895	898
3	698	705	712	443	447	451
4	254	257	260	144	146	148
	Strophomena Age Class 1 up 20%*			*Strophomena* Age Class 1 Down 20%		
1	1000	1000	1000	980	981	982
2	981	984	985	958	960	962
3	579	581	583	548	555	562
4	193	194	195	176	180	184
	Strophomena Age Class 2 Up 20%			*Strophomena* Age Class 2 Down 20%		
1	1000	1000	1000	1000	1000	1000
2	1000	1000	1000	895	897	899
3	560	565	570	572	579	587
4	199	202	205	192	196	200
	Strophomena Age Class 3 Up 20%			*Strophomena* Age Class 3 Down 20%		
1	1000	1000	1000	1000	1000	1000
2	977	979	981	975	977	979
3	708	713	718	460	464	468
4	204	208	212	180	183	186
	Strophomena Age Class 4 Up 20%			*Strophomena* Age Class 4 Down 20%		
1	1000	1000	1000	1000	1000	1000
2	895	897	899	985	986	987
3	572	579	587	598	606	614
4	192	196	200	161	165	169

*This set of runs does not differ from the runs made with parameters set to the values used in the run which best matched published survivorship. The mean and confidence limits were calculated from the results of twenty-nine runs instead of five.

Table 8

Mean Survivorships and Confidence Limits for Rostricellula Age Classes with 20 Percent Changes in the Tolerance of Rostricellula Age Classes to Crowding

Age	Lower Limit	Mean	Upper Limit	Lower Limit	Mean	Upper Limit
		All Rostricellula Age Classes up 20%			All Rostricellula Age Classes Down 20%	
1	642	671	700	481	510	539
2	335	364	393	263	293	323
3	70	84	98	88	110	132
		Rostricellula Age Class 1 Up 20%			Rostricellula Age Class 1 Down 20%	
1	603	628	653	503	533	560
2	250	274	298	284	319	354
3	90	105	120	100	125	150
		Rostricellula Age Class 2 Up 20%			Rostricellula Age Class 2 Down 20%	
1	644	670	696	589	613	637
2	335	361	387	227	247	267
3	67	80	93	81	96	111
		Rostricellula Age Class 3 Up 20%			Rostricellula Age Class 3 Down 20%	
1	597	623	649	591	616	641
2	246	270	294	228	252	276
3	84	100	116	71	87	103

of individuals in that age class to crowding was raised or lowered. However, an increase or decrease of survivorship brought about a corresponding rise or fall of survivorship in older age classes. Changes in the ability of individuals of one brachiopod species to withstand crowding had little effect on the survivorship of the other brachiopod species (see tables 9 and 10). Additionally, in general, changes in the rate of larval production did not appreciably affect the survivorship of any brachiopod population (see tables 11 and 12). Thus, survivorship curves generated by the model were primarily a product of the tolerance of different ages in the two brachiopod populations to crowding.

Unlike survivorship, the size of the brachiopod populations in the forty-second year of the succession was not strongly influenced by the tolerance of individuals to crowding (see tables 13 and 14). Larval production was the primary factor which governed population size. In Strophomena basilica population size was a function solely of the number of Strophomena larvae entering the plot each year (table 15). Rostricellula rostrata numbers, however, were dependent on the size of the Stictopora population (see table 15) which in turn depended on the Strophomena shells for settling sites early in the succession.

The rate of limestone deposition in the model was most sensitive to changes in the rates of larval production of the three species (see table 16). Strophomena basilica numbers most strongly affected the thickness of the limestone deposit at year forty-two. This was due to the large percent of total biovolume that was Strophomena

Table 9

Mean Survivorship and Confidence Limits for Rostricellula Age Classes with 20 Percent Changes in the Tolerance of Strophomena Age Classes to Crowding

Age	Lower Limit	Mean	Upper Limit	Lower Limit	Mean	Upper Limit
	All Strophomena Age Classes Up 20%			All Strophomena Age Classes Down 20%		
1	613	624	635	608	620	632
2	252	263	274	251	261	271
3	93	100	107	92	99	106
	Strophomena Age Class 1 Up 20%*			Strophomena Age Class 1 Down 20%		
1	622	625	628	500	517	534
2	250	263	276	225	237	249
3	94	99	104	13	20	27
	Strophomena Age Class 2 up 20%			Strophomena Age Class 2 Down 20%		
1	507	524	541	502	519	536
2	233	246	259	230	242	254
3	53	60	67	12	19	26
	Strophomena Age Class 3 Up 20%			Strophomena Age Class 3 Down 20%		
1	525	529	533	505	522	539
2	231	244	257	226	243	260
3	12	19	25	15	22	29
	Strophomena Age Class 4 Up 20%			Strophomena Age Class 4 Down 20%		
1	515	531	547	513	527	541
2	229	242	255	233	243	254
3	15	22	29	14	21	28

*This set of runs does not differ from the runs made with parameters set to the values used in the run which best matched published survivorship. The mean and confidence limits were calculated from the results of twenty-nine runs instead of five.

Table 10

Mean Survivorships and Confidence Limits for *Strophomena* Age Classes with 20 Percent Changes in the Tolerance of *Rostricellula* Age Classes to Crowding

Age	Lower Limit	Mean	Upper Limit	Lower Limit	Mean	Upper Limit
	All *Rostricellula* Age Classes Up 20%			All *Rostricellula* Age Classes Down 20%		
1	1000	1000	1000	1000	1000	1000
2	979	981	983	980	982	984
3	537	548	559	525	534	543
4	169	174	179			
	Rostricellula Age Class 1 Up 20%			*Rostricellula* Age Class 1 Down 20%		
1	1000	1000	1000	1000	1000	1000
2	968	970	972	984	986	988
3	522	534	546	512	517	522
4	185	189	193	181	185	189
	Rostricellula Age Class 2 Up 20%			*Rostricellula* Age Class 2 Down 20%		
1	1000	1000	1000	1000	1000	1000
2	977	979	981	970	973	976
3	533	541	549	514	523	532
4	158	165	172	177	182	187
	Rostricellula Age Class 3 Up 20%			*Rostricellula* Age Class 3 Down 20%		
1	1000	1000	1000	1000	1000	1000
2	966	968	970	971	974	977
3	502	507	513	494	498	512
4	179	184	189	165	172	180

Table 11

Mean Survivorship and 95 Percent Confidence Limits for *Strophomena* Age Classes with 20 Percent Changes in the Larval Production of the Three Species

Age	Lower Limit	Mean	Upper Limit	Lower Limit	Mean	Upper Limit
	Larval Production Up for All Species by 20%			Larval Production Down for All Species by 20%		
1	1000	1000	1000	1000	1000	1000
2	946	948	950	995	996	997
3	536	543	550	631	643	655
4	183	186	189	260	271	282
	Strophomena Larval Production Up 20%			*Strophomena* Larval Production Down 20%		
1	1000	1000	1000	1000	1000	1000
2	972	974	976	990	991	992
3	578	581	584	621	625	629
4	219	226	233	189	196	203
	Rostricellula Larval Production Up 20%			*Rostricellula* Larval Production Down 20%		
1	1000	1000	1000	1000	1000	1000
2	987	988	989	992	993	994
3	565	570	575	519	524	529
4	242	248	254	187	196	205
	Stictopora Larval Production Up 20%			*Stictopora* Larval Production Down 20%		
1	1000	1000	1000	1000	1000	1000
2	955	958	961	981	982	983
3	609	616	623	544	552	560
4	216	224	232	202	207	212

Table 12

Mean Survivorship and 95 Percent Confidence Limits for *Rostricellula* Age Classes with 20 Percent Changes in the Larval Production of the Three Species

Age	Lower Limit	Mean	Upper Limit	Lower Limit	Mean	Upper Limit
	Larval Production Up for All Species by 20%			Larval Production Down for All Species by 20%		
1	588	611	634	578	617	656
2	220	242	264	229	263	297
3	72	87	102	84	104	124
	Strophomena Larval Production Up 20%			*Strophomena* Larval Production Down 20%		
1	594	622	650	596	622	648
2	234	260	286	242	263	284
3	86	105	124	76	95	114
	Rostricellula Larval Production Up 20%			*Rostricellula* Larval Production Down 20%		
1	590	615	640	596	621	642
2	229	251	273	235	257	279
3	80	94	108	84	100	116
	Stictopora Larval Production Up 20%			*Stictopora* Larval Production Down		
1	585	611	637	585	628	671
2	221	246	271	239	264	289
3	78	92	106	92	107	122

Table 13

Variations in the Number of Individuals of Each Species in the Model at Year 42 with Changes in Strophomena Age Classes' Tolerance to Crowding

Age Class	Strophomena #'s	Rostricellula #'s	Stictopora #'s
1 up 20%			
2 up 20%	231	330	1293
3 up 20%	232	323	1312
4 up 20%	242	291	1359
All up 20%	229*	268*	1269*
1 down 20%	201	324	1276
2 down 20 %	223*	335*	1200*
3 down 20%	241	349	1359
4 down 20%	231	332	1273
All down	225	342	1320

* Number of individuals was taken from year 40 in runs of the model where year 42 was not reached.

Table 14

Variations in the Number of Individuals of Each Species in the Model at Year 42 with Changes in Rostricellula Age Classes' Tolerance to Crowding

Age Class	Strophomena #'s	Rostricellula #'s	Stictopora #'s
1 up 20%	227	353	1287
2 up 20%	208	412	1156
3 up 20%	219	369	1274
All up 20%	210	283	1089
1 down 20%	248	307	1356
2 down 20%	237	325	1303
3 down 20%	230	338	1308
All down 20%	255	272	1364

Table 15

Variations in the Number of Individuals of Each Species in the Model at Year 42 with Changes in the Rate of Larval Production for the Three Species

Larval Production	*Strophomena* #'s	*Rostricellula* #'s	*Stictopora* #'s
Up for *Strophomena*	301	319	1382
Up for *Rostricellula*	243	348	1319
Up for *Stictopora*	227	366	1582
Up for All Species	290	414	1585
Down for *Strophomena*	180	321	1151
Down for *Rostricellula*	241	271	1313
Down for *Stictopora*	253	269	1059
Down for All Species	217	214	1040

Table 16

Thickness of the Limestone Bed at Year 42 for Different Runs in Which Each Species' Tolerance to Crowding Was Varied by 20 Percent of Its Value in the Run Which Best Matched Published Survivorships from Walker and Parker (1976)

Variations in Tolerance to Crowding	Thickness of Limestone in Inches
Strophomena all ages up 20%	0.9
Strophomena age 1 up 20%	0.8
Strophomena age 2 up 20%	0.8
Strophomena age 3 up 20%	0.8
Strophomena age 4 up 20%	1.0
Strophomena all ages down 20%	0.7
Strophomena age 1 down 20%	0.7
Strophomena age 2 down 20%	0.7
Strophomena age 3 down 20%	0.8
Strophomena age 4 down 20%	0.8
Rostricellula all ages up 20%	0.7
Rostricellula age 1 up 20%	0.7
Rostricellula age 2 up 20%	0.7
Rostricellula age 3 up 20%	0.7
Rostricellula all ages down 20%	0.7
Rostricellula age 1 down 20%	0.7
Rostricellula age 2 down 20%	0.7
Rostricellula age 3 down 20%	0.8
All ages up 20% for both species	0.8
All ages down 20% for both species	0.7

shells during early stages of the succession and the role Strophomena shells play in preparing the plot for colonization by other species. Rostricellula and Stictopora contribute significant amounts of material to the shell deposit in late stages of succession and by year forty-two variations in Stictopora and Rostricellula larval production influence the thickness of the limestone deposit. Inasmuch as its ability to withstand crowded conditions was a factor in how large an individual brachiopod grew, changes in the tolerance to crowding of each species affected the thickness of the limestone bed (see table 17).

One important aspect of the relationship between larval production and the size of the fossil population was the inhibiting effect that increasing the rate of larval production of one brachiopod species had on the population growth of the other species. Figure 26 illustrates the decline of a Strophomena basilica population and the corresponding increase in the size of a Rostricellula rostrata population during the succession. The reason for the inverse relationship between the two populations lies in the type of substratum larvae of each species settled upon. Strophomena larvae did not settle on Rostricellula shells. So at a low rate of larval production the Strophomena population declined rapidly as the plot was covered with Rostricellula shells. Rostricellula rostrata larvae settled preferentially on dead Stictopora colonies. When Strophomena basilica larval production was high, Strophomena shells covered most of the plot depriving many Rostricellula larvae of settling sites. Thus the rate of larval production determined to a large degree which brachiopod species was the most abundant in the community.

Table 17

Thickness of the Limestone Bed after Forty-Two Years of the Succession for Variations in the Larval Production of the Three Species

Variations	Thickness of Limestone in Inches
Strophomena larval production up 20%*	1.0
Rostricellula larval production up 20%	0.9
Stictopora larval production up 20%	0.9
Larval production of all species up 20%	1.1
Strophomena larval production down 20%	0.8
Rostricellula larval production down 20%	0.8
Stictopora larval production down 20%	0.8
Larval production of all species down 20%	0.8

*Up 20 percent means that the value for larval production is 20 percent higher than it was in the run which best matched published survivorships.

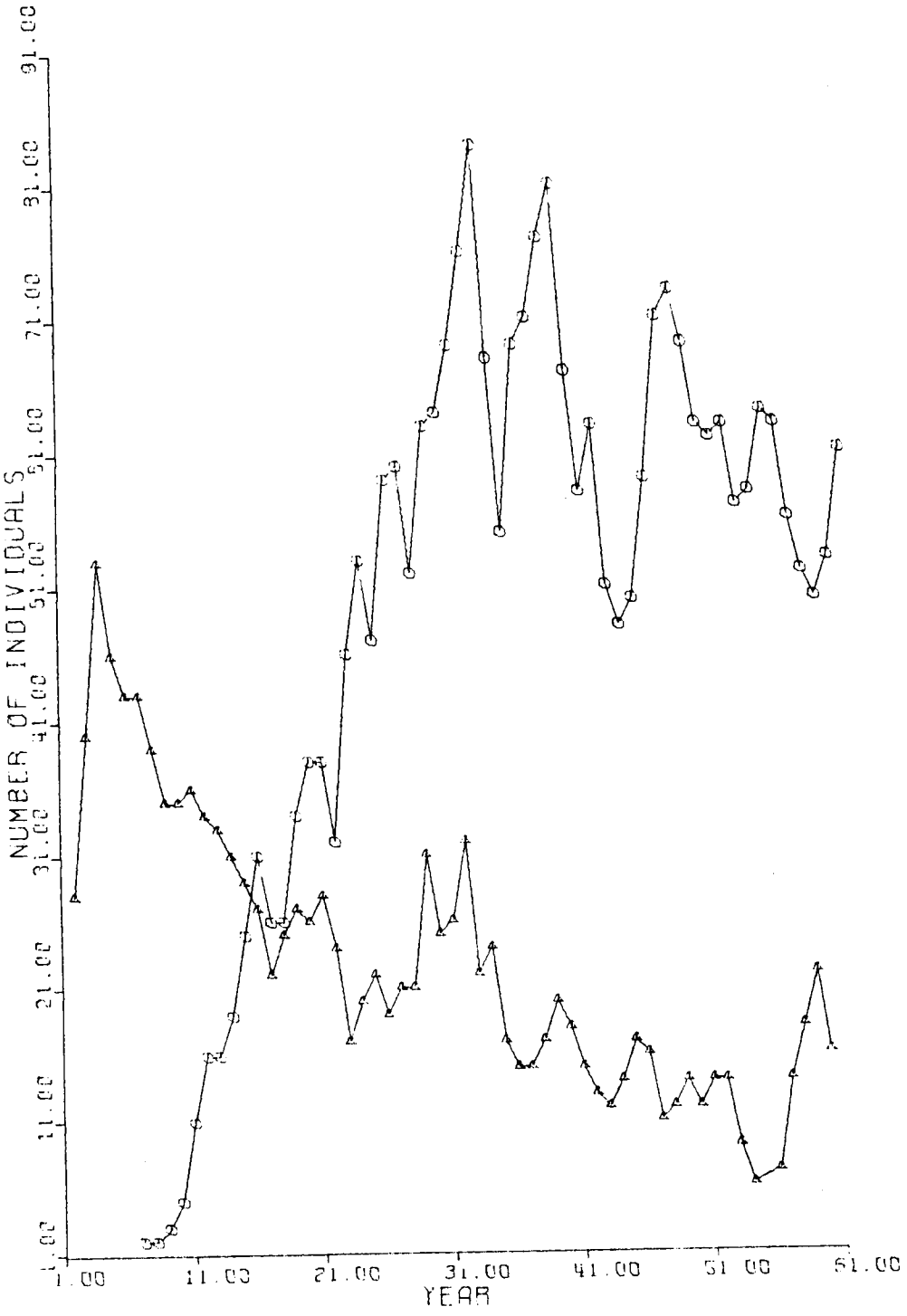

Figure 26. Plot of the number of living individuals for both brachiopod species during a run of the model tuned to match the fossil populations' survivorship curves. Triangles are for Strophomena population and octagons are for the Rostricellula population.

As illustrated in figure 22, page 45, and figure 23, page 46, the survivorship curve for each species changes from year to year in the succession and the degree to which the survivorship curves of the model match published survivorship curves depends on the year in the model one chooses to compare with the published curves. One is constrained in the choice of years by the method of collecting populations of the two species studied by Walker and Parker (1976). Strophomena basilica populations used to construct the survivorship curve came mostly from the bottoms of limestone slabs representing the early stages in the succession. Year eleven in the simulation was chosen because it was early in the succession and yet late enough to allow the number of large Strophomena shells to build up to the density observed on the bottom of slabs. The Rostricellula rostrata population collected by Walker and Parker came predominantly from the tops of limestone slabs and largely represented a census of articulated shells. The fossil assemblage on the surface of the slabs accumulated over a relatively short period of time, four to five years based on simulation results. In this assemblage some of the shells were disarticulated. These shells which died before the muds killed the remainder of the population were excluded from Walker and Parker's (1976) data. Since the total time represented by the upper surfaces of the slabs was short and some shells which died in this interval before mud influx are excluded from the data in Walker and Parker (1976), the study by Walker and Parker (1976) is close to being a census of the living Rostricellula population which was catastrophically buried by muds.

Year forty was chosen as the point at which to compare Rostricellula mortalities in the model with published survivorship curves because the Rostricellula-Stictopora community is firmly established in the plot at this point.

A comparison of the model with published survivorship curves is more meaningful to the reader when confidence limits are provided with the published curves. The method employed by Walker and Parker (1976) of separating different age classes in a population by the midpoints between prominent peaks in a three by three moving average of final length and length to growth line data seems the most reasonable method for recognizing individual age classes. However, in order to arrive at the widest reasonable bounds for survivorship in each age class survivorships for both species were recalculated by the writer, using the edges of valleys between prominent peaks. The results of these calculations appear in table 4, page 49.

As observed earlier in this paper the model's survivorship curves for the seed 65549 closely match published curves for the two brachipod species. The highest percent difference between the published curves and the curves porduced by the model occurred in age class four of the Strophomena population and amounted to only 10 percent. Table 4, page 49, summarizes the comparisons between the model and published survivorship curves.

The model's output was also checked against estimates of the area occupied by each of the three species in two acetate peels made parallel to the bedding planes of a limestone slab (see table 4, page 49).

The peels were spaced 0.2 inches apart and were compared with levels in the shell deposit produced by the model which were also 0.2 inches apart. The largest difference between the percent area a species occupied in the model and in the limestone slab was 8 percent for Stictopora debris while the smallest difference was 1 percent for Rostricellula areas. Finer tuning of the model to more closely match the relative abundances of each species in the peels was not undertaken because the margin of error associated with the estimation of areas individuals occupy in a peel was 5 percent (based on recounts of small patches of the two peels).

Counts of the area occupied by each species in the peels revealed that gastropods played a significant role in the late stages of the succession (see table 18). The Rostricellula-Stictopora community biovolumes presented in Walker and Alberstadt (1975) showed that Rostricellula rostrata dominated the climax community accounting for 42 percent of the biovolume. Stictopora blackensis was next with 30 percent and a pseudoplanispiral gastropod, Maclurites, had 11 percent of the total biovolume in the community. However, in the second peel of the limestone slab (see table 4, page 49) gastropods occupied the greatest area on the peel, 30 percent, followed by Stictopora blackensis with 23 percent and Rostricellula rostrata and Strophomena basilica with 19 percent. If the volume of the species were considered instead of area, Rostricellula would rank second in terms of biovolume. The failure of Walker and Alberstadt (1976) to accurately estimate the biovolume occupied by gastropods in the community was due to their

Table 18

Comparison of the Percent of Total Area Occupied by Different Taxa in the Two Peels

Taxon	Peel 2	Peel 6
Rostricellula rostrata	12	19
Strophomena basilica	38	19
Stictopora blackensis	27	23
Trepostome bryozoans	2	3
Trilobites	3	4
Gastropods	18	30
Ostracods	1	1

Pelmatozoans were also present but their plates and columnals were too small to allow an accurate determination of the area they covered in the peels.

method of censusing the community. Their data was drawn from the surfaces of slabs where gastropod shells were preferentially dissolved. The gastropods did not affect brachiopod mortality because they did not compete with the brachiopods for food or growing space. Further, there was no evidence, such as circular holes bored in brachiopod shells, to indicate that gastropods preyed on brachiopods. If the model was required to match the biovolume of all the species in the limestone slabs, then leaving gastropods out of the model would result in the depositional rate predicted by the model being slower than the true rate. However, the space occupied by gastropods in the limestones was equated with empty space in the model and the volume of shells in the skeletal deposit produced by the model was compared only with the volume occupied by Rostricellula, Stictopora and Strophomena in the limestone slab. Therefore, the effect of excluding gastropods from the model on the depositional rate was minimal.

VIII. RESULTS

Simulation results suggest that Strophomena basilica lacked the high fecundity which characterize opportunistic species (McArthur, 1960; Levinton, 1970; and Southwood, 1976). Runs of the model in which the number of larvae produced by Strophomena was one third the number of Rostricellula larvae produced the closest matches between the survivorship curves presented in Walker and Parker (1976) and those generated by the model. In addition to the low fecundity Strophomena basilica also lacked the high juvenile mortality and rapid growth rate which characterize r-selectionists (Walker and Parker, 1976, and Alexander, 1977).

Though it lacks the population dynamics of an r-selected species, Strophomena has the distributional features of an opportunist (Walker and Parker, 1976). "It appears in great abundance in thin monotypic shell beds in the Middle and Upper Ordovician throughout the eastern U.S." (Walker and Alberstadt, 1975) and is present in many Ordovician marine communities though in relatively small numbers. Thus Strophomena basilica satisfies three of Levinton's (1970) criteria for recognizing opportunists: (1) presence of the species in thin but widespread horizons, indicating brief invasions, (2) the species numerically dominates a fossil assemblage by 85 to 100 percent in numbers and (3) the species is found abundantly in several otherwise distinct faunal assemblages.

Perhaps it would be better to label Strophomena basilica a pioneering species, because opportunist carries with it connotations of r-selection, maximizing reproduction at the expense of fine tuning to an environment. Both Walker and Parker's study and this model have demonstrated that Strophomena basilica was not an opportunist in the sense of an r-selectionist. Instead it was a physiological generalist with a modest rate of growth and reproduction, which at the same time was superbly adapted for life in an environment where no other filter feeders could survive. As suggested by Walker and Alberstadt (1975), it was Strophomena basilica's adaptation for "floating" on soupy muds that accounted for its presence in shell beds where no other species occur. The study by Walker and Parker (1976) and the model's results point up the difficulty in recognizing an opportunistic species in the fossil record based solely on its mode of occurrence.

The model was also used to predict the length of different stages in the community succession. Walker and Alberstadt (1975) estimated that 15 to 35 percent of the plot was covered by Strophomena basilica shells before the first Stictopora colonies settled in the plot. In the model, 21 percent of the mud was covered by year five when the first Stictopora colonies settled in the plot (see figure 27). Four years later stage six in the succession was reached as Rostricellula larvae settled on Stictopora debris (see figure 28). During the sixteenth year after mud influx, patches of the plot were dominated by the Rostricellula-Stictopora community, corresponding to stage seven of

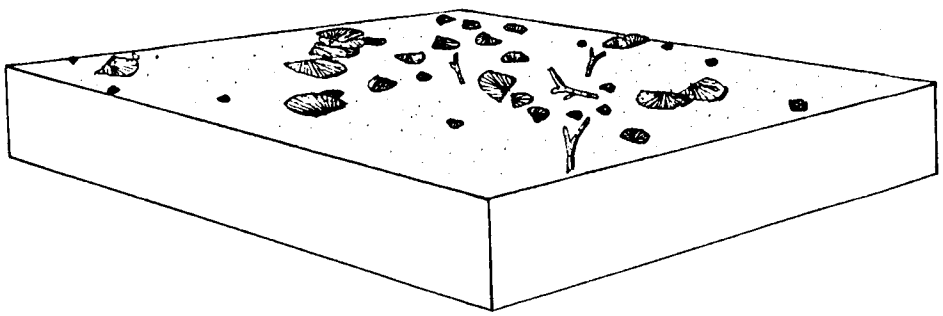

Figure 27. View of the plot in the fifth year after mud influx.

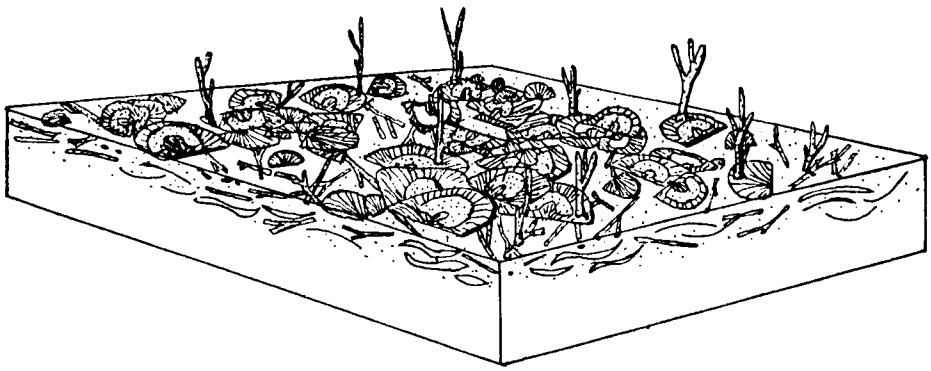

Figure 28. View of the plot in the ninth year after mud influx.

the Walker-Alberstadt model. When this community was established over all the plot in year twenty-four, the succession had reached Walker and Alberstadt's stage eight (see figure 29). However, the skeletal deposit did not reach the average thickness of limestone beds at the measured section until the fifty-fifth year, thirty-one years after the establishment of the climax community in the plot. The rapid establishment of the climax stage agrees with the observations in Walker and Alberstadt (1975) that limestone slabs of all thicknesses have the climax community on their upper surfaces.

Walker and Parker (1976) suggested that all short term cyclic successions may involve pulse stability in which the "community tends to be maintained at some intermediate point in the developmental sequence . . . by a more or less regular but acute physical perturbation from without" (Odum, 1969). On the surfaces of very thick limestone slabs and in runs of the model where the succession continues for one hundred years, Strophomena basilica was eliminated from the community. This resulted in a less diverse climax community and suggests that the community which appears on the tops of most slabs is a more diverse intermediate stage in the succession maintained by the periodic influx of muds.

Walker and Bambach (1972) introduced the concept of time averaging. Their thesis was that "most fossil assemblages . . . do not represent instantaneous community structure as do grab samples of a modern community, but instead reflect community structure as it persisted through time." The importance of time averaging in fossil deposits is

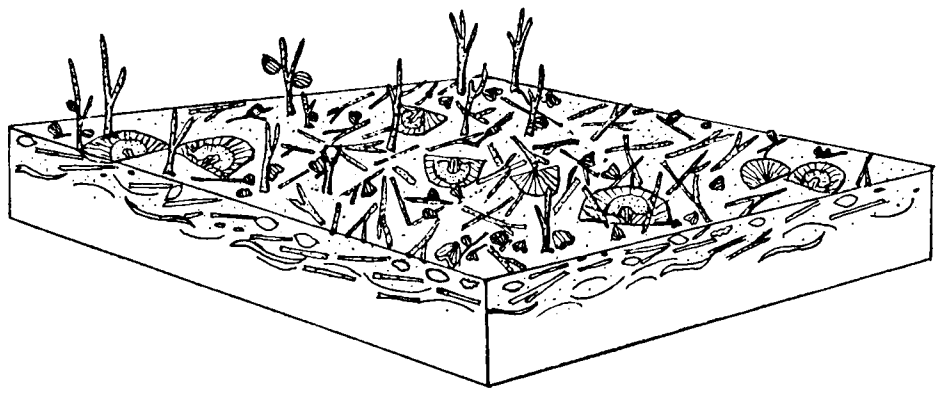

Figure 29. View of the plot in the twenty-fourth year after mud influx.

that the effects of short term fluctuations in the environment are reduced because individuals affected by these events were only part of a larger death assemblage which contained many other generations of the population. Figures 30 and 31 illustrate the difference between survivorships calculated from time averaged populations and living populations killed by a catastrophic event. The survivorship curves for both brachiopod species from the time averaged populations show that few juvenile deaths occurred. In the living populations killed instantaneously by a catastrophic change in the environment both brachiopod species had high juvenile mortality. Thus, a significant effect of time averaging on a fossil assemblage is to reduce the contribution of abnormally high juvenile mortalities, which resulted during a catastrophic kill of the population, in the calculation of survivorship curves for the species. The survivorship curve for Rostricellula rostrata presented in Walker and Parker (1976) was based on measurements of individuals from populations which were composed of the shells of individuals living at the time of mud influx and shells of some individuals which died no more than four years before the muds. Thus, the mortalities they presented were not representative of the population dynamics of this species in the climax sere of the succession and should not be compared with the mortalities of the time-averaged Strophomena populations of these authors.

The model may be used in conjunction with measurements of the thickness of limestone beds at locality two (see figure 2, page 9)

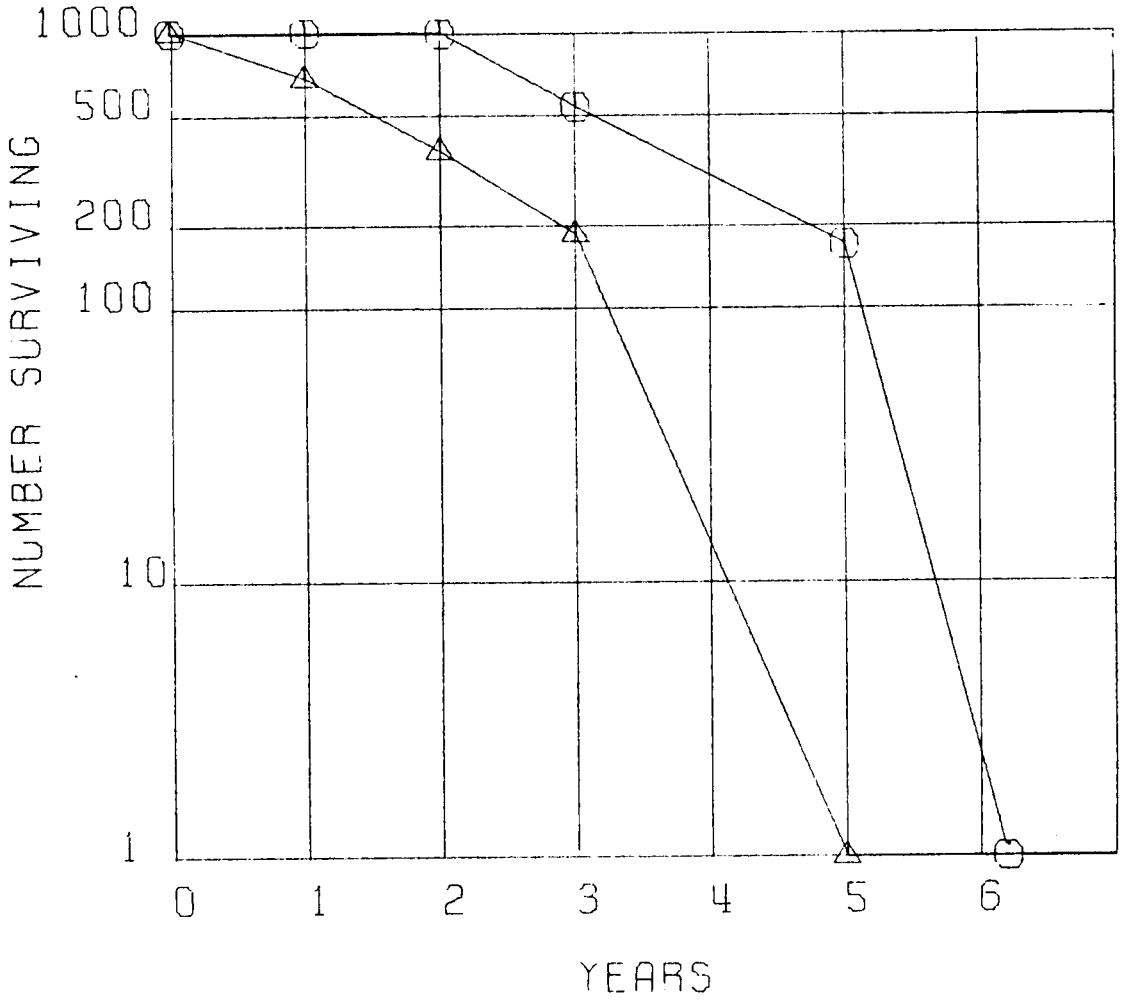

Figure 30. Survivorship curves for the time averaged population of Strophomena (octagons) and the living population of Strophomena based on mean survivorships for each age class during the first forty years of the succession.

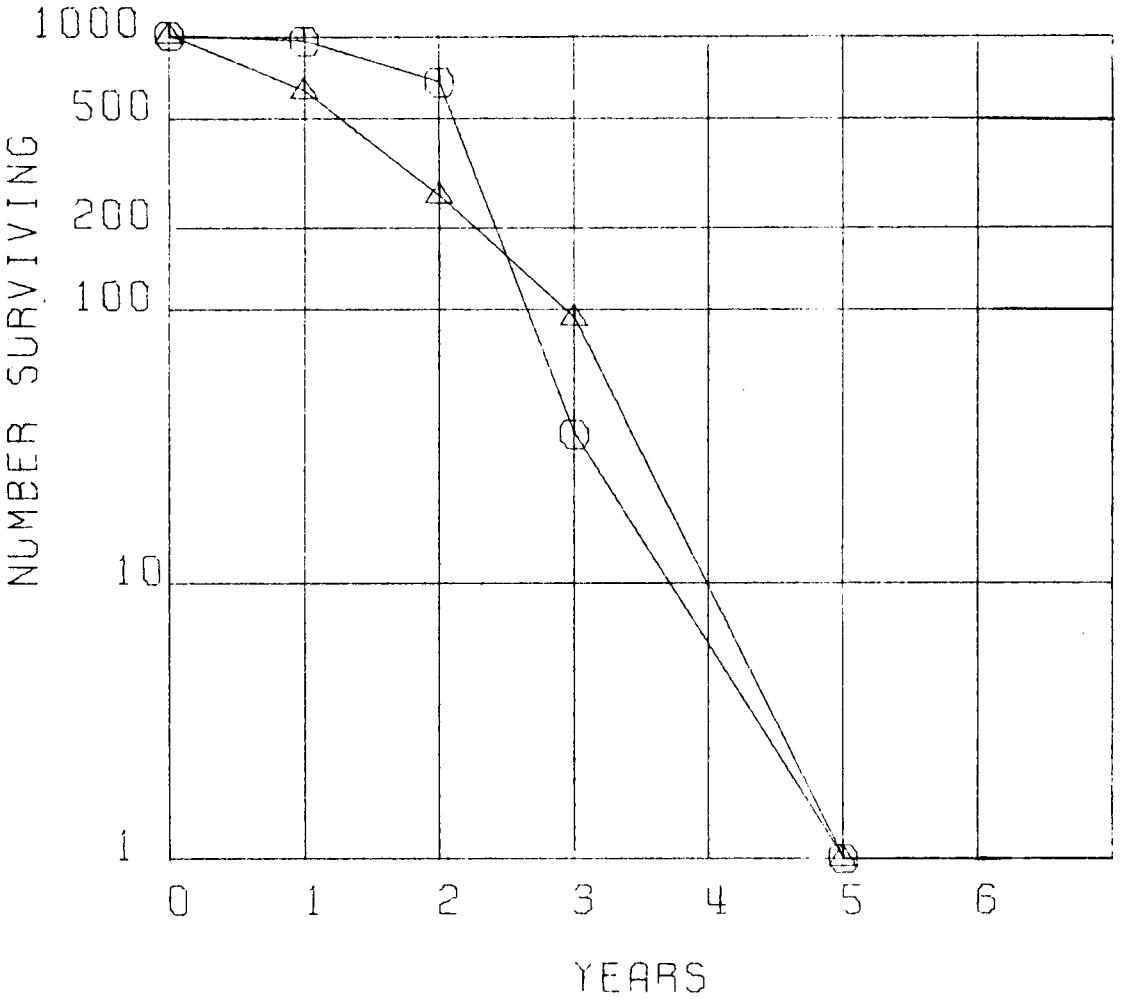

Figure 31. Survivorship curves for the time averaged population of Rostricellula (octagons) and the living population of Rostricellula (triangles) based on the mean survivorship for each age class in the populations during the first forty years of the succession.

to predict the frequency of mud influx in the environment which killed the climax communities. Figure 32 summarizes the time required to deposit a given thickness of limestone in the model. A graph of the time between mud influx in the area was obtained by converting the bed's thickness to the time required to deposit the bed with the aid of figure 32. The time required to deposit a bed was then plotted against the position of the bed in the stratigraphic sequence to produce figure 33 which summarizes the frequency of terrigenous mud influx into the environment. The median length of time between disturbances in this area was sixty-one years.

The depositional rate of the limestone beds in the model was one inch in fifty-eight years. This rate translates to 43 cm/1000 years which is nearly equal to the mean rate for Holocene carbonate sedimentation in the Florida Reef tract according to Milliman (1974) shown in table 19. The shales between the limestones were not considered in the model so 43 cm/1000 years represents a minimum deposition rate for the limestone-shale couplets.

Using the Atlantic coast of Florida as a modern analog of the Tennessee coastline during the Middle Ordovician, one finds a rough correspondence between the frequency of hurricanes in Florida and the period of disturbances in the limestones of locality two. Mitchell has shown that hurricanes strike a one hundred mile stretch of east Florida on the average of every twenty years. While Norton (1949) using weighted averages from a seventy-five year period, predicted hurricanes every thirty to fifty years for the cities of the northeast

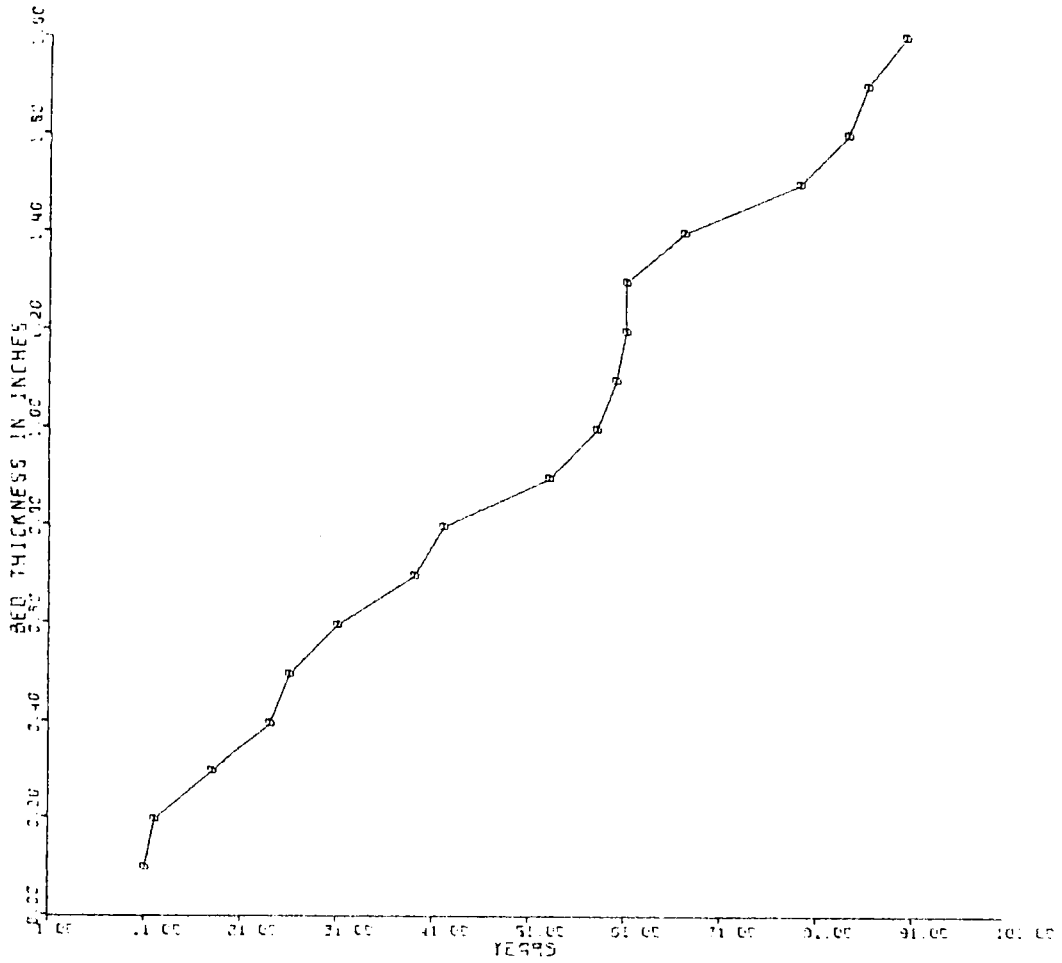

Figure 32. Plot of the time required to deposit a given thickness of limestone in the model.

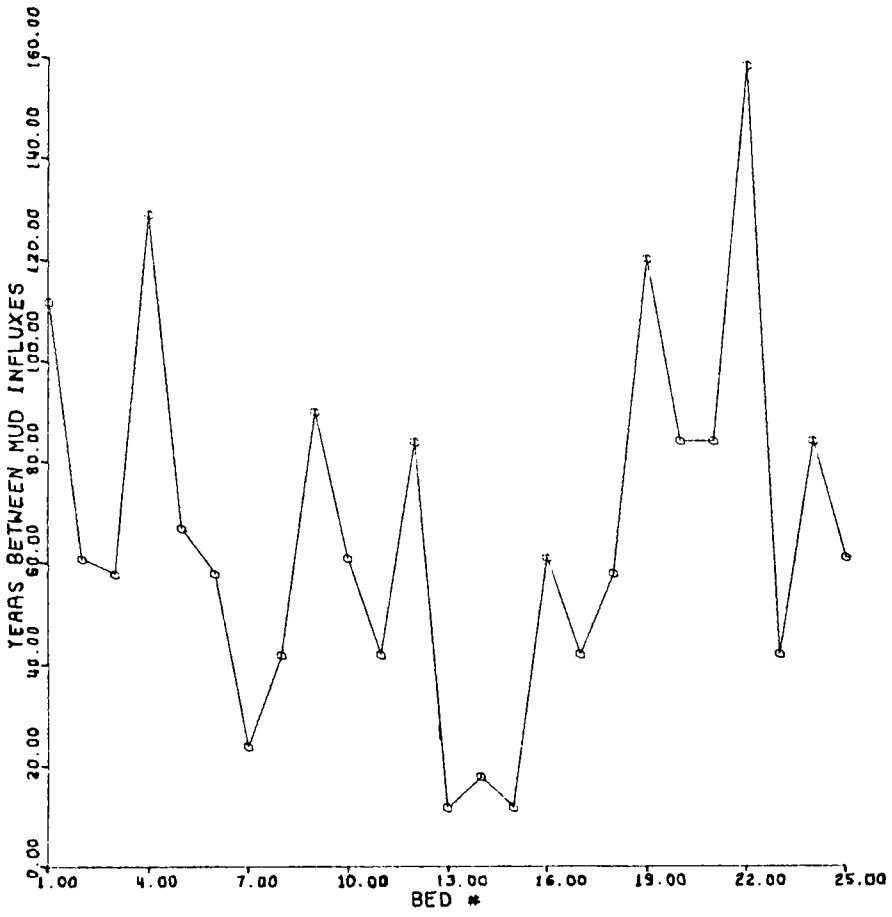

Figure 33. Length of time between mud influxes at the measured section from locality two.

Table 19

Depositional Rates for Holocene Carbonate Sediments
from Milliman (1974)

Location	Mean Rate cm/1000 Years	Mean Rate cm/1000 Years
Florida:		
Biscayne Bay	265	160-370
Florida Bay	30	8-73
White Water Bay	19	11-39
Florida Reef Tract	44	
Bahamas	70	49-91
Bermuda	120	
Jamaica	120	
British Honduras	26	10-34
Western Australia	12	9-15
Hawaii (Oahu)	500	

Florida coast. The correspondence between hurricane frequencies in Florida and the thickness of beds at locality two (see figure 2, page 9) and the storm-deposited beds described in Walker and Parker (1976) suggest that hurricanes may have been responsible for transporting the terrigenous muds into these shelf lagoons.

IX. SUMMARY AND CONCLUSIONS

This thesis presents a discrete spatial simulation model of an Ordovician marine community succession in which mortality was a consequence of competition for space, food and larval settling sites. It is quantified using measurements from individuals in time averaged populations of the two dominant brachiopod species in these communities, Rostricellula rostrata and Strophomena basilica. After adjusting the maximum degree of crowding individuals can survive and the number of larvae which will attempt to settle in the plot each year, the model's output approximates both survivorship curves published for the two brachiopod species and their spatial distribution in the limestone slabs containing the succession.

One use of this model is to test hypotheses about the biology of the two brachiopod species, Rostricellula rostrata and Strophomena basilica. Based on criteria in Levinton (1970) and the role of Strophomena basilica as a pioneer in the succession, Walker and Parker (1976) noted it should be an opportunistic species. They also noted that it lacked the high growth rate and high mortality one would expect in r-selected species. Model results indicate Strophomena basilica produced few larvae each year confirming that it lacked the population dynamics of a true opportunist.

Timing the succession by comparing the model's yearly census and visual displays of levels in the plot with the description of successional stages in Walker and Alberstadt (1976) reveals a community

of organisms which rapidly reached a diverse, near climax stage of its succession. This supports the suggestion by Walker and Alberstadt that this cyclic succession may involve a community structure evolved to recover quickly from periodic devastation.

The average of fifty-two years between disturbances calculated by comparing depositional rates in the model with bed thicknesses measured at locality 2 (figure 2, page 9) matches the frequency of hurricanes on the northeast coast of Florida. This supports the suggestion by Walker and Parker (1976) that major storms were responsible for transporting the terrigenous muds which wiped out the climax communities.

In conclusion, this model has proved a powerful tool for determining the timing of successional stages, exploring the biology of the two brachiopod species and arriving at a depositional rate for the limestones which contain the succession. This model could also be applied to other cyclic successions on muddy substrates, eg. those reported by Lorenz, 1972; Bretsky and Bretsky, 1975; and Kauffman, 1974. Though this model requires detailed study of the life histories of the dominant species in the community and a clear definition of their substratum preferences, it does allow one to explore aspects of community dynamics and rates of limestone deposition which are impossible to determine from a study of the rocks alone.

BIBLIOGRAPHY

BIBLIOGRAPHY

Alexander, R. R., 1975, Growth, morphology and ecology of Paleozoic and Mesozoic opportunistic species of brachiopods from Idaho-Utah: Journal of Paleontology, v. 51, pp. 1133-1149.

Bretsky, P. W. and Bretsky S. S., 1975, Succession and repetition of late Ordovician fossil assemblages from the Nicolet River Valley, Quebec: Paleobiology, v. 1, pp. 225-237.

Craig, G. Y. and Oertel, G., 1966, Deterministic models of living and fossil populations of animals: Quarterly Journal of the Geological Society of London, v. 122, pp. 315-355.

Dayton, P. K., 1971, Competition, distribution and community organization: the provision and subsequent utilization of space in a rocky intertidal community: Ecological Monographs, v. 41, pp. 351-389.

Dunn, G. E. and Miller, B. I., 1964, Atlantic Hurricanes. Louisiana State University Press, Baton Rouge, 377 pp.

Fox, W. T., 1968, Simulation models of time trend curves for paleoecologic analysis: Colloquium on Time Series Analysis, Computer Contribution 18, Kansas Geological Survey, pp. 18-19.

Grigg, R. W. and Maragos, J. E., 1974, Recolonization of hermatypic corals on submerged lava flows in Hawaii: Ecology, v. 55, pp. 387-395.

Harabaugh, J. W., 1966, Mathematical simulation of marine sedimentation with IBM 7090/7094 computers: Kansas Geological Survey Computer Contribution 1, pp. 1-52.

Horn, H. S., 1976, Succession: in Theoretical Ecology: Principles and Applications (May, R. E. ed.), W. B. Saunders, Philadelphia, pp. 187-204.

Johnson, R. G., 1960, Models and methods for the analysis of the mode of formation of fossil assemblages. Geological Society of America Bulletin, v. 71, pp. 1075-1086.

Johnson, R., G., 1972, Conceptual models of benthic marine communities: in Models in Paleobiology (Schopf, T. J. M. ed), Freeman, Cooper and Co., San Francisco, pp. 148-160.

Levinton, J. S., 1970, The paleoecologic significance of opportunistic species: Lethaia, v. 1, pp. 69-78.

Lorenz, D. M., 1972, Ecological reconstruction by stochastic modelling in a late Ordovician level bottom community (abst.): Geological Society of America, Abstracts with Program, v. 4 (3), p. 580.

Maguire, L. A. and Porter, J. W., 1978, A spatial model of growth and competition strategies in coral colonies: (in preparation).

Milliman, J. D., 1974, Marine Carbonates. Springer Verlag, New York, 375 pp.

Mitchell, K. J., 1969, Simulation of the growth of even aged stands of white spruce. Yale University School of Forestry, Bulletin 75, 48 pp.

Mitchell, K. J., 1970, Growth prediction in managed Douglas fir stands: Department of Fisheries and Forestry Internal Report BC-20, Forestry Research Lab Victoria, 35 pp.

Odum, E. P., 1969, The strategy of ecosystem development: Science, v. 164, pp. 262-270.

Payne, R. T., 1963, Ecology of the brachiopod Glottidia pyramidata: Ecological Monographs, v. 33, pp. 187-213.

Rudwick, M. J. S., 1970, Living and fossil brachiopods. Hutchinson University Press, London, 193 pp.

Ryland, J. S., 1970, Bryozoans. Hutchinson University Press, London, 169 pp.

Shugart, H. H., Jr., Crow, T. R., and Hett, J. M., 1972, Forest succession models; a rationale and methodology for modelling forest succession over large regions: Forest Science, v. 19, pp. 203-212.

Smith, A. G., Briden, J. C., and Drewry, 1973, Phanerozoic world maps in Organisms and continents through time (Hughes, N. F., ed.): Special Papers in Paleontology, Paleontological Association, London, v. 12, pp. 1-42.

Southwood, T. R. E., 1976, Binomic strategies and population parameters: in Theoretical Ecology; Principles and Applications (May, R. E., ed.), W. B. Saunders Co., Philadelphia, pp. 26-48.

Tannehill, I. R., 1956, Hurricanes; their nature and history, particularly those of the West Indies and the southern coasts of the United States: Princeton University Press, Princeton, 308 pp.

Thayer, C. W., 1975, Size frequency and population structure of brachiopods: Paleogeography Paleoclimatology Paleoecology, v. 17, pp. 139-148.

Walker, K. R. and Alberstadt, L. A., 1975, Ecological succession as an aspect of structure in fossil communities: Paleobiology, v. 1, pp. 238-257.

Walker, K. R. and Bambach, R. K., 1971, The significance of fossil assemblages from fine-grained sediments; time averaged communities (abst.): Geological Society of America, Abstracts with Program, v. 3(3), pp. 783-784.

Walker, K. R., and Parker, W. C., 1976, Population structure of a pioneer and later stage species in an Ordovician ecological succession: Paleobiology, v. 2, pp. 191-201.

APPENDIX

```
C*************************************************************
C*                                                           *
C*            THIS PROGRAM WAS WRITTEN TO SIMULATE A         *
C*      SUCCESSION OF ORDOVICIAN MARINE COMMUNITIES,         *
C*      DESCRIBED BY WALKER (WALKER AND ALBERSTADT, 1975).   *
C*      THE THREE SPECIES WHICH DOMINATE THIS SUCCESSION,    *
C*      STROPHOMENA BASILICA, ROSTRICELLULA ROSTRATA AND     *
C*      STICTOPORA BLACKENSIS, ARE REPRESENTED IN THE        *
C*      MODEL BY THREE DIMENSIONAL REPLICAS.  THE            *
C*      REPLICAS FOR THE TWO BRACHIOPOD SPECIES WERE         *
C*      CONSTRUCTED TO FIT THE DIMENSIONS OF THE AVERAGE     *
C*      INDIVIDUAL FOR EACH AGE CLASS IN POPULATIONS         *
C*      MEASURED BY WALKER AND PARKER (1976).  THE SHAPE     *
C*      OF THE BRYOZOAN COLONIES WAS CONSTRUCTED TO          *
C*      RESEMBLE THOSE OF FOUND IN THE LIMESTONES WHICH      *
C*      CONTAIN THIS SUCCESSION WITHOUT USING TOO MUCH       *
C*      COMPUTER STORAGE.  THE SPACE BEING SIMULATED IN      *
C*      THE MODEL IS 1)"X1)"X1.4" THIS SPACE IS DIVIDED      *
C*      INTO 100X100X14 RECTANGULAR SOLIDS EACH MEASURING    *
C*      2.54X2.54X1MM. DURING THE SIMULATION A CELL IN       *
C*      THE PLOT MAY BE EMPTY, FILLED WITH A PORTION OF      *
C*      A FEEDING CURRENT, FILLED WITH PART OF A LIVING      *
C*      INDIVIDUAL OR FILLED WITH PART OF A DEAD ORGANISM.   *
C*      THUS, ELEMENTS OF THE ARRAY SUBSTR MAY HAVE          *
C*      DIFFERENT VALUES DEPENDING ON WHAT IS CONTAINED      *
C*      IN THE INDIVIDUAL CELLS THEY REPRESENT.              *
C*                                                           *
C*            AT THE BEGINNING OF EACH YEAR, A SPECIFIED     *
C*      NUMBER OF SPAT FROM EACH SPECIES WILL ATTEMPT TO      *
C*      SETTLE IN THE PLOT. IF THE SUBSTRATUM IN THE CELL,   *
C*      WHERE A LARVA TRIES TO SETTLE, IS SUITABLE FOR       *
C*      LARVAE OF THAT SPECIES, IT WILL SETTLE. OTHERWISE,   *
C*      IT DIES OR IS SWEPT FROM THE PLOT. NEXT, THE LIVING  *
C*      INDIVIDUALS WHICH HAVE ALREADY SETTLED IN THE        *
C*      PLOT GROW TO THE NEXT LARGEST SIZE. SOME GROWING     *
C*      INDIVIDUALS WILL DIE WHEN THEY COME IN CONTACT       *
C*      WITH SURROUNDING SHELLS AND BRYOZOAN COLONIES.       *
C*      FURTHER, EACH YEAR ALL THE INDIVIDUALS WHICH         *
C*      LIVE PAST THE AVERAGE AGE OBSERVED IN THEIR          *
C*      SPECIES WILL ALSO DIE. AFTER ALL THE INDIVIDUALS     *
C*      HAVE EITHER SETTLED, GROWN OR DIED EACH YEAR, A      *
C*      CENSUS IS TAKEN AND THE RESULTS PRINTED AS A         *
C*      TABLE. ANY LEVEL OF THE PLOT MAY ALSO BE DISPLAYED   *
C*      DURING ANY YEAR OF THE SIMULATION.                   *
C*                                                           *
C*                                                           *
C*            *****  VARIABLES *****                        *
C*                                                           *
C*      NAME              FUNCTION                           *
C*                                                           *
C*      A                 ITS ELEMENTS INDICATE WHICH        *
```

```
C*                          LEVELS OF CELLS ARE TO BE PRINTED  *
C*                          DURING A YEAR                      *
C*                                                             *
C*      CONTAC              CONTAINS THE NUMBER OF CONTACTS    *
C*                          EACH INDIVIDUAL IS ALLOWED BEFORE  *
C*                          DEATH OCCURS                       *
C*                                                             *
C*      DIR,ORI             DEFINES THE DIRECTION THE SHELL    *
C*                          IS FACING                          *
C*                                                             *
C*      HIGHSV              CONTAINS THE POINTERS TO THE       *
C*                          ELEMENTS IN ARRAYS ISTO,JSTO,      *
C*                          KSTO, OSTO AND OSTO WHICH DEFINE   *
C*                          THE COORDINATES AND ORIENTATION    *
C*                          OF THE LAST MEMBER OF A COHORT     *
C*                                                             *
C*      ICOORD              ARE THE COORDINATES OF A CELL IN   *
C*      JCOORD              THE SPACE BEING SIMULATED          *
C*      KCOORD                                                 *
C*                                                             *
C*      IX,IY               ARGUMENTS FOR THE RANDOM NUMBER    *
C*                          GENERATOR RANDU                    *
C*                                                             *
C*      LIFDST              CONTAINS THE AGE OF EACH COHORT    *
C*                          WITH LIVING MEMBERS                *
C*                                                             *
C*      LOWSV               CONTAINS THE POINTERS TO THE       *
C*                          ELEMENTS IN ARRAYS ISTO, JSTO,     *
C*                          KSTO, OSTO, AND OSTO WHICH DEFINE  *
C*                          THE COORDINATES AND ORIENTATION    *
C*                          OF THE FIRST MEMBER OF A COHORT    *
C*                                                             *
C*      SPAT                CONTAINS THE NUMBER OF SPAT THAT   *
C*                          WILL TRY TO SETTLE IN THE PLOT     *
C*                          EACH YEAR                          *
C*                                                             *
C*      SPECSV              CONTAINS THE SPECIES EACH COHORT   *
C*                          BELONGS TO                         *
C*      TIME                IS THE NUMBER OF YEARS THE MODEL   *
C*                          WILL RUN                           *
C*                                                             *
C*      BEGIN               IS THE NUMBER OF RANDOM NUMBERS    *
C*                          THAT THE PROGRAM WILL GENERATE     *
C*                          BEFORE USING THE NEXT ONES AS      *
C*                          SETTLING COORDINATES FOR THE SPAT  *
C*                                                             *
C*      COUNT               IS A COUNTER USED IN STORING THE   *
C*                          COORDINATES AT WHICH A LARVA WILL  *
C*                          ATTEMPT TO SETTLE                  *
C*                                                             *
C*      IHOLD,JHOLD         STORE THE I,J COORDINATES AT WHICH *
```

```
C*                          THE LARVAE ATTEMPT TO SETTLE          *
C*                                                                *
C*      LIFDUR              IS THE AGE OF THE COHORT WHOSE        *
C*                          MEMBERS ARE CURRENTLY GROWING         *
C*                                                                *
C*      MAXLIF              CONTAINS THE AGE BEYOND WHICH NO      *
C*                          MEMBER OF THE SPECIES SURVIVES        *
C*                                                                *
C*      IYEAR               IS THE CURRENT YEAR IN THE MODEL      *
C*                                                                *
C*      SPECIF              IS THE SPECIES WHICH THE MEMBERS      *
C*                          OF THE SETTLING OR GROWING COHORT     *
C*                          BELONG                                *
C*                                                                *
C*      LOW                 CONTAINS THE NUMBER OF THE FIRST      *
C*                          MEMBER OF THE COHORT WHICH IS         *
C*                          CURRENTLY GROWING                     *
C*                                                                *
C*      HIGH                CONTAINS THE NUMBER OF THE LAST       *
C*                          MEMBER OF THE COHORT WHICH IS         *
C*                          CURRENTLY GROWING                     *
C*                                                                *
C*      TIMEPS              A SWITCH WHICH INDICATES WHETHER      *
C*                          SHELLS ARE GROWING AT THE FIRST       *
C*                          OF THE YEAR OR WHETHER THE PROGRAM    *
C*                          IS REGROWING ALL SHELLS SO THAT       *
C*                          THOSE INDIVIDUALS WHICH WERE          *
C*                          LIFTED BY GROWING SHELLS ARE          *
C*                          RECREATED IN THEIR NEW LOCATIONS      *
C*                                                                *
C*                                                                *
C*                  *****  CARD 1 *****                           *
C*                                                                *
C*      COLUMNS   FORMAT   NAME    FUNCTION                       *
C*                                                                *
C*        1-2       I2     BEGIN   THE POINT IN A SERIES OF       *
C*                                 RANDOM NUMBERS WHERE I,J       *
C*                                 COORDINATE SELECTION WILL      *
C*                                 BEGIN                          *
C*                                                                *
C*        3-4       I2     TIME    TIME IN YEARS THAT THE         *
C*                                 SIMULATION WILL RUN            *
C*                                                                *
C*                                                                *
C*        5-9       I5     IX      SEED FOR THE RANDOM            *
C*                                 NUMBER GENERATOR RANDU         *
C*                                                                *
C*                  *****  CARD 2 *****                           *
C*                                                                *
C*        1         BLANK                                         *
C*                                                                *
```

```
C*          2-3       I2     CONTAC MAXIMUM NUMBER OF CONTACTS *
C*                             FOR 1 YEAR OLD STROPHOMENA *
C*                                                        *
C*          4-5       I2     CONTAC MAXIMUM NUMBER OF CONTACTS *
C*                             FOR 2 YEAR OLD STROPHOMENA *
C*                                                        *
C*          6-7       I2     CONTAC MAXIMUM NUMBER OF CONTACTS *
C*                             FOR 3 YEAR OLD STROPHOMENA *
C*                                                        *
C*          8-9       I2     CONTAC MAXIMUM NUMBER OF CONTACTS *
C*                             FOR 4 YEAR OLD STROPHOMENA *
C*                                                        *
C*          10-11     I2     CONTAC MAXIMUM NUMBER OF CONTACTS *
C*                             FOR 5 YEAR OLD STROPHOMENA *
C*                                                        *
C*          12-13     I2     CONTAC MAXIMUM NUMBER OF CONTACTS *
C*                           FOR 1 YEAR OLD ROSTRICELLULA*
C*                                                        *
C*          14-15     I2     CONTAC MAXIMUM NUMBER OF CONTACTS *
C*                           FOR 2 YEAR OLD ROSTRICELLULA*
C*                                                        *
C*          16-17     I2     CONTAC MAXIMUM NUMBER OF CONTACTS *
C*                           FOR 3 YEAR OLD ROSTRICELLULA*
C*                                                        *
C*          18-19     I2     CONTAC MAXIMUM NUMBER OF CONTACTS *
C*                           FOR 4 YEAR OLD ROSTRICELLULA*
C*                                                        *
C*          20-80     BLANK                               *
C*                                                        *
C*                   *****  CARD 3 *****                  *
C*                                                        *
C*          1         BLANK                               *
C*                                                        *
C*          2-4       I3     SPAT   = OF STROPHOMENA SPAT *
C*                             WHICH WILL TRY TO SETTLE   *
C*                             IN THE PLOT EACH YEAR      *
C*                                                        *
C*          5         BLANK                               *
C*                                                        *
C*          6-8       I3     SPAT   = OF ROSTRICELLULA SPAT *
C*                             WHICH WILL TRY TO SETTLE   *
C*                             IN THE PLOT EACH YEAR      *
C*                                                        *
C*          9         BLANK                               *
C*                                                        *
C*          10-12     I3     SPAT   = OF STICTOPORA SPAT  *
C*                             WHICH WILL TRY TO SETTLE   *
C*                             IN THE PLOT EACH YEAR      *
C*                                                        *
C*          13-80     BLANK                               *
C*                                                        *
```

```
C*                                                                      *
C*                ***** CARD 4 *****                                    *
C*                                                                      *
C*        1        I1      A       A 1 WILL CAUSE LEVEL 1 TO           *
C*                                  BE DISPLAYED ON THE LINE            *
C*                                  PRINTER                             *
C*                                                                      *
C*        2        I1      A       A 1 WILL CAUSE LEVEL 2 TO           *
C*                                  BE DISPLAYED ON THE LINE            *
C*                                  PRINTER                             *
C*                                                                      *
C*        3        I1      A       SAME AS ABOVE BUT FOR LEVEL         *
C*                                  3 OF YEAR 1                         *
C*                                                                      *
C*        4        I1      A       SAME AS ABOVE BUT FOR LEVEL         *
C*                                  4 OF YEAR 1                         *
C*                                                                      *
C*        5        I1      A       SAME AS ABOVE BUT FOR LEVEL         *
C*                                  5 OF YEAR 1                         *
C*                                                                      *
C*        6        I1      A       SAME AS ABOVE BUT FOR LEVEL         *
C*                                  6 OF YEAR 1                         *
C*                                                                      *
C*        7        I1      A       SAME AS ABOVE BUT FOR LEVEL         *
C*                                  7 OF YEAR 1                         *
C*                                                                      *
C*        8        I1      A       SAME AS ABOVE BUT FOR LEVEL         *
C*                                  8 OF YEAR 1                         *
C*                                                                      *
C*        9        I1      A       SAME AS ABOVE BUT FOR LEVEL         *
C*                                  9 OF YEAR 1                         *
C*                                                                      *
C*        10       I1      A       SAME AS ABOVE BUT FOR LEVEL         *
C*                                  10 OF YEAR 1                        *
C*                                                                      *
C*        11       I1      A       SAME AS ABOVE BUT FOR LEVEL         *
C*                                  11 OF YEAR 1                        *
C*                                                                      *
C*        12       I1      A       SAME AS ABOVE BUT FOR LEVEL         *
C*                                  12 OF YEAR 1                        *
C*                                                                      *
C*        13       I1      A       SAME AS ABOVE BUT FOR LEVEL         *
C*                                  13 OF YEAR 1                        *
C*                                                                      *
C*        14       I1      A       SAME AS ABOVE BUT FOR LEVEL         *
C*                                  14 OF YEAR 1                        *
C*                                                                      *
C*        15       I1      A       SAME AS ABOVE BUT FOR LEVEL         *
C*                                  15 OF YEAR 1                        *
C*                                                                      *
C*        16       I1      A       SAME AS ABOVE BUT FOR LEVEL         *
```

```
C*                                  16 OF YEAR 1                  *
C*                                                                *
C*        17        BLANK                                         *
C*                                                                *
C*        18-34                     SAME AS 1-17 BUT FOR YEAR 2*
C*                                                                *
C*        35-51                     SAME AS 1-17 BUT FOR YEAR 3*
C*                                                                *
C*        52-69                     SAME AS 1-17 BUT FOR YEAR 4*
C*                                                                *
C*                 *****  CARD 5 *****                            *
C*                                                                *
C*      SAME AS CARD 4 BUT FOR YEARS 5-8                          *
C*                                                                *
C*                 *****  CARD 6 *****                            *
C*                                                                *
C*      SAME AS CARD 5 BUT FOR YEARS 9-12                         *
C*                                                                *
C*      CARDS 7-22 ARE CODED THE SAME AS THE PREVIOUS             *
C*      3 CARDS TO DISPLAY THE LEVELS FOR THE REMAINDER           *
C*      OF THE 100 YEARS THE MODEL WILL RUN                       *
C*                                                                *
C*****************************************************************
      IMPLICIT INTEGER*2 (A-X)
      INTEGER*4 IY,IX
      INTEGER*2 CONTAC(3,6)/18*0/,TIMEPS/0/,MAXLIF(3)/5,4,1/
      INTEGER*2 SPAT(3),A(16,100)/1600*0/,LIFDUR/1/
      COMMON/BLOCK1/ ICOORD,JCOORD,KCOORD,DIR
      COMMON/BLOCK2/HIGHSV(20),LOWSV(20),LIFDST(20)
     1,SPECSV(20)
      COMMON/BLCK 10/ IHOLD(600),JHOLD(600)
      COMMON/SWIT/IYEAR
C*****************************************************************
C*                                                                *
C*      READING MODEL PARAMETERS                                  *
C*                                                                *
C*****************************************************************
5000  CONTINUE
      READ (5,1000) BEGIN,TIME,IX
 1000 FORMAT (I2,I3,I5)
      READ (5,1010) ((CONTAC(I,J),J=1,5),I=1,3)
 1010 FORMAT (1X,15I2)
      WRITE (6,1020)TIME
 1020 FORMAT (1H1,10X, 'THE SIMULATION WILL RUN ',I3,
     1' YEARS')
      WRITE (6,1030) BEGIN,IX
 1030 FORMAT (1H0, T10,'THE NUMBER USED TO GENERATE THE'
     1,' FIRST I COORDINATE IS =',I2,
     2' IN THE SERIES GENERATED BY RANDU WITH
     3 A SEED OF ',I5)
      WRITE (6,1040)
```

```
1040 FORMAT (1H0,T10,'NUMBER OF CONTACTS BEFORE DEATH'/)
     DO 2 I=1,3
     DO 2 J=1,5
     IF (J .GT. MAXLIF(I)) GO TO 2
     WRITE (6,1050) I,J,CONTAC(I,J)
1050 FORMAT (1H ,T10,'SPECIES ',I1,10X,'AGECLASS ',I1
    1,10X,'CONTACTS ',I2)
   2 CONTINUE
     READ (5,1060) (SPAT(SPECIE),SPECIE=1,3)
1060 FORMAT (3(1X,I3))
     DO 3 I=1,3
     WRITE (6,1070) SPAT(I),I
1070 FORMAT (1H0,T10,I3,' SPAT OF SPECIES ',I1,
    1'WILL SETTLE IN THIS AREA EACH YEAR')
   3 CONTINUE
     READ (5,1080) ((A(I,J),I=1,16),J=1,100)
1080 FORMAT (4(16I1,1X))
     DO 4 N=1,BEGIN
     CALL RANDU(IX,IY,YFL)
     IX=IY
   4 CONTINUE
C*****************************************************************
C*                                                               *
C*      THESE 3 DO LOOPS CYCLE INDIVIDUALS OF EACH SPECIES       *
C*      THROUGH THEM MAIN PROGRAM DURING EACH YEAR               *
C*                                                               *
C*****************************************************************
   5 DO 15 IYEAR=1,TIME
     DO 10 SPECIE=1,3
     COUNT=0
     NSPECI=SPAT(SPECIE)
     DO 9 INDIV=1,NSPECI
C*****************************************************************
C*                                                               *
C*      IF EITHER THE I OR J COORDINATE FALLS OUTSIDE THE        *
C*      LIMITS OF THE PLOT, ANOTHER I OR J IS GENERATED          *
C*      TO REPLACE IT                                            *
C*                                                               *
C*****************************************************************
   6 CALL RANDU (IX,IY,YFL)
     IX=IY
     IF (YFL .LT. .010)GO TO 6
     ICOORD=YFL*100
   7 CALL RANDU (IX,IY,YFL)
     IX=IY
     IF (YFL .LT. .010) GO TO 7
     JCOORD=YFL*100
C*****************************************************************
C*                                                               *
C*      STORING THE COORDINATES WHERE EACH LARVA WILL            *
C*      ATTEMPT TO SETTLE                                        *
```

```
C*                                                                    *
C**********************************************************************
    8 COUNT=COUNT+1
      IHOLD(COUNT)=ICOORD
      JHOLD(COUNT)=JCOORD
    9 CONTINUE
C**********************************************************************
C*                                                                    *
C*       CALLING SETTLE TO HANDLE THE SETTLING OF LARVAE              *
C*       DURING EACH SPATFALL                                         *
C*                                                                    *
C**********************************************************************
      CALL SETTLE (SPECIE,IYEAR,COUNT,IX)
   10 CONTINUE
   11 DO 12 N=1,20
C**********************************************************************
C*                                                                    *
C*       DETERMINING THE AGE OF THE COHORT BEING PROCESSED            *
C*                                                                    *
C**********************************************************************
      LIFDUR=IYEAR-LIFDST(N)
      IF (LIFDST(N) .EQ. 0 .OR. LIFDUR .LT. 1) GO TO 12
C**********************************************************************
C*                                                                    *
C*      SETTING UP POINTERS TO LOCATIONS WHERE INFORMATION            *
C*      ABOUT THE COHORT IS STORED                                    *
C*                                                                    *
C**********************************************************************
      HIGH=HIGHSV(N)
      LOW=LOWSV(N)
      SPECIE=SPECSV(N)
C**********************************************************************
C*                                                                    *
C*       SETTING THE MAXIUM NUMBER OF CONTACTS AN                     *
C*       INDIVIDUAL MAY EXPERIENCE IN  A YEAR WITHOUT                 *
C*       DYING                                                        *
C*                                                                    *
C**********************************************************************
      CONTC=CONTAC(SPECIE,LIFDUR)
C**********************************************************************
C*                                                                    *
C*       CALLING BIOTA TO GROW THE SHELLS IN THE COHORT               *
C*                                                                    *
C**********************************************************************
      CALL BIOTA (SPECIE,LOW,HIGH,LIFDUR,CONTC,TIMEPS,IYEAR
     1,N)
   12 CONTINUE
      IF (IYEAR .LT. 4 .OR. TIMEPS .EQ. 2) GO TO 13
      TIMEPS=2
C**********************************************************************
C*                                                                    *
```

```
C*       MAKING A SECOND PASS OVER THE SHELLS TO GROW          *
C*       THOSE INDIVIDUALS WHICH WERE LIFTED UP BY             *
C*       GROWING SHELLS ON WHICH THEY HAD SETTLED              *
C*                                                             *
C*************************************************************
      GO TO 11
C*************************************************************
C*                                                             *
C*       CALLING CENSUS TO DISPLAY THE NUMBER OF LIVING        *
C*       AND DEAD INDIVIDUALS                                  *
C*                                                             *
C*************************************************************
   13 CALL CENSUS(IYEAR)
      IF (IYEAR .GT. 1) CALL SURFAC
      IYEAR7=IYEAR
      IF (IYEAR7 .GT. 16) IYEAR7=16
      DO 14 K=1,IYEAR7
C*************************************************************
C*                                                             *
C*       IF THE VALUE OF A(K) IS 1 THE CONTENTS OF LEVEL       *
C*       K AND A CENSUS OF THAT LEVEL WILL BE PRINTED          *
C*                                                             *
C*************************************************************
      IF (A(K,IYEAR) .NE. 1) GO TO 14
      WRITE (6,1090) IYEAR
 1090 FORMAT (1H1,T54,'VISUAL DISPLAY OF SUBSTR FOR YEAR '
     1,I2)
      WRITE (6,1100)K
 1100 FORMAT (1H0,20X,'LEVEL ',I2)
      CALL MAP(K)
   14 CONTINUE
      TIMES=0
   15 CONTINUE
      STOP
      END
      SUBROUTINE SETTLE (SPECIE,IYEAR,COUNT,IX)
C*************************************************************
C*       THE SUBROUTINE SETTLE DETERMINES WHICH                *
C*       INDIVIDUALS IN A COHORT OF LARVAE WILL SETTLE         *
C*       IN THE PLOT EACH YEAR, BASED ON THE SUBSTRATE         *
C*       PREFENCES OF A LARVA AND THE NATURE OF THE            *
C*       SUBSTRATUM.                                           *
C*                                                             *
C*             **** SUBSTRATUM TYPE ****                       *
C*                                                             *
C*       VALUE OF AN ELEMENT          MEANING                  *
C*       IN ARRAY SUBSTR                                       *
C*                                                             *
C*             0                      EMPTY CELL               *
C*             1                      LIVE STROPHOMENA         *
C*             2                      LIVE POSTRICELLULA       *
```

```
C*              3                       LIVE STICTOPORA          *
C*              4                       FEEDING CURRENT          *
C*              5                       DEAD STROPHOMENA         *
C*              6                       DEAD ROSTRICELLULA       *
C*              7                       DEAD STICTOPORA          *
C*              8                       1/2 CELL OF LIVE STROP.  *
C*              9                       1/2 CELL OF LIVE ROST.   *
C*             10                       1/2 CELL OF DEAD STROP.  *
C*             11                       1/2 CELL OF DEAD ROST.   *
C*             12                       SOUPY MUD                *
C*            >12                       ID = FOR AN INDIVIDUAL   *
C*                                                               *
C*                                                               *
C*       **** SUBSTRATUM PREFERENCES ****                        *
C*            (WILL THE LARVA SETTLE)                            *
C*                                                               *
C*                                                               *
C*    GENUS                    SUBSTRATUM TYPE                  *
C*                                                               *
C*                        0   1   2   3   4   5   6   7         *
C*                                                               *
C*    STROPHOMENA        NO YES  NO  NO  NO YES YES  NO         *
C*    ROSTRICELLULA      NO  NO  NO  NO  NO  NO YES YES         *
C*    STICTOPORA         NO YES  NO  NO  NO YES YES YES         *
C*                                                               *
C*    GENUS                    SUBSTRATUM TYPE                  *
C*                        8   9  10  11  12 >12                  *
C*    STROPHOMENA       YES  NO YES  NO YES  NO                 *
C*    ROSTRICELLULA      NO  NO  NO YES  NO  NO                 *
C*    STICTOPORA        YES  NO YES  NO  NO  NO                 *
C*                                                               *
C*                                                               *
C*           **** VARIABLES ****                                 *
C*                                                               *
C*    NAME              FUNCTION                                 *
C*                                                               *
C*    IHOLD,JHOLD       STORE THE LOCATION AT WHICH              *
C*                      THE LARVA WILL ATTEMPT TO SETTLE         *
C*                                                               *
C*    ISTO,JSTO,        STORE THE LOCATION AND ORIENTATION       *
C*    KSTO,OSTO,        OF LARVAE WHICH HAVE SUCCESSFULLY        *
C*    OSTO              SETTLED IN THE PLOT                      *
C*                                                               *
C*    LOWSV             STORES THE POINTER TO THE ELEMENT        *
C*                      IN ARRAYS ISTO, JSTO, KSTO, OSTO         *
C*                      AND OSTO WHICH CONTAINS INFORMATION      *
C*                      ON THE LOCATION AND ORIENTATION OF       *
C*                      THE FIRST LARVA IN THE COHORT WHICH      *
C*                      SUCCESSFULLY SETTLED IN THE AREA         *
C*                                                               *
C*    HIGHSV            PERFORMS THE SAME FUNCTION FOR THE       *
```

```
C*                          LAST LARVA IN THE COHORT AS LOWSV   *
C*                          DID FOR THE FIRST                   *
C*                                                              *
C*       LIVLVL             A COUNTER WHICH RECORDS THE NUMBER  *
C*                          OF SPAT WHICH SUCCESSFULLY SETTLE   *
C*                          IN EACH LEVEL OF THE PLOT IN EACH   *
C*                          'YEAR'                              *
C*                                                              *
C*                                                              *
C**************************************************************
      IMPLICIT INTEGER*2 (A-X)
      COMMON/BLOCK2/HIGHSV(20),LOWSV(20),LIFCST(20)
     1,SPECSV(20)
      COMMON/BLOCK 3/ SUBSTR(100,100,16)
      COMMON/BLOCK 4/DEAD(3)
      COMMON/BLCK 10/ IHOLD(600),JHOLD(600)
      COMMON/BLCK 15/ ISTO(2050),JSTO(2050),KSTO(2050)
     1,DSTO(2050),LIVLVL(16,3)
      INTEGER*4 IY,IX
5000  CONTINUE
      LIMIT=IYEAR
    2 IF (IYEAR .GT. 16) LIMIT=16
      CONVRT=LIMIT+1
C**************************************************************
C*                                                            *
C*       FINDING THE FIRST EMPTY ELEMENT IN THE ARRAYS        *
C*       WHICH RECORD INFORMATION ABOUT EACH COHORT           *
C*                                                            *
C**************************************************************
      DO 3 CHECK=1,20
      I=CHECK
      IF (LIFCST(CHECK) .EQ. 0) GO TO 4
    3 CONTINUE
      RETURN
    4 NCOUNT=LOWSV(I)-1
      DO 21 N=1,CCUNT
      ICOORD=IHOLD(N)
      JCOORD=JHOLD(N)
      IHOLD(N)=0
      JHOLD(N)=0
      GO TO 713
C**************************************************************
C*                                                            *
C*       GENERATING NEW COORDINATES FOR LARVAE WHICH SETTLE   *
C*       ABOVE THE SPACE BEING MODELLED                       *
C*                                                            *
C**************************************************************
  712 CALL RANDU(IX,IY,YFL)
      IX=IY
      IF (YFL .LT. .01) GO TO 712
      ICOORD=YFL*100
```

```
  714 CALL RANDU(IX,IY,YFL)
      IX=IY
      IF (YFL .LT. .01) GO TO 714
      JCOORD=YFL*100
C*************************************************************
C*                                                           *
C*       FINDING THE FIRST EMPTY LEVEL IN THE PLOT AT        *
C*       THE I,J COORDINATE WHERE A LARVA IS TRYING          *
C*       TO SETTLE                                           *
C*                                                           *
C*************************************************************
  713 DO 5 DROPER=1,LIMIT
      KCOOR=CONVRT-DROPER
      IF (SUBSTR (ICOORD,JCOORD,KCOOR) .GT. 0) GO TO 6
    5 CONTINUE
      KCOORD=1
      GO TO 7
    6 KCOORD=KCOOR+1
      IF (KCOORD .GT. 14) GO TO 712
    7 MARK=SUBSTR(ICOORD,JCOORD,KCOOR)+1
C*************************************************************
C*                                                           *
C*       TESTING THE SUBSTRATUM TO SEE IF IT IS A TYPE       *
C*       ON WHICH THE LARVA CAN SETTLE                       *
C*                                                           *
C*************************************************************
      GO TO (8,9,10),SPECIE
    8 GO TO (21,12,21,21,21,12,21,21,11,21,11,21,12),MARK
      GO TO 21
    9 GO TO (21,21,21,21,21,21,12,12,21,21,21,11),MARK
      GO TO 21
   10 GO TO (21,12,21,21,21,12,12,12,11,21,11,21),MARK
      GO TO 21
C*************************************************************
C*                                                           *
C*       THE SUBSTRATUM WAS SUITABLE SELECT AN ORIENTATION   *
C*       FOR THE LARVA                                       *
C*                                                           *
C*************************************************************
   11 CALL RANDU (IX,IY,YFL)
      IX=IY
      IF (YFL .LT. .5) GO TO 21
   12 CALL RANDU (IX,IY,YFL)
      IX=IY
      IF (YFL-.125 .GT. 0) GO TO 13
      DIP=1
      GO TO 20
   13 IF (YFL-.25 .GT. 0) GO TO 14
      DIP=2
      GO TO 20
   14 IF (YFL-.375 .GT. 0) GO TO 15
```

```
      DIR=3
      GO TO 20
   15 IF (YFL-.50 .GT. 0) GO TO 16
      DIR=4
      GO TO 20
   16 IF (YFL-.625 .GT. 0) GO TO 17
      DIR=5
      GO TO 20
   17 IF (YFL-.75 .GT. 0) GO TO 18
      DIR=6
      GO TO 20
   18 IF (YFL-.875 .GT. 0) GO TO 19
      DIR=7
      GO TO 20
   19 DIR=8
C*************************************************************
C*                                                           *
C*      STORE THE LARVA'S COORDINATES IN THE PLOT            *
C*                                                           *
C*************************************************************
   20 NCOUNT=NCOUNT+1
      ISTO(NCOUNT)=ICOORD
      JSTO(NCOUNT)=JCOORD
      KSTO(NCOUNT)=KCOORD
      DSTO(NCOUNT)=DIR
      LIVLVL(KCOORD,SPECIE)=LIVLVL(KCOORD,SPECIE)+1
      SUBSTR(ICOORD,JCOORD,KCOORD)=NCOUNT
   21 CONTINUE
C*************************************************************
C*                                                           *
C*      THE WHOLE COHORT HAS BEEN PROCESSED. STORE           *
C*      INFORMATION ON ITS LOWER AND UPPER BOUNDS,           *
C*      ITS SPECIES AND THE YEAR ITS LARVAE SETTLED          *
C*      IN THE PLOT                                          *
C*                                                           *
C*************************************************************
      SPECSV(I)=SPECIE
      LIFEST(I)=IYEAR
      HIGHSV(I)=NCOUNT
      LOW=LOWSV(I)
      HIGH=HIGHSV(I)
      IF (LOW .GT. HIGH)LIFCST(I)=0
      IF (SPECIE .NE. 3) RETURN
C*************************************************************
C*                                                           *
C*      IF THE SPECIES IS STICTOPORA BLACKENSIS RUN           *
C*      THROUGH ITS WHOLE LIFE CYCLE                         *
C*                                                           *
C*************************************************************
      LIFEST(I)=0
      IF (LOW .GT. HIGH) RETURN
```

```
      CALL GROW(HIGH,LOW,IX)
      RETURN
      END
      SUBROUTINE MORTAL (SPECIE,LIFDUR,*,HIGH,LOW,TIMEPS)
C*************************************************************
C*                                                           *
C*      THE SUBROUTINE MORTAL HANDLES THE DEATH OF           *
C*      INDIVIDUALS IN THE MODEL.  WHEN AN INDIVIDUAL        *
C*      DIES:  1)  THE ELEMENT OF THE ARRAY STORING ITS      *
C*                 K COORDINATE IS SET TO ZERO TO MARK       *
C*                 IT AS DEAD.                               *
C*             2)  THE MODEL OF THE INDIVIDUAL IN THE        *
C*                 PLOT IS REPLACED BY THE MODEL OF A        *
C*                 DEAD INDIVIDUAL OF THE SAME AGE           *
C*                                                           *
C*               ****  VARIABLES ****                        *
C*                                                           *
C*      BIOSTO           STORES THE MODELS OF THE LIVING     *
C*                       AND DEAD BRACHIOPODS, STROPHOMENA   *
C*                       BASILICA AND ROSTRICELLULA ROSTRATA*
C*                                                           *
C*      AGECLS           CONTAINS THE TOTAL NUMBER OF DEAD   *
C*                       INDIVIDUALS FROM EACH AGE CLASS     *
C*                                                           *
C*      CTR2             IS A POINTER TO THE ELEMENTS OF     *
C*                       BIOSTO WHICH WILL REPLACE THE       *
C*                       CONTENTS OF THE CELLS IN THE PLOT   *
C*                       AS THE LIVING BRACHIOPOD GROWS      *
C*                                                           *
C*      DIRCTR           ARRAY CONTAINING POINTERS TO THE    *
C*                       BEGINNINGS OF MODELS CONTAINED IN   *
C*                       BIOSTO                              *
C*                                                           *
C*      LOLIMI,LOLIMJ,   STORE THE BOUNDS OF THE AREA        *
C*      LOLIMK,HILIMI,   OCCUPIED BY THE INDIVIDUAL          *
C*      HILIMJ,HILIMK    BRACHIOPOD ONE YEAR BEFORE ITS      *
C*                       DEATH                               *
C*                                                           *
C*      ICOORD,JCOORD    ARE THE COORDINATES OF AN           *
C*      KCOORD           INDIVIDUAL                          *
C*                                                           *
C*      DIR,ORI          TOGATHER, DEFINE THE DIRECTION      *
C*                       AN INDIVIDUAL IS FACING             *
C*                                                           *
C*      LOWERI,UPPERI    DEFINE THE BOUNDARIES OF THE AREA   *
C*      ISTO,JSTO,       STORE THE COORDINATES AND           *
C*      KSTO,DSTO,       ORIENTATION INFORMATION FOR         *
C*                       EACH LIVING INDIVIDUAL              *
C*                                                           *
C*      LIFE             INDICATES STATUS OF AN ORGANISM:    *
C*                       1 MEANS THE ORGANISM IS ALIVE       *
```

```
C*                          2 MEANS THE ORGANISM IS DEAD          *
C*                                                                *
C*       LIFMAX             STORES THE MAXIMUM AGE INDIVIDUALS    *
C*                                                                *
C*                          OF A SPECIES REACH                    *
C*                                                                *
C*       LOWERJ,UPPERJ      IN WHICH THE SHELL MAY BE FOUND       *
C*                                                                *
C*       SUBSTR             CONTAINS THE SPACE BEING MODELED      *
C*                                                                *
C****************************************************************
      IMPLICIT INTEGER*2 (A-Z)
      COMMON/BLOCK 3/ SUBSTR(100,100,16)
      COMMON/BLOCK6/BIOSTO(6046)
      COMMON/BLOCK7/LOLIMI,HILIMI,LOLIMJ,HILIMJ,LOWERI,
     1UPPERI,LOWERJ,UPPERJ
      COMMON/BLOCK 9/ DIRCTR(5,5,2,2,2)
      COMMON/BLCK 11/ STCMXK(5,2,2)
      COMMON/BLCK 15/ ISTO(2050),JSTO(2050),KSTO(2050)
     1,DSTO(2050),LIVLVL(16,3)
      COMMON /BLCK 20/ AGECLS(6,3),LIVING(6,3)
      COMMON/SWIT/IYEAR
      INTEGER*2 LIFMAX(2)/5,4/
      LIFSV=LIFDUR
    2 IF (LIFDUR .GT. 4) LIFDUR=LIFMAX(SPECIE)
      LIFE=2
      DO 19 N=LOW,HIGH
C****************************************************************
C*                                                              *
C*      IF THE INDIVIDUAL IS ALREADY DEAD,                      *
C*      KILL THE NEXT INDIVIDUAL                                *
C*                                                              *
C****************************************************************
      IF (KSTO(N) .EQ. 0) GO TO 19
      IF (JSTO(N) .EQ. 0) GO TO 19
C****************************************************************
C*                                                              *
C*      RETRIEVE THE COORDINATES OF THE INDIVIDUAL              *
C*                                                              *
C****************************************************************
      ICOORD=ISTO(N)
      JCOORD=JSTO(N)
      KCOORD=KSTO(N)
      DIR=DSTO(N)
      IF (DIR .GT. 4) GO TO 3
      ORI=1
      GO TO 4
    3 DIR=DIR-4
      ORI=2
    4 UPPERK=KCOORD+STCMXK(LIFDUR,SPECIE,LIFE)
```

```
      LOWERK=KCOORD
      KSTO(N)=0
    5 GO TO (6,12,6,12),DIR
C*****************************************************************
C*                                                               *
C*       REPLACING THE LIVE INDIVIDUALS ORIENTED 0,45,180,       *
C*       AND 225 DEGREEES WITH THEIR DEAD COUNTERPARTS           *
C*                                                               *
C*****************************************************************
    6 DO 11 K=LOWERK,UPPERK
      IF (K .GT. 16) GO TO 19
      M=K-KCOORD+1
      IF (SPECIE .EQ. 1.OR. TIMEPS .EQ. 2 .OR. LIFDUR .EQ.1)
     1GO TO 20
      CALL ZERO01(ICOORD,JCOORD,M,DIR,LIFDUR,ORI,TIMEPS,K)
   20 CTR2=DIRCTR(M,LIFDUR,LIFE,ORI,SPECIE)
      CALL FIXIJ(ICOORD,JCOORD,M,DIR,SPECIE,LIFDUR,+19,
     1ORI,LIFE,TIMEPS)
      DO 10 I=LOWERI,UPPERI
      ICOUNT=0
      DO 10 L=LOWERJ,UPPERJ
      CTR2=CTR2+1
      J=UPPERJ-ICOUNT
      ICOUNT=ICOUNT+1
      IF (DIR .EQ. 3) J=L
      IF (SUBSTR (I,J,K) .GT. 12) GO TO 8
C*****************************************************************
C*                                                               *
C*       ELIMINATING PORTIONS OF LAST YEAR'S SHELL WHICH         *
C*       ARE FOUND WHERE THIS YEAR'S SHELL IS NOT PRESENT        *
C*                                                               *
C*****************************************************************
      IF ( I .GE. LOLIMI .AND. I .LE. HILIMI.AND.J.GE.LOLIMJ
     1 .AND. J .LE. HILIMJ .AND. SUBSTR (I,J,K) .EQ. SPECIE
     2 .AND. BICSTO(CTR2) .EQ. 0) GO TO 9
      IF (BICSTO(CTR2) .EQ. 0) GO TO 7
      SUBSTR(I,J,K)=BICSTO(CTR2)
C*****************************************************************
C*                                                               *
C*       ELIMINATING FEEDING CURRENTS                            *
C*                                                               *
C*****************************************************************
    7 IF(SUBSTR(I,J,K) .EQ. 4) SUBSTR(I,J,K)=0
      GO TO 10
C*****************************************************************
C*                                                               *
C*       REPLACING THE NUMBER WHICH UNIQUELY IDENTIFIES          *
C*       WHERE AN INDIVIDUAL SETTLED WITH A NUMBER WHICH         *
C*       INDICATES THE INDIVIDUAL IS DEAD                        *
C*                                                               *
C*****************************************************************
```

```
    8 IF (SUBSTR(I,J,K) .EQ. N) SUBSTR(I,J,K)=BIOSTO(CTR2)
      GO TO 10
    9  SUBSTR(I,J,K)=0
   10 CONTINUE
   11 CONTINUE
      IF (SPECIE .EQ. 1 .OR. LIFDUR .EQ. 1 .OR. TIMEPS
     1 .EQ. 2) GO TO 18
      M=M+1
      K=UPPERK+1
      CALL ZERO01 (ICOORD,JCOORD,M,DIR,LIFDUR,ORI,TIMEPS,K)
      GO TO 18
C*************************************************************
C*                                                           *
C*      REPLACING THE LIVE INDIVIDUALS ORIENTED 90,135,270,* *
C*      AND 315 DEGREEES WITH THEIR DEAD COUNTERPARTS        *
C*                                                           *
C*************************************************************
   12 DO 17 K=LOWERK,UPPERK
      IF (K .GT. 16) GO  TO 19
      M=K-KCOORD+1
      IF (SPECIE .EQ. 1.OR. TIMEPS .EQ. 2.OR. LIFDUR .EQ. 1)
     1GO TO 21
      CALL ZERO02(ICOORD,JCOORD,M,DIR,LIFDUR,ORI,TIMEPS,K)
   21 CTR2=DIRCTR(M,LIFDUR,LIFE,ORI,SPECIE)
      CALL FIXIJ(ICOORD,JCOORD,M,DIR,SPECIE,LIFDUR,+19
     1,ORI,LIFE,TIMEPS)
      DO 16 J=LOWERJ,UPPERJ
      ICOUNT=0
      DO 16 L=LOWERI,UPPERI
      CTR2=CTR2+1
      I=UPPERI-ICOUNT
      ICOUNT=ICOUNT+1
      IF (DIR .EQ. 4) I=L
      IF (SUBSTR (I,J,K) .GT. 12) GO TO 14
C*************************************************************
C*                                                           *
C*      ELIMINATING PORTIONS OF LAST YEAR'S SHELL WHICH      *
C*      ARE FOUND WHERE THIS YEAR'S SHELL IS NOT PRESENT     *
C*                                                           *
C*************************************************************
      IF I .GE. LOLIMI .AND. I .LE. HILIMI .AND.J.GE.LOLIMJ
     1 .AND. J .LE. HILIMJ .AND. SUBSTR (I,J,K) .EQ. SPECIE
     2 .AND. BIOSTO(CTR2) .EQ. 0) GO TO 15
      IF (BIOSTO(CTR2) .EQ. 0) GO TO 13
      SUBSTR(I,J,K)=BIOSTO(CTR2)
C*************************************************************
C*                                                           *
C*      ELIMINATING FEEDING CURRENTS                         *
C*                                                           *
C*************************************************************
   13 IF(SUBSTR(I,J,K) .EQ. 4) SUBSTR(I,J,K)=0
```

```
      GO TO 16
C*****************************************************************
C*                                                               *
C*       REPLACING THE NUMBER WHICH UNIQUELY IDENTIFIES          *
C*       WHERE AN INDIVIDUAL SETTLED WITH A NUMBER WHICH         *
C*       INDICATES THE INDIVIDUAL IS DEAD                        *
C*                                                               *
C*****************************************************************
   14 IF (SUBSTR(I,J,K) .EQ. N) SUBSTR(I,J,K)=BIOSTO(CTR2)
      GO TO 16
   15  SUBSTR(I,J,K)=0
   16 CONTINUE
   17 CONTINUE
      IF (SPECIE .EQ. 1 .OR. LIFDUR .EQ. 1 .OR. TIMEPS
     1 .EQ. 2) GO TO 18
      M=M+1
      K=UPPERK+1
      CALL ZERO12 (ICOORD,JCOORD,M,DIR,LIFDUR,ORI,TIMEPS,K)
   18 IF (TIMEPS .EQ. 2) GO TO 19
C*****************************************************************
C*                                                               *
C*       ADDING ANOTHER DEAD SHELL TO THE ARRAY WHICH            *
C*       KEEPS TRACK OF THE MORTALITIES WITHIN EACH              *
C*       AGE CLASS                                               *
C*                                                               *
C*****************************************************************
      AGECLS(LIFDUR,SPECIE)=AGECLS(LIFDUR,SPECIE)+1
   19 CONTINUE
      RETURN 1
      END
      SUBROUTINE GROW (HIGH,LOW,IX)
C*****************************************************************
C*                                                               *
C*       THIS SUBROUTINE GROWS COLONIES OF STICTOPORA            *
C*       BLACKENSIS IN THE PLOT.  COLONIES ARE NOT ALLOWED       *
C*       TO OVERLAP OR GROW OUT OF THE PLOT                      *
C*                                                               *
C*                                                               *
C*              *****  VARIABLES *****                          *
C*                                                               *
C*       NAME              FUNCTION                              *
C*                                                               *
C*       AGECLS            CONTAINS THE NUMBER OF DEAD           *
C*                         INDIVIDUALS FOR EACH SPECIES BY       *
C*                         AGE CLASS                             *
C*                                                               *
C*                                                               *
C*       LOW,HIGH          POINTERS TO THE UPPER AND LOWER       *
C*                         BOUNDS OF THE COHORT                  *
C*                                                               *
C*       I,J,K             THE COORDINATES OF A CELL WHICH THE*
```

```
C*                          GROWING COLONY WILL FILL                    *
C*                                                                      *
C*       IPAT,JPAT,         DEFINE THE SHAPE OF A BRYOZOAN              *
C*       KPAT               COLONY                                      *
C*                                                                      *
C*       IX                 SEED FOR RANDU                              *
C*                                                                      *
C*       ISTO,JSTO,         STORE THE COORDINATES OF THE                *
C*       KSTO,DSTO          INDIVIDUAL AND THE DIRECTION IT             *
C*                          FACES                                       *
C*                                                                      *
C*       L                  UNIQUE NUMBER FOR EACH ORGANISM.            *
C*                          IDENTIFIES ALL CELLS FILLED BY A            *
C*                          PARTICULAR INDIVIDUAL.                      *
C*                                                                      *
C*       LIVING             CONTAINS THE NUMBER OF LIVING               *
C*                          INDIVIDUALS FOR EACH SPECIES BY             *
C*                          AGE CLASSES                                 *
C*                                                                      *
C*       M                  POINTER TO ARRAYS CONTAINING THE            *
C*                          SHAPE OF THE BRYZOAN COLONY                 *
C*                                                                      *
C*       SUBSTR             STORES THE SPACE BEING SIMULATED            *
C*                                                                      *
C**********************************************************************
      IMPLICIT INTEGER*2 (A-Z)
      COMMON/BLOCK 3/ SUBSTR(100,100,16)
      COMMON/BLCK 15/ ISTO(2050),JSTO(2050),KSTO(2050)
     1,DSTO(2050),LIVLVL(16,3)
      COMMON /BLCK 20/ AGECLS(6,3),LIVING(6,3)
      INTEGER*2 IPAT(12)/9*0,1,2,3/,JPAT(12)/4*0,1,2,3,5*0/
     1,KPAT(12)/1,2,3,4,4,5,6,5,6,5,6,7/
      INTEGER*4 IX
C**********************************************************************
C*                                                                      *
C*       PROCESS A COHORT OF STICTOPORA LARVAE                          *
C*                                                                      *
C**********************************************************************
      DO 3 L=LOW,HIGH
C**********************************************************************
C*                                                                      *
C*       GROWING A COLONY                                               *
C*                                                                      *
C**********************************************************************
      DO 2 M=1,12
      I=IPAT(M)+ISTO(L)
      J=JPAT(M)+JSTO(L)
      K=KPAT(M)+KSTO(L)
C**********************************************************************
C*                                                                      *
C*       KEEPING COLONY WITHIN THE SPACE BEING MODELLED                 *
```

```
C*                                                                    *
C**********************************************************************
      IF (I .GT. 100 .OR. J .GT. 100 .OR. K .GT.16) GO TO 3
C**********************************************************************
C*                                                                    *
C*       IF THE CELL IS FULL DO NOT ALLOW A COLONY TO GROW            *
C*       INTO THE CELL                                                *
C*                                                                    *
C**********************************************************************
      IF (SUBSTR(I,J,K) .NE. 0) GO TO 2
C**********************************************************************
C*                                                                    *
C*       FILL CELL WITH PART OF THE COLONY                            *
C*                                                                    *
C**********************************************************************
      SUBSTR(I,J,K)=L
    2 CONTINUE
    3 CONTINUE
C**********************************************************************
C*                                                                    *
C*       CALL ZERO TO KILL ALL THE COLONIES                           *

C*                                                                    *
C**********************************************************************
      CALL ZERO(HIGH,LOW,IX)
C**********************************************************************
C*                                                                    *
C*       UPDATING THE ARRAYS WHICH RECORD THE NUMBER                  *
C*       OF LIVING AND DEAD INDIVIDUALS IN THE MODEL                  *
C*                                                                    *
C**********************************************************************
      LIVING(1,3)=HIGH-LOW+1
      AGECLS(1,3)=AGECLS(1,3)+LIVING(1,3)
      RETURN
      END
      SUBROUTINE FALL (HIGH,LOW,IX)
C**********************************************************************
C*                                                                    *
C*       THIS SUBROUTINE FILLS EMPTY CELLS IN THE PLOT                *
C*       WITH PIECES OF DEAD BRYOZOAN COLONIES                        *
C*                                                                    *
C*                                                                    *
C*              ****  VARIABLES  ****                                 *
C*                                                                    *
C*       NAME              FUNCTION                                   *
C*                                                                    *
C*       CNTR              COUNTS HOW MANY STACKS OF CELLS            *
C*                         HAVE BEEN SEARCHED                         *
C*                                                                    *
C*       I,J               CORDINATES OF THE STACK OF CELLS           *
C*                         WHICH WILL BE SEARCHED                     *
```

```
C*                                                                     *
C*       ISTO,JSTO,        STORE THE COORDINATES OF THE               *
C*       KSTO,DSTO         INDIVIDUAL AND THE DIRECTION IT            *
C*                         FACES                                      *
C*                                                                    *
C*       K1,K2,            VERTICAL LIMITS ON THE STACK OF            *
C*                         CELLS AT THE I,J COORDINATES THAT          *
C*                         WILL BE SEARCHED FOR EMPTY CELLS           *
C*                                                                    *
C*       PIECES            CONTAINS THE NUMBER OF PIECES OF           *
C*                         THE COLONY LEFT TO SCATTER IN              *
C*                         THE PLOT                                   *
C*                                                                    *
C*       SUBSTR            STORES THE SPACE BEING SIMULATED           *
C*                                                                    *
C**********************************************************************
      IMPLICIT INTEGER*2 (A-S)
      COMMON/BLOCK 3/ SUBSTR(100,100,16)
      COMMON/BLOCK 15/ ISTO(2050),JSTO(2050),KSTO(2050)
     1,DSTO(2050),LIVLVL(16,3)
      COMMON /BLOCK 21/ PIECES (250)
      INTEGER*4 IY,IX
      REAL*4 YFL
      NUM=0
      DO 7 N=LOW,HIGH
C**********************************************************************
C*                                                                    *
C*       SETTING THE VERTICAL LIMITS ON THE STACK OF CELLS            *
C*       WHICH WILL BE SEARCHED AT A SET OF I,J COORDINATES           *
C*                                                                    *
C**********************************************************************
      NUM=NUM+1
      K1=KSTO(N)-1
      K2=KSTO(N)+10
      IF (K1 .LT. 1)K1=1
      IF(K2 .GT. 16) K2=16
C**********************************************************************
C*                                                                    *
C*       GENERATING THE I,J COORDINATES                               *
C*                                                                    *
C**********************************************************************
    2 CALL RANDU (IX,IY,YFL)
      IX=IY
      I=YFL*100
      IF (I .GT. 100 .OR. I .LT. 1) GO TO 2
    3 CALL RANDU (IX,IY,YFL)
      IX=IY
      J=YFL*100
      IF (J .GT. 100 .OR. J .LT. 1) GO TO 3
      DO 4 K=K1,K2
      IF (SUBSTR(I,J,K) .NE. 0) GO TO 4
```

```
C*************************************************************
C*                                                           *
C*       FILLING AN EMPTY CELL                               *
C*                                                           *
C*************************************************************
       SUBSTR(I,J,K)=7
       PIECES(NUM)=PIECES(NUM)-1
       IF (PIECES(NUM) .LE. 0) GO TO 7
       GO TO 2
     4 CONTINUE
C*************************************************************
C*                                                           *
C*       IF NO EMPTY CELLS HAVE BEEN FOUND FOR A PIECE       *
C*       OF DEAD STICTOPORA COLONY AFTER SEARCHING 50        *
C*       STACKS OF CELLS, WRITE A MESSAGE INDICATING THIS    *
C*       AND GO ON TO THE NEXT PIECE                         *
C*                                                           *
C*************************************************************
     5 CNTR=CNTR+1
       IF (CNTR .LT. 50) GO TO 2
     6 WRITE (6,1000)
  1000 FORMAT(1H ,10X,'FAILED TO FIND AN EMPTY CELL IN 50 '
      1,'STACKS')
     7 CNTR=0
       RETURN
       END
       SUBROUTINE REGROW (LOWERK,NUM)
C*************************************************************
C*                                                           *
C*       THIS SUBROUTINE LIFTS INDIVIDUALS WHICH HAVE        *
C*       SETTLED ON TOP OF THE GROWING SHELL SO THAT         *
C*       THEY REMAIN ON THE UPPER SURFACE OF THE SHELL       *
C*                                                           *
C*                                                           *
C*                ****  VARIABLES  ****                      *
C*                                                           *
C*       NAME              FUNCTION                          *
C*                                                           *
C*                                                           *
C*       NISAV,NJSAV       STORE THE I,J COORDINATES OF SHELLS*
C*                         LIFTED BY GROWING SHELLS          *
C*                                                           *
C*       I,J               AN INDIVIDUAL'S HORIZONTAL COORD. *
C*                                                           *
C*       K                 AN INDIVIDUAL'S VERTICAL COORDINATE*
C*                                                           *
C*       MARK              IDENTIFYING = FOR AN INDIVIDUAL   *
C*                                                           *
C*       NSAVE             STORES THE IDENTIFYING NUMBERS FOR *
C*                         ALL INDIVIDUALS WHICH WERE LIFTED *
C*                                                           *
```

```
C*       KSTO              STORES VERTICAL COORDINATES OF ALL *
C*                         INDIVIDUALS AFTER THEY ARE LIFTED  *
C*                                                            *
C*       SUBSTR            CONTAINS THE PLOT BEING MODELLED   *
C*                                                            *
C*                                                            *
C************************************************************
      IMPLICIT INTEGER*2 (A-Z)
      COMMON/BLOCK 3/ SUBSTR(100,100,16)
      COMMON/BLOCK2/HIGHSV(20),LOWSV(20),LIFDST(20),
     1SPECSV(20)
      COMMON/BLCK 15/ ISTO(2050),JSTO(2050),KSTO(2050)
     1,DSTO(2050),LIVLVL(16,3)
      COMMON /BLCK 24/NSAVE(500),NJSAV(500),NISAV(500)
      DO 3 L=1,NUM
C************************************************************
C*                                                            *
C*       RETRIEVE THE I,J COORDINATES OF AN INDIVIDUAL        *
C*       WHICH IS TO BE LIFTED                                *
C*                                                            *
C************************************************************
      I=NISAV(L)
      J=NJSAV(L)
      IF (I .LT. 1 .OR. I .GT. 100 .OR. J .LT. 1
     1.OR. J .GT. 100) GO TO 3
C************************************************************
C*                                                            *
C*       CHECK FOR THE LOWEST EMPTY CELL AT THE I,J           *
C*       COORDINATES WHERE THE INDIVIDUAL SETTLED             *
C*                                                            *
C************************************************************
      DO 2 K=LOWERK,16
      IF (SUBSTR(I,J,K) .NE. 0) GO TO 2
      MARK=NSAVE(L)
      IF (MARK .GT. 12) KSTO(MARK)=K
C************************************************************
C*                                                            *
C*       PLACING THE IDENTIFYING NUMBER OF THE INDIVIDUAL     *
C*       IN THE EMPTY CELL                                    *
C*                                                            *
C************************************************************
      SUBSTR(I,J,K)=MARK
    2 CONTINUE
    3 CONTINUE
      RETURN
      END
      SUBROUTINE BIOTA (SPECIE,LOW,HIGH,LIFDUR,CONTAC,
     1TIMEPS,YEAR,N1)
C************************************************************
C*                                                            *
C*       IN THIS SUBROUTINE INDIVIDUALS OF THE TWO            *
```

```
C*      BRACHIOPOD SPECIES GROW OR DIE AT THE BEGINNING      *
C*      OF EACH YEAR.  IF ALL INDIVIDUALS IN A COHORT        *
C*      HAVE LIVED PAST THE MAXIMUM AGE ATTAINED BY          *
C*      THE AVERAGE INDIVIDUAL OF THEIR SPECIES, THEN        *
C*      THE SUBROUTINE MORTAL IS CALLED TO HANDLE THEIR      *
C*      DEATHS.  OTHERWISE SUBROUTINES REGEN1 AND REGEN2     *
C*      WILL GROW THE INDIVIDUAL'S SHELL TO THE NEXT         *
C*      LARGEST SHELL SIZE.  SUBROUTINES LIFT AND REGROW     *
C*      ARE CALLED WHEN A SHELL INCREASES ITS THICKNESS      *
C*      AND GROWS IN SEVERAL LAYERS OF THE PLOT, THUS        *
C*      NECESSITATING THE LIFTING OF EVERY ORGANISM WHICH    *
C*      WHICH HAD SETTLED ON THE INDIVIDUAL'S SHELL.         *
C*                                                           *
C*                                                           *
C*              ****  VARIABLES  ****                        *
C*                                                           *
C*      NAME              FUNCTION                           *
C*                                                           *
C*      CONCTR            COUNTS THE NUMBER OF CELLS A SHELL *
C*                        SHARES WITH NEIGHBORING SHELLS     *
C*                        DURING A YEAR'S GROWTH             *
C*                                                           *
C*      LIFDUR            THE AGE OF THE COHORT              *
C*                                                           *
C*      SPECIES           SPECIES THE COHORT BELONGS TO      *
C*                                                           *
C*      LOW,HIGH          UPPER AND LOWER LIMITS OF COHORT   *
C*                                                           *
C*      CONTAC            THE NUMBER OF CELLS A GROWING SHELL*
C*                        MAY SHARE WITH ANOTHER SHELL BEFORE*
C*                        IT DIES OF OVERCROWDING            *
C*                                                           *
C*      TIMERS            SWITCH INDICATING WHETHER SHELLS   *
C*                        ARE TO GROW OR INDIVIDUALS LIFTED  *
C*                        BY GROWING SHELLS ARE TO BE REGROWN*
C*                        AT THEIR NEW LOCATIONS             *
C*                                                           *
C*      IYEAR             YEAR IN THE SUCCESSION             *
C*                                                           *
C*      N1                POINTER TO THE YEAR IN WHICH THE   *
C*                        COHORT SETTLED IN THE PLOT         *
C*                                                           *
C*      LIFOST            STORES THE YEAR EACH COHORT        *
C*                        SETTLED IN THE PLOT                *
C*                                                           *
C*      ICOORD,JCOORD     COORDINATES OF AN INDIVIDUAL       *
C*      KCOORD                                               *
C*                                                           *
C*      DIR,ORI           TOGATHER DEFINE THE DIRECTION      *
C*                        AN INDIVIDUAL IS FACING            *
C*                                                           *
```

```
C*      LOWERK,UPPERK   THE VERTICAL LIMITS OF THE SHELL    *
C*                                                          *
C*                                                          *
C*      M               THICKNESS OF AN INDIVIDUAL          *
C*                                                          *
C*                                                          *
C************************************************************
      IMPLICIT INTEGER*2 (A-Z)
      COMMON/BLOCK2/HIGHSV(20),LOWSV(20),LIFEST(20),
     1SPECSV(20)
      COMMON/BLOCK 3/ SUBSTR(100,100,16)
      COMMON/BLOCK7/LOLIMI,HILIMI,LOLIMJ,HILIMJ,LOWERI,
     1UPPERI,LOWERJ,UPPERJ
      COMMON/BLOCK 11/ STOMXK(5,2,2)
      COMMON/BLOCK 15/ ISTO(2050),JSTO(2050),KSTO(2050)
     1,DSTO(2050),LIVLVL(16,3)
      INTEGER*2 TRIGER(2)/6,5/
      REAL*4 CONCTR
      LIFE=1
      IF (LIFDUR .LT. TRIGER(SPECIE)) GO TO 2
      LIFEST(N1)=0
      CALL MORTAL (SPECIE,LIFDUR,+15,HIGH,LOW,TIMEPS)
    2 DO 14 N=LOW,HIGH
      IF (KSTO(N) .EQ. 0) GO TO 14
      IF (JSTO(N) .EQ. 0) GO TO 14
      ICOORD=ISTO(N)
      JCOORD=JSTO(N)
      KCOORD=KSTO(N)
      DIR=DSTO(N)
      IF (DIR .GT. 4) GO TO 3
      ORI=1
      GO TO 4
    3 DIR=DIR-4
      ORI=2
    4 LOWERK=KCOORD
      UPPERK=KCOORD+STOMXK(LIFDUR,SPECIE,LIFE)
    5 GO TO (10,6,10,6),DIR
C************************************************************
C*                                                          *
C*      GROWING SHELLS ORIENTED  0, 45, 180 AND 225 DEG.    *
C*                                                          *
C************************************************************
    6 IF (TIMEPS .EQ. 2) GO TO 7
C************************************************************
C*                                                          *
C*      RAISING THE LOCATION OF ORGANISMS LIVING            *
C*      ON TOP OF THE GROWING SHELL                         *
C*                                                          *
C************************************************************
      IF (UPPERK.GT. LOWERK) CALL LIFT(LOWERK,UPPERK,NUM,
     1,ICOORD,JCOORD,KCCORD,DIR,SPECIE,LIFDUR,+14,ORI,LIFE
```

```
     2,TIMEPS)
    7 CONCTR=0
      DO 9 K=LOWERK,UPPERK
    8 IF (K .GT. 16) GO TO 13
      M=K-KCOORD+1
      CALL REGEN1(ICOORD,JCOORD,M,DIR,SPECIE,LIFDUR,ORI,
     1LIFE,K,CONTAC,N,TIMEPS,IYEAR,CONCTR)
    9 CONTINUE
C*************************************************************
C*                                                           *
C*       IF THIS IS THE SECOND PASS DO NOT GROW THE SHELL    *
C*                                                           *
C*************************************************************
      IF (TIMEPS .EQ. 2) GO TO 14
C*************************************************************
C*                                                           *
C*       RECREATING THE ORGANISMS WHICH WERE LIFTED BY       *
C*       THE SHELL AT THEIR NEW LOCATIONS                    *
C*                                                           *
C*************************************************************
      IF (UPPERK.GT. LOWERK) CALL REGROW(LOWERK,NUM)
      GO TO 14
C*************************************************************
C*                                                           *
C*       GROWING SHELLS ORIENTED 90,135,270 AND 315 DEG.     *
C*                                                           *
C*************************************************************
   10 IF (TIMEPS .EQ. 2) GO TO 11
C*************************************************************
C*                                                           *
C*       RAISING THE LOCATION OF ORGANISMS LIVING            *
C*       ON TOP OF THE GROWING SHELL                         *
C*                                                           *
C*************************************************************
      IF (UPPERK.GT. LOWERK) CALL LIFT(LOWERK,UPPERK,NUM,
     1ICOORD,JCOORD,KCOORD,DIR,SPECIE,LIFDUR,+14,ORI,LIFE,
     2TIMEPS)
   11 CONCTR=0
      DO 12 K=LOWERK,UPPERK
      IF (K .GT. 16) GO TO 13
      M=K-KCOORD+1
      CALL REGEN2(ICOORD,JCOORD,M,DIR,SPECIE,LIFDUR,ORI,
     1LIFE,K,CONTAC,N,TIMEPS,IYEAR,CONCTR)
   12 CONTINUE
C*************************************************************
C*                                                           *
C*       IF THIS IS THE SECOND PASS DO NOT GROW THE SHELL    *
C*                                                           *
C*************************************************************
      IF (TIMEPS .EQ. 2) GO TO 14
C*************************************************************
```

```
C*                                                                     *
C*       RECREATING THE ORGANISMS WHICH WERE LIFTED BY                 *
C*       THE SHELL AT THEIR NEW LOCATIONS                              *
C*                                                                     *
C*********************************************************************
      IF (UPPERK.GT. LOWERK) CALL REGROW(LOWERK,NUM)
      GO TO 14
   13 WRITE(6,1000)ICCORD,JCOORD,KCOORD,M,SPECIE,LIFDUR
 1000 FORMAT (1H ,6(I2,2X))
   14 CONTINUE
   15 RETURN
      END
      SUBROUTINE REGEN1(ICCORD,JCOORD,M,DIR,SPECIE,LIFDUR,
     1ORI,LIFE,K,CONTAC,N,TIMEPS,IYEAR,CONCTR)
C*********************************************************************
C*                                                                     *
C*       THIS SUBROUTINE GROWS AN INDIVIDUAL ORGANISM                  *
C*       ORIENTED 0, 45, 180 AND 225 DEGREES TO THE                    *
C*       NEXT LARGEST SIZE ATTAINED BY THE AVERAGE                     *
C*       INDIVIDUAL OF ITS SPECIES.  IF WHILE INCREASING               *
C*       THE SIZE OF THE GROWING ORGANISM THE NUMBER OF                *
C*       CONTACTS BETWEEN THE SHELL AND ITS NEIGHBORS                  *
C*       EXCEEDS THE MAXIMUM NUMBER OF CONTACTS ALLOWED                *
C*       AN INDIVIDUAL OF ITS AGE CLASS, THE SUBROUTINE                *
C*       MORTAL IS CALLED TO HANDLE THE INDIVIDUAL'S DEATH.            *
C*                                                                     *
C*                                                                     *
C*                          ****  VARIABLES  ****                      *
C*                                                                     *
C*       NAME                FUNCTION                                  *
C*                                                                     *
C*       BIOSTO              CONTAINS THE MODELS OF INDIVIDUALS        *
C*                           WHICH REPLACE THE CURRENT MODEL OF        *
C*                           THE ORGANISM WHEN IT GROWS OR DIES        *
C*                                                                     *
C*       LOLIMI,HILIMI       BOUNDS ON THE AREA IN WHICH THE           *
C*       LOLIMJ,HILIMJ       SHELL IS REPLACED BY A NEW MODEL          *
C*                           WITHOUT CHECKING FOR CONTACTS WITH        *
C*                           NEIGHBORING SHELLS                        *
C*                                                                     *
C*       LOWERI,UPPERI       BOUNDS ON THE AREA IN WHICH A NEW         *
C*       LOWERJ,UPPERJ       MODEL WILL REPLACE THE SHELL              *
C*                                                                     *
C*       SUBSTR              CONTAINS THE AREA BEING SIMULATED         *
C*                                                                     *
C*       DIRCTR              CONTAINS POINTERS TO THE BEGINNINGS       *
C*                           OF INDIVIDUAL MODELS STORED IN THE        *
C*                           ARRAY BIOSTO                              *
C*                                                                     *
C*       ISTO,JSTO,          CONTAIN THE LOCATION + ORIENTATION        *
C*       KSTO,OSTO,          OF INDIVIDUAL ORGANISMS                   *
```

```
C*       OSTO                                                          *
C*                                                                     *
C*       LIVLVL          RECORDS THE NUMBER OF  INDIVIDUALS            *
C*                       ALIVE AT EACH LEVEL IN THE MODEL              *
C*                                                                     *
C*       LIVING          RECORDS THE NUMBER OF LIVING                  *
C*                       INDIVIDUALS IN EACH AGE CLASS FOR             *
C*                       THE CURRENT YEAR                              *
C*                                                                     *
C*       AGECLS          RECORDS THE NUMBER OF DEAD                    *
C*                       INDIVIDUALS IN EACH AGE CLASS                 *
C*                                                                     *
C*       ICOUNT          DETERMINES THE ORDER IN WHICH CELLS*
C*                       ARE FILLED WHEN SHELLS ORIENTED 180*
C*                       AND 225 DEGREES GROW                          *
C*                                                                     *
C*       CTR2            IS A POINTER TO THE ELEMENTS OF               *
C*                       BIOSTO WHICH WILL REPLACE THE                 *
C*                       CONTENTS OF THE CELLS IN THE PLOT             *
C*                       AS THE LIVING BRACHIOPOD GROWS                *
C*                                                                     *
C*********************************************************************
      IMPLICIT INTEGER*2 (A-Z)
      REAL*4 CONCTR
      COMMON/BLOCK 3/ SUBSTR(100,100,16)
      COMMON/BLOCK6/BIOSTO(6046)
      COMMON/BLOCK7/LOLIMI,HILIMI,LOLIMJ,HILIMJ,LOWERI,
     1UPPERI,LOWERJ,UPPERJ
      COMMON/BLOCK 9/ DIRCTR(5,5,2,2,2)
      COMMON/BLCK 15/ ISTO(2050),JSTO(2050),KSTO(2050)
     1,DSTO(2050),LIVLVL(16,3)
      COMMON /BLCK 20/ AGECLS(6,3),LIVING(6,3)
5000  CONTINUE
      CTR2=DIRCTR(M,LIFDUR,LIFE,ORI,SPECIE)
C*********************************************************************
C*                                                                     *
C*       ESTABLISHING THE UPPER AND LOWER BOUNDS FOR THE               *
C*       AREA WHERE THE SHELL IS TO GROW                               *
C*                                                                     *
C*********************************************************************
      CALL FIXIJ(ICOORD,JCOORD,M,DIR,SPECIE,LIFDUR,+6,ORI,
     1LIFE,TIMEPS)
C*********************************************************************
C*                                                                     *
C*       GROWING THE SHELL WITHIN THE AREA DEFINED BY                  *
C*       THE SUBROUTINE FIXIJ                                          *
C*                                                                     *
C*********************************************************************
      DO 5 J=LOWERJ,UPPERJ
      ICOUNT=0
      DO 5 L=LOWERI,UPPERI
```

```
      CTR2=CTR2+1
      I=UPPERI-ICCUNT
      ICOUNT=ICOUNT+1
      IF (DIP .EQ. 4) I=L
C*************************************************************
C*                                                           *
C*       WHEN REPLACING THE OLD SHELL WITH THE NEW ONE       *
C*       DO NOT CHECK FOR CONTACTS IN THE AREA ALREADY       *
C*       OCCUPIED BY THE OLD SHELL                           *
C*                                                           *
C*************************************************************
      IF ((I .GE. LOLIMI .AND. I .LE. HILIMI) .AND. (J .GE.
     1LOLIMJ .AND. J .LE. HILIMJ) .AND. (SUBSTR(I,J,K) .EQ.
     1SPECIE .OR. SUBSTR(I,J,K) .EQ. 4))GO TO 4
      IF (I .GE. LOLIMI .AND. I .LE. HILIMI .AND. J .GE.
     1LOLIMJ .AND. J .LE. HILIMJ .AND. SUBSTR(I,J,K) .GT.12)
     2GO TO 5
C*************************************************************
C*                                                           *
C*       IF AN AREA WHERE THE NEW SHELL WILL GROW IS          *
C*       EMPTY THEN FILL IT WITH A PORTION OF THE            *
C*       NEW SHELL                                           *
C*                                                           *
C*************************************************************
      IF (SUBSTR(I,J,K) .EQ. 0) GO TO 4
C*************************************************************
C*                                                           *
C*       IF THIS CELL IN THE PLOT CONTAINS THE SETTLING      *
C*       POINT OF AN INDIVIDUAL DO NOT FILL IT WITH A        *
C*       PORTION OF THE NEW SHELL.  IF AN ELEMENT OF THE     *
C*       NEW MODEL IS A ZERO OR A HALF SQUARE DO NOT CHANGE  *
C*       THE CELL IN THE PLOT WHICH IT WAS TO HAVE REPLACED  *
C*                                                           *
C*************************************************************
      IF (BIOSTO(CTR2) .EQ. 0) GO TO 5
      IF (SUBSTR(I,J,K) .GT. 7 .AND. SUBSTR(I,J,K) .LT. 13
     1.OR. BIOSTO(CTR2) .GT. 7) GO TO 2
      CONCTR=CONCTR+1
      GO TO 3
    2 CONCTR=CONCTR+.5
    3 IF (SUBSTR(I,J,K) .GT. 12 .AND. TIMEPS .EQ. 1)
     1CALL BOSKIL(IYEAR,I,J,K,CTR2)
C*************************************************************
C*                                                           *
C*       IF THE NUMBER OF CONTACTS ALLOWED FOR A PARTICULAR  *
C*       AGE CLASS HAS BEEN EXCEEDED CALL MORTAL TO KILL     *
C*       THE ORGANISM                                        *
C*                                                           *
C*************************************************************
      IF (CONCTR .GT. CONTAC) CALL MORTAL (SPECIE,LIFDUR,+6,
     1N,N,TIMEPS)
```

```
C*************************************************************
C*                                                           *
C*      IF SOMETHING IS ALREADY FILLING A CELL IN THE        *
C*      PLOT DO NOT REPLACE IT WITH A FEEDING CURRENT        *
C*                                                           *
C*************************************************************
      IF (BIOSTC(CTR2) .EQ. 4) GO TO 5
C*************************************************************
C*                                                           *
C*      FILL A SQUARE IN THE PLOT WITH A PIECE OF THE        *
C*      GROWING SHELL                                        *
C*                                                           *
C*************************************************************
    4 IF (TIMEPS .EQ. 2 .AND. SUBSTR(I,J,K) .NE. 0) GO TO 5
      SUBSTR(I,J,K)=BIOSTC(CTR2)
    5 CONTINUE
      IF (TIMEPS .EQ. 2 .OR. M .GT. 1) RETURN
      LIVING(LIFDUR,SPECIE)=LIVING(LIFDUR,SPECIE)+1
      RETURN
    6 JSTO(N)=0
      RETURN
      END
      SUBROUTINE REGEN2(ICOORD,JCOORD,M,DIR,SPECIE,LIFDUR,
     1ORI,LIFE,K,CONTAC,N,TIMEPS,IYEAR,CONCTR)
C*************************************************************
C*                                                           *
C*      THIS SUBROUTINE GROWS AN INDIVIDUAL ORGANISM         *
C*      ORIENTED 90,135,270 AND 315 DEGREES TO THE           *
C*      NEXT LARGEST SIZE ATTAINED BY THE AVERAGE            *
C*      INDIVIDUAL OF ITS SPECIES.  IF WHILE INCREASING      *
C*      THE SIZE OF THE GROWING ORGANISM THE NUMBER OF       *
C*      CONTACTS BETWEEN THE SHELL AND ITS NEIGHBORS         *
C*      EXCEEDS THE MAXIMUM NUMBER OF CONTACTS ALLOWED       *
C*      AN INDIVIDUAL OF ITS AGE CLASS, THE SUBROUTINE       *
C*      MORTAL IS CALLED TO HANDLE THE INDIVIDUAL'S DEATH.   *
C*                                                           *
C*                                                           *
C*                        ****  VARIABLES  ****              *
C*                                                           *
C*      NAME              FUNCTION                           *
C*                                                           *
C*      BIOSTC            CONTAINS THE MODELS OF INDIVIDUALS *
C*                        WHICH REPLACE THE CURRENT MODEL OF *
C*                        THE ORGANISM WHEN IT GROWS OR DIES *
C*                                                           *
C*      LOLIMI,HILIMI     BOUNDS ON THE AREA IN WHICH THE    *
C*      LOLIMJ,HILIMJ     SHELL IS REPLACED BY A NEW MODEL   *
C*                        WITHOUT CHECKING FOR CONTACTS WITH *
C*                        NEIGHBORING SHELLS                 *
C*                                                           *
C*      LOWERI,UPPERI     BOUNDS ON THE AREA IN WHICH A NEW  *
```

```
C*       LOWERJ,UPPERJ    MODEL WILL REPLACE THE SHELL          *
C*                                                              *
C*       SUBSTR           CONTAINS THE AREA BEING SIMULATED     *
C*                                                              *
C*       DIRCTR           CONTAINS POINTERS TO THE BEGINNINGS   *
C*                        OF INDIVIDUAL MODELS STORED IN THE    *
C*                        ARRAY BIOSTO                          *
C*                                                              *
C*       ISTO,JSTO,       CONTAIN THE LOCATION + ORIENTATION    *
C*       KSTO,OSTO,       OF INDIVIDUAL ORGANISMS               *
C*       OSTO                                                   *
C*                                                              *
C*       LIVLVL           RECORDS THE NUMBER OF  INDIVIDUALS    *
C*                        ALIVE AT EACH LEVEL IN THE MODEL      *
C*                                                              *
C*       LIVING           RECORDS THE NUMBER OF LIVING          *
C*                        INDIVIDUALS IN EACH AGE CLASS FOR     *
C*                        THE CURRENT YEAR                      *
C*                                                              *
C*       AGECLS           RECORDS THE NUMBER OF DEAD            *
C*                        INDIVIDUALS IN EACH AGE CLASS         *
C*                                                              *
C*       ICOUNT           DETERMINES THE ORDER IN WHICH CELLS   *
C*                        ARE FILLED WHEN SHELLS ORIENTED 270   *
C*                        AND 315 DEGREES GROW                  *
C*                                                              *
C*       CTR2             IS A POINTER TO THE ELEMENTS OF       *
C*                        BIOSTO WHICH WILL REPLACE THE         *
C*                        CONTENTS OF THE CELLS IN THE PLOT     *
C*                        AS THE LIVING BRACHIOPOD GROWS        *
C*                                                              *
C**************************************************************
      IMPLICIT INTEGER*2 (A-Z)
      COMMON/BLOCK 3/ SUBSTR(100,100,16)
      COMMON/BLOCK6/BIOSTO(6046)
      COMMON/BLOCK7/LOLIMI,HILIMI,LOLIMJ,HILIMJ,LOWERI,
     1UPPERI,LOWERJ,UPPERJ
      COMMON/BLOCK 9/ DIRCTR(5,5,2,2,2)
      COMMON/BLCK 15/ ISTO(2050),JSTO(2050),KSTO(2050)
     1,OSTO(2050),LIVLVL(16,3)
      COMMON /BLCK 20/ AGECLS(6,3),LIVING(6,3)
      REAL*4 CONCTR
      CTR2=DIRCTR(M,LIFDUR,LIFE,ORI,SPECIE)
C**************************************************************
C*                                                            *
C*       ESTABLISHING THE UPPER AND LOWER BOUNDS FOR THE      *
C*       AREA WHERE THE SHELL IS TO GROW                      *
C*                                                            *
C**************************************************************
      CALL FIXIJ(ICOORD,JCOORD,M,DIR,SPECIE,LIFDUR,+6,ORI,
     1LIFE,TIMEPS)
```

```
C*************************************************************
C*                                                           *
C*       GROWING THE SHELL WITHIN THE AREA DEFINED BY        *
C*       THE SUBROUTINE FIXIJ                                *
C*                                                           *
C*************************************************************
      DO 5 I=LOWERI,UPPERI
      ICOUNT=0
      DO 5 L=LOWERJ,UPPERJ
      CTR2=CTR2+1
      J=UPPERJ-ICOUNT
      ICOUNT=ICOUNT+1
      IF (DIR .EQ. 3) J=L
C*************************************************************
C*                                                           *
C*       WHEN REPLACING THE OLD SHELL WITH THE NEW ONE       *
C*       DO NOT CHECK FOR CONTACTS IN THE AREA ALREADY       *
C*       OCCUPIED BY THE OLD SHELL                           *
C*                                                           *
C*************************************************************
      IF ((I .GE. LOLIMI .AND. I .LE. HILIMI) .AND. (J .GE.
     1LOLIMJ .AND. J .LE. HILIMJ) .AND. (SUBSTR(I,J,K) .EQ.
     1SPECIE .OR. SUBSTR(I,J,K) .EQ. 4))GO TO 4
      IF (I .GE. LOLIMI .AND. I .LE. HILIMI .AND. J .GE.
     1LOLIMJ .AND. J .LE. HILIMJ .AND. SUBSTR(I,J,K) .GT.12)
     2GO TO 5
C*************************************************************
C*                                                           *
C*       IF AN AREA WHERE THE NEW SHELL WILL GROW IS          *
C*       EMPTY THEN FILL IT WITH A PORTION OF THE            *
C*       NEW SHELL                                           *
C*                                                           *
C*************************************************************
      IF (SUBSTR(I,J,K) .EQ. 0) GO TO 4
      IF (BIOSTO(CTR2) .EQ. 0) GO TO 5
      IF (SUBSTR(I,J,K) .GT. 7 .AND. SUBSTR(I,J,K) .LT. 13
     1.OR. BIOSTO(CTR2) .GT. 7) GO TO 2
      CONCTR=CONCTR+1
      GO TO 3
    2 CONCTR=CONCTR+.5
    3 IF (SUBSTR(I,J,K) .GT. 12 .AND. TIMEPS .EQ. 1)
     1CALL ROSKIL(IYEAR,I,J,K,CTR2)
C*************************************************************
C*                                                           *
C*       IF THE NUMBER OF CONTACTS ALLOWED FOR A PARTICULAR  *
C*       AGE CLASS HAS BEEN EXCEEDED CALL MORTAL TO KILL     *
C*       THE ORGANISM                                        *
C*                                                           *
C*************************************************************
      IF (CONCTR .GT. CONTAC) CALL MORTAL (SPECIE,LIFDUR,+6,
     1N,N,TIMEPS)
```

```
C*************************************************************
C*                                                           *
C*       IF SOMETHING IS ALREADY FILLING A CELL IN THE       *
C*       PLOT DO NOT REPLACE IT WITH A FEEDING CURRENT       *
C*                                                           *
C*************************************************************
      IF (BIOSTO(CTR2) .EQ. 4) GO TO 5
      IF (SUBSTR(I,J,K) .GT. 12) GO TO 5
C*************************************************************
C*                                                           *
C*       FILL A SQUARE IN THE PLOT WITH A PIECE OF THE       *
C*       GROWING SHELL                                       *
C*                                                           *
C*************************************************************
    4 IF (TIMEPS .EQ. 2 .AND. SUBSTR(I,J,K) .NE. 0) GO TO 5
      SUBSTR(I,J,K)=BIOSTO(CTR2)
    5 CONTINUE
      IF (TIMEPS .EQ. 2 .OR. M .GT. 1) RETURN
      LIVING(LIFDUR,SPECIE)=LIVING(LIFDUR,SPECIE)+1
      RETURN
    6 JSTO(N)=0
      RETURN
      END
      SUBROUTINE FIXIJ(ICOORD,JCOORD,K,DIR,SPECIE,LIFDUR,*,
     1ORI,LIFE,TIMEPS)
C*************************************************************
C*                                                           *
C*       THIS SUBROUTINE DEFINES THE BOUNDARIES OF THE       *
C*       AREA IN WHICH AN INDIVIDUAL WILL GROW TO THE        *
C*       NEXT LARGEST SIZE AND THE AREA IN WHICH IT IS       *
C*       NOT NECESSARY TO CHECK FOR OVERLAP WITH OTHER       *
C*       ORGANISMS.                                          *
C*                                                           *
C*              ****  VARIABLES  ****                        *
C*                                                           *
C*       NAME              FUNCTION                          *
C*                                                           *
C*       LOLIMI,LOLIMJ     STORE THE BOUNDARIES OF THE AREA  *
C*       HILIMI,HILIMJ     PRESENTLY OCCUPIED BY AN INDIVIDUAL*
C*                                                           *
C*       LOWERI,LOWERJ     STORE THE BOUNDARIES OF THE AREA  *
C*       UPPERI,UPPERJ     IN WHICH THE ORGANISM WILL GROW   *
C*                                                           *
C*       STOMXI,STOMXJ     STORE NUMBERS WHICH WHEN ADDED TO *
C*                         THE LOCATION WHERE THE INDIVIDUAL *
C*                         ORIGINALY SETTLED DEFINE THE AREA *
C*                         IN THE PLOT IN WHICH THE ORGANISM *
C*                         WILL GROW                         *
C*                                                           *
C*************************************************************
      IMPLICIT INTEGER*2(A-X)
```

```
      COMMON/BLOCK5/STOMXI(5,5,2,2,2),STOMXJ(5,5,2,2,2)
      COMMON/BLOCK7/LOLIMI,HILIMI,LOLIMJ,HILIMJ,LOWERI,
     1UPPERI,LOWERJ,UPPERJ
5000  CONTINUE
      GO TO (5,2,3,4),DIR
C*************************************************************
C*                                                           *
C*      DEFINING THE BOUNDARIES IN WHICH AN INDIVIDUAL       *
C*      GROWS AND IN WHICH OVERLAP WILL NOT BE CHECKED       *
C*      FOR THOSE INDIVIDUALS ORIENTED 0 AND 45 DEGREES      *
C*                                                           *
C*************************************************************
    2 UPPERI=ICOORD
      LOWERI=ICOORD-STOMXJ(K,LIFDUR,LIFE,ORI,SPECIE)
      UPPERJ=JCOORD+STOMXI(K,LIFDUR,LIFE,ORI,SPECIE)
      LOWERJ=JCOORD-STOMXI(K,LIFDUR,LIFE,ORI,SPECIE)
      IF (UPPERI .GT. 100.OR. UPPERJ .GT. 100.OR. LOWERI
     1.LT. 1 .OR. LOWERJ .LT. 1) GO TO 8
      IF (LIFDUR .EQ. 1) GO TO 6
      LIFDR1=LIFDUR-1
      LOLIMI=ICOORD-STOMXJ(K,LIFDR1,LIFE,ORI,SPECIE)
      HILIMI=ICOORD
      LOLIMJ=JCOORD-STOMXI(K,LIFDR1,LIFE,ORI,SPECIE)
      HILIMJ=JCOORD+STOMXI(K,LIFDR1,LIFE,ORI,SPECIE)
      GO TO 7
C*************************************************************
C*                                                           *
C*      DEFINING THE BOUNDARIES IN WHICH AN INDIVIDUAL       *
C*      GROWS AND IN WHICH OVERLAP WILL NOT BE CHECKED       *
C*      FOR THOSE INDIVIDUALS ORIENTED 90 AND 135 DEGREES    *
C*                                                           *
C*************************************************************
    3 LOWERI=ICOORD-STOMXI(K,LIFDUR,LIFE,ORI,SPECIE)
      UPPERI=ICOORD+STOMXI(K,LIFDUR,LIFE,ORI,SPECIE)
      LOWERJ=JCOORD
      UPPERJ=JCOORD+STOMXJ(K,LIFDUR,LIFE,ORI,SPECIE)
      IF (UPPERI .GT. 100.OR. UPPERJ .GT. 100.OR. LOWERI
     1.LT. 1 .OR. LOWERJ .LT. 1) GO TO 8
      IF (LIFDUR .EQ. 1) GO TO 6
      LIFDR1=LIFDUR-1
      LOLIMI=ICOORD-STOMXI(K,LIFDR1,LIFE,ORI,SPECIE)
      HILIMI=ICOORD+STOMXI(K,LIFDR1,LIFE,ORI,SPECIE)
      LOLIMJ=JCOORD
      HILIMJ=JCOORD+STOMXJ(K,LIFDR1,LIFE,ORI,SPECIE)
      GO TO 7
C*************************************************************
C*                                                           *
C*      DEFINING THE BOUNDARIES IN WHICH AN INDIVIDUAL       *
C*      GROWS AND IN WHICH OVERLAP WILL NOT BE CHECKED       *
C*      FOR THOSE INDIVIDUALS ORIENTED 180 AND 225 DEGREES   *
C*                                                           *
```

```
C*************************************************************
    4 LOWERJ=JCOORD-STOMXI(K,LIFDUR,LIFE,ORI,SPECIE)
      UPPERJ=JCOORD+STOMXI(K,LIFDUR,LIFE,ORI,SPECIE)
      LOWERI=ICOORD
      UPPERI=ICOORD+STOMXJ(K,LIFDUR,LIFE,ORI,SPECIE)
      IF (UPPERI .GT. 100.OR. UPPERJ .GT. 100.OR. LOWERI
     1.LT. 1 .OR. LOWERJ .LT. 1) GO TO 8
      IF (LIFDUR .EQ. 1) GO TO 6
      LIFDR1=LIFDUR-1
      LOLIMJ=JCOORD-STOMXI(K,LIFDR1,LIFE,ORI,SPECIE)
      LOLIMI=ICOORD
      HILIMJ=JCOORD+STOMXI(K,LIFDR1,LIFE,ORI,SPECIE)
      HILIMI=ICOORD+STOMXJ(K,LIFDR1,LIFE,ORI,SPECIE)
      GO TO 7
C*************************************************************
C*                                                           *
C*       DEFINING THE BOUNDARIES IN WHICH AN INDIVIDUAL      *
C*       GROWS AND IN WHICH OVERLAP WILL NOT BE CHECKED      *
C*       FOR THOSE INDIVIDUALS ORIENTED 270 AND 315 DEGREES  *
C*                                                           *
C*************************************************************
    5 LOWERI=ICOORD-STOMXI(K,LIFDUR,LIFE,ORI,SPECIE)
      UPPERI=ICOORD+STOMXI(K,LIFDUR,LIFE,ORI,SPECIE)
      LOWERJ=JCOORD-STOMXJ(K,LIFDUR,LIFE,ORI,SPECIE)
      UPPERJ=JCOORD
      IF (UPPERI .GT. 100.OR. UPPERJ .GT. 100.OR. LOWERI
     1.LT. 1 .OR.LOWERJ .LT. 1) GO TO 8
      IF (LIFDUR .EQ. 1) GO TO 6
      LIFDR1=LIFDUR-1
      LOLIMI=ICOORD-STOMXI(K,LIFDR1,LIFE,ORI,SPECIE)
      HILIMI=ICOORD+STOMXI(K,LIFDR1,LIFE,ORI,SPECIE)
      HILIMJ=JCOORD
      LOLIMJ=JCOORD-STOMXJ(K,LIFDR1,LIFE,ORI,SPECIE)
      GO TO 7
    6 LOLIMJ=JCOORD
      LOLIMI=ICOORD
      HILIMI=ICOORD
      HILIMJ=JCOORD
      GO TO 9
    7 IF (TIMEPS .NE. 2)RETURN
      LOLIMI=LOWERI
      LOLIMJ=LOWERJ
      HILIMI=UPPERI
      HILIMJ=UPPERJ
    9 RETURN
    8 RETURN 1
      END
      SUBROUTINE CENSUS(IYEAR)
C*************************************************************
C*                                                           *
C*       THIS SUBROUTINE PRINTS A TABLE OF:                  *
```

```
C*                                                                      *
C*          1) THE NUMBER OF INDIVIDUALS ALIVE                          *
C*             AT THE END OF THE PRESENT YEAR                           *
C*                                                                      *
C*          2) THE TOTAL NUMBER OF DEAD INDIVIDUALS                     *
C*          AT THE END OF THE PRESENT YEAR                              *
C*                                                                      *
C*          3) THE TOTAL NUMBER OF CELLS FILLED                         *
C*          IN EACH LEVEL OF THE PLOT                                   *
C*                                                                      *
C*          4) THE NUMBER OF INDIVIULS ALIVE                            *
C*          IN EACH LEVEL OF THE PLOT                                   *
C*                                                                      *
C*                                                                      *
C*               **** VARIABLES ****                                    *
C*                                                                      *
C*     NAME              FUNCTION                                       *
C*                                                                      *
C*     MAXLIF            STORES THE OLDEST AGE MEMBERS OF               *
C*                       EACH SPECIES CAN REACH                         *
C*                                                                      *
C*     IYEAR             CURRENT YEAR                                   *
C*                                                                      *
C*     AGECLS            CONTAINS NUMBER OF DEAD SHELLS BY              *
C*                       AGE FOR EACH SPECIES                           *
C*                                                                      *
C*     LIVING            STORES THE NUMBER OF LIVING SHELLS             *
C*                       BY AGE CLASS FOR EACH SPECIES                  *
C*                                                                      *
C*     SPECIE            THE SPECIES                                    *
C*                                                                      *
C*     SUM               USED TO SUM DEAD INDIVIDUALS FOR               *
C*                       EACH SPECIES                                   *
C*                                                                      *
C*     FACTOR            CONVERTS TOTAL DEAD TO 1000                    *
C*                                                                      *
C*     STAND             NUMBER OF DEAD INDIVIDUALS IN                  *
C*                       AN AGE CLASS BASED ON AN INITIAL               *
C*                       COHORT OF 1000 INDIVIDUALS                     *
C*                                                                      *
C*     SURVIV            SURVIVORSHIPS BY AGE CLASS BASED ON            *
C*                       AN INITIAL COHORT OF 1000                      *
C*                                                                      *
C*     LIVLVL            TOTAL NUMBER OF INDIVIDUALS OF EACH            *
C*                       SPECIES LIVING IN EACH LEVEL                   *
C*                                                                      *
C*     TOTAL             COUNTS THE NUMBER OF FULL CELLS IN             *
C*                       EACH LEVEL                                     *
C*                                                                      *
C*     TOP               UPPER LIMIT ON THE STACK OF LEVELS             *
C*                       TO BE CENSUSED                                 *
```

```
C*                                                                     *
C*       SUBSTR              CONTAINS THE SPACE BEING MODELLED        *
C*                                                                     *
C*       KSTO                STORES THE VERTICAL COORDINATES          *
C*                           OF ALL INDIVIDUALS IN THE MODEL          *
C*                                                                     *
C*                                                                     *
C*********************************************************************
      IMPLICIT INTEGER*2 (A-Z)
      COMMON/BLOCK 3/ SUBSTR(100,100,16)
      COMMON/BLCK 15/ ISTO(2050),JSTO(2050),KSTO(2050)
     1,DSTO(2050),LIVLVL(16,3)
      COMMON /BLCK 20/ AGECLS(6,3),LIVING(6,3)
      INTEGER*2 MAXLIF(3)/6,5,1/,PUSH/0/,LEV/1/
      REAL FACTOR,SUM,DEAD(6),SURVIV(6),ISUM,STAND
      LIM=6
      IF (IYEAR .LT. 6) LIM=IYEAR
C*********************************************************************
C*                                                                     *
C*       PRINT A TABLE CONTAINING THE TOTAL NUMBER                     *
C*       OF DEAD INDIVIDUALS AND THE NUMBER OF LIVE                    *
C*       IN EACH AGECLASS.                                             *
C*                                                                     *
C*********************************************************************
      WRITE (6,25)
   25 FORMAT (1H1,T21,'SPECIES',T35,'DEAD',T47,'LIVING',T58,
     1'YEAR'//)
      DO 4 J=1,3
      DO 4 I=1,LIM
      IF(I .GT. MAXLIF(J)) GO TO 4
      WRITE(6,5)J,AGECLS(I,J),LIVING(I,J),IYEAR
    5 FORMAT(1H ,T24,I1,T37,I4,T50,I4,T60,I2)
    4 CONTINUE
      IF (IYEAR .LT. 11) GO TO 50
C*********************************************************************
C*                                                                     *
C       CALCULATES SURVIVORSHIP FOR THE TWO BRACHIOPOD GENERA*
C*                                                                     *
C*********************************************************************
      WRITE (6,80)
   80 FORMAT(1HO//T21,'SPECIES',T36,'AGE 1',T42,'AGE 2',T48,
     1'AGE 3',T54,'AGE 4',T60,'AGE 5'/)
      DO 41 LIVED=1,2
      DO 40 SPECIE=1,2
      SUM=0.0
      LIMIT=MAXLIF(SPECIE)-1
      DO 20 I=1,LIMIT
      DEAD(I)=AGECLS(I,SPECIE)
      IF ( LIVED .EQ. 2) DEAD(I)=LIVING(I,SPECIE)
   20 SUM=SUM+DEAD(I)
      IF (SUM .EQ. 0) SUM=100
```

```
      FACTOR=1000./SUM
      ISUM=0.0
      DO 30 I=1,LIMIT
      ISUM=ISUM+DEAD(I)
      STAND=ISUM*FACTOR
   30 SURVIV(I)=1000.-STAND
      WRITE (6,73)SPECIE,(SURVIV(I),I=1,LIMIT)
   73 FORMAT (1HO,T24,I1,10X,5(F5.0,1X))
      WRITE (7,74) SPECIE,IYEAR,LIVED,(SURVIV(I),I=1,LIMIT)
   74 FORMAT (1HO,I1,10X,I3,10X,I1,10X,5(F5.0,1X))
   40 CONTINUE
   41 CONTINUE
C*****************************************************************
C*                                                               *
C*       COUNT THE NUMBER OF CELLS IN EACH LEVEL                 *
C*       WHICH ARE FULL  AND PRINT THIS TOTAL                    *
C*                                                               *
C*****************************************************************
   50 TOP=IYEAR
      IF (IYEAR .GT. 16) TOP=16
      DO 11 K=1,TOP
      TOTAL=0
      DO 10 I=1,100
      DO 10 J=1,100
   10 IF (SUBSTR(I,J,K) .GT. 0)TOTAL=TOTAL+1
   11 WRITE(6,12) TOTAL,K
   12 FORMAT(1HO,20X,I5,1X,'CELLS FILLED IN LEVEL',1X,I2)
C*****************************************************************
C*                                                               *
C*       IF THERE ARE STILL INDIVIDUALS ALIVE IN                 *
C*       LEVEL 2, TO NOT PUSH THE LEVELS ABOVE IT DOWN           *
C*                                                               *
C*****************************************************************
      IF (LIVLVL(2,1) .NE. 0 .OR. LIVLVL(2,2) .NE. 0 .OR.
     1LIVLVL(2,3) .NE. 0) GO TO 8
C*****************************************************************
C*                                                               *
C*       PUSH EACH LEVEL DOWN INTO THE ONE BELOW                 *
C*       THEN ZERO LEVEL 16                                      *
C*                                                               *
C*****************************************************************
      DO 6 K=1,15
      K2=K+1
      DO 6 I=1,100
      DO 6 J=1,100
    6 SUBSTR(I,J,K)=SUBSTR(I,J,K2)
      DO 7 I=1,100
      DO 7 J=1,100
    7 SUBSTR(I,J,16)=0
C*****************************************************************
C*                                                               *
```

```
C*       LOWER THE LOCATION OF ALL INDIVIDUALS ONE LEVEL      *
C*                                                            *
C************************************************************
      DO 13 I=1,2050
      KSTO(I)=KSTO(I)-1
   13 IF (KSTO(I) .LT. 0) KSTO(I)=0
      WRITE (6,6000)
 6000 FORMAT (1H ,'PUSHED DOWN ***************************
     1******')
      PUSH=PUSH+1
      IF (PUSH .GT. 1) CALL MAP(LEV)
C************************************************************
C*                                                          *
C*       ZEROING THE ARRAY WHICH IS USED TO COUNT           *
C*       THE NUMBER OF INDIVIDUALS ALIVE IN EACH LEVEL      *
C*                                                          *
C************************************************************
    8 DO 9 K=1,TOP
      DO 9 L=1,3
    9 LIVLVL(K,L)=0
      DO 14 I=1,6
      DO 14 J=1,3
   14 LIVING(I,J)=0
      RETURN
      END
      SUBROUTINE ZERO (HIGH,LOW,IX)
C************************************************************
C*                                                          *
C*       THIS SUBROUTINE RETURNS THE AREA OCCUPIED BY       *
C*       LIVING STICTOPORA COLONIES TO ITS EMPTY STATE      *
C*       AND COUNTS THE NUMBER OF CELLS OCCUPIED BY EACH    *
C*       LIVING COLONY SO THAT AN EQUIVALENT NUMBER OF      *
C*       CELLS MAY BE FILLED WITH THE PIECES OF DEAD        *
C*       STICTOPORA COLONIES                                *
C*                                                          *
C*                                                          *
C*              ****  VARIABLES  ****                       *
C*                                                          *
C*       NAME              FUNCTION                         *
C*                                                          *
C*       LOW,HIGH          UPPER AND LOWER BOUNDS OF COHORT *
C*                                                          *
C*       ISTO,JSTO,        STORE THE COORDINATES OF ALL     *
C*       KSTO              INDIVIDUALS IN THE MODEL         *

C*                                                          *
C*       LOWERI,UPPERI,    DEFINE THE BOUNDARY OF THE AREA  *
C*       UPPERJ,LOWERJ     OCCUPIED BY A BRYOZOAN COLONY AT *
C*                         A PARTICULAR LEVEL               *
C*                                                          *
C*       PIECES            CONTAINS THE NUMBER OF CELLS EACH *
```

```
C*                        DEAD COLONY FILLED                          *
C*                                                                    *
C*                                                                    *
C**********************************************************************
      IMPLICIT INTEGER*2 (A-Z)
      COMMON/BLOCK 3/ SUBSTR(100,100,16)
      COMMON/BLCK 15/ ISTO(2050),JSTO(2050),KSTO(2050),
     1OSTO(2050),LIVLVL(16,3)
      COMMON /BLCK 21/ PIECES (250)
      INTEGER*4 IX
      N1=0
      DO 5 L=LOW,HIGH
      N1=N1+1
      KSTART=KSTO(L)
      IF (KSTART .EQ. 0) RETURN
C**********************************************************************
C*                                                                    *
C*      ESTABLISHING THE BOUNDARIES OF THE AREA IN WHICH              *
C*      THE STICTOPORA COLONY MAY BE FOUND                            *
C*                                                                    *
C**********************************************************************
      LOWERI=ISTO(L)-5
      UPPERI=ISTO(L)+5
      LOWERJ=JSTO(L)-5
      UPPERJ=JSTO(L)+5
C**********************************************************************
C*                                                                    *
C*      INSURING THAT THE AREA WHICH WILL BE SEARCHED                 *
C*      FOR THE LIVE COLONY IS WITHIN THE PLOT                        *
C*                                                                    *
C**********************************************************************
      IF (LOWERI .LT.1) LOWERI=1
      IF (LOWERJ .LT.1) LOWERJ=1
      IF (UPPERI .GT. 100) UPPERI=100
      IF (UPPERJ .GT. 100) UPPERJ=100
      DO 4 K=KSTART,16
C**********************************************************************
C*                                                                    *
C*      ZEROING THE AREA OCCUPIED BY THE COLONY AND                   *
C*      COUNTING THE NUMBER OF CELLS OCCUPIED BY EACH                 *
C*      STICTOPORA COLONY                                             *
C*                                                                    *
C**********************************************************************
      DO 3 I=LOWERI,UPPERI
      DO 3 J=LOWERJ,UPPERJ
      IF (SUBSTR(I,J,K) .EQ. L ) GO TO 2
      GO TO 3
    2 SUBSTR(I,J,K)=0
      PIECES(N1)=PIECES(N1)+1
    3 CONTINUE
    4 CONTINUE
```

```
    5 CONTINUE
C*****************************************************************
C*                                                               *
C*       CALL FALL TO FIND EMPTY CELLS IN THE PLOT FOR           *
C*       THE PIECES OF DEAD STICTOPORA COLONIES                  *
C*                                                               *
C*****************************************************************
      CALL FALL(HIGH,LOW,IX)
      RETURN
      END
      SUBROUTINE LIFT(LOWERK,UPPERK,NUM,ICOORD,JCOORD,
     1KCOORD,DIR,SPECIE,LIFDUR,*,ORI,LIFE,TIMEPS)
C*****************************************************************
C*                                                               *
C*       THIS SUBROUTINE SAVES ALL THE ORGANISMS WHICH           *
C*       SETTLED ON A BRACHIOPOD SHELL ON THE UPPER              *
C*       SURFACE OF THE SHELL.  THIS IS ACCOMPLISHED BY          *
C*       STORING THEIR LOCATIONS AS THE SHELL GROWS UPWARD       *
C*                                                               *
C*                                                               *
C*             *****  VARIABLES  *****                          *
C*                                                               *
C*       NAME              FUNCTION                              *
C*                                                               *
C*       LOWERI,UPPERI     DEFINE THE AREA IN WHICH THE SHELL    *
C*       LOWERJ,UPPERJ     IS GROWING FOR EACH LEVEL             *
C*                                                               *
C*       SUBSTR            CONTAINS THE AREA BEING MODELLED      *
C*                                                               *
C*       NUM               COUNTS THE NUMBER OF INDIVIDUALS      *
C*                         LIFTED BY THE GROWING SHELL           *
C*                                                               *
C*       NISAV,NJSAV       STORE THE (I,J) COORDINATES OF        *
C*                         INDIVIDUALS WHICH WERE LIFTED         *
C*                                                               *
C*       NSAVE             SAVE THE IDENTIFYING NUMBERS          *
C*                         OF INDIVIDUALS WHICH WERE LIFTED      *
C*                                                               *
C*                                                               *
C*****************************************************************
      IMPLICIT INTEGER*2 (A-Z)
      COMMON/BLOCK 3/ SUBSTR(100,100,16)
      COMMON/BLOCK 15/ ISTO(2050),JSTO(2050),KSTO(2050),
     1DSTO(2050),LIVLVL(16,3)
      COMMON /BLOCK 24/NSAVE(500),NJSAV(500),NISAV(500)
5000  CONTINUE
      NUM=0
      DO 3 K=LOWERK,UPPERK
      M=K-KCOORD+1
      CALL FIXIJ(ICOORD,JCOORD,M,DIR,SPECIE,LIFDUR,+4,ORI,
     1LIFE,TIMEPS)
```

```
      IF (UPPERI.GT.100.OR.UPPERJ.GT.100.OR.LOWERI.LT.1.OR.
     1 LOWERJ.LT.1.OR.LOWERK.LT.1.OR.UPPERK.GT.16) RETURN
C*************************************************************
C*                                                           *
C*       SEARCHING THE AREA ABOVE THE SHELL FOR ORGANISMS     *
C*                                                           *
C*************************************************************
      DO 3 I=LOWERI,UPPERI
      DO 3 J=LOWERJ,UPPERJ
      IF(SUBSTR(I,J,K).GT.12.OR.SUBSTR(I,J,K).EQ.7)GO TO 2
      GO TO 3
C*                                                           *
C*                                                           *
C*       AN ORGANISM HAS BEEN FOUND: ITS IDENTIFICATION      *
C*       NUMBER AND HORIZONTAL COORDINATES ARE SAVED AND     *
C*       THE CELL CONTAINING IT IS ZEROED                    *
C*                                                           *
C*                                                           *
    2 NUM=NUM+1
      NSAVE(NUM)=SUBSTR(I,J,K)
      NISAV(NUM)=I
      NJSAV(NUM)=J
    3 SUBSTR(I,J,K)=0
    4 RETURN
      DEBUG SUBCHK
      AT 5000
      END
      SUBROUTINE ROSKIL  (IYEAR,I,J,K,CTR2)
C*************************************************************
C*                                                           *
C*       THIS SUBROUTINE KILLS ONE YEAR OLD ROSTRICELLULAS   *
C*       WHEN THEY ARE CROWDED BY NEIGHBORING SHELLS         *
C*                                                           *
C*                                                           *
C*             *****  VARIABLES  *****                      *
C*                                                           *
C*       NAME              FUNCTION                          *
C*                                                           *
C*       AGECLS            RECORDS THE NUMBER OF DEAD BY     *
C*                         SPECIES AND AGE CLASS             *
C*                                                           *
C*       I,J,K             THE INDIVIDUAL'S COORDINATES      *
C*                                                           *
C*       CTR2              POINTER TO THE SHAPE OF GROWING   *
C*                         INDIVIDUAL WHICH IS CROWDING      *
C*                         THE JUVENILE ROSTRICELLULA        *
C*                                                           *
C*       ID                POINTER TO INFORMATION ABOUT THE  *
C*                         SPECIES, AGE AND ORIENTATION      *
C*                         OF AN INDIVIDUAL                  *
C*                                                           *
```

```
C*      LIFDUR          AGE OF AN INDIVIDUAL                    *
C*                                                              *
C*      LIFDST          STORES INFORMATION ABOUT THE AGES       *
C*                      OF EACH INDIVIDUAL IN THE MODEL         *
C*                                                              *
C*      SPECSV          STORES INFORMATION ABOUT SPECIES        *
C*                      OF EACH INDIVIDUAL IN THE MODEL         *
C*                                                              *
C*      LOWSV,HIGHSV    STORE THE UPPER AND LOWER LIMITS        *
C*                      OF EACH COHORT OF ORGANISMS             *
C*                                                              *
C*      SUBSTR          CONTAINS  VOLUME BEING SIMULATED        *
C*                                                              *
C*      BIOSTO          CONTAINS THE SHAPES OF LIVING           *
C*                      AND DEAD INDIVIDUALS FOR THE TWO        *
C*                      BRACHIOPOD SPECIES                      *
C*                                                              *
C*      ISTO,JSTO,      CONTAINS THE COORDINATES AND            *
C*      KSTO,DSTO       ORIENTATIONS FOR ALL INDIVIDUALS        *
C*                      IN THE MODEL                            *
C*                                                              *
C*                                                              *
C**************************************************************
      IMPLICIT INTEGER*2 (A-Z)
      COMMON/BLOCK2/HIGHSV(20),LOWSV(20),LIFDST(20),
     1SPECSV(20)
      COMMON/BLOCK 3/ SUBSTR(100,100,16)
      COMMON/BLOCK6/BIOSTO(6046)
      COMMON/BLOCK 15/ ISTO(2050),JSTO(2050),KSTO(2050),
     1DSTO(2050),LIVLVL(16,3)
      COMMON /BLOCK 20/ AGECLS(6,3),LIVING(6,3)
5000  CONTINUE
C**************************************************************
C*                                                              *
C*      FINDING THE COHORT AND SPECIES OF THE INDIVIDUAL        *
C*      OCCUPYING THE CELL                                      *
C*                                                              *
C**************************************************************
      ID=SUBSTR(I,J,K)
      DO 2 L=1,20
      IF (LIFDST(L) .EQ. 0) RETURN
      IF (ID  .GT. LOWSV(L) .AND. ID .LT. HIGHSV(L)) GO TO 3
    2 CONTINUE
      RETURN
    3 LIFDUR=IYEAR-LIFDST(L)
      WRITE (6,4)L,LOWSV(L),HIGHSV(L)
    4 FORMAT (1H ,I2,1X,I4,1X,I4)
C**************************************************************
C*                                                              *
C*      IF THE INDIVIDUAL IS NOT A ROSTRICELLULA OF AGE 1       *
C*      DO NOT KILL IT                                          *
```

```
C*                                                                    *
C**********************************************************************
      IF (SPECSV(L) .NE. 2 .OR. LIFDUR    .NE. 1) RETURN
C**********************************************************************
C*                                                                    *
C*       IF IT IS A ROSTRICELLULA OF AGE 1, ADD 1 TO THE              *
C*       TOTAL NUMBER OF DEAD ROSTRICELLULAS, KILL THE                *
C*       INDIVIDUAL IN THE CELL AND ALLOW THE OTHER SHELL             *
C*       TO EXPAND INTO THE CELL                                      *
C*                                                                    *
C**********************************************************************
      SUBSTR(I,J,K)=BICSTC(CTR2)
      AGECLS(LIFDUR,2)=AGECLS(LIFDUR,2)+1
      JSTO(ID)=0
      RETURN
      DEBUG SUBCHK,SUBTRACE,INIT(LIFDST,LIFDUR,IYEAR)
      AT 5000
      END
      SUBROUTINE SURFAC
C**********************************************************************
C*                                                                    *
C*       THIS SUBROUTINE MAKES A CENSUS OF THE SURFACE OF             *
C*       THE SHELL DEPOSIT IN THE PLOT                                *
C*                                                                    *
C*                                                                    *
C*                                                                    *
C*             *****  VARIABLES  *****                               *
C*                                                                    *
C*       NAME              FUNCTION                                   *
C*                                                                    *
C*       HAFBCS,HAFSTR     COUNT THE NUMBER OF HALF FILLED            *
C*                         CELLS IN THE PLOT FOR BOTH                 *
C*                         BRACHIOPOD SPECIES                         *
C*                                                                    *
C*       MARK              THE TRANSFORMED VALUE OF AN ELEMENT        *
C*                         OF THE ARRAY SUBSTR USED BY A              *
C*                         COMPUTED GO TO TO BRANCH TO                *
C*                         THE PROPER COUNTERS                        *
C*                                                                    *
C*       PERBCS,PERSTR     COUNT THE NUMBER OF CELLS IN               *
C*       PERSTC            THE PLOT FILLED BY EACH SPECIES            *
C*                                                                    *
C*       SUBSTR            CONTAINS THE AREA BEING SIMULATED          *
C*                                                                    *
C**********************************************************************
      IMPLICIT INTEGER*2 (A-X)
      REAL HAFBCS,HAFSTR
      COMMON/BLOCK 3/ SUBSTR(100,100,16)
5000  CONTINUE
C**********************************************************************
C*                                                                    *
```

```
C*       ZERDING THE COUNTER FOR EACH SPECIES                  *
C*                                                             *
C*************************************************************
      PERSTR=0
      PERROS=0
      PERSTC=0
      HAFROS=0.0
      HAFSTR=0.0
C*************************************************************
C*                                                             *
C*       INCREMENTING THE PROPER COUNTER BASED ON WHICH        *
C*       SPECIES IS FOUND IN THE CELL BEING CENSUSED           *
C*                                                             *
C*************************************************************
      DO 1 I=1,100
      DO 1 J=1,100
      DO 2 K=1,16
      K1=17-K
      MARK=SUBSTR(I,J,K1)+1
      GO TO (2,3,4,5,2,3,4,5,6,7,6,7),MARK
      GO TO 1
    2 CONTINUE
      GO TO 1
    3 PERSTR=PERSTR+1
      GO TO 1
    4 PERROS=PERROS+1
      GO TO 1
    5 PERSTC=PERSTC+1
      GO TO 1
    6 HAFSTR=HAFSTR+0.5
      GO TO 1
    7 HAFROS=HAFROS+0.5
    1 CONTINUE
      PERSTR=PERSTR+HAFSTR
      PERROS=PERROS+HAFROS
C*************************************************************
C*                                                             *
C*       PRINTING THE RESULTS OF THE CENSUS                    *
C*                                                             *
C*************************************************************
      WRITE (6,9)PERSTR,PERROS,PERSTC
    9 FORMAT (1H0,T20,'STROPHOMENA SURFACE AREA=',I5/1H ,
     1T20,'ROSTRICELLULA SURFACE AREA=', I5/1H ,T20,
     2'STICTOPORA SURFACE AREA=',I5)
      RETURN
      DEBUG SUBCHK
      AT 5000
      END
      SUBROUTINE ZERO1(ICOORD,JCOORD,M,DIR,LIFDUR,ORI,
     1TIMEPS,K)
C*************************************************************
```

```
C*                                                                     *
C*                                                                     *
C*      THIS SUBROUTINE ZEROS THE AREA OCCUPIED BY LIVING              *
C*      PROTOCELLULA WHEN IT DIES. THE SUBROUTINE HANDLES              *
C*      INDIVIDUALS ORIENTED 45, 180, 225 AND 360 DEGREES              *
C*                                                                     *
C*                                                                     *
C*            *****  VARIABLES  *****                                 *
C*                                                                     *
C*      NAME              FUNCTION                                     *
C*                                                                     *
C*      DIR,ORI           DEFINE DIRECTION THE INDIVIDUAL              *
C*                        IS FACING                                    *
C*                                                                     *
C*      ICOORD,JCOORD,    COORDINATES OF THE INDIVIDUAL                *
C*      K                                                              *
C*                                                                     *
C*      LIFDUR            THE INDIVIDUAL'S AGE                         *
C*                                                                     *
C*      LIFE              IF LIFE=1 THE INDIVIDUAL IS ALIVE            *
C*                        IF LIFE=2 THE INDIVIDUAL IS DEAD             *
C*                                                                     *
C*      M                 THICKNESS OF THE INDIVIDUAL                  *
C*                                                                     *
C*      SPECIE            THE INDIVIDUAL'S SPECIES                     *
C*                                                                     *
C*********************************************************************
      IMPLICIT INTEGER*2 (A-Z)
      COMMON/BLOCK 3/ SUBSTR(100,100,16)
      COMMON/BLOCK6/BIOSTO(6046)
      COMMON/BLOCK7/LOLIMI,HILIMI,LOLIMJ,HILIMJ,LOWERI,
     1UPPERI,LOWERJ,UPPERJ
      COMMON/BLOCK 9/ DIRCTR(5,5,2,2,2)
      COMMON/BLCK 15/ ISTO(2050),JSTO(2050),KSTO(2050),
     1DSTO(2050),LIVLVL(16,3)
      COMMON/SWIT/IYEAR
 5000 CONTINUE
      SPECIE=2
      LIFE=1
C*********************************************************************
C*                                                                     *
C*       DETERMINING THE LOCATION OF THE AREA TO BE ZEROED             *
C*                                                                     *
C*********************************************************************
      CTR2=DIRCTR(M,LIFDUR,LIFE,ORI,SPECIE)
      CALL FIXIJ(ICOORD,JCOORD,M,DIR,SPECIE,LIFDUR,+6,ORI,
     1LIFE,TIMSPS)
      DO 5 J=LOWERJ,UPPERJ
      JCOUNT=0
      DO 5 L=LOWERI,UPPERI
      CTR2=CTR2+1
```

```
      I=UPPERI-ICCUNT
      ICOUNT=ICOUNT+1
      IF (DIR .EQ. 4) I=L
C*************************************************************
C*                                                           *
C*       ZEROING THE SQUARES WHICH CONTAIN PORTIONS OF       *
C*       THE LIVING ROSTRICELLULA OR ITS FEEDING CURRENTS    *
C*                                                           *
C*************************************************************
      IF (BICSTO(CTR2) .EQ. SUBSTR(I,J,K))SUBSTR(I,J,K)=0
    5 CONTINUE
    6 RETURN
      DEBUG SUBCHK
      AT 5000
      END
      SUBROUTINE ZERO02(ICCORD,JCOORD,M,DIR,LIFDUR,ORI,
     1ITIMEPS,K)
C*************************************************************
C*                                                           *
C*                                                           *
C*       THIS SUBROUTINE ZEROS THE AREA OCCUPIED BY LIVING   *
C*       ROSTRICELLULA WHEN IT DIES. THE SUBROUTINE HANDLES  *
C*       INDIVIDUALS ORIENTED 90, 135, 270 AND 315 DEGREES   *
C*                                                           *
C*                                                           *
C*             *****  VARIABLES  *****                      *
C*                                                           *
C*       NAME              FUNCTION                          *
C*                                                           *
C*       DIR,ORI           DEFINE DIRECTION THE INDIVIDUAL   *
C*                         IS FACING                         *
C*                                                           *
C*       ICOORD,JCOORD,    COORDINATES OF THE INDIVIDUAL     *
C*       K                                                   *
C*                                                           *
C*       LIFDUR            THE INDIVIDUAL'S AGE              *
C*       LIFE              IF LIFE=1 THE INDIVIDUAL IS ALIVE *
C*                         IF LIFE=2 THE INDIVIDUAL IS DEAD  *
C*                                                           *
C*       M                 THICKNESS OF THE INDIVIDUAL       *
C*                                                           *
C*       SPECIE            THE INDIVIDUAL'S SPECIES          *
C*                                                           *
C*************************************************************
      IMPLICIT INTEGER*2 (A-Z)
      COMMON/BLOCK 3/ SUBSTR(100,100,16)
      COMMON/BLOCK6/BICSTO(6046)
      COMMON/BLOCK7/LOLIMI,HILIMI,LOLIMJ,HILIMJ,LOWERI,
     1UPPERI,LOWERJ,UPPERJ
      COMMON/BLOCK 9/ DIRCTR(5,5,2,2,2)
      COMMON/BLCK 15/ ISTO(2050),JSTO(2050),KSTO(2050),
```

```
     1DSTO(2050),LIVLVL(16,3)
      COMMON/SWIT/IYEAR
 5000 CONTINUE
      IF (K .GT. 16)RETURN
      LIFE=1
      SPECIE=2
C*****************************************************************
C*                                                               *
C*       DETERMINING THE LOCATION OF THE AREA TO BE ZEROED       *
C*                                                               *
C*****************************************************************
      CTR2=DIRCTR(M,LIFDUR,LIFE,ORI,SPECIE)
      CALL FIXIJ(ICOORD,JCOORD,M,DIR,SPECIE,LIFDUR,+6,ORI,
     1LIFE,TIMEPS)
      DO 5 I=LOWERI,UPPERI
      ICOUNT=0
      DO 5 L=LOWERJ,UPPERJ
      CTR2=CTR2+1
      J=UPPERJ-ICOUNT
      ICOUNT=ICOUNT+1
      IF (DIR .EQ. 3) J=L
C*****************************************************************
C*                                                               *
C*       ZEROING THE SQUARES WHICH CONTAIN PORTIONS OF           *
C*       THE LIVING ROSTRICELLULA OR ITS FEEDING CURRENTS        *
C*                                                               *
C*****************************************************************
      IF (BIOSTO(CTR2) .EQ. SUBSTR(I,J,K))SUBSTR(I,J,K)=0
    5 CONTINUE
    6 RETURN
      DEBUG SUBCHK
      AT 5000
      END
      SUBROUTINE MAP(K)
C*****************************************************************
C*                                                               *
C*       THIS SUBROUTINE PRINTS A PLANE IN THE PLOT WITH         *
C*       ZEROS REPRESENTED AS BLANKS AND HALF FILLED CELLS       *
C*       SHOWN AS PERIODS.  IT ALSO MAKES A CENSUS OF THE        *
C*       NUMBER OF CELLS IN THE LEVEL FILLED BY EACH OF THE      *
C*       THREE SPECIES.  THE VALUE OF K DETERMINES WHICH         *
C*       OF THE 16 LEVELS IS CENSUSED AND PRINTED                *
C*                                                               *
C*                                                               *
C*             *****  VARIABLES  *****                          *
C*                                                               *
C*       NAME              FUNCTION                              *
C*                                                               *
C*       CHAR              CONTAINS THE SYMBOLS USED TO          *
C*                         REPRESENT THE CONTENTS OF CELLS       *
C*                         IN THE PLOT                           *
```

```
C*                                                                    *
C*       K                  INDICATES WHICH LEVEL IS TO BE          *
C*                          PRINTED AND CENSUSED                     *
C*                                                                   *
C*       LINE               USED TO PRINT ONE LINE OF THE           *
C*                          SELECTED LEVEL IN THE PLOT               *
C*                                                                   *
C*       STROPH,STICT       USED TO COUNT THE NUMBER OF CELLS       *
C*       ROSTRO             FILLED BY EACH SPECIES IN THE           *
C*                          LEVEL WHICH IS BEING DISPLAYED           *
C*                                                                   *
C*       SUBSTR             CONTAINS THE AREA BEING SIMULATED       *
C*                                                                   *
C*********************************************************************
      IMPLICIT INTEGER*2 (A-X)
      LOGICAL*1 LINE(100),CHAR(14)
      DATA CHAR/' ','1','2','3','4','5','6','7','.','.','.'
     1,'.',' ','*'/
      COMMON/BLOCK 3/ SUBSTR(100,100,16)
      STROPH=0
      STICT=0
      ROSTRO=0
C*********************************************************************
C*                                                                   *
C*       SETTING UP THE PRINT LINE SO THAT ZEROS WILL                *
C*       BE PRINTED AS BLANKS AND SQUARES WHICH ARE                  *
C*       HALF FILLLED WILL BE PRINTED AS PERIODS                     *
C*                                                                   *
C*********************************************************************
      DO 4 I=1,100
      DO 3 J=1,100
      IF (SUBSTR(I,J,K) .GT. 11) GO TO 2
      KK=SUBSTR(I,J,K)+1
C*********************************************************************
C*                                                                   *
C*       COUNTING THE NUMBER OF CELLS IN A LEVEL FILLED              *
C*       BY A MEMBER OF EACH SPECIES                                 *
C*                                                                   *
C*********************************************************************
      GO TO (3,5,6,7,3,5,6,7,5,6),KK
      GO TO 3
    5 STROPH=STROPH+1
      GO TO 3
    6 ROSTRO=ROSTRO+1
      GO TO 3
    7 STICT=STICT+1
      GO TO 3
C*********************************************************************
C*                                                                   *
C*       REPLACING THE IDENTIFICATION NUMBER WITH AN                 *
C*       ASTERISK TO INDICATE WHERE THE ORGANISM SETTLED              *
```

```
C*                                                                    *
C**********************************************************************
      2 KK=14
      3 LINE(J)=CHAR(KK)
      4 WRITE(6,1000) LINE
 1000 FORMAT (1H ,16X,100A1)
C**********************************************************************
C*                                                                    *
C*       PRINTING THE TOTAL NUMBER OF CELLS IN THE LEVEL              *
C*       WHICH ARE FILLED BY EACH SPECIES                             *
C*                                                                    *
C**********************************************************************
       WRITE (6,2000) STROPH,POSTRO,STICT
 2000 FORMAT (1H ,0,10X,'STROPHOMENA FILLED CELLS: ',I5/1H ,
     1'POSTRICELLULA FILLED CELLS: ',I5/1H ,10X,'STICTOPORA '
     2,'FILLED CELLS: ',I5)
       RETURN
       END
       BLOCK DATA
       IMPLICIT INTEGER*2 (A-Z)
       COMMON/BLOCK1/ICOORD,JCOORD,KCOORD,DIR
       INTEGER*2 ICOORD/0/,KCOORD/0/,JCOORD/0/,DIR/0/
       COMMON/BLOCK2/HIGHSV(20),LOWSV(20),LIFOST(20),
     1SPECSV(20)
       DATA HIGHSV/20*0/,LIFOST/20*0/,LOWSV/13,112,212,312,
     1412,512,612,712,812,912,1012,1112,1212,1312,1412,1512,
     21612,1712,1812,1912/
     2,SPECSV/20*0/
       COMMON/BLOCK 3/ SUBSTR(100,100,16)
       DATA SUBSTR/10000*12,150000*0/
       COMMON/BLOCK 4/DEAD(3)
       DATA DEAD/3*0/
       COMMON/BLOCK5/STOMXI(5,5,2,2,2),STOMXJ(5,5,2,2,2)
         DATA STOMXI/1,4*0,3,4*0,5,4*0,6,6,3*0,6,6,7,2*0,
     11,4*0,3,4*0,5,4*0,6,6,3*0,6,6,7,2*0,
     21,4*0,4,4*0,6,4*0,6,7,3*0,5,7,10,2*0,
     31,4*0,4,4*0,6,4*0,6,7,3*0,5,7,10,2*0,
     42,4*0,0,1,1,2*0,0,2,2,3,0,2,3,3,3,3,5*0,
     55*0,1,4*0,2,2,2,2*0,3,3,3,3,0,5*0,
     61,4*0,0,1,1,2*0,0,1,2,4,0,1,2,3,3,4,5*0,
     75*0,1,4*0,2,2,2,2*0,2,2,2,2,0,5*0/
         DATA STOMXJ/2,4*0,6,4*0,10,4*0,12,12,3*0,12,12,14,
     12*0,2,4*0,6,4*0,10,4*0,12,12,3*0,12,12,14,2*0,
     22,4*0,8,4*0,12,4*0,12,14,3*0,10,14,20,2*0,
     32,4*0,8,4*0,12,4*0,12,14,3*0,10,14,20,2*0,
     44,4*0,0,2,2,2*0,0,4,4,6,0,4,6,6,6,6,5*0,
     55*0,2,4*0,4,4,4,2*0,6,6,6,6,0,5*0,
     62,4*0,0,2,2,2*0,0,2,4,8,0,2,4,6,6,8,5*0,
     75*0,2,4*0,4,4,4,2*0,4,4,4,4,0,5*0/
       COMMON/BLOCK6/BIOSTO(6046)
         DIMENSION STR01(9),STR02(49),STR03(121),STR04(169),
```

```
1STR05(169),STR06(169),STR07(169),STR08(225),STR09(9),
2STR10(81),STR11(169),STR12(169),STR13(225),STR14(121),
3STR15(225),STR16(441),STR17(9),STR18(49),STR19(121),
4STR20(169),STR21(169),STR22(169),STR23(169),
5STR24(225),STR25(9),STR26(81),STR27(169),STR28(169),
6STR29(225),STR30(121),STR31(225),STR32(441)
   DIMENSION ROS01(9),ROS02(25),ROS03(25),ROS04(49),
1ROS05(25),ROS06(49),ROS07(49),ROS08(49),ROS09(49),
2ROS10(9),ROS11(9),ROS12(25),ROS13(81),ROS14(9),
3ROS15(25),ROS16(49),ROS17(49),ROS18(81),ROS19(9),
4ROS20(25),ROS21(25),ROS22(49),ROS23(49),ROS24(49),
5ROS25(9),ROS26(25),ROS27(25),ROS28(25),ROS29(25),
6ROS30(25)
 EQUIVALENCE(BIOSTO(1),STR01(1)),(BIOSTO(10),STR02(1)),
1(BIOSTO(59),STR03(1)),(BIOSTO(180),STR04(1)),
2(BIOSTO(349),STR05(1)),(BIOSTO(518),STR06(1)),
3(BIOSTO(687),STR07(1)),(BIOSTO(856),STR08(1)),
4(BIOSTO(1081),STR09(1)),(BIOSTO(1090),STR10(1)),
5(BIOSTO(1171),STR11(1)),(BIOSTO(1340),STR12(1)),
6(BIOSTO(1509),STR13(1)),(BIOSTO(1734),STR14(1)),
7(BIOSTO(1855),STR15(1)),(BIOSTO(2080),STR16(1))
   EQUIVALENCE (BIOSTO(2521),STR17(1)),
1(BIOSTO(2530),STR18(1)),(BIOSTO(2579),STR19(1)),
2(BIOSTO(2700),STR20(1)),(BIOSTO(2869),STR21(1)),
3(BIOSTO(3038),STR22(1)),(BIOSTO(3207),STR23(1)),
4(BIOSTO(3376),STR24(1)),(BIOSTO(3601),STR25(1)),
5(BIOSTO(3610),STR26(1)),(BIOSTO(3691),STR27(1)),
6(BIOSTO(3860),STR28(1)),(BIOSTO(4029),STR29(1)),
7(BIOSTO(4254),STR30(1)),(BIOSTO(4375),STR31(1)),
8(BIOSTO(4600),STR32(1))
   EQUIVALENCE (BIOSTO(5041),ROS01(1)),
1(BIOSTO(5050),ROS02(1)),(BIOSTO(5075),ROS03(1)),
2(BIOSTO(5100),ROS04(1)),(BIOSTO(5149),ROS05(1)),
3(BIOSTO(5174),ROS06(1)),(BIOSTO(5223),ROS07(1)),
4(BIOSTO(5272),ROS08(1)),(BIOSTO(5321),ROS09(1)),
5(BIOSTO(5370),ROS10(1)),(BIOSTO(5379),ROS11(1)),
6(BIOSTO(5388),ROS12(1)),(BIOSTO(5413),ROS13(1)),
7(BIOSTO(5494),ROS14(1)),(BIOSTO(5503),ROS15(1)),
6(BIOSTO(5528),ROS16(1)),(BIOSTO(5577),ROS17(1)),
7(BIOSTO(5626),ROS18(1)),(BIOSTO(5707),ROS19(1))
   EQUIVALENCE (BIOSTO(5716),ROS20(1)),
1(BIOSTO(5741),ROS21(1)),(BIOSTO(5766),ROS22(1)),
2(BIOSTO(5815),ROS23(1)),(BIOSTO(5864),ROS24(1)),
3(BIOSTO(5913),ROS25(1)),(BIOSTO(5922),ROS26(1)),
4(BIOSTO(5947),ROS27(1)),(BIOSTO(5972),ROS28(1)),
5(BIOSTO(5997),ROS29(1)),(BIOSTO(6022),ROS30(1))
   DATA STR01/1,8,C,1,8,0,3*0/
   DATA STR02/3*0,2*4,2*0,3*1,8,4,2*0,4*1,3*0,4*1,
13*0,4*1,3*0,3*1,8,4,2*0,3*0,2*4,2*0/
   DATA STR03/6*C,2*4,3*0,6*1,8,2*4,2*0,
17*1,8,4,2*0,8*1,3*0,8*1,3*0,8*1,3*0,8*1,3*0),
```

```
2,7*0,1,8,4,2*0,6*1,8,2*4,2*0,6*0,2*4,3*0,11*0/
   DATA STR04/7*1,8,5*0,8*1,8,4*0,9*1,4*0,
19*1,4*0,9*1,4*0,*0,9*1,4*0,9*1,4*0,9*1,4*0,
28*1,8,4*0,7*1,8,5*0,26*0/
   DATA STR05/8*1,8,3*4,1*0,9*1,8,2*4,1*0,1,
16*0,8,2*1,2*4,0,1,7*0,8,1,2*0,6*1,8,2*0,
21,3*0,7*1,2*0,1,3*0,7*1,2*0,1,3*0,7*1,2*0,
31,3*0,6*1,8,2*0,1,3*0,1,7*0,8,1,3*0,1,
46*0,8,2*1,2*4,1*0,9*1,8,2*4,1*0,8*1,8,3*4,1*0/
   DATA STR06/13*0,3*0,6*1,8,3*0,3*0,7*1,
18,2*0,3*0,8*1,2*0,3*0,8*1,2*0,3*0,8*1,2*0,
23*0,8*1,2*0,3*0,8*1,2*0,3*0,28*1,2*0,3*0,
37*1,8,2*0,3*0,6*1,8,3*0,13*0,13*0/
   DATA STR07/8*1,8,4*0,9*1,8,3*0,10*1,8,2*0,11*1,2*0,
111*1,2*0,11*1,2*0,11*1,2*0,11*1,2*0,11*1,2*0,11*1,2*0,
210*1,8,2*0,9*1,8,3*0,8*1,8,4*0/
   DATA STR08/9*1,8,3*4,2*0,10*1,8,2*4,2*0,1,
16*0,8,3*1,8,4,2*0,1,7*0,8,3*1,3*0,1,8*0,
28,2*1,3*0,6*1,8,3*0,2*1,3*0,7*1,3*0,2*1,3*0,7*1,3*0,
32*1,3*0,7*1,3*0,2*1,3*0,6*1,8,3*0,2*1,3*0,1,8*0,8,2*1,
43*0,1,7*0,8,3*1,3*0,1,6*0,8,3*1,8,4,2*0,10*1,8,2*4,
52*0,9*1,8,3*4,2*0/
   DATA STR09/3*0,2*8,0,8,1,0/
   DATA STR10/2*0,2*8,5*0,0,8,2*1,8,4*0,8,4*1,4,3*0,8,
13*1,8,4,3*0,0,8,1,8,5*0,2*0,2*4,5*0,27*0/
   DATA STR11/5*0,2*8,6*0,4*0,8,2*1,8,5*0,3*0,8,4*1,8,
14*0,2*0,8,6*1,8,3*0,0,8,8*1,4,2*0,8,9*1,2*4,0,8,9*1,
22*4,0,0,8,7*1,8,3*0,2*0,8,5*1,8,4*0,3*0,8,3*1,8,5*0,
34*0,3*4,6*0,5*0,2*4,6*0,13*0/
   DATA STR12/7*0,2*8,4*0,6*0,8,2*1,8,3*0,5*0,8,4*1,8,
12*0,4*0,8,6*1,8,0,3*0,8,8*1,8,2*0,8,10*1,0,8,11*1,8,
212*1,8,11*1,8,0,8,9*1,8,0,2*0,8,7*1,8,2*0,3*0,8,5*1,8,
33*0,4*0,8,3*1,8,4*0/
   DATA STR13/8*0,2*8,5*0,7*0,8,2*1,8,4*0,6*0,8,4*1,8,
13*0,5*0,8,
16*1,8,2*0,4*0,8,2*1,8,0,8,3*1,8,0,3*0,8,3*1,8,2*0,8,
23*1,0,2*0,8,5*1,8,2*0,8,2*1,4,0,8,2*1,2*8,3*1,8,2*0,
32*1,4,8,3*1,2*0,8,2*1,8,2*0,2*1,4,8,3*1,8,2*0,2*8,2*0,
48,1,8,0,0,8,3*1,8,4*0,8,1,8,2*0,2*0,8,3*1,8,2*0,8,1,8,
53*0,3*0,8,6*1,8,4*0,4*0,8,4*1,8,5*0,6*0,3*4,6*0/
   DATA STR14/6*0,2*8,3*0,5*0,8,2*1,8,2*0,4*0,8,4*1,8,
10,3*0,8,6*1,8,2*0,8,8*1,0,8,9*1,8,9*1,8,8,9*1,8,0,8,
27*1,8,0,2*0,8,5*1,8,2*0,3*0,8,3*1,8,3*0/
   DATA STR15/8*0,2*8,5*0,7*0,8,2*1,8,4*0,6*0,8,4*1,8,
13*0,5*0,8,6*1,8,2*0,4*0,8,8*1,8,0,3*0,8,10*1,8,2*0,8,
212*1,0,8,13*1,8,14*1,8,14*1,0,8,12*1,8,2*0,8,10*1,8,0,
33*0,8,8*1,8,6*0,8,6*1,8,3*0,5*0,8,4*1,8,4*0/
  DATA STR16/10*0,2*8,18*0,8,2*1,8,8*0,8*0,8,4*1,8,7*,
10,7*0,8,1,2*8,3*1,8,6*0,6*0,8,1,8,2*0,8,3*1,8,5*0,5*0,
28,2*1,8,3*0,8,3*1,8,4*0,4*0,8,4*1,8,3*0,8,3*1,2*4,2*0,
33*0,8,6*1,8,3*0,3*1,3*4,0,2*0,8,1,2*8,5*1,3*0,3*1,3*4,
```

```
40,0,8,1,8,2*0,8,3*1,8,3*0,3*1,4,3*0,8,2*1,8,3*0,8,1,8,
53*0,8,2*1,8,4*0,8,3*1,8,7*0,8,2*1,8,5*0,0,8,3*1,8,5*0,
68,2*1,8,6*0,2*0,8,3*1,8,3*0,8,2*1,8,7*0,3*0,8,8*1,8,
78,8*0,4*0,8,6*1,8,9*0,5*0,8,4*1,8,10*0,6*0,4*4,11*0,
86*0,3*4,12*0,7*0,2*4,12*0,21*0/
   DATA STR17/5,10,0,5,10,0,3*0/
   DATA STR18/3*0,2*4,2*0,3*5,10,4,2*0,4*5,3*0,4*5,3*0,
14*5,3*0,3*5,10,4,2*0,3*0,2*4,2*0/
   DATA STR19/6*0,2*4,3*0,6*5,10,2*4,2*0,7*5,10,4,2*0,
18*5,3*0,8*5,3*0,8*5,3*0,8*5,3*0,7*5,10,4,2*0,6*5,10,
22*4,2*0,6*0,2*4,3*0,11*0/
   DATA STR20/7*5,10,5*0,8*5,10,4*0,9*5,4*0,9*5,4*0,
19*5,4*0,9*5,4*0,9*5,4*0,9*5,4*0,9*5,4*0,8*5,10,4*0,
27*5,10,5*0,26*0/
   DATA STR21/8*5,10,3*4,1*0,9*5,10,2*4,1*0,5,6*0,10,
12*5,2*4,0,5,7*0,8,5,3*0,6*5,10,2*0,5,3*0,7*5,2*0,5,
23*0,7*5,2*0,5,3*0,7*5,2*0,5,3*0,6*5,10,2*0,5,3*0,5,
37*0,10,5,3*0,5,6*0,10,2*5,2*4,1*0,9*5,10,2*4,1*0,8*5,
410,3*4,1*0/
   DATA STR22/13*0,3*0,6*5,10,3*0,3*0,7*5,10,2*0,3*0,
18*5,2*0,3*0,8*5,2*0,3*0,8*5,2*0,3*0,8*5,2*0,3*0,8*5,
22*0,3*0,8*5,2*0,3*0,7*5,10,2*0,3*0,6*5,10,3*0,13*0,
313*0/
 DATA STR23/8*5,10,4*0,9*5,10,3*0,10*5,10,2*0,11*5,2*0,
111*5,2*0,11*5,2*0,11*5,2*0,11*5,2*0,11*5,2*0,11*5,2*0,
210*5,10,2*0,9*5,10,3*0,8*5,10,4*0/
   DATA STR24/9*5,10,3*4,2*0,10*5,10,2*4,2*0,5,6*0,10,
13*5,10,4,2*0,5,7*0,10,3*5,3*0,5,8*0,10,2*5,3*0,6*5,10,
23*0,2*5,3*0,7*5,3*0,2*5,3*0,7*5,3*0,2*5,3*0,7*5,3*0,
32*5,3*0,6*5,10,3*0,2*5,3*0,5,8*0,10,2*5,3*0,5,7*0,10,
43*5,3*0,5,6*0,10,3*5,10,4,2*0,10*5,10,2*4,2*0,9*5,10,
53*4,2*0/
   DATA STR25/3*0,2*10,0,10,5,0/
   DATA STR26/2*0,2*10,5*0,0,10,2*5,10,4*0,10,4*5,4,
13*0,10,3*5,10,4,3*0,0,10,5,10,5*0,2*0,2*4,5*0,27*0/
   DATA STR27/5*0,2*10,6*0,4*0,10,2*5,10,5*0,3*0,10,
14*5,10,4*0,2*0,10,6*5,10,3*0,0,10,8*5,4,2*0,10,9*5,
22*4,0,10,9*5,2*4,0,0,10,7*5,10,3*0,2*0,10,5*5,10,4*0,
33*0,10,3*5,10,5*0,4*0,3*4,6*0,5*0,2*4,6*0,13*0/
   DATA STR28/7*0,2*10,4*0,6*0,10,2*5,10,3*0,5*0,10,
14*5,10,2*0,4*0,10,6*5,10,0,3*0,10,8*5,10,2*0,10,10*5,
20,10,11*5,10,12*5,10,11*5,10,0,10,9*5,10,0,2*0,10,7*5,
310,2*0,3*0,10,5*5,10,3*0,4*0,10,3*5,10,4*0/
   DATA STR29/8*0,2*10,5*0,7*0,10,2*5,10,4*0,6*0,10,
14*5,10,3*0,5*0,10,6*5,10,2*0,4*0,10,2*5,8,0,10,3*5,10,
20,3*0,10,3*5,10,2*0,10,3*5,0,2*0,8,5*5,10,2*0,10,2*5,
34,0,10,2*5,2*10,3*5,10,2*0,2*5,4,10,3*5,2*0,10,2*5,10,
42*0,2*5,4,10,3*5,10,2*0,2*10,2*0,10,5,10,0,0,10,3*5,
510,4*0,10,5,10,2*0,2*0,8,3*5,10,2*0,10,5,10,3*0,3*0,
610,6*5,10,4*0,4*0,10,4*5,10,5*0,6*0,3*4,6*0/
```

```
 DATA STR30/6*0,2*10,3*0,5*0,10,2*5,10,2*0,4*0,10,
24*5,10,0,3*0,10,6*5,10,2*0,10,8*5,0,10,9*5,10,10*5,
310,9*5,10,0,10,7*5,10,0,2*0,10,5*5,10,2*0,3*0,10,3*5,
410,3*0/
   DATA STR31/8*0,2*10,5*0,7*0,10,2*5,10,4*0,6*0,10,
14*5,10,3*0,5*0,10,6*5,10,2*0,4*0,10,8*5,10,0,3*0,10,
210*5,10,2*0,10,12*5,0,10,13*5,10,14*5,10,14*5,0,10,
312*5,10,2*0,10,10*5,10,0,3*0,10,8*5,10,6*0,10,6*5,10,
43*0,5*0,10,4*5,10,4*0/
  DATA STR32/10*0,2*10,18*0,10,2*5,10,8*0,8*0,10,4*5,
110,7*0,7*0,10,5,2*10,3*5,10,6*0,6*0,10,5,10,2*0,10,
23*5,10,5*0,5*0,10,2*5,10,3*0,10,3*5,10,4*0,4*0,10,4*5,
310,3*0,10,3*5,2*4,2*0,3*0,10,6*5,10,3*0,3*5,3*4,0,2*0,
410,5,2*10,5*5,3*0,3*5,3*4,0,0,10,5,10,2*0,10,3*5,10,
53*0,3*5,4,3*0,10,2*5,10,3*0,10,5,10,3*0,10,2*5,10,4*0,
610,3*5,10,7*0,10,2*5,10,5*0,0,10,3*5,10,5*0,8,2*5,10,
76*0,2*0,10,3*5,10,3*0,10,2*5,10,7*0,3*0,10,8*5,10,8*0,
84*0,10,6*5,8,9*0,5*0,10,4*5,10,10*0,6*0,4*4,11*0,6*0,
93*4,12*0,7*0,2*4,12*0,21*0/
   DATA ROS01/2,2*0,2,2*0,2,2*0/
   DATA ROS02/5*0,0,9,2,2*0,3*2,2*0,0,9,2,2*0,5*0/
   DATA ROS03/2*0,9,2,0,0,9,2*2,0,0,3*2,0,0,9,2*2,0,
12*0,9,2,0/
   DATA ROS04/4*0,2*4,0,2*0,9,2*2,4,0,2*0,2*2,9,2*0,
12*0,2*2,3*0,2*0,2*2,9,2*0,2*0,9,2*2,4,0,4*0.2*4,0/
   DATA ROS05/5*0,5*0,2,4*0,2,4*0,5*0/
   DATA ROS06/3*0,2*4,2*0,0,9,2,9,4,2*0,9,3*2,3*0,9,
13*2,3*0,0,9,2,9,4,2*0,3*0,2*4,2*0,7*0/
   DATA ROS07/2*0,9,2,9,2*0,0,9,3*2,2*0,9,4*2,2*0,9,
14*2,2*0,0,9,3*2,2*0,2*0,9,2,9,2*0,7*0/
   DATA ROS08/7*0,2*0,9,2*2,2*0,0,9,3*2,2*0,0,9,3*2,
12*0,2*0,9,2*2,2*0,7*0,7*0/
   DATA ROS09/7*0,5*0,2*4,3*0,9,2*2,4,3*0,2*2,2*0,3*0,
12*2,2*0,3*0,9,2*2,4,5*0,2*4/
   DATA ROS10/0,9,0,2*9,0,9,2*0/
   DATA ROS11/2*2,9,2*2,9,2*9,0/
   DATA ROS12/5*0,0,9,2*2,9,0,3*2,9,0,2*2,9,0,0,2*9,
12*0/
   DATA ROS13/ 9*0, 9*0, 9*0,3*0,9,2*2,9,4,0,2*0,9,3*2,
19,4,0,2*0,2*2,9,2*0,4,0,2*0,2*2,5*0,*0,2*9,
25*0,2*0,3*4,4*0/
   DATA ROS14/3*0,0,9,0,2*9,0/
   DATA ROS15/3*2,9,0,4*2,0,3*2,9,0,9,2,9,2*0,5*0/
   DATA ROS16/7*0,4*2,9,2*0,5*2,2*0,4*2,9,2*0,3*2,9,
13*0,9,2,9,4*0,7*0/
   DATA ROS17/7*0,0,3*2,9,2*0,0,4*2,2*0,0,3*2,9,2*0,0,
19,2,9,3*0,7*0,7*0/
   DATA ROS18/9*0,9*0,9*0,9*0,3*0,9,2*2,9,2*0,3*0,2*2,
19,2,4,0,3*0,2,4,0,2*4,0,3*0,9,2,4,3*0,4*0,2*4,3*0/
   DATA ROS19/11,2*6,3*6,11,2*6/
   DATA ROS20/0,11,6,11,0,11,3*6,0,4*6,0,11,3*6,0,0,11,
```

```
16,11,0/
   DATA ROS21/5*0,0,11,2*6,0,0,3*6,0,0,11,2*6,0,5*0/
   DATA ROS22/7*0,2*0,11,6,11,2*0,0,11,3*6,2*0,11,3*6,
13*0,11,3*6,3*0,0,11,3*6,2*0,2*0,11,6,11,2*0/
   DATA ROS23/7*0,7*0,7*0,0,11,3*6,2*0,0,11,3*6,2*0,
17*0,7*0/
   DATA ROS24/7*0,2*0,11,6,11,2*0,0,11,3*6,2*0,7*0,7*0,
10,11,3*6,2*0,2*0,11,6,11,2*0/
   DATA ROS25/2*6,11,2*6,11,2*11,0/
   DATA ROS26/5*0,11,2*6,11,0,4*6,0,3*6,11,0,11,6,11,
12*0/
   DATA ROS27/5*0,5*0,0,2*6,11,0,0,2*6,11,0,0,2*11,2*0/
   DATA ROS28/4*6,11,5*6,2*6,3*11,2*6,11,2*0,11,6,11,
12*0/
   DATAROS29/5*0,0,6,11,2*0,0,11,6,11,0,2*0,2*11,0,5*0/
   DATA ROS30/0,11,2*6,11,11,0,11,2*6,6,11,0,2*11,2*6,
111,2*0,11,6,11,2*0/
 COMMON/BLOCK7/LOLIMI,HILIMI,LOLIMJ,HILIMJ,LOWERI,
1UPPERI,LOWERJ,UPPERJ
 INTEGER*2 LOLIMI/0/,HILIMI/0/,LOLIMJ/0/,HILIMJ/0/,

1LOWERI/0/,UPPERI/0/,LOWERJ/0/,UPPERJ/0/
 COMMON/BLOCK 9/ DIRCTR(5,5,2,2,2)
   DATA DIRCTR/5*0,9,4*0,58,4*0,179,348,3*0,517,686,
1855,2*0,2520,4*0,2529,4*0,2578,4*0,2699,2868,3*0,3037,
23206,3375,2*0,1080,4*0,1089,4*0,1170,4*0,1339,1508,
33*0,1733,1854,2079,2*0,3600,4*0,3609,4*0,3690,4*0,
43859,4028,3*0,4253,4374,4599,2*0,5148,4*0,3,5040,5040,
52*0,3,5049,5074,5099,0,5148,5173,5222,5271,5320,5*0,3,
64*0,5706,4*0,5740,5715,5740,2*0,5814,5765,5765,5863,0,
75*0,5493,4*0,3,5369,5369,2*0,3,5378,5387,5412,0,5493,
85502,5527,5576,5625,5*0,3,4*0,5912,4*0,5946,5921,5946,
92*0,5996,5971,5971,6021,0,5*0/
 COMMON/BLCK 10/ IHOLD(600),JHOLD(600)
 INTEGER*2 IHOLD/600*0/,JHOLD/600*0/
 COMMON/BLCK 11/STOMXK(5,2,2)
   DATA STOMXK/0,0,0,1,2,0,2,3,4,0,0,0,0,1,2,0,0,2,3,0/
 COMMON/BLCK 15/ ISTO(2050),JSTO(2050),KSTO(2050),
1DSTO(2050),LIVLVL(16,3)
 DATA ISTO/2050*0/,JSTO/2050*0/,KSTO/2050*0/,
1DSTO/2050*0/
 INTEGER*2 LIVLVL/42*0/
 COMMON /BLCK 19/ LFTSTI(20),LFTSTJ(20),LFTSTK(20),
1SPSTO(20),LIFCLS(20),DIRSTO(20),ORISTO(20),L
 INTEGER*2 LFTSTI/20*0/,LFTSTJ/20*0/,LFTSTK/20*0/,
1SPSTO/20*0/,LIFCLS/20*0/,DIRSTO/20*0/,ORISTO/20*0/,
2L/0/
 COMMON /BLCK 20/ AGECLS(6,3),LIVING(6,3)
 INTEGER*2 AGECLS/18*0/,LIVING/18*0/
 COMMON /BLCK 21/ PIECES (250)
 DATA PIECES/250*0/
```

```
COMMON /BLCK 24/NSAVE(500),NJSAV(500),NISAV(500)
DATA NSAVE/500*C/,NISAV/500*0/,NJSAV/500*0/
END
```

VITA

Edward Jay Masuoka was born in Nashville, Tennessee, on May 24, 1952. He attended Peabody Demonstration School and graduated from high school in June 1970. The following September he entered Harvard University and in June 1974 he received a Bachelor of Arts degree cum laude. In the fall of 1974 he entered the University of Tennessee and received a Master of Science degree with a major in geology in August 1978.