July 26, 1965

To the Graduate Council:

I am submitting herewith a thesis written by Ernest Earl Herrmann, Jr., entitled "The Effects of Ammonia on Frozen Beef and Pork Musculature." I recommend that it be accepted for nine quarter hours of credit in partial fulfillment of the requirements for the degree of Master of Science, with a major in Food Technology.

Melvin B. Tobin
Major Professor

We have read this thesis and recommend its acceptance:

Robert L. Ingalls

Ivan E. McCarty

Accepted for the Council:

Hilton A. Smith
Dean of the Graduate School

THE EFFECTS OF AMMONIA ON FROZEN BEEF AND PORK MUSCULATURE

A Thesis

Presented to

the Graduate Council of

The University of Tennessee

In Partial Fulfillment

of the Requirements for the Degree

Master of Science

---

by

Ernest Earl Herrmann, Jr.

August 1965

ACKNOWLEDGMENTS

The author wishes to express his sincere appreciation for the valuable guidance and criticism given by Dr. Melvin R. Johnston and Professor Ivon E. McCarty during the development and preparation of this thesis.

Due acknowledgement is made to Dr. Bernadine Meyer, Mrs. Mary Ann Mysinger, and Mrs. Mary Nelle Connelly of the Home Economics Laboratory for conducting the taste panels. Too, acknowledgment is made to the panel members who so conscientiously served on the taste panel.

The author wishes to thank the State of Alabama Department of Public Health, whose financial aid made this study possible; and points out in particular, the encouragement given by Mr. G. R. Wright.

I am extremely grateful to my parents, Mr. and Mrs. E. E. Herrmann, for their encouragement and material aid, and to my wife, Mrs. Earl Herrmann, Jr., whose cooperation and moral support have been of immeasurable value.

623196

TABLE OF CONTENTS

CHAPTER		PAGE
I.	INTRODUCTION	1
II.	REVIEW OF LITERATURE	3
	Effects of Ammonia on Food Products	3
	pH of Meats	5
	Texture of Meats	8
	Color of Meats	11
	Containers and Overwraps	14
III.	MATERIALS AND METHODS	15
	Preparation and Treatment of Samples	15
	Analysis of Samples	20
	Color Analysis	22
	Organoleptic Evaluation	23
	Tenderness Measurements	25
IV.	RESULTS AND DISCUSSION	26
	Penetration Rate of Ammonia in Frozen Beef and Pork Samples	26
	pH of Beef and Pork Samples	31
	Color Analysis	39
	Organoleptic Evaluation of Beef Samples	54
	Shear Evaluation	62
V.	SUMMARY	66

CHAPTER PAGE

BIBLIOGRAPHY 67

APPENDIX 72

CRANES CREST

LIST OF TABLES

TABLE PAGE

I. Average Gram Equivalents of Ammonia Absorbed Per One Gram of Beef Per 1/4-Inch Layer At -20°F. 27

II. Average Gram Equivalents of Ammonia Absorbed Per One Gram of Beef Per 1/4-Inch Layer At 0°F. 28

III. Average Gram Equivalents of Ammonia Absorbed Per One Gram of Beef Per 1/4-Inch Layer At +15°F. 29

IV. Analysis of Variance on the Summary of Tables I, II, and III 30

V. Average Gram Equivalents of Ammonia Absorbed Per One Gram of Pork Per 1/4-Inch Layer At -20°F. 32

VI. Average Gram Equivalents of Ammonia Absorbed Per One Gram of Pork Per 1/4-Inch Layer At 0°F. 33

VII. Average Gram Equivalents of Ammonia Absorbed Per One Gram of Pork Per 1/4-Inch Layer At +15°F. 34

VIII. Analysis of Variance on the Summary of Tables V, VI, and VII 35

TABLE		PAGE
IX.	pH of Beef Per 1/4-Inch Layer At -20°F.	36
X.	pH of Beef Per 1/4-Inch Layer At 0°F.	37
XI.	pH of Beef Per 1/4-Inch Layer At +15°F.	38
XII.	Analysis of Variance on the Summary of Tables IX, X, and XI	40
XIII.	pH of Pork Per 1/4-Inch Layer at -20°F.	41
XIV.	pH of Pork Per 1/4-Inch Layer at 0°F.	42
XV.	pH of Pork Per 1/4-Inch Layer at +15°F.	43
XVI.	Analysis of Variance on the Summary of Tables XIII, XIV, and XV	44
XVII.	Summation of Hunter "L", "a", and "b" Values of Beef Samples at -20°F.	45
XVIII.	Summation of Hunter "L", "a", and "b" Values of Beef Samples at 0°F.	46
XIX.	Summation of Hunter "L", "a", and "b" Values of Beef Samples at +15°F.	47
XX.	Analysis of Variance on the Summary of Tables XVII, XVIII, and XIX	49
XXI.	Summation of Hunter "L", "a", and "b" Values for Pork Samples at -20°F.	50
XXII.	Summation of Hunter "L", "a", and "b" Values for Pork Samples at 0°F.	51

TABLE		PAGE
XXIII.	Summation of Hunter "L", "a", and "b" Values for Pork Samples at +15°F.	52
XXIV.	Analysis of Variance on the Summary of Tables XXI, XXII, and XXIII	53
XXV.	Organoleptic Evaluation of Beef Samples for Odor At -20°F.	55
XXVI.	Organoleptic Evaluation of Beef Samples for Odor at 0°F.	56
XXVII.	Organoleptic Evaluation of Beef Samples for Odor At +15°F.	57
XXVIII.	Analysis of Variance on the Summary of Tables XXV, XXVI, and XXVII	58
XXIX.	Organoleptic Evaluation of Beef Samples for Flavor at -20°F.	59
XXX.	Organoleptic Evaluation of Beef Samples for Flavor at 0°F.	60
XXXI.	Organoleptic Evaluation of Beef Samples for Flavor at +15°F.	61
XXXII.	Analysis of Variance on the Summary of Tables XXIX, XXX, and XXXI	63
XXXIII.	Average Shear Values of Beef Cores in Pounds	64
XXXIV.	Warner-Bratzler Shear Test for Beef Round Roast at -20°F.	73

TABLE PAGE

XXXV. Warner-Bratzler Shear Test for Beef Round Roast at 0°F. 74

XXXVI. Warner-Bratzler Shear Test for Beef Round Roast at +15°F. 75

XXXVII. Hunter "L", "a", and "b" Values of Beef Samples at -20°F. 76

XXXVIII. Hunter "L", "a", and "b" Values of Beef Samples at 0°F. 77

XXXIX. Hunter "L", "a", and "b" Values of Beef Samples at +15°F. 78

XXXX. Hunter "L", "a", and "b" Values of Pork Samples at -20°F. 79

XXXXI. Hunter "L", "a", and "b" Values of Pork Samples at 0°F. 80

XXXXII. Hunter "L", "a", and "b" Values of Pork Samples at +15°F. 81

CHAPTER I

INTRODUCTION

Anhydrous ammonia is probably used by more commercial freezer and cold storage companies than any other refrigerant. Nevertheless, when leaks or breaks occur in the ammonia lines, the food products in the storage chambers are adversely affected. According to Duren (10)* such an incident occurred in a 0°F freezer in 1962; the foods in the freezer were rendered unfit for human consumption due to their exposure to ammonia. Likewise Phillips (24) pointed out that ammonia has a baneful effect on the pH, color, appearance, odor, flavor, and texture of foods. Kassem (20) reported that a liquid ammonia line broke in a commercial cold storage plant exposing various food products to ammonia. Again ammonia displayed a pernicious effect on the pH, color, appearance, and texture of the stored food products.

With the foregoing factors in mind and considering the external and inherent variables affecting the color,

---

*The numbers in parentheses represent similarly numbered references in the Bibliography.

pH, appearance, and texture of meat, ante- and post-mortem, this study was made in an attempt to (1) establish the penetration rate of ammonia in exposed beef and pork musculature over a 24-hour period, (2) to determine the effect of ammonia on the color of these two meats, and (3) to ascertain the effect of ammonia on the odor and flavor of beef.

CHAPTER II

REVIEW OF LITERATURE

I. EFFECTS OF AMMONIA ON FOOD PRODUCTS

A review of literature indicates that very little work has been done with ammonia and its effects on food products. Brennan, Leone, and Daines (5) found that peaches and certain varieties of apples exposed to ammonia fumes at two different levels show undesirable effects. Peaches were much more susceptable to ammonia injury than apples. After a 2-hour exposure, the peaches were severely damaged whereas apples were only moderately injured. A purple or black color developed in the apples whereas in peaches a brownish-black color prevailed. However, it was noted that the absorbed ammonia, at both levels, in peaches and apples lasted but a few days. Desrosier (9) stated that foods exposed to ammonia first appear brown to greenish-black on the outer surfaces and that severe injury is noted by more discoloration and softening of the tissue. Duren (10) pointed out that strawberries, green beans, peaches, cherries,

green peas, beets, blueberries, apple sauce, squash, brussel sprouts, and corn exposed to ammonia developed an abnormal appearance. When exposed to ammonia the color of the products became darker, the pH increased one or two units above the normal or control; however, no odor was detected in any of the products. Phillips (24) compared the effect of ammonia on the pH, color, appearance, odor, flavor, and texture of five foods (green beans, beef patties, strawberries, meat pot pie, and fish sticks) using two concentrations of ammonia. In both treatments the food products were adversely affected by the ammonia. The pH of the samples increased, color reflectance decreased, product appearance became unacceptable, the odor was of ammonia, a very poor flavor was noted, and texture of food products was lowered considerably. According to Kassem (20), foods (green beans, grean peas, fish sticks, and ground beef) treated with ammonia showed slight buffering effect when titrated against an acid solution and their pH values were not directly proportional to the amount of acid added. Untreated foods showed a buffer effect when titrated against an alkaline solution and their pH values were not directly proportional to the amount of alkali added. He also stated that (1) the physical properties

of the foods treated were adversely affected, (2) an organoleptic panel downgraded all foods exposed (with the exception of green bean color), and (3) that cryovac overwrap was most impermeable to ammonia while wax paper was the most permeable.

II. pH OF MEATS

Hall, Latschar, and Mackintosh (12) concluded that the lactic acid content in beef is important and this may be a contributing factor to the difference between dark and bright beef. Dark beef had abnormally high pH, low glucose, practically no glycogen, high inorganic phosphate, low oxidation potential, and rapid oxygen uptake. The beef tissue had a sticky, gummy texture. Hedrick and co-workers (14,15,16,17) have shown that dark cutting beef is caused by excitement, fatigue, and exposure. These factors cause production of adrenaline, thereby stimulating enzymes in the liver and muscle to break down glycogen to a more simple sugar such as glucose. If the amount of glycogen is low at the time of slaughter, the amount of lactic acid produced post-mortem will be less. Subsequently, the pH of the muscle

will be higher because of low acid content and a dark-cutter results. Sayre, Briskey, and Hoekstra (25) found that short-term excitement and exercise immediately prior to slaughter caused a rapid post-mortem glycolysis, indicated by a rapid pH decline and decrease of color intensity in the muscle. The rapid glycolysis resulted in meat with inferior water-binding properties and low color and texture scores. Long and short term sucrose feeding elevated the glycogen level of the muscle at slaughter which ultimately resulted in a muscle that was slightly soft and pale. Fasting 70 hours prior to slaughter lowered the initial glycogen content of the muscle and also slowed pH decline and color change during post-mortem glycolysis.

Wismer-Pedersen and Briskey (30) have shown that soft, exudative tissue resulted when the pH was decreased to about 5.4 while tissue temperature remained above 25°C. Chilling the tissue rapidly prevented extreme pH variations and muscle structure alterations. Rapidly chilling carcasses by submersion did not give the same degree of improvement, but substantially retarded pH decrease immediately post-mortem.

Hamm and Deatherage (13) suggested that heating meat

at different pH values produced an increase in buffer power at high pH values and a decrease at low pH values. They also found the higher buffering power of meat was not due to the release of buffering protein bound phosphoric acid compounds, but to a change in the muscle proteins. Meat with low pH values exhibited upon heating a lower decline in hydration than meat with higher pH values.

Kauffman, Carpenter, Bray, and Hockston (21) pointed out that increased acidity in pork muscle was associated with pale, soft tissue which yielded higher percentages of expressible juice. There was a positive relationship between the pH values of different muscles within each carcass at any stage of comparison. The pH of chilled muscle was associated with the pH of aged and cooked muscle. Muscles with relatively high pH that were dark, dry, and firm shrank less during curing, and upon cooking were more juicy and tender than pale, soft, watery muscle of low pH. The curing process raised all palatability ratings to a comparable and acceptable level regardless of muscle acidity. It was postulated that pork muscle with a higher pH in hams has less shrinkage during processing.

III. TEXTURE OF MEATS

Bratzler (3) commented that the Warner-Bratzler shear measures the amount of force necessary to shear through a sample of meat of a given diameter, usually a one-inch cylindrical core. The standardized machine has a shearing blade of 0.040 inches thick. The cutting or shearing edge of the opening is rounded or dulled to the radius of a circle of 0.2 inches. Most of the machines are motor driven with a shearing speed of 9 inches per minute. The amount of force necessary to shear a sample is indicated on a dead hand spring dyanometer in pounds. He also pointed out that highly significant correlations between Warner-Bratzler shear and taste panels were obtained from cooked and raw meats when treated alike. Hostetler and Ritchey (18) stated that comparisons of subjective and objective measurements are difficult because of variation in scoring procedures and in the abilities of judges to distinguish differences between samples; and too, the techniques used in determining tenderness differ among laboratories. It was also pointed out that the two sources of variation between investigators using the Warner-Bratzler shearing device are size of the

core and the method used in obtaining the core to be sheared. In relation to shear force, values Goll, Henderson, and Kline (11) showedthat shear force values obtained by using the Warner-Bratzler shear test immediately after death varied substantially among test animals. Results indicate that the semitendinosus muscles left attached to the skeleton were least tender immediately post-mortem and became progressively more tender with post-mortem aging. With one exception, muscles sampled immediately post-mortem had pH values above 6.00. Muscles left in the carcass until appropriate time post-mortem showed pH ranging from 5.35 to 6.22. Alsmeyer, Thornton, and Hiner (1) studied tenderness cross-sectional variations in pork loin roasts by panel, Warner-Bratzler shear, and the "slice tenderness evaluator". The correlation coefficients between the panel score and STE shear values were higher than corresponding correlations with STE puncture. Too, at all locations the STE values were more related to the panel score than to the Warner-Bratzler shear value. This suggests that STE and Warner-Bratzler measure different rheological properties of meat. Since the average STE value displayed closer relations with the panel scores, it appears

that no single location can be effectively evaluated for tenderness, but rather the entire muscle cross section should be measured to obtain the most reliable tenderness estimates.

Sharrah, Kunze, and Pangborn (26) reported, that in general, round roasts from Hereford straightbred were higher in all quality factors than the roasts from Angus, Charbray, or from their crosses. These results were obtained by using a sensory panel and the Warner-Bratzler shear and the L.E.E. Kramer shear apparatus modified by an attachment of a Warner-Bratzler shearing plate. It was shown in these tests that sensory tenderness correlated more highly with the Warner-Bratzler shear than with the L.E.E. Kramer-Warner-Bratzler shear values. Sharrah et al. (27) used the Warner-Bratzler, a conventional L.E.E. Kramer and a modified L.E.E. Kramer containing a Warner-Bratzler shear plate attachment to objectively measure the tenderness of beef. Tenderness, texture, juiciness, flavor, and chew counts on slices and tenderness on cores from three positions of the muscle were evaluated by a highly trained taste panel. From these measurements the following conclusions were made:

(1) mechanical devices differ in sensitivity and reproducibility and appear to measure different properties of meat, (2) variation may exist within the same muscle, (3) judges vary considerably in sensitivity and reproducibility and tend to give relative judgments within a set of variables, and (4) use of only the correlation coefficient in relating subjective and objective measurements may be insufficient. Bratzler and Smith (4) found that the press and shear methods used on cooked meat gave comparable relationships with sensory panel scores; however, when raw samples were tested by the press very little correlation could be made with the panel scores of the cooked meat. When testing beef muscles, Burrill, Deethardt, and Saffle (7) observed that correlation coefficients between taste panel scores and Warner-Bratzler shear and between panel scores and Kramer maximum force was not significantly different, although the relationship was higher for the Warner-Bratzler than for the Kramer shear.

IV. COLOR OF MEATS

Butler (8) noted that during the period of increasing formation of metmyoglobin there was a high correlation between the index of fading calculated from Munsell hue,

value, and chroma determined by disk colorimetry and the per cent metmyoglobin determined spectrophotometrically. He also found that color of freshly cut beef was not significantly correlated with per cent metmyoglobin and that a desirable color was maintained longer at 34°F. than at 40°F. in a self-service case. Too, a temperature of 32°F. in a cooler was more effective than a rack level temperature of 34°F. in the self-service case. Using the Hunter Color and Color Difference Meter, Jacobson and Fenton (19) found that hue was attributed to the level of nutrition significant for the semimembranosus and that hue of both raw and and roasted beef from cattle 32 to 80 weeks of age was also significant. The pH of the carcasses varied very little after seven days of aging and color variation could not be explained on the basis of pH. Tauber and Simon (28) analyzed commercial frankfurters with the Cary model 14 spectrophotometer and Hornsey's method of determining pigment and found them to vary in total meat pigment content.

Townsend and Bratzler (29) reported that temperature variations in a self-service frozen food case affected the appearance of frozen meat packaged in transparent oxygen impermeable wrapping materials. Pre-freezing conditions

affects the initial color degradation of packaged meat prior to freezing. Likewise, oxygen impermeable wrapper has a marked effect on frozen meat color. Samples stored under fluorescent light at 0°F. showed less discoloration and metmyoglobin formation than samples stored in darkness in a self-service case in which there was considerable temperature fluctuation. Wave lengths of light between 560 and 630 mu. (yellow orange) seem to be responsible for color degradation of packaged frozen meat. There seems to be a relatively high relationship between the index of fading and per cent metmyoglobin. Oxidation rates of highly purified and crude beef oxymyoglobin solutions were measured at 0°, 5°, 15°, and 18°C. Brown and Dolev (6) showed that oxidation rate decreased with lower temperatures until solutions actually solidified; at that time the auto-oxidation rate increased sharply. All myoglobin solutions oxidized more slowly at -5° than at 0°C., and at -5°C. none of the solutions were frozen. However, at -10°C. the solutions froze and the rates of oxidation increased sharply. It was shown that as the temperature was further decreased the rate of oxidation continued to increase.

V. CONTAINERS AND OVERWRAPS

Because containers and overwraps can affect the color, odor, and flavor of food products they must be scrutinized with deliberation as to the product to be packaged. Beardsell (2) indicated that most of the containers now used for frozen foods were designed for canned goods and other non-frozen products. Subsequently, most of the containers used for frozen foods fail when they are subjected to (1) substantial changes in temperature, humidity, and vapor pressure in shipment, (2) vibrations of a pummelling nature aboard truck and rail cars, (3) low temperatures and high air velocities prevalent in air blast freezers, (4) condensation resulting from changes in temperature and humidity, and (5) the weight of stacking and uneven length of storage under the foregoing conditions. Phillips (23) pointed out that cellophane, polyethylene, and polyester films are used by themselves and in combinations for packaging products. However, no one film was suited for all products or uses; combinations of these films could not meet the required protection or packaging problems. Therefore, if a packer is to succeed he must choose the type of film which is most compatible with the product he is manufacturing.

CHAPTER III

MATERIALS AND METHODS

I. PREPARATION AND TREATMENT OF SAMPLES

Beef and pork samples were obtained by freezing the full beef round and two fresh pork hams in a -20°F. freezer. After the meats were completely frozen, 2-inch thick slices were removed by cutting transversely to the long axis of the beef round and the hams with a power meat saw. The slices were squared to facilitate the removal of uniform 2 inch cubes from the slices (Figure 1). The 2-inch meat cubes were then wrapped in plastic-coated freezer paper and held at 0°F.

A cylinder of ammonia was stored in a -20°F. freezer to facilitate the removal of ammonia as a liquid. Three Presto Pressure Cookers were modified to serve as treatment chambers (Plate I). A 50-ml. beaker was positioned inside each treatment chamber, the chambers were sealed and stored in the -20°F. freezer. These procedures were instigated to deaccelerate vaporization of ammonia as it was collected in the beakers.

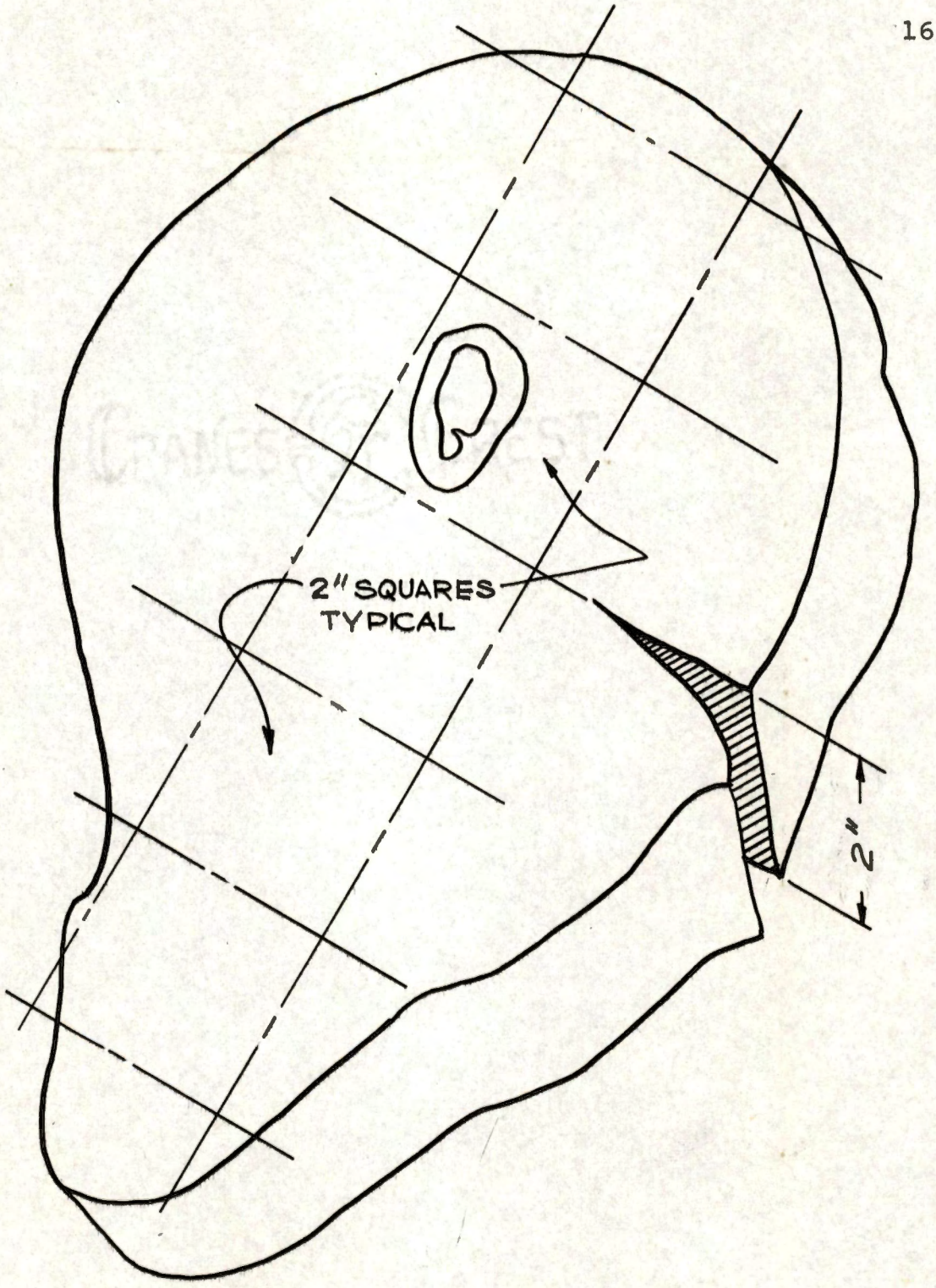

FIGURE 1

REMOVAL OF 2-INCH CUBES



PLATE I

MODIFIED PRESTO PRESSURE COOKER

The chamber lids were removed and 10 milliliters of ammonia in 50-ml. beakers were placed in each of the treatment chambers. The 2-inch cubes of meat were removed from the 0°F. freezer. The freezer paper was removed and three cubes of meat were then placed on chromium racks inside each treatment chamber. In this way all sides of the cubes were exposed to the gaseous ammonia. The three chambers were then sealed and one chamber placed in a -20°F. freezer, one in a 0°F. freezer, and the third chamber placed in a +15°F. freezer. The chambers were held at these temperatures for 24 hours. This procedure was replicated three times for both beef and pork.

At the termination of the 24-hour treatment period, the chambers were removed from the freezers, their lids removed and the meat cubes extracted from them. A 1/2-inch layer was then sliced from four sides of the cube, leaving a 1-inch by 2-inch rectangular sample with two 1-inch by 1-inch exposed ends (Figure 2). Cutting transversely to the long axis of the rectangle, four 1/4-inch thick slices were removed from one-half of the rectangular sample. The four slices represented the exposed surface or first layer, second, third, and fourth layers. By slicing

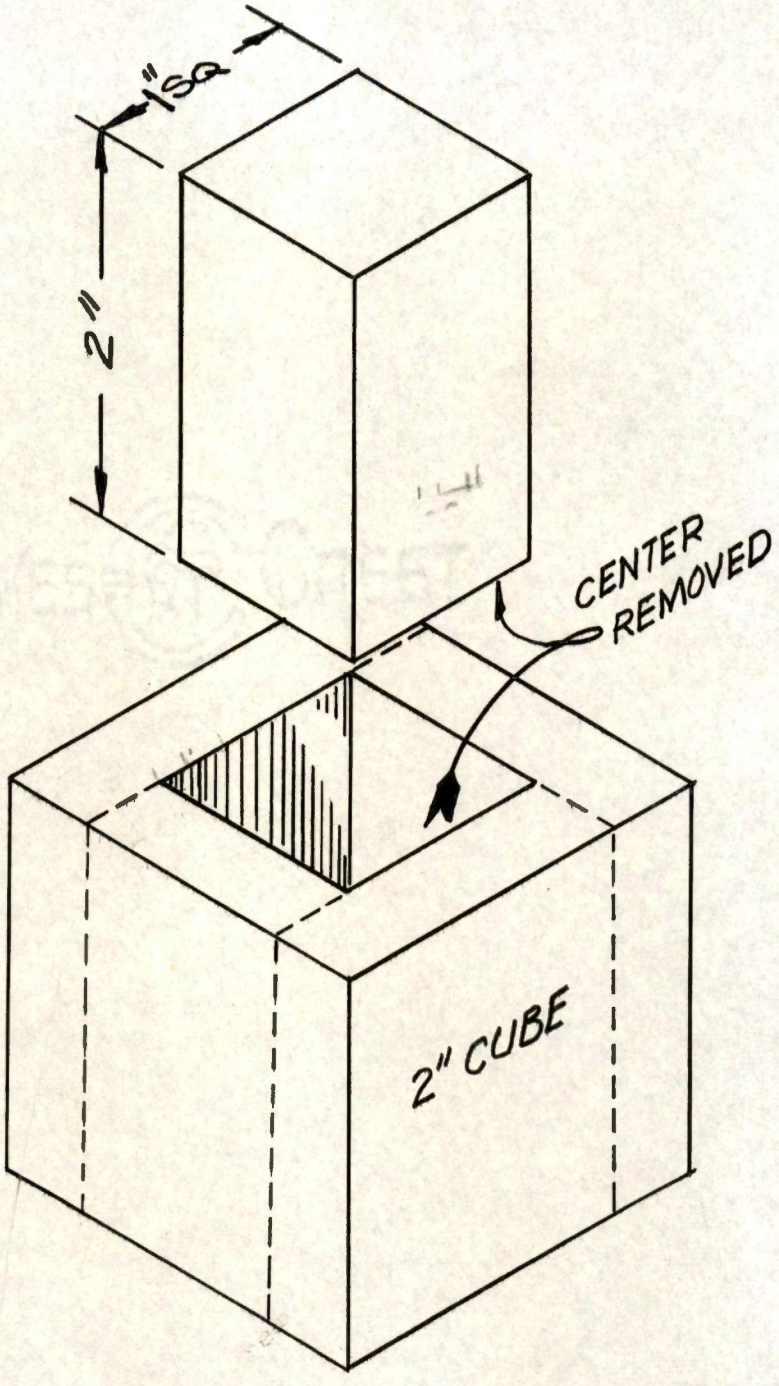

FIGURE 2

REMOVAL OF RECTANGLE FROM CUBE

the samples in this manner the amount of ammonia absorbed per 1/4-inch layer could be determined. The fourth layer approximated the geometric center of the 2-inch cube (Figure 3). This procedure was replicated three times using three 2-inch cubes per treatment. Beef and pork samples were treated independently.

II. ANALYSIS OF SAMPLES

Each 1/4-inch layer was placed in a 4-ounce glass jar, sealed and held at 0°F. As the 1/4-inch layers were removed from the 0°F. freezer they were placed in pint jars containing 100 ml. of distilled water. The jars were sealed with osterizer heads and homogenized for 3 minutes.

The samples were then transferred to 400-ml. beakers. The pint jars were rinsed with 50-ml. of distilled water to remove any adhering suspension. The residue was also emptied into the 400-ml. beakers. The samples were homogenized to prepare a uniform colloidal suspension and they were read on a Beckman Zeromatic pH meter. A 0.1974 N hydrochloric acid solution was used to adjust the pH of the samples to the pH of the control. The pH meter was standarized

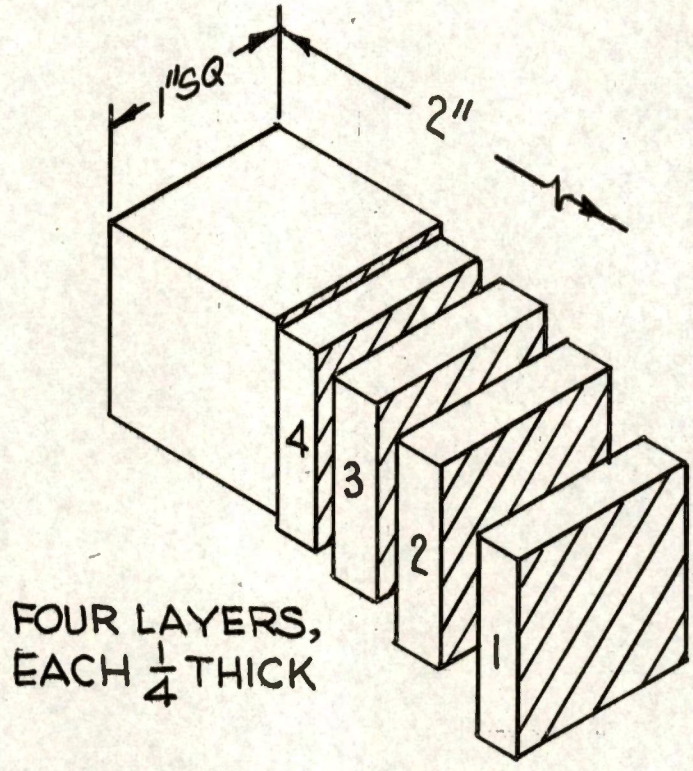

FIGURE 3

SLICING RECTANGLE INTO 1/4-INCH LAYERS

routinely by using a buffer solution of pH 7.

The volume of hydrochloric acid necessary to adjust the pH of the treated sample to the control was recorded in milliliters. The gram equivalents of ammonia absorbed per layer was calculated and recorded. These data were statistically analyzed, using the analysis of variance and Duncan's Multiple Range Test.

III. COLOR ANALYSIS color-eye

The Hunter Color and Color Difference Meter was used to measure the Hunter values "L", "a," and "b" of the exposed and unexposed beef and pork samples. The Hunter Color instrument measures the average diffuse daylight color of a flat opague surface. The search unit was inverted, thereby enabling the samples to be presented to the search unit with the cover glass removed. An opague cover plate with a 1/2-inch aperture was used. The samples were placed on parchment paper, positioned on the "Big Jack" and raised to the 1/2-inch orifice of the search unit.

The Hunter Color Difference Meter was standardized by using plate D25-230. The hitching post technique was

employed in determining color values of the beef and pork samples. Plate D25-232 was used for comparative measurements of the samples.

IV. ORGANOLEPTIC EVALUATION

Beef samples were prepared for a trained, four member taste panel by removing 4-inch by 6-inch log roasts from the frozen full round of a beef. The log roasts were placed in the previously described treatment chambers using the same exposure time, temperature, and volume of ammonia. After treatment, the log roasts were removed from the treatment chambers. One-quarter inch slices were removed from the ends and four sides leaving a log roast 3-1/2 inches by 5-1/2 inches. This procedure was executed because of the organoleptic results reported by Kassem (20) and Phillips (24). The roasts were then sealed in the cryovac bags to prevent the ammonia from dissipating and held at 0°F.

The log roasts were removed from 0°F. storage and thawed at room temperature for 6 hours in the cryovac bags. Thawing was completed overnight in a 38°F. refrigerator. The roasts were then prepared for the taste panel by the

Home Economics laboratory. A rotary hearth oven was pre-heated to 300°F. and the roasts were cooked to an internal temperature of 154.4°F. The roasts were then halved, one-half being used for the taste panel and the other half used for Warner-Bratzler shear determinations. The half used for the taste panel was placed on a cutting board with the oven exposed end up. Four quadrents were marked and a 1-inch core was removed from the center of each quadrent. The cores were sliced transversely to their long axis into 1/4-inch slices and presented to the panel. The 1/4-inch slices were made so the panel would receive the outer--or first--slice, second, third, and fourth--or inner--slice separately on coded dishes. At each of the five sittings the panelist received cuts from the same location of each roast. Each slice was judged by the panel for odor and flavor against a control. The scale used for evaluation was as follows:

Plus 3 - very much better than control

Plus 2 - better than control

Plus 1 - slightly better than control

0 - same as control

Minus 1 - slightly worse than control

Minus 2 - worse than control

Minus 3 - very much worse than control

These procedures were replicated three times.

Results of the organoleptic evaluations were obtained by adding the scores of the taste panel algebraically and calculating the means. The panel data was analyzed statistically, using the analysis of variance and Duncan's Multiple Range Test.

V. TENDERNESS MEASUREMENTS

The remaining one-half of the log roasts were then evaluated for tenderness by using the Warner-Bratzler shear. Six 1/2-inch cores were taken from the long axis of the muscles in the roasts. The resistance afforded by the core to the shear was registered in pounds on a dead hand spring dyanometer. Two shears per core were made, the results were recorded and analyzed statistically. This procedure was replicated three times per treatment.

CHAPTER IV

RESULTS AND DISCUSSION

I. PENETRATION RATE OF AMMONIA IN FROZEN BEEF AND PORK SAMPLES

The penetration rate of ammonia in frozen beef is shown by the Duncan's Multiple Range Test in Tables I through III. These tables indicate that, in general, the gram equivalents of ammonia absorbed in the first or exposed layer of all samples, at all temperatures, were significantly higher than in the remaining three layers. This test also points out that there was no significant difference in the amount of ammonia absorbed between the second, third, and fourth layers. However, by the analysis of variance it was shown that there was a highly significant difference in the amount of ammonia absorbed in layers between replicates.

An analysis of variance of Tables I through III as shown in Table IV indicates that in beef samples there was no significant effect of temperatures in the gram equivalents of ammonia absorbed per replication. Nevertheless, as shown, there was a highly significant difference in the amount

TABLE I

AVERAGE GRAM EQUIVALENTS OF AMMONIA ABSORBED PER ONE GRAM OF BEEF PER 1/4-INCH LAYER AT -20°F.

	Treatment--10 Ml. NH_3 at -20°F. for 24 Hrs.			
Replicates	Layer Three	Layer Four	Layer Two	Layer One
I	0.00	0.00	0.00	13.33
	0.09	0.09	0.15	11.18
	0.10	0.15	0.10	3.87
II	0.06	0.13	0.13	16.07
	0.06	0.06	0.06	12.40
	0.40	0.32	0.55	13.04
III	0.09	0.00	0.05	17.88
	0.03	0.03	0.13	17.13
	0.06	0.11	0.11	11.89
Total	0.89	0.95	1.28	116.79
Mean	0.09	0.10	0.14	12.97
Statistical significance 0.05 level				

Summary of Analysis of Variance

Source	D.F.	M.S.	F. Ratio
Replicate	2	370.75501	110.67**
Layer	3	48.52990	14.49**
R X L	6	48.07338	14.35**
Within Replicates	24	3.35078	
Total	35		

TABLE II

AVERAGE GRAM EQUIVALENTS OF AMMONIA ABSORBED PER ONE GRAM OF BEEF PER 1/4-INCH LAYER AT 0°F.

	Treatment--10 Ml. NH_3 at 0°F. for 24 Hrs.			
Replicates	Layer Four	Layer Three	Layer Two	Layer One
I	0.07	0.07	1.10	8.27
	0.08	0.08	0.08	8.29
	0.01	0.11	0.11	3.60
II	0.07	0.03	0.03	26.79
	0.03	0.04	0.04	18.62
	0.07	0.07	0.15	22.05
III	0.11	0.05	0.06	26.65
	0.16	0.12	0.17	20.33
	0.16	0.30	0.25	21.27
Total	0.85	0.87	1.99	155.87
Mean	0.09	0.09	0.22	17.31
Statistical significance 0.05 level				

Summary of Analysis of Variance

Source	D.F.	M.S.	F. Ratio
Replicate	2	674.26814	30.51**
Layer	3	77.23998	3.50*
R X L	6	76.70144	3.47*
Within Replicates	24	22.09858	
Total	35		

TABLE III

AVERAGE GRAM EQUIVALENTS OF AMMONIA ABSORBED PER ONE GRAM OF BEEF PER 1/4-INCH LAYER AT +15°F.

	Treatment--10 Ml. NH_3 at +15°F. for 24 Hrs.			
Replicates	Layer Two	Layer Three	Layer Four	Layer One
I	0.14	0.09	0.10	17.31
	0.09	0.09	0.14	13.84
	0.08	0.08	0.07	13.55
II	0.05	0.06	0.10	22.09
	0.22	0.21	0.18	15.19
	0.06	0.07	0.08	16.87
III	0.21	0.13	0.19	24.50
	0.13	0.11	0.11	13.43
	0.02	0.23	0.24	18.13
Total	1.00	1.07	1.21	154.91
Mean	0.11	0.11	0.13	17.21
Statistical significance 0.05 level				

Summary of Analysis of Variance

Source	D.F.	M.S.	F. Ratio
Replicate	2	657.66785	396.19**
Layer	3	81.87063	49.31**
R X L	6	82.01335	49.40**
Within Replicates	24	1.65634	
Total	35		

TABLE IV

ANALYSIS OF VARIANCE ON THE SUMMARY
OF TABLES I, II, AND III

Source	D.F.	M.S.	F. Ratio
Replicate	2	51.03832	10.46**
Layer	3	1666.33606	340.76**
Temperature	2	19.07923	3.91*
R x L	6	51.06911	10.47**
R x T	4	2.14286	0.44 N.S.
L x T	6	19.61847	4.02**
R x L x T	12	2.05874	0.42 N.S.
Within Replicates	72	4.87733	
Total	107		

absorbed in layers within replicates and layers compared to temperature.

As shown by the Duncan's Multiple Range Test, Tables V through VII display the penetration rate of ammonia in pork samples. In general, the same inferences can be drawn concerning pork as were made of the beef. Although, by the analysis of variance the gram equivalents of ammonia absorbed in layers between replicates was only significantly different at the +15°F. treatment.

Table VIII compares Tables V through VII by the analysis of variance. As shown in this table the gram equivalents of ammonia absorbed per layer of pork were not affected by the temperatures. However, there was a highly significant difference in the gram equivalents of ammonia absorbed per layer.

II. pH OF BEEF AND PORK SAMPLES

The effect of ammonia on the pH of beef is shown in Tables IX through XI by the Duncan's Multiple Range Test. In general, the pH of the first or exposed layer was significantly higher than the pH of layers two, three, and four at all temperatures. As shown, no significant difference

TABLE V

AVERAGE GRAM EQUIVALENTS OF AMMONIA ABSORBED PER ONE GRAM OF PORK PER 1/4-INCH LAYER AT -20°F.

	Treatment--10 Ml. NH_3 at -20°F. for 24 Hrs.			
Replicates	Layer Four	Layer Three	Layer Two	Layer One
I	0.30	0.21	0.20	9.18
	0.34	0.70	1.00	16.60
	0.49	0.59	0.62	10.40
II	0.24	0.48	1.15	22.76
	0.62	0.64	0.81	14.67
	0.11	1.30	1.60	28.37
III	0.00	0.00	0.04	27.11
	0.00	0.00	0.00	24.02
	0.00	0.00	0.00	23.84
Total	2.10	3.92	5.42	176.95
Mean	0.23	0.43	0.60	19.66
Statistical significance 0.05 level				

Summary of Analysis of Variance

Source	D.F.	M.S.	F. Ratio
Replicate	2	834.48058	49.76**
Layer	3	95.37420	5.69**
R X L	6	92.14635	5.49**
Within Replicates	24	16.77471	
Total	35		

TABLE VI

AVERAGE GRAM EQUIVALENTS OF AMMONIA ABSORBED PER ONE GRAM OF PORK PER 1/4-INCH LAYER AT 0°F.

	Treatment--10 Ml. NH_3 at 0°F. for 24 Hrs.			
Replicates	Layer Four	Layer Three	Layer Two	Layer One
I	0.20	0.24	0.25	20.32
	0.37	0.61	0.54	31.30
	0.70	1.19	1.38	28.05
II	0.49	0.46	0.49	10.55
	0.78	0.68	0.66	13.19
	1.59	1.71	1.93	22.35
III	0.38	0.38	0.37	16.08
	0.35	0.26	0.00	13.53
	0.00	0.00	0.00	19.07
Total	4.86	5.53	5.62	174.44
Mean	0.54	0.61	0.62	19.38
Statistical significance 0.05 level				

Summary of Analysis of Variance

Source	D.F.	M.S.	F. Ratio
Replicate	2	784.94156	60.90**
Layer	3	98.06543	7.61**
R X L	6	100.89502	7.83**
Within Replicates	24	12.88613	
Total	35		

TABLE VII

AVERAGE GRAM EQUIVALENTS OF AMMONIA ABSORBED PER ONE GRAM OF PORK PER 1/4-INCH LAYER AT +15°F.

	Treatment--10 Ml. NH_3 at +15°F. for 24 Hrs.			
Replicates	Layer Two	Layer Three	Layer Four	Layer One
I	0.44	0.62	0.41	46.91
	0.15	0.11	0.12	18.22
	0.55	0.50	0.04	8.07
II	0.16	1.41	2.04	39.69
	1.68	1.87	2.24	44.02
	1.51	0.77	0.67	33.29
III	0.00	0.00	0.00	9.06
	0.35	0.03	0.31	23.30
	0.00	0.00	0.00	22.05
Total	4.84	5.31	5.84	244.61
Mean	0.53	0.59	0.64	27.17
Statistical significance 0.05 level	_____			

Summary of Analysis of Variance

Source	D.F.	M.S.	F. Ratio
Replicate	2	1567.13306	24.88**
Layer	3	207.59265	3.29*
R X L	6	199.52542	3.17*
Within Replicates	24	62.99974	
Total	35		

TABLE VIII

ANALYSIS OF VARIANCE ON THE SUMMARY
OF TABLES V, VI, AND VII

Source	D.F.	M.S.	F. Ratio
Replicate	2	43.21175	1.26 N.S.
Layer	3	3131.25816	91.32**
Temperature	2	0.01799	0.00 N.S.
R x L	6	14.17216	0.41 N.S.
R x T	4	12.04605	0.35 N.S.
L x T	6	0.60451	0.02 N.S.
R x L x T	12	13.59499	0.40 N.S.
Within Replicates	72	34.29305	
Total	107		

TABLE IX

pH OF BEEF PER 1/4-INCH LAYER AT -20°F.

Replicates	Control	Treatment--10 Ml. NH_3 at -20°F. for 24 Hrs.			
		Layer Three	Layer Four	Layer Two	Layer One
		5.40	5.40	5.40	9.10
I	5.45	5.65	5.65	5.65	8.80
		5.70	5.80	5.70	8.20
		5.75	5.75	5.70	9.20
II	5.55	5.70	5.70	5.75	9.20
		6.25	6.25	6.40	9.20
		5.70	5.65	5.60	9.20
III	5.52	5.60	5.60	5.75	9.35
		5.65	5.70	5.70	9.10
Total		51.40	51.50	51.65	81.35
Mean		5.71	5.72	7.73	9.03
Statistical significance 0.05 level					

Summary of Analysis of Variance

Source	D.F.	M.S.	F. Ratio
Replicate	2	23.56549	336.77**
Layer	3	2.91528	41.57**
R X L	6	3.16298	45.14**
Within Replicate	24	0.07062	
Total	35		

TABLE X

pH OF BEEF PER 1/4-INCH LAYER AT 0°F.

Replicates	Control	Treatment--10 Ml. NH_3 at 0°F. for 24 Hours			
		Layer Four	Layer Two	Layer Three	Layer One
		5.60	5.60	5.60	8.80
I	5.45	5.65	5.65	5.65	8.80
		5.60	5.60	5.65	8.20
		5.60	5.60	5.65	9.50
II	5.55	5.65	5.65	5.65	9.40
		5.70	5.65	5.70	9.40
		5.70	5.65	5.65	9.30
III	5.52	5.85	5.80	5.80	9.35
		5.90	6.50	6.00	9.30
Total		51.25	51.35	51.70	82.05
Mean		5.69	5.70	5.74	9.11
Statistical significance 0.05 level					

Summary of Analysis of Variance

Source	D.F.	M.S.	F. Ratio
Replicate	2	25.42590	282.56**
Layer	3	3.11711	34.67**
R X L	6	3.03683	33.78**
Within Replicates	24	0.08604	
Total	35		

TABLE XI

pH OF BEEF PER 1/4-INCH LAYER AT +15°F.

Replicates	Control	Treatment--10 Ml. NH_3 at +15°F. for 24 Hours			
		Layer Three	Layer Four	Layer Two	Layer One
I	5.45	5.70	5.70	5.70	9.10
		5.75	6.00	5.80	9.05
		5.60	5.70	5.60	9.15
II	5.55	5.60	5.70	5.70	9.50
		5.85	5.90	5.95	9.35
		5.68	5.70	5.65	9.45
III	5.52	5.80	5.85	5.85	9.45
		5.70	5.70	5.70	9.15
		6.00	5.95	6.30	9.40
Total		51.68	52.20	52.25	83.60
Mean		5.74	5.80	5.80	9.28
Statistical significance 0.05 level					

Summary of Analysis of Variance

Source	D.F.	M.S.	F. Ratio
Replicate	2	27.40536	913.67**
Layer	3	3.19010	106.33**
R X L	6	3.12038	104.00**
Within Replicates	24	0.03207	
Total	35		

of pH existed between layers two, three, and four at all temperatures. However, as shown by the analysis of variance there was a highly significant difference in pH between layers within replicates. Tables IX through XI and XIII through XV indicate that the pH of all layers at the three temperatures remained above the pH of the control.

Tables XIII through XV show the pH of the pork samples. In general, the data indicates that the results on pork were similar to the results obtained on beef.

An analysis of variance of Tables IX through XI as shown in Table XII indicates that the pH of beef samples was not significantly affected by the temperatures. However, a highly significant difference was found between replicates and layers.

Tables XIII through XV were analyzed by the analysis of variance as shown in Table XVI. This table indicates that temperature had no significant effect on the pH of pork samples, but there was a highly significant difference between replications and layers.

III. COLOR ANALYSIS

Duncan's Multiple Range Test in Tables XVII through XIX

TABLE XII

ANALYSIS OF VARIANCE ON THE SUMMARY OF TABLES IX, X, AND XI

Source	D.F.	M.S.	F. Ratio
Replicate	2	0.65991	16.50**
Layer	3	78.38312	1959.50**
Temperature	2	0.07505	2.00 N.S.
R x L	6	0.12153	3.00 N.S.
R x T	4	0.08756	2.25 N.S.
L x T	6	0.08508	2.25 N.S.
R x L x T	12	0.01061	0.25 N.S.
Within Replicates	72	0.03915	
Total	107		

TABLE XIII

pH OF PORK PER 1/4-INCH LAYER AT -20°F.

Replicates	Control	Treatment--10 Ml. NH_3 at -20°F. for 24 Hours			
		Layer Four	Layer Three	Layer Two	Layer One
I	5.80	6.15	6.15	6.10	9.45
		6.60	6.70	6.80	9.30
		6.49	6.50	6.60	9.50
II	5.40	6.80	6.90	6.75	9.30
		6.60	6.60	6.60	9.20
		6.60	6.60	6.90	9.50
III	6.00	6.00	6.00	6.10	9.40
		5.75	5.70	5,70	9.38
		5.80	5.75	5.85	9.50
Total		56.79	56.90	57.40	84.51
Mean		6.31	6.32	6.37	9.39
Statistical significance 0.05 level					

Summary of Analysis of Variance

Source	D.F.	M.S.	F. Ratio
Replicate	2	20.88508	116.06**
Layer	3	2.46822	13.72**
R X L	6	2.32820	12.94**
Within Replicates	24	0.17933	
Total	35		

TABLE XIV

pH OF PORK PER 1/4-INCH LAYER AT 0°F.

Replicates	Control	Treatment--10 Ml. NH_3 at 0°F. for 24 Hours			
		Layer Three	Layer Two	Layer Four	Layer One
I	5.80	6.20	6.20	6.10	9.00
		6.30	6.30	6.30	9.50
		7.00	7.20	7.60	9.50
II	5.40	6.20	6.25	6.10	9.20
		6.10	6.10	6.25	9.00
		7.00	7.20	6.84	9.36
III	6.00	6.50	6.55	6.50	9.40
		6.30	5.82	6.40	9.30
		5.80	5.80	5.90	9.45
Total		57.40	57.42	57.99	82.81
Mean		6.37	6.38	6.44	9.20
Statistical significance 0.05 level					

Summary of Analysis of Variance

Source	D.F.	M.S.	F. Ratio
Replicate	2	18.56244	103.11**
Layer	3	1.85311	10.28**
R X L	6	2.60652	14.50**
Within Replicates	24	0.18028	
Total	35		

TABLE XV

pH OF PORK PER 1/4-INCH LAYER AT +15°F.

Replicates	Control	Treatment--10 Ml. NH_3 at +15°F. for 24 Hours			
		Layer Three	Layer Four	Layer Two	Layer One
I	5.40	6.45	6.49	6.40	9.45
		6.10	6.10	6.50	9.30
		6.40	6.40	6.45	8.90
II	5.80	7.25	7.35	7.24	9.70
		7.10	7.20	7.40	9.70
		6.50	6.40	7.20	9.67
III	6.00	6.00	6.00	6.10	9.40
		5.70	5.75	5.70	9.38
		5.75	5.80	5.85	9.50
Total		57.25	57.49	58.84	85.00
Mean		6.36	6.38	6.53	9.44
Statistical significance 0.05 level					

Summary of Analysis of Variance

Source	D.F.	M.S.	F. Ratio
Replicate	2	21.54938	65.30**
Layer	3	2.72831	8.27**
R X L	6	1.79561	5.45**
Within Replicates	24	0.33421	
Total	35		

TABLE XVI

ANALYSIS OF VARIANCE ON THE SUMMARY
OF TABLES XII, XIV, AND XV

Source	D.F.	M.S.	F. Ratio
Replicate	2	3.13745	28.55**
Layer	3	60.39900	549.09**
Temperature	2	0.14355	1.27 N.S.
R x L	6	0.40288	3.64**
R x T	4	0.30976	2.82 N.S.
L x T	6	0.01970	0.18 N.S.
R x L x T	12	0.07471	0.64 N.S.
Within Replicates	72	0.10937	
Total	107		

TABLE XVII

SUMMATION* OF HUNTER "L", "a" AND "b"
VALUES OF BEEF SAMPLES AT -20°F.

Replicates	Treatment--10 Ml. NH_3 at -20°F. for 24 Hours			
	Sample 1	Sample 3	Control	Sample 2
I	27.40	26.92	26.68	29.61
II	27.82	25.63	26.15	26.38
III	23.36	26.17	27.42	25.07
Total	78.58	78.72	80.25	81.06
Mean	26.19	26.24	26.75	27.02
Statistical significance 0.05 level				

Summary of Analysis of Variance

Source	D.F.	M.S.	F. Ratio
Replicates	2	1.10643	0.38 N.S.
Samples	3	2.16943	0.75 N.S.
Residual	6	2.90579	
Total	11		

* $E = \sqrt{L^2 + a^2 + b^2}$

TABLE XVIII

SUMMATION OF HUNTER "L", "a" AND "b"
VALUES OF BEEF SAMPLES AT 0°F.

	Treatment--10 Ml. NH_3 at 0°F. for 24 Hours			
Replicates	Control	Sample 2	Sample 1	Sample 3
I	26.68	25.15	26.77	27.54
II	26.15	28.35	26.79	29.46
III	27.42	27.98	28.74	27.78
Total	80.25	81.48	82.30	84.78
Mean	26.75	27.16	27.43	28.26
Statistical significance 0.05 level				

Summary of Analysis of Variance

Source	D.F.	M.S.	F. Ratio
Replicates	2	2.12086	1.19 N.S.
Samples	3	0.12603	0.07 N.S.
Residual	6	1.78918	
Total	11		

TABLE XIX

SUMMATION OF HUNTER "L", "a" AND "b"
VALUES FOR BEEF SAMPLES AT +15°F.

	Treatment--10 Ml. NH_3 at +15°F. for 24 Hours			
Replicates	Control	Sample 3	Sample 2	Sample 1
I	26.68	27.36	27.89	29.27
II	26.15	29.15	29.35	29.03
III	27.42	26.38	28.93	28.14
Total	80.25	82.89	86.17	86.44
Mean	26.75	27.63	28.72	28.81
Statistical significance 0.05 level				

Summary of Analysis of Variance

Source	D.F.	M.S.	F. Ratio
Replicates	2	1.49626	0.91 N.S.
Samples	3	0.79201	0.48 N.S
Residual	6	1.64616	
Total	11		

shows that there was no significant difference in color between the treated beef samples and the control. The same results are indicated by the analysis of variance on Table XVII. When comparing Tables XVII through XIX by the analysis of variance, as shown in Table XX, the color of the treated beef samples was not significantly affected by the ammonia treatments.

The analysis of pork color as shown by the Duncan's Multiple Range Test and the analysis of variance in Tables XXI through XXIII indicate that ammonia at the three different temperatures had no significant effect on the color. However, when an analysis of variance was run on the previous tables as shown in Table XXIV temperature seems to have a highly significant effect on the color.

With regards to these data, there appears to be some variation with the results reported by Kassem (20) and Phillips (26). According to Kassem, ground beef absorbs a maximum quantity of ammonia over a 24-hour exposure period. It should be pointed out that in the experiments of this thesis all exposures to ammonia were conducted on a 24-hour period per replication.

TABLE XX

ANALYSIS OF VARIANCE ON THE SUMMARY
OF TABLES XVII, XVIII, AND XIX

Source	D.F.	M.S.	F. Ratio
Replicate	2	6.19421	3.54 N.S.
Samples	3	1.35662	0.78 N.S.
Temperature	2	0.65654	0.38 N.S.
R x S	6	1.61539	0.92 N.S.
R x T	4	3.44447	1.97 N.S.
S x T	6	1.15302	0.66 N.S.
Residual	12	1.74875	
Total	35		

TABLE XXI

SUMMATION OF HUNTER "L", "a" AND "b" VALUES FOR PORK SAMPLES AT -20°F.

	Treatment--10 Ml. NH_3 at -20°F. for 24 Hours			
Replicates	Control	Sample 2	Sample 3	Sample 1
I	39.98	44.56	40.08	51.72
II	38.16	43.95	48.90	39.93
III	28.25	31.63	36.15	39.84
Total	106.39	120.14	125.13	131.49
Mean	35.46	40.04	41.71	43.83
Statistical significance 0.05 level				

Summary of Analysis of Variance

Source	D.F.	M.S.	F. Ratio
Replicate	2	9.91507	0.15 N.S.
Sample	3	23.93487	0.37 N.S.
Residual	6	64.47794	
Total	11		

Crane Creek

TABLE XXII

SUMMATION OF HUNTER "L", "a", AND "b" VALUES FOR PORK SAMPLES AT 0°F.

	Treatment--10 Ml. NH_3 at 0°F. for 24 Hours			
Replicates	Control	Sample 3	Sample 1	Sample 2
I	39.98	36.57	41.49	41.21
II	38.16	44.40	38.65	38.96
III	28.25	31.40	32.38	38.60
Total	106.39	112.37	112.52	118.77
Mean	35.46	37.45	37.50	39.59
Statistical significance 0.05 level				

Summary of Analysis of Variance

Source	D.F.	M.S.	F. Ratio
Replicate	2	0.85931	0.02 N.S.
Samples	3	5.96627	0.16 N.S.
Residual	6	36.46307	
Total	11		

TABLE XXIII

SUMMATION OF HUNTER "L", "a" AND "b"
VALUES FOR PORK SAMPLES AT +15°F.

	Treatment--10 Ml. NH_3 at +15°F. for 24 Hours			
Replicates	Control	Sample 1	Sample 3	Sample 2
I	39.98	37.97	42.52	47.21
II	38.16	48.60	47.62	38.53
III	28.25	33.18	30.78	43.75
Total	106.39	119.75	120.92	129.49
Mean	35.46	39.91	40.30	43.16
Statistical significance 0.05 level				

Summary of Analysis of Variance

Source	D.F.	M.S.	F. Ratio
Replicate	2	39.87517	0.84 N.S.
Samples	3	39.78196	0.84 N.S.
Residual	6	47.26406	
Total	11		

TABLE XXIV

ANALYSIS OF VARIANCE ON THE SUMMARY
OF TABLES XXI, XXII, AND XXIII

Source	D.F.	M.S.	F. Ratio
Replicate	2	25.57528	1.37 N.S.
Sample	3	56.50064	3.02 N.S.
Temperature	2	284.41182	15.18**
R x S	6	10.13830	0.54 N.S.
R x T	4	3.38287	0.18 N.S.
S x T	6	27.01266	1.44 N.S.
Residual	12	18.73467	
Total	35		

IV. ORGANOLEPTIC EVALUATION OF BEEF SAMPLES

The effect of ammonia on the organoleptic evaluation of the odor in beef, as shown in Tables XXV through XXVII, indicates no significant difference between the control and treated samples by the Duncan's Multiple Range Test. An analysis of variance, however, indicated a significant difference among individuals in Table XXV, while in Table XXVI the analysis of variance indicated a significant difference between individuals within replicates. An analysis of variance of Tables XXV through XXVII, as shown in Table XXVIII, shows a significant difference between layers within replicates.

Duncan's Multiple Range Test, as shown in Tables XXIX through XXXI, indicated that the ammonia has imparted an atypical flavor to the beef. However, Table XXIX indicates by the Duncan's Multiple Range Test and the analysis of variance that no significant difference was found between the control and samples. In Table XXX and XXXI, Duncan's Multiple Range Test shows that a significant difference was found between the control and layers one through four. By the analysis of variance, Tables XXX and

TABLE XXV

ORGANOLEPTIC EVALUATION OF BEEF SAMPLES
FOR ODOR AT -20°F.

Individual	Replicate	Treatment--10 Ml. NH_3 at -20°F. for 24 Hours				
		Layer Four	Layer Three	Layer Two	Layer One	Control
1	I	-1	0	-1	-1	0
	II	-1	0	-1	0	0
	III	0	-1	0	0	0
2	I	0	0	0	0	0
	II	-1	0	0	0	0
	III	0	-1	0	0	0
3	I	-1	-1	0	-1	0
	II	0	0	0	0	0
	III	0	0	0	0	0
4	I	0	0	0	0	0
	II	0	0	0	0	0
	III	0	0	0	0	0
Total		-4.00	-3.00	-2.00	-2.00	0.00
Mean		-0.33	-0.25	-0.16	-0.16	0.00
Statistical significance 0.05 level						

Summary of Analysis of Variance

Source	D.F.	M.S.	F. Ratio
Individual	3	0.41667	3.70*
Layer	4	0.18333	1.63 N.S.
Replicate	2	0.21667	1.93 N.S.
I x L	12	0.08333	0.74 N.S.
I x R	6	0.21667	1.93 N.S.
L x R	8	0.19583	1.74 N.S.
Residual	24	0.11250	
Total	59		

TABLE XXVI

ORGANOLEPTIC EVALUATION OF BEEF SAMPLES FOR ODOR AT 0°F.

		Treatment--10 Ml. NH_3 at 0°F. for 24 Hours				
Individual	Replicate	Layer One	Layer Four	Layer Three	Layer Two	Control
	I	-1	0	-1	0	0
1	II	-1	0	0	0	0
	III	0	-1	-1	0	0
	I	0	-1	+1	0	0
2	II	0	0	-1	0	0
	III	0	0	0	0	0
	I	-1	-1	0	-1	0
3	II	0	0	0	0	0
	III	0	0	0	0	0
	I	0	0	0	0	0
4	II	-2	-1	-1	-1	0
	III	0	0	0	0	0
Total		-5.00	-4.00	-3.00	-2.00	0.00
Mean		-0.41	-0.33	-0.25	-0.16	0.00
Statistical significance 0.05 level						

Summary of Analysis of Variance

Source	D.F.	M.S.	F. Ratio
Individual	3	0.32778	1.44 N.S.
Layer	4	0.41667	1.83 N.S.
Replicate	2	0.20000	0.88 N.S.
I x L	12	0.16111	0.71 N.S.
I x R	6	0.64444	2.83*
L x R	8	0.11667	0.51 N.S.
Residual	24	0.22778	
Total	59		

TABLE XXVII

ORGANOLEPTIC EVALUATION OF BEEF SAMPLES
FOR ODOR AT +15°F.

Individual	Replicate	Treatment--10 Ml.NH_3 at +15°F. for 24 Hours				
		Layer One	Layer Three	Layer Four	Layer Two	Control
	I	-1	-1	-1	0	0
1	II	0	0	0	-1	0
	III	-1	-1	0	0	0
	I	0	0	0	0	0
2	II	0	0	0	0	0
	III	0	0	0	-1	0
	I	0	0	0	0	0
3	II	0	0	0	0	0
	III	0	0	-1	0	0
	I	0	0	0	0	0
4	II	-1	-1	0	0	0
	III	0	0	0	0	0
Total		-3.00	-3.00	-2.00	-2.00	0.00
Mean		-0.25	-0.25	-0.16	-0.16	0.00
Statistical significance 0.05 level						

Summary of Analysis of Variance

Source	D.F.	M.S.	F. Ratio
Individual	3	0.19444	1.08 N.S.
Layer	4	0.18333	1.02 N.S.
Replicate	2	0.01667	0.92 N.S.
I x L	12	0.13889	0.77 N.S.
I x R	6	0.19444	1.08 N.S.
L x R	8	0.05833	0.32 N.S.
Residual	24	0.18056	
Total	59		

TABLE XXVIII

ANALYSIS OF VARIANCE ON THE SUMMARY OF TABLES XXV, XXVI, AND XXVII

Source	D.F.	M.S.	F. Ratio
Individual	3	0.34630	2.31 N.S.
Layer	4	0.24444	1.63 N.S.
Replicate	2	0.07222	0.48 N.S.
Temperature	2	0.13889	0.93 N.S.
I x L	12	0.17037	1.13 N.S.
I x R	6	0.12407	0.83 N.S.
I x T	6	0.21296	1.42 N.S.
L x R	8	0.44028	2.93*
L x T	8	0.15278	1.02 N.S.
R x T	4	0.25556	1.70 N.S.
I x L x R	24	0.09398	0.63 N.S.
I x L x T	24	0.24537	1.63 N.S.
I x R x T	12	0.27407	1.83 N.S.
L x R x T	16	0.15486	1.03 N.S.
Residual	48	0.15023	
Total	179		

TABLE XXIX

ORGANOLEPTIC EVALUATION OF BEEF SAMPLES FOR FLAVOR AT -20°F.

Individual	Replicate	Treatment--10 Ml. NH_3 at -20°F. for 24 Hours				
		Layer Four	Layer Two	Layer Three	Layer One	Control
1	I	-2	0	-1	0	0
	II	-2	-1	-2	-1	0
	III	-1	-2	-2	-1	0
2	I	+1	-2	+1	-1	0
	II	-2	+1	-1	+1	0
	III	-1	-1	0	+1	0
3	I	-2	0	-1	-2	0
	II	-1	-1	-1	0	0
	III	0	-2	0	-3	0
4	I	-1	-1	-1	0	0
	II	-1	-1	0	-2	0
	III	0	0	0	0	0
Total		-12.00	-10.00	-8.00	-8.00	0.00
Mean		-1.00	-0.83	-0.66	-0.66	0.00
Statistical significance 0.05 level						

Summary of Analysis of Variance

Source	D.F.	M.S.	F. Ratio
Individual	3	2.02222	1.97 N.S.
Layer	4	1.73333	1.69 N.S.
Replicate	2	0.06667	0.06 N.S.
I x L	12	0.57778	0.56 N.S.
I x R	6	0.55556	0.54 N.S.
L x R	8	0.48333	0.47 N.S.
Residual	24	1.02778	
Total	59		

TABLE XXX

ORGANOLEPTIC EVALUATION OF BEEF SAMPLES
FOR FLAVOR AT 0°F.

Individual	Replicate	Treatment--10 Ml. NH_3 at 0°F. for 24 Hours				
		Layer Four	Layer One	Layer Two	Layer Three	Control
1	I	-2	-1	-2	-1	0
	II	-1	-2	-1	0	0
	III	-2	-2	-1	-2	0
2	I	-1	0	-1	0	0
	II	-1	0	0	-1	0
	III	0	+1	-1	-1	0
3	I	0	-1	-1	0	0
	II	0	-2	-1	0	0
	III	-2	-1	-1	0	0
4	I	0	0	0	0	0
	II	-1	-2	0	0	0
	III	-1	0	0	0	0
Total		-11.00	-10.00	-9.00	-5.00	0.00
Mean		-0.91	-0.83	-0.75	-0.41	0.00
Statistical significance 0.05 level						

Summary of Analysis of Variance

Source	D.F.	M.S.	F. Ratio
Individual	3	2.32778	8.38**
Layer	4	1.70833	6.15**
Replicate	2	0.11667	0.42 N.S.
I x L	12	0.61944	2.23*
I x R	6	0.36111	1.30 N.S.
L x R	8	0.53333	1.92 N.S.
Residual	24	0.27778	
Total	59		

TABLE XXXI

ORGANOLEPTIC EVALUATION OF BEEF SAMPLES
FOR FLAVOR AT +15°F.

		Treatment--10 Ml. NH_3 at +15°F. for 25 Hours				
Individual	Replicate	Layer Three	Layer One	Layer Four	Layer Two	Control
	I	-2	-1	-2	-2	0
1	II	-2	-1	-2	-1	0
	III	-2	-1	-2	0	0
	I	-1	0	0	+1	0
2	II	-1	0	0	-1	0
	III	-1	0	0	+1	0
	I	-1	-2	0	-2	0
3	II	-1	-2	-1	-1	0
	III	0	-2	-1	-1	0
	I	-1	0	0	-1	0
4	II	0	-1	0	0	0
	III	0	-1	0	0	0
Total		-12.00	-11.00	-8.00	-7.00	0.00
Mean		-1.00	-0.91	-0.66	-0.58	0.00
Statistical significance 0.05 level						

Summary of Analysis of Variance

Source	D.F.	M.S.	F. Ratio
Individual	3	3.52778	11.14**
Layer	4	1.58333	4.99**
Replicate	2	0.21667	0.68 N.S.
I x L	12	0.75000	2.37*
I x R	6	0.26111	0.82 N.S.
L x R	8	0.63333	1.99 N.S.
Residual	24	0.31667	
Total	59		

XXXI indicate a highly significant difference between individuals and a highly significant difference between layers. An analysis of variance of Tables XXIX through XXXI, as shown in Table XXXII, indicates that there was a highly significant difference between individuals and layers. It also shows there was a significant difference in layers within replicates.

It should be pointed out that the taste panel members stated that they did not detect any ammonia odor or flavor in any of the samples. However, several panelists pointed out that a metallic flavor was detected in some of the samples.

V. SHEAR EVALUATION

The Duncan's Multiple Range Test, as shown in Table XXXIII, indicates no significant difference between the +15°F. and -20°F. treatment. No significant difference was found between the 0°F. treatment and the control. It was concluded from this test that the ammonia made the beef in the +15°F. and -20°F. treatments more tender. However, because the 0°F. treatment was not significantly affected the results are questionable. Because it was not possible

TABLE XXXII

ANALYSIS OF VARIANCE ON THE SUMMARY OF TABLES XXIX, XXX, AND XXXI

Source	D.F.	M.S.	F. Ratio
Individual	3	1.00741	1.60 N.S.
Layer	4	1.06389	1.69 N.S.
Replicate	2	0.20000	0.32 N.S.
Temperature	2	0.21667	0.34 N.S.
I x L	12	2.12315	3.37**
I x R	6	0.62963	0.99 N.S.
I x T	6	0.17963	0.29 N.S.
L x R	8	1.79722	2.85*
L x T	8	0.48056	0.76 N.S.
R x T	4	0.24167	0.38 N.S.
I x L x R	24	0.66204	1.05 N.S.
I x L x T	24	0.37870	0.60 N.S.
I x R x T	12	0.49352	0.78 N.S.
L x R x T	16	0.52639	0.84 N.S.
Residual	48	0.63009	
Total	179		

TABLE XXXIII

AVERAGE SHEAR VALUES OF BEEF CORES IN POUNDS*

Replicate	Shear	Treatment 10 Ml. NH_3 +15°F.	-20°F.	0°F.	Control
1	1 & 2	8.53	8.85	10.30	7.65
2	1 & 2	5.81	5.00	8.99	8.30
3	1 & 2	7.41	8.89	5.99	9.71
Total		21.75	22.74	25.28	25.66
Pooled Mean		7.25	7.58	8.42	8.55
Statistical significance 0.05 level					

Summary of Analysis of Variance

Source	D.F.	M.S.	F. Ratio
Replicate	2	6.71629	2.47 N.S.
Core	5	18.13082	6.67**
Shear	3	16.09424	5.92**
Temperature	2	12.14032	4.47*
R x C	10	12.03952	4.43**
R x S	6	20.94309	7.71**
R x T	4	3.49852	1.29 N.S.
C x S	15	14.26050	5.25**
C x T	10	5.04538	1.86 N.S.
S x T	6	7.52508	2.77*
R x C x S	30	6.44823	2.37**
R x C x T	20	5.23649	1.93*
R x S x T	12	4.91058	1.81 N.S.
C x S x T	30	3.96006	1.46 N.S.
Residual	60	2.71703	
Total	215		

*These data are summarized from Tables XXXIV, XXXV, and XXXVI in the Appendix.

to randomly sample the major muscles of the round, the differences obtained are probably due to sampling error.

An analysis of variance of Table XXXIII shows no significant difference between replicates. However, a highly significant difference was noted in cores and shears, whereas only significant differences were noted among temperatures.

CHAPTER V

SUMMARY

A study has been made to determine the effect ammonia has on frozen beef and pork musculature.

Under conditions of the experiment reported in this paper, it was found that:

1. Ammonia does penetrate into beef and pork musculature; however, the greatest penetration rate was in the first 1/4-inch layers.

2. The pH of all layers in treated samples was higher than the control.

3. The pH of the first 1/4-inch layer in all samples, was approximately three units higher than the second, third, and fourth layers.

4. The color of the samples was not affected significantly by the treatment.

5. The flavor of beef was affected significantly by the ammonia, but not the odor.

6. The ammonia probably has a tenderizing effect on beef.

BIBLIOGRAPHY

BIBLIOGRAPHY

1. Alsmeyer, R. H., J. W. Thornton, and R. L. Hiner. 1965. Cross-sectional tenderness variations among six locations of pork longissimus dorse. Journal of Food Science, 30, 181.

2. Beardsell, A. C. 1961. Relating frozen food containers to realities of storage and distribution. Quick Frozen Foods, 24, 271.

3. Bratzler, L. J. 1949. Determining the tenderness of meat by the Warner-Bratzler method. Proceedings: Second Annual Reciprocal Meat Conference. National Live Stock and Meat Board, 117.

4. Bratzler, L. J., and H. D. Smith. 1963. A comparison of the press method with taste-panel and shear measurements of tenderness in beef and lamb muscles. Journal of Food Science, 28, 99.

5. Brennan, E., I. Leone, and R. H. Daines. 1964. Ammonia injures apples, peaches in cold storage. New Jersey Agriculture, 46, 5.

6. Brown, D. W., and AMI Dolev. 1963. Effect of freezing on auto-oxidation of oxymyoglobin in solutions. Journal of Food Science, 28, 211.

7. Burrill, L. M., D. Deethardt, and R. L. Saffle. 1962. Two mechanical devices compared with taste-panel evaluation for measuring tenderness. Food Technology, 16, 145.

8. Butler, O. D. 1953. Some causes and measurements of color changes in fresh retail meat cuts. Ph.D. Thesis. Michigan State College, East Lansing.

9. Desrosier, N. W. 1963. "The Technology of Food Preservation." p. 65. The Avi Publishing Company, Inc., Westport, Conn.

10. Duren, J. T. 1962. Effect of ammonia on color and other quality factors of frozen foods. Special Problem Dept. of Food Technology, University of Tennessee, Knoxville.

11. Goll, D. E., D. W. Henderson, and E. A. Kline. 1964. Post-mortem changes in physical and chemical properties of bovine muscle. Journal of Food Science, 29, 590.

12. Hall, J. L., C. E. Latschar, and D. L. Mackintosh. 1944. Characteristics of dark cutting beef. Survey and preliminary investigations. Kansas Agri. Exp. Sta. Tech. Bull., 58, Part IV.

13. Hamm, R., and R. E. Deatherage. 1960. Changes in hydration, solubility and changes of muscle proteins during heating of meat. Food Research, 25, 587.

14. Hedrick, H. B. 1958. Etiology and possible preventive measures in dark cutter syndrome. Journal of Veterinary Medicine, Vol. 53, 466.

15. Hedrick, H. B., J. B. Boillot, D. E. Brady, and H. D. Naumann. 1959. Etiology of dark cutting beef. Research Bulletin, 717, University of Missouri, Agri. Exp. Sta.

16. Hedrick, H. B., M. E. Bailey, F. C. Parish, and H. D. Naumann. 1963. Effect of adrenaline stress on pork quality. Journal of Animal Science, 22, 827.

17. Hedrisk, H. B., and W. C. Stringer. 1964. Dark cutting beef--its cause and prevention. Folder 134. Ext. Div., University of Missouri.

18. Hostetler, R. L., and S. J. Ritchey. 1964. Effect of coring methods on shear values determined by Warner-Bratzler shear. Journal of Food Science, 29, 681.

19. Jacobson, M., and F. Fenton. 1956. Effects of three levels of nutrition and age on quality beef. 11. Color, total iron content and pH. Food Research, 21, 427.

20. Kassem. A. H. A. 1964. The effect of ammonia on frozen foods. M. S. Thesis, University of Tennessee, Knoxville, Tennessee.

21. Kauffman, R. G., Z. L. Carpenter, R. W. Bray, and W. G. Hockston. 1964. Biochemical properties of pork and their relationship to quality. 1. pH of chilled, aged, and cooked muscle tissue. Journal of Food Science, 29, 65.

22. Kulwich, R., R. W. Deeker, and R. H. Alsmeyer. 1963. Use of a slice tenderness evaluation device with pork. Food Technology, 17, 201.

23. Phillips, J. B. Jr. 1963. Flexible films. Food Technology, 17, 871.

24. Phillips, W. S. 1962. Changes observed in frozen food exposed to two concentrations of ammonia using two different overwraps. Unpublished paper, Food Technology Dept., University of Tennessee, Knoxville.

25. Sayre, R. N., J. Briskey, and W. G. Hoekstra. 1963. Effect of excitement, fasting, and sucrose feeding on porcine muscle phosphorylase and post-mortem glycolysis. Journal of Food Science, 28, 472.

26. Sharrah, N., M. Kunze, and R. M. Pangborn. 1965. Sensory and mechanical evaluation of animals of different breeds. Food Technology, 19 131.

27. Sharrah, N., M. S. Kunze, and R. M. Pangborn. 1965. Beef tenderness: comparison of sensory methods with the Warner-Bratzler and L.E.E.-Kramer shear presses. Food Technology, 19, 136.

28. Tauber, F. W., and S. Simon. 1963. Changes in the color of meat under various processing conditions. Food Technology, 17, 105.

29. Townsend, W. E., and L. J. Bratzler. 1958. Effect of storage conditions on the color of frozen packaged retail beef cuts. Food Technology, 12, 663.

30. Wismer-Pedersen, J., and E. J. Briskey. 1961. Relationship of post-mortem acidity and temperature. Food Technology, 15, 232.

APPENDIX

TABLE XXXIV

WARNER-BRATZLER SHEAR TEST FOR BEEF ROUND ROAST

		Treatment--10 Ml. NH_3 at -20°F. for 24 Hours							
Replicate	Shear	Core No. 1	2	3	4	5	6	Total	Shear Mean
I	1	8.50	9.40	9.80	7.50	6.80	11.00	53.00	8.83
	2	5.80	8.80	9.90	7.30	8.40	13.00	53.20	8.87
	C 1	6.20	8.50	9.00	9.50	5.70	6.20	45.10	7.52
	C 2	5.50	6.30	5.00	5.00	5.20	6.50	33.50	5.58
II	1	4.50	3.20	3.80	10.00	5.00	5.00	31.50	5.25
	2	6.00	3.00	3.00	8.50	4.30	3.70	28.50	4.75
	C 1	12.00	7.00	9.40	12.50	6.80	5.00	52.70	8.78
	C 2	10.00	7.90	9.40	7.00	4.00	5.50	44.50	7.42
III	1	9.20	8.30	5.40	9.00	14.00	11.50	57.40	9.57
	2	8.00	8.80	4.00	9.00	10.00	9.50	49.30	8.22
	C 1	10.50	14.00	7.80	12.20	7.80	9.00	61.30	10.22
	C 2	10.50	12.50	6.00	11.00	9.00	7.40	56.90	9.48

Summary of Analysis of Variance

Source	D.F.	M.S.	F. Ratio
Replicate	2	8.53930	1.21 N.S.
Core	5	8.72947	1.24 N.S.
Shear	3	5.87718	0.83 N.S.
R x C	10	16.49064	2.34*
R x S	6	2.43245	0.35 N.S.
C x S	15	4.21118	0.59 N.S.
Residual	30	7.04112	
Total	71		

TABLE XXXV

WARNER-BRATZLER SHEAR TEST FOR BEEF ROUND ROAST

Replicate	Shear	Treatment--10 Ml. NH_3 at 0°F. for 24 Hours: Core No. 1	2	3	4	5	6	Total	Shear Mean
I	1	12.80	7.50	8.80	8.00	12.50	15.00	64.60	10.77
	2	8.80	7.60	7.00	9.50	13.00	13.00	58.90	9.82
	C 1	6.20	8.50	9.00	9.50	5.70	6.20	45.10	7.52
	C 2	5.50	6.30	5.00	5.00	5.20	6.50	33.50	5.58
II	1	9.90	8.80	8.40	8.80	9.50	11.40	56.80	9.45
	2	10.50	8.40	7.90	6.40	10.00	8.00	51.20	8.53
	C 1	12.00	7.00	9.40	12.00	6.80	5.00	52.20	8.70
	C 2	10.70	7.90	9.40	7.00	4.00	5.50	44.50	7.42
III	1	6.70	8.20	6.40	5.80	5.60	3.30	36.00	6.00
	2	7.90	6.40	6.80	6.30	4.00	4.50	35.90	5.98
	C 1	6.80	9.00	7.40	10.80	8.80	10.80	53.60	8.93
	C 2	6.90	9.50	6.20	7.00	10.40	11.40	51.40	8.57

Summary of Analysis of Variance

Source	D.F.	M.S.	F. Ratio
Replicate	2	18.21097	3.03 N.S.
Core	5	2.21247	0.37 N.S.
Shear	3	7.11014	1.18 N.S.
R x C	10	10.25747	1.71 N.S.
R x S	6	7.72208	1.29 N.S.
C x S	15	1.80847	0.30 N.S.
Residual	30	6.00258	
Total	71		

TABLE XXXVI

WARNER-BRATZLER SHEAR TEST FOR BEEF ROUND ROAST

Replicate	Shear	Treatment--10 Ml. NH_3 at +15°F. for 24 Hours: Core No. 1	2	3	4	5	6	Total	Shear Mean
I	1	7.40	8.00	10.00	11.80	7.80	8.00	53.00	8.83
	2	6.20	7.00	8.00	10.80	8.80	8.50	49.30	8.22
	C 1	10.50	14.00	7.80	12.20	7.80	9.00	61.30	10.22
	C 2	10.50	12.50	6.00	11.50	9.00	7.40	56.90	9.48
II	1	7.60	6.30	4.00	5.30	10.80	3.40	37.40	6.23
	2	8.00	5.70	3.80	5.50	6.50	2.80	32.30	5.38
	C 1	6.80	9.00	7.40	10.80	8.80	10.80	53.60	8.93
	C 2	6.90	9.50	6.20	7.00	10.40	11.40	51.40	8.57
III	1	9.00	7.00	8.00	6.50	5.90	6.00	42.40	7.07
	2	10.00	10.00	8.00	8.00	5.00	5.50	46.50	7.75
	C 1	9.40	12.00	12.30	10.00	10.80	12.00	66.50	11.08
	C 2	9.00	11.00	10.00	7.50	10.40	12.00	59.90	9.98

Summary of Analysis of Variance

Source	D.F.	M.S.	F. Ratio
Replicate	2	6.61167	1.65 N.S.
Core	5	9.44758	2.35 N.S.
Shear	3	18.63384	4.64**
R x C	10	9.61200	2.39*
R x S	6	1.40370	0.35 N.S.
C x S	15	4.87240	1.21 N.S.
Residual	30	4.01759	
Total	71		

TABLE XXXVII

HUNTER "L", "a", AND "b" VALUES OF BEEF SAMPLES

Replicate	Values	Treatment 10 Ml. NH_3 at -20°F. for 24 Hours					
		Control	Sample 1	Sample 2	Sample 3	Total	Mean
I	L	26.0	26.4	28.4	26.0	106.8	26.76
	a	+3.3	+5.5	+6.3	+5.3	20.4	5.10
	b	+5.0	+4.9	+5.5	+4.6	19.9	4.97
II	L	25.4	26.9	25.8	24.9	103.00	25.75
	a	+3.7	+5.5	+3.9	+4.3	17.4	4.35
	b	+5.0	+4.5	+3.9	+4.3	17.7	4.42
III	L	25.7	23.0	24.5	25.8	99.9	24.75
	a	+7.1	+2.4	+3.5	+2.5	15.5	3.87
	b	+6.4	+3.3	+4.0	+3.6	17.3	4.32

TABLE XXXVIII

HUNTER "L", "a", AND "b" VALUES OF BEEF SAMPLES

Replicate	Values	Treatment 10 Ml. NH_3 at 0°F. for 24 Hours					
		Control	Sample 1	Sample 2	Sample 2	Total	Mean
	L	26.0	26.0	24.8	26.8	103.60	25.90
I	a	+3.3	+4.6	+2.3	+4.5	14.70	3.67
	b	+5.0	+4.5	+3.5	+4.5	17.50	4.37
	L	25.4	26.1	27.6	27.5	106.6	26.65
II	a	+3.7	+4.2	+4.6	+8.4	20.9	5.22
	b	+5.0	+4.4	+4.6	+6.4	20.4	5.10
	L	25.7	27.1	27.1	27.2	107.1	26.77
III	a	+7.1	+7.2	+5.2	+4.0	23.50	5.87
	b	+6.4	+6.3	+4.6	+4.0	21.3	5.32

TABLE XXXIX

HUNTER "L", "a", AND "b" VALUES OF BEEF SAMPLES

Replicate	Values	Treatment 10 Ml. NH_3 at +15°F. for 24 Hours					
		Control	Sample 1	Sample 2	Sample 3	Total	Mean
	L	26.0	28.3	26.9	26.7	107.9	26.97
I	a	+3.3	+5.0	+5.1	+4.3	17.7	4.42
	b	+5.0	+5.6	+5.3	+4.2	20.1	5.02
	L	25.4	28.2	28.6	28.3	110.5	27.62
II	a	+3.7	+4.7	+4.9	+5.3	18.6	4.65
	b	+5.0	+5.1	+4.5	+4.6	19.2	4.80
	L	25.7	27.3	27.9	26.0	106.9	26.72
III	a	+7.1	+4.6	+5.8	+2.1	19.6	4.90
	b	+6.4	+5.0	+5.0	+4.0	20.4	5.10

TABLE XXXX

HUNTER "L", "a", AND "b" VALUES OF PORK SAMPLES

Replicate	Values	Treatment 10 Ml. NH_3 at -20°F. for 24 Hours					
		Control	Sample 1	Sample 2	Sample 3	Total	Mean
I	L	38.4	50.7	43.3	38.7	171.10	42.77
	a	+5.4	+4.1	+6.3	+6.0	22.30	5.57
	b	+9.4	+9.4	+8.4	+8.5	35.70	8.92
II	L	37.3	39.0	43.0	48.0	167.30	41.82
	a	+4.6	+3.9	+4.1	+1.6	14.20	3.55
	b	+6.6	+7.6	+8.1	+9.2	31.50	7.87
III	L	27.8	39.3	31.1	35.7	133.90	33.47
	a	+2.6	+3.2	+3.1	+1.4	10.30	2.57
	b	+4.3	+5.7	+4.9	+5.5	20.40	5.10

TABLE XXXXI

HUNTER "L", "a", AND "b" VALUES OF PORK SAMPLES

Replicate	Values	Treatment 10 Ml. NH_3 at 0°F. for 24 Hours					
		Control	Sample 1	Sample 2	Sample 3	Total	Mean
I	L	38.4	40.7	39.7	35.8	154.60	38.65
	a	+5.9	+4.2	+7.1	+3.7	20.90	5.22
	b	+9.4	+6.9	+8.5	+6.5	31.30	7.82
II	L	37.3	37.8	38.2	43.9	157.20	39.30
	a	+4.6	+4.6	+3.7	+2.2	15.10	3.77
	b	+6.6	+6.6	+6.7	+6.3	26.20	6.55
III	L	27.8	32.0	38.0	30.9	128.70	32.17
	a	+2.6	+2.0	+2.9	+2.3	9.80	2.45
	b	+4.3	+4.5	+6.1	+5.1	20.00	5.00

TABLE XXXXII

HUNTER "L", "a" AND "b" VALUES OF PORK SAMPLES

Replicate	Values	Treatment 10 Ml. NH_3 at +15°F. for 24 Hours					
		Control	Sample 1	Sample 2	Sample 3	Total	Mean
I	L	38.4	36.8	46.5	41.4	163.10	40.77
	a	+5.9	+6.7	+4.0	+6.0	22.60	5.65
	b	+9.4	+6.5	+7.1	+7.6	30.60	7.65
II	L	37.3	47.5	38.0	46.5	169.30	42.32
	a	+4.6	+3.7	+2.1	+3.0	13.40	3.35
	b	+6.6	+9.6	+6.0	+9.8	32.00	4.00
III	L	27.8	32.4	42.6	30.4	133.20	33.30
	a	+2.6	+3.2	+5.0	+2.0	12.80	3.20
	b	+4.3	+6.4	+8.6	+4.4	23.70	5.92

VITA

The author was born April 24, 1933, in Birmingham, Alabama. He was graduated from West End High School, Birmingham, Alabama, in 1951. He was enrolled at Troy State College from 1951, to May, 1952. In June, 1952, he transferred to Auburn University where he received his B. S. degree in Agriculture in March, 1957. On April 1st of the same year he was employed by the Alabama State Health Department. On January 28, 1961, he was married to Miss Sara Kathryn Hardy. On September 18, 1964, the Alabama State Health Department made provisions for the author to study for a Master of Science Degree in Food Technology at the University of Tennessee. Since that time, he has been working to complete the requirements for the degree Master of Science.