Vibration Fault Detection for Steam Generator Tubing

Laura Simmons
Brad Black
John Chapman
Jared Jennings
Jacob Johnson
Brian Paul
Kyle Woods

April 22, 2010
Nuclear Engineering Department
The University of Tennessee

Abstract

The detection of flaws within steam generator tubing is an important part of safety in a nuclear plant as it could potentially lead to release of radioactive material if unchecked. The current test method for testing these tubes is expensive and time consuming; however, as sound has been used to detect flaws successfully in other applications, an alternative method for using acoustics and accelerometers to detect flaws is what has been explored in this project. Preliminary results of testing with a simple hollow steel tube have given promising results of detecting a hole as small as 7.66% of the tube diameter. Testing of a model steam generator with four tubes led showed promising results using a motor to vibrate the system.

Contents

Abstract 2
List of Figures 4
Introduction 5
The Steam Generator 5
Normal Operation Flaws 6
Eddy Current Testing of Tubing 8
Alternative NDE Design 11
Background 11
Acoustic Wave Dynamics 11
Vibrating the System 13
Accelerometers 14
Proposed Design Setup 17
Experimental Setup 20
Equipment 25
Data Acquisition 31
Results 32
Conclusions 34
Future Work 35
Appendix A: FFT Graphs from Straight Pipe Tests 36
Appendix B: FFT Graphs from Motor Tests on Steam Generator Model 37
FFT From Cut Tube 37
FFTs of Undamaged Tube 37
Appendix C: FFT Graphs from Speaker Tests on Steam Generator Model 39
FFT from Data Runs 1-5 of Undamaged Tube 39
FFT from Data Runs 1-5 of Cut Tube 40
Works Cited 43

List of Figures

Figure 1: Coolant Loops in a Nuclear Power Plant (1) 5
Figure 2: Diagram of Common Tube Flaws and Their Usual Locations in the Steam Generator (3) 7
Figure 3: Bar Graph of Steam Generator Units of Varying Material Types Based on Year. (3) 8
Figure 4: Eddy Current Strength Based on Penetration Depth (5) 9
Figure 5: The Diminishing Amplitude of a Sound Wave as it Travels Through a Medium. (10) 13
Figure 6: Basic Design for a Loudspeaker (12) 14
Figure 7: Basic Design of a Piezoelectric Accelerometer (13) 15
Figure 8: Frequency Response for a Vibration of Piezoelectric Material. (13) 16
Figure 9: Block Diagram of a Typical IEPE Accelerometer (13) 16
Figure 10: Elliptical Steel Casing of Accelerometer 18
Figure 11: Cut Tube (Left) with Model Steam Generator Tube (Right) 19
Figure 12: System in Contracted (Left) and Expanded Position (Right) 19
Figure 13: Side, Bottom, and Top View of Steel Accelerometer Casing 21
Figure 14: Accelerometer Placed in Casing Prior to Testing 21
Figure 15: Steel Spacer 22
Figure 16: Top and Side View of Cut Tube 23
Figure 17: Final Accelerometer Arrangement for Insertion into Model Steam Generator 24
Figure 18: Completed Prototype for Accelerometer System 25
Figure 19: Model Steam Generator 26
Figure 20: Underside of Steel Base Plate 26
Figure 21: Model Pipe Cross Section 27
Figure 22: Model Steam Generator 28
Figure 23: Accelerometer: Profile, Side, Top and Bottom Views 29
Figure 24: Damaged Pipes for Testing 30
Figure 25: Close View of Damage to Pipe 31
Figure 26: Unbalanced Motor 32
Figure 27: FFT of Accelerometer Data for Undamaged and Drilled Pipe 33
Figure 28: FFT of Accelerometer Data from Steam Generator Model. Undamaged Tube (Green) Cut Tube (Blue) 34

Introduction

The Steam Generator

Pressurized water reactors use steam generators to convert water into steam using heat produced in the reactor core as shown in Figure 1 (1).Hot water is pumped from the core through thousands of feet of tubing via 3,000 to 16,000 tubes in the steam generator measuring about three-quarters of an inch in diameter under high pressure to prevent it from boiling. The water pumped into the steam generator then heats a secondary water supply on the outside of the tubes without the transfer of any radioactivity that is present in the primary water from containment activation (2).The resulting steam created by the steam generator is then used to rotate a steam turbine which creates electricity (1). After this steam cools and condenses it is returned to the steam generator (2).

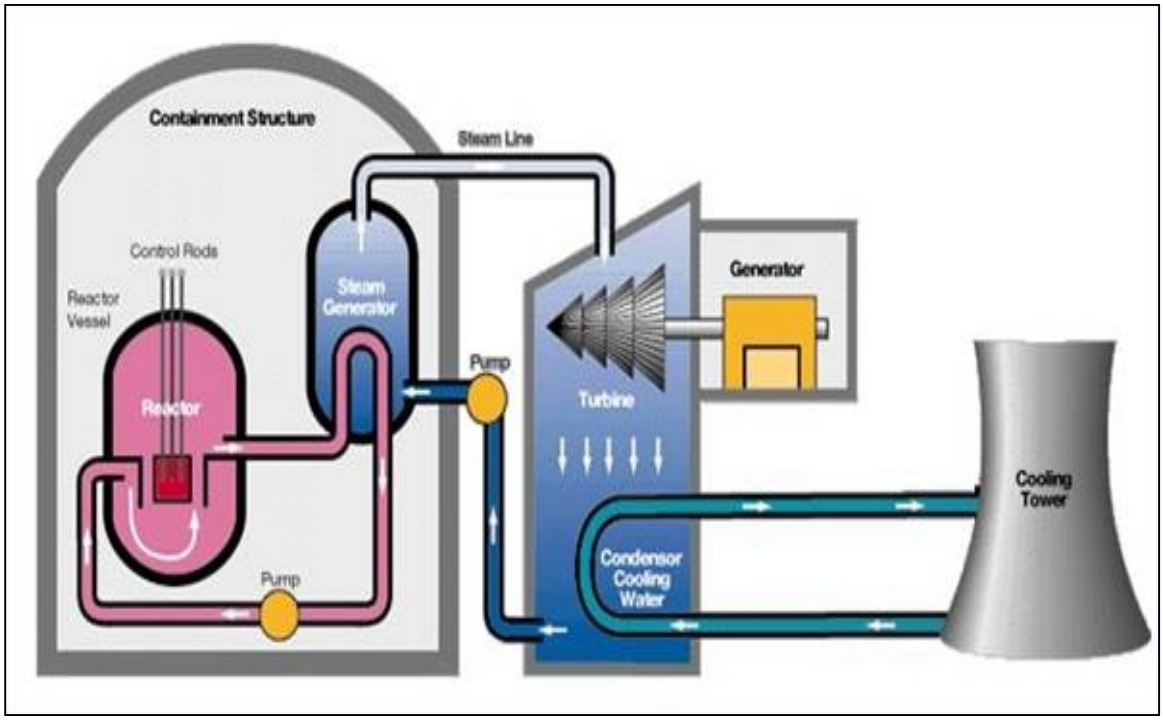

Figure 1: Coolant Loops in a Nuclear Power Plant (1)

Because it is one of the primary barriers between the radioactive and non-radioactive sides of the plant, leakage of water between the two loops in the steam generator is of great concern. The dilemma is that if a tube breaks during plant operation, the steam generated could become radioactive and be released into the atmosphere, so the NRC has regulations in place to prevent problems with steam generator tubes. These regulations require proof that if a rupture were to take place the radiation exposure to the public would remain within the offsite limits, in addition to emergency procedures that ensure quick response to detected operational leaks which may include shut down of the plant. During the service life of the each steam generator there are mandatory inspections of each tube for flaws that may not exceed certain limits. (2) There are a number of different flaw types checked for that may eventually develop into a site where leakage can occur. When a flaw is detected the tube in which it occurs is usually plugged. As plugging a tube lessens the output of the plant, at a certain percentage of plugged tubes, replacing the entire steam generator becomes more cost effective. (3)

Normal Operation Flaws

There are many flaws that have been encountered in steam generator tubes. Certain flaws seen in earlier generation steam generators have been reduced with improved water chemistry and newer materials, leaving the predominant cause of flaws to stress and corrosion, including inner granular attack (IGA), outer diameter stress corrosion cracking (ODSCC), and primary water stress corrosion cracking (PWSCC). While a complete list and description of each type is beyond the scope of this paper a graphic representation of the most common flaws is given in Figure 2. (3)

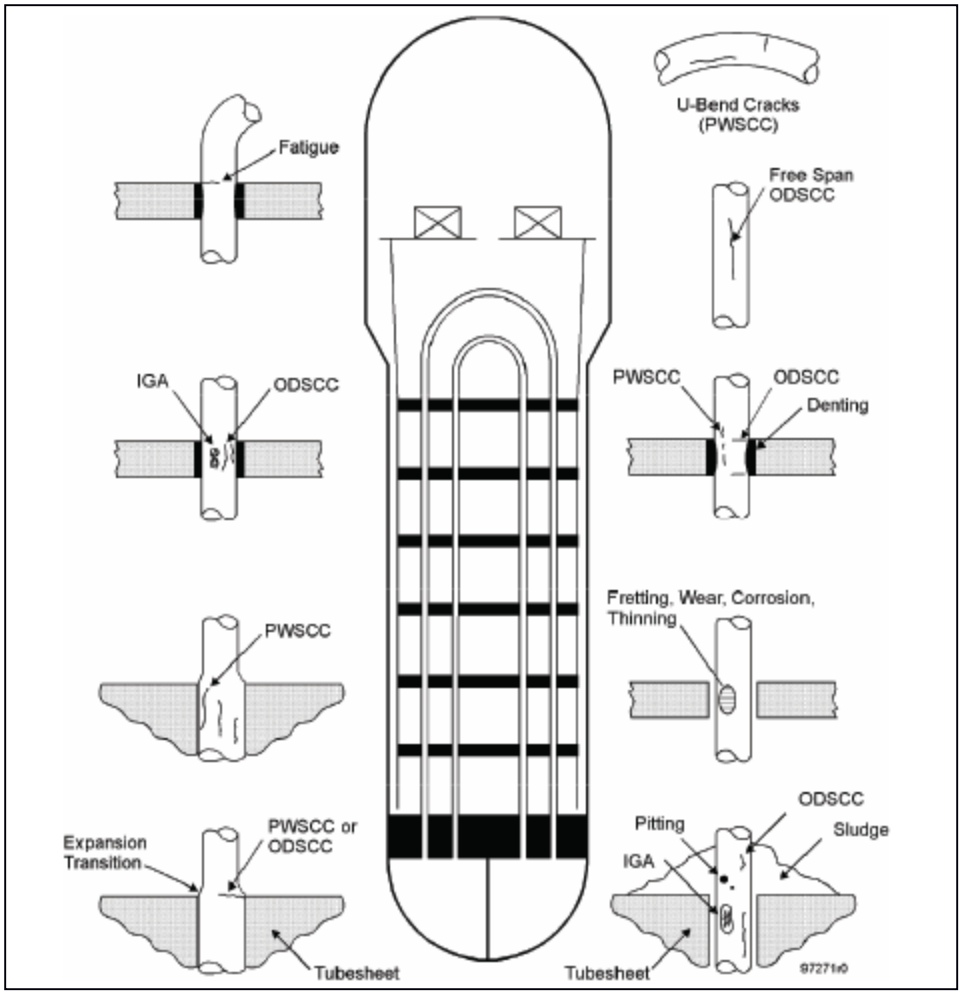

Figure 2: Diagram of Common Tube Flaws and Their Usual Locations in the Steam Generator (3)

As the materials of steam generator tubing have changed, the resistance to some of these flaws has improved with some of the newer models being allowed longer times between inspections (4). As shown in Figure 3 the materials used in today's steam generators are mainly Inconel-600 or 690 with differing heat treatments. The Inconel-600 mill annealed (MA) and heat treated mill annealed (HTMA) materials are used in older version steam generators with the thermal treated (TT) materials being used in the new generators. Because of the benefits of using these materials, older

steam generators as they reach their end of useful life are being replaced with steam generators made of TT materials. (3)

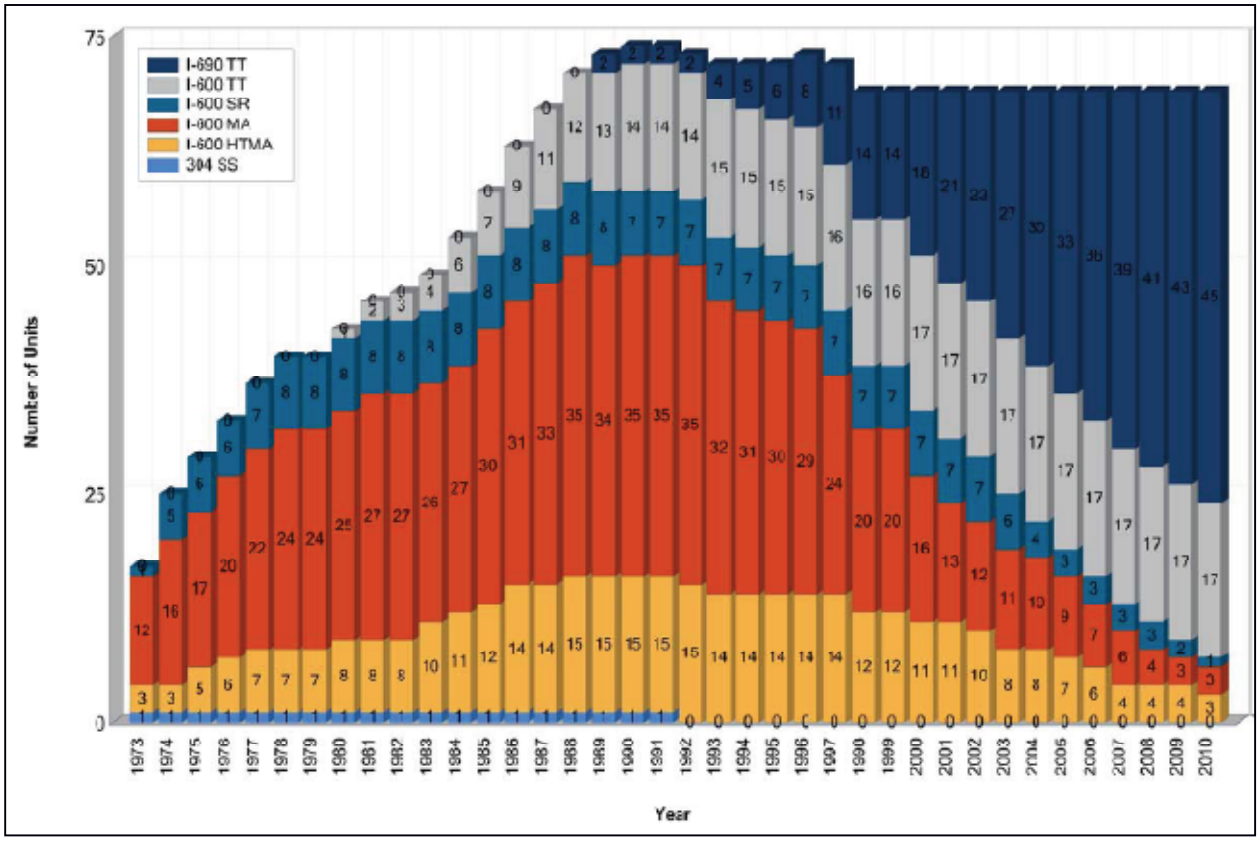

Figure 3: Bar Graph of Steam Generator Units of Varying Material Types Based on Year. (3)

Eddy Current Testing of Tubing

Eddy Current Testing (ECT) is the current industry standard for examining the tubes within a steam generator as it can detect most flaw types encountered in a steam generator. ECT operates on the basis of electromagnetic induction that produces eddy currents in a material adjacent to a magnetic field. By applying an alternating current (AC) to a coiled conductor region a magnetic region can be produced like shown in

Figure 4. The strength of the magnetic field increases with the magnitude of the alternating current applied with the strength of the eddy currents decreasing exponentially into the surface being tested. These eddy currents cause a secondary magnetic field which affects the impedance in the probes used. Flaws are detected when the impedance measured in the probe changes. (5)

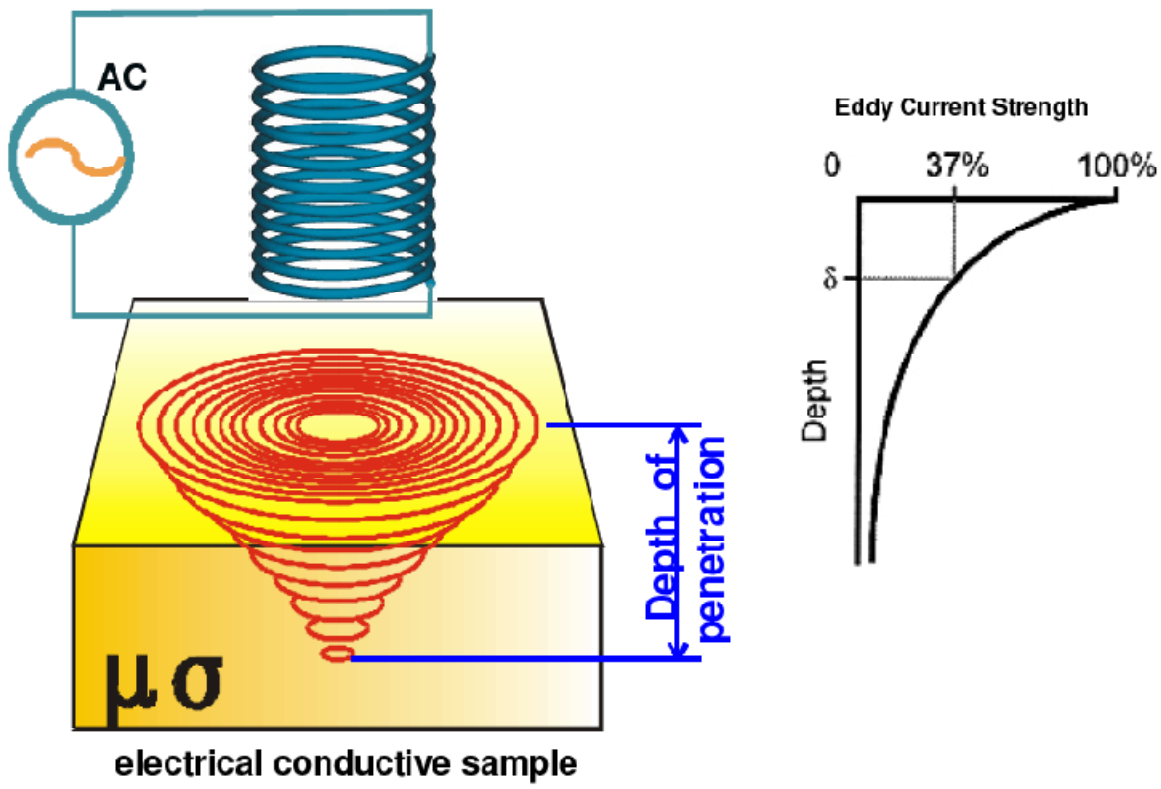

Figure 4: Eddy Current Strength Based on Penetration Depth (5)

When testing, a probe is inserted into each individual steam tube and driven remotely through the entire length of the steam tube and back. Usually due to the cost per probe, only one probe of a certain type is available to be used for all of the tubes. The regulations in place require a certain percentage of tubes to be tested with each type probe based on the record of the steam generator being tested as well as the

record for other steam generators of the same type. (4) As mentioned previously, ECT probes are available in a large variety of shapes and sizes, classified by operation and configuration of the coil. Some probe types normally used in steam generators include Bobbin probes, segmented Bobbin coil probes, 8 x 1 probes, rotating probes, and array probes. The Bobbin probes, designed to be inserted in hollow products like pipes, are ideal for steam tube inspection. For the Bobbin probe the coil is wrapped around the entire probe to maintain good contact with the pipe that is being investigated. (4)

Some of the disadvantages of ECT is that only conductive materials can be inspected, the inspector must have access to the surface that will be inspected, advanced training is required for inspectors using this method, the overall depth of penetration is limited, often flaws that are parallel to the probe coil may go undetected, and reference standards are needed for setup. In addition the cost associated with eddy current probes is extremely large, usually limiting the plant to have only one of a given type to test with. (4) This limits the number of tubes able to be tested at a time causing the measurement portion of the exam to be rather long. Additionally, as ECT is very sensitive to small cracks and other defects, it requires three teams to decide on the meaning of measurements taken. The three groups consist of two separate measurement analysis teams and a resolving team which attempts to reconcile the determinations of the previous two teams. (3) Combined, these issues cause the inspection of the steam generator to last days costing the plant in lost production time.

Alternative NDE Design

Background

Acoustic Wave Dynamics

Our testing method is based on time-varying vibrations in materials which are composed of atoms, which may be forced into oscillatory vibration about the equilibrium position. There are multiple patterns of vibratory motion at this level, but acoustics will be the most relevant. Acoustics involves forcing particles that contain multiple atoms to vibrate in unison which produce sounds waves. In solids, sound waves propagate in four principle modes based on the particles' oscillation. These four modes are longitudinal, shear, surface, and plate waves for thin materials; however, longitudinal and shear waves are the most common modes of sound wave propagation and longitudinal is the more dominant of the two. Longitudinal waves oscillate in the direction of propagation while shear waves oscillate perpendicular to the direction of propagation. While these modes are the more common occurring, at surfaces and interfaces other wave modes are possible due to the elliptical motion or complex vibrations of particles. One of these developed modes is surface waves (Rayleigh waves) that combine longitudinal and transverse shear waves. Rayleigh waves are useful due to their ability to detect surface flaws because they follow the surface around curves. (6)

A wave may be looked at as being composed of an infinite number of oscillating masses where each individual mass is influenced by its neighbor. Hooke's law helps address these oscillating masses by using the equation,$F = -kx$ where F is the force applied, k is the spring constant of the material, and x is the particle displacement distance. This force can be broken down to a mass multiplied by acceleration meaning

that for any given material the only true variables are acceleration and displacement since the spring constant and mass are constant in a given material. For different materials, the speed of sound will vary based on density, atom size, and various other material defined constants. The mass of a material can be related to the material's density while the spring constant is related to the elastic constants of the material. Therefore the relationship between sound velocity and a certain material is given by the equation, $V = \sqrt{\frac{C}{\rho}}$ where C is the elastic constant and ρ is the material's density. (7) The density of Inconel-690, a common steam generator tube material is 8.19 g/cm^3, and carbon steel, the material of the model steam generator, is 7.85 g/cm^3. The equation shows that the velocity of sound in a material is inversely related to square of the density, but since the values are similar, the difference in velocity between the model and an actual steam generator tube will be negligible. The elastic constant used depends on what wave type is of concern. The elastic constants are Young's Modulus and Poisson's Ratio for longitudinal waves and shear modulus for shear waves. For steel and Inconel-690 the elastic constants are even closer than their densities allowing the testing on the steel model to have comparable results. (8)

In hollow tubes, sound waves will create standing waves in the air column within the tube. Like a musical instrument the sound produced will change if the tube is lengthen or shortened. A similar effect is seen in vibrating strings; standing waves will form and create nodes and antinodes of vibration in the string. When a location on the string is held stationary the nodes and antinodes will reform in different places causing a change in the sound produced by the string. The changes in sounds are changes in the frequencies of the standing waves in the material. (9) The hollow tubes in a steam

generator should behave similar to both the hollow tube and the string, with the tube and the air column producing standing waves with measurable frequencies that will change when a flaw is introduced to the system.

The intensity of a sound wave diminishes as it travels through a medium due to scattering and absorption as the wave moves through most materials. Absorption is the conversion of sound energy to other energy forms where scattering is the reflection of the sound away from the direction of propagation. These two terms combined is known as attenuation, or the decay rate of a wave as it propagates through a material. A visual is provided below that better describes attenuation, decay of the wave amplitude over distance. (10)

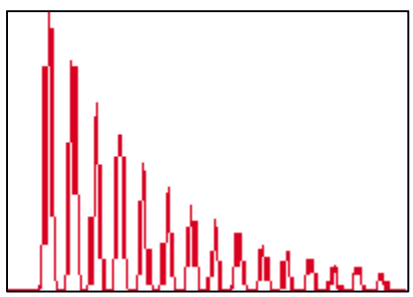

Figure 5: The Diminishing Amplitude of a Sound Wave as it Travels Through a Medium. (10)

A formula for calculating the amplitude after a certain distance is $A = A_o e^{-\alpha x}$ where A is the reduced amplitude after traveling a distance x. (10)

Vibrating the System

With the physical conditions of sound and vibrations discussed, there are two ways to introduce acoustics to the steam generator tubes. One possibility would include hitting the inside of the tubes; however, this method has the possibility to damage the tube itself. Furthermore, a continuous production of sound at the same frequency by

this method would be difficult. The second possibility is to drive the system by the addition of a speaker to the base plate, a much less destructive technique with the ability to increase the amplitude of the vibrations in order to overcome the physical problems mentioned in the previous section.

Speakers convert an electrical input into sound. Standard speakers consist of a cone-shaped diaphragm, or a thin flexible sheet, attached to a permanent magnet. The diaphragm is attached to a coil of wire, or voice coil, that is suspended within the magnetic field. Vibration occurs when a signal current in the suspended coil creates its own magnetic field that interacts with the permanent magnet (11). Below is a typical design of a loudspeaker.

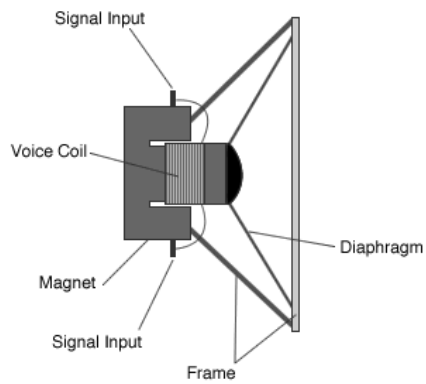

Figure 6: Basic Design for a Loudspeaker (12)

Accelerometers

While speakers are a viable option to produce vibrations through the steam generator tubes, such vibrations need to be analyzed in order to detect any defects within the tube material. One way to detect vibrations is by using accelerometers. Accelerometers are used to measure the linear acceleration of structures and vehicles.

In essence, they are sensing transducers that provide an output that is proportional to vibrations. Such accelerometers that measure vibrations utilize piezoelectric materials, which are capable of measuring a wide range of dynamic events (13).

Piezoelectric accelerometers are characterized by a region of flat frequency response range and a large linear amplitude range. Piezoelectric materials are also durable, which is necessary for vibratory environments. A piezoelectric accelerometer consists of a piezoelectric element, a preload spring, and a seismic mass attached to a base, as seen in Figure 7 (13).

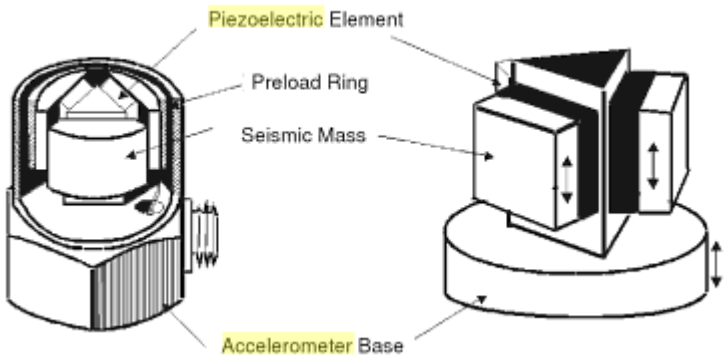

Figure 7: Basic Design of a Piezoelectric Accelerometer (13)

The piezoelectric element is analogous to a spring with a stiffness constant, *k*. The seismic mass, *m*, along with the applied acceleration, or vibrations, *a*, are the known parameters within the system. Using Newton's second law of motion, F=ma=-kx, the position of the piezoelectric material can be determined. Knowing the resonance frequency of the material, ω=sqrt(k/m), the frequency of the system can be calculated. Figure 8 below shows a typical response for a disturbance of the accelerometer (13).

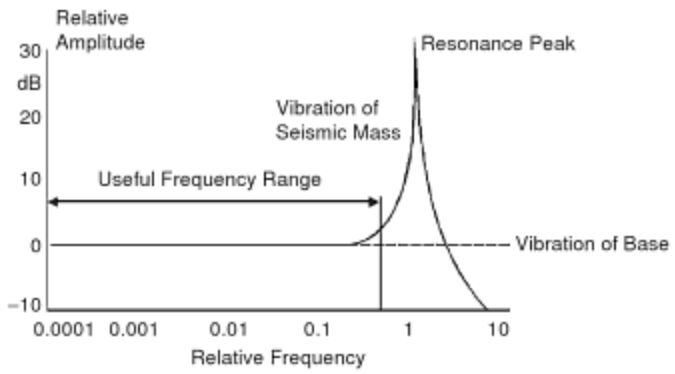

Figure 8: Frequency Response for a Vibration of Piezoelectric Material. (13)

The accelerometers used for vibration or shock applications are known as internal electronic piezoelectric (IEPE). The sensors for IEPE accelerometers contain built-in, signal-conditioning components. The components convert a high-impedance charge signal from the piezoelectric material to a usable, low-impedance voltage signal. The low-impedance signal is carried through a coaxial cable with little degradation to a signal analyzer. A block diagram of a typical IEPE accelerometer is shown below (13):

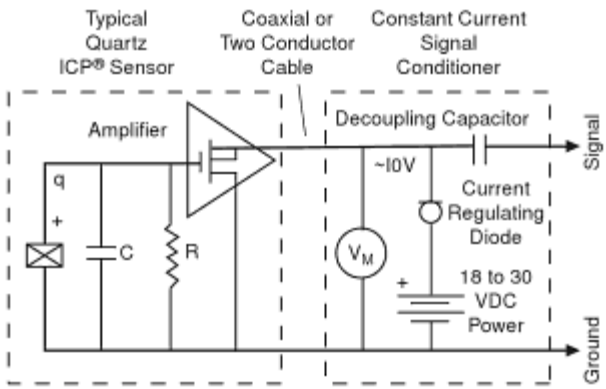

Figure 9: Block Diagram of a Typical IEPE Accelerometer (13)

The advantages of IEPE accelerometers are its simplicity, accuracy, broad frequency range, and low cost. These features make accelerometers a superior testing method as compared to standard microphones (13).

Proposed Design Setup

The theorized design for our project would involve an on-axis screw rotation with an elliptical casing piece (Figure 10). A thin piece of pipe would be cut down the middle separating the pipe into two halves and further shaping down the halves to form a small gap when the pieces were placed together (Figure 11). When oriented vertically, the arrangement would fit within the model steam generator tube with room adequate spacing on all sides to keep from damaging the pipe as it was placed, but when rotated 90 degrees it would separate the cut tubing pieces to fit perfectly within the model steam generator tube, coupling the accelerometer to the tube (Figure 12).

This design is also viable for the speaker portion of the setup as well. A speaker mounted at the base of this design would be coupled to the tubes above the tube sheet with the vibrations moving from the speaker up the cut tubes and into the steam generator. It would also be possible to place a small motor, like one used to produce vibrations in common hand held gaming system controllers, in the design.

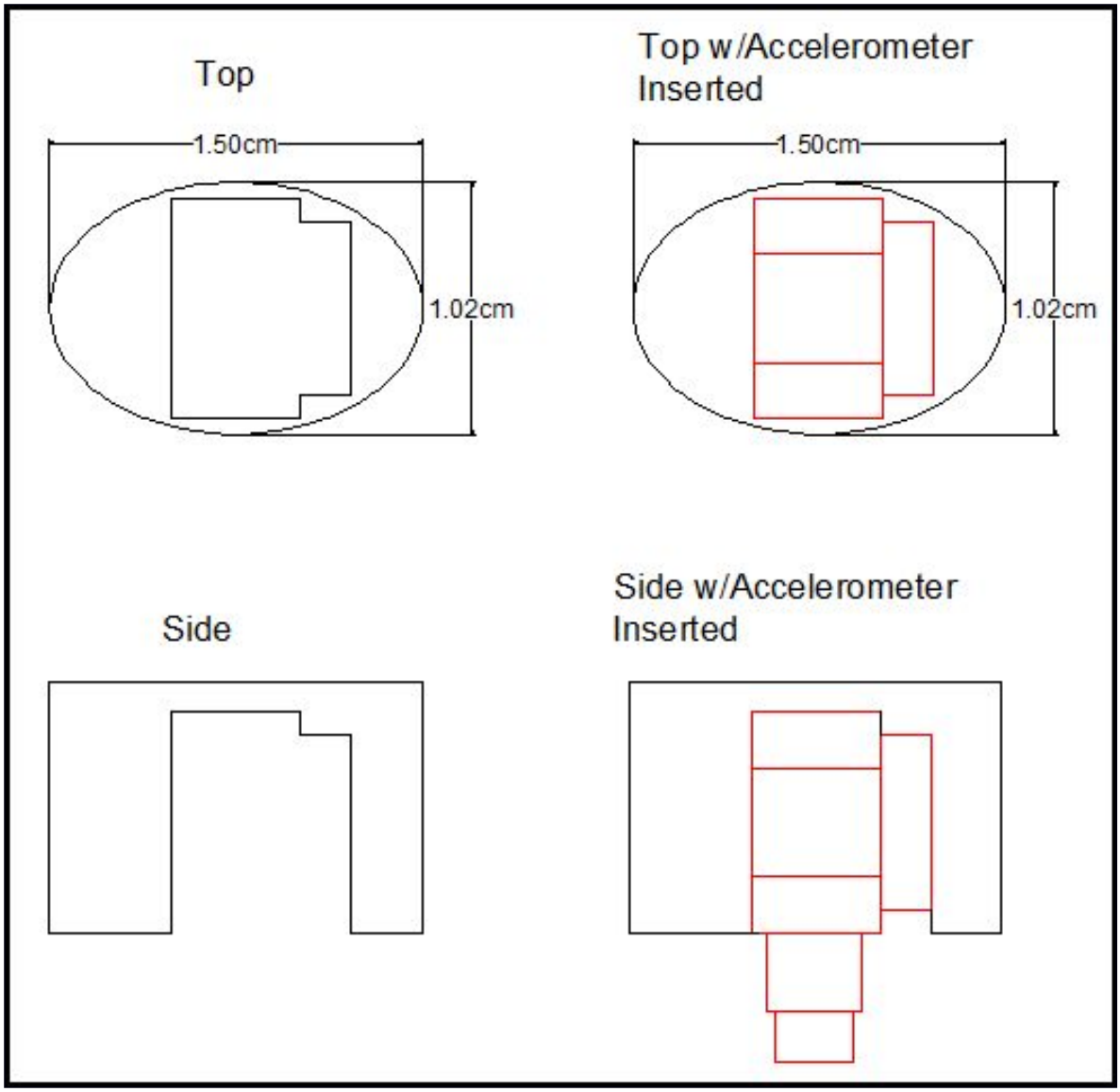

Figure 10: Elliptical Steel Casing of Accelerometer

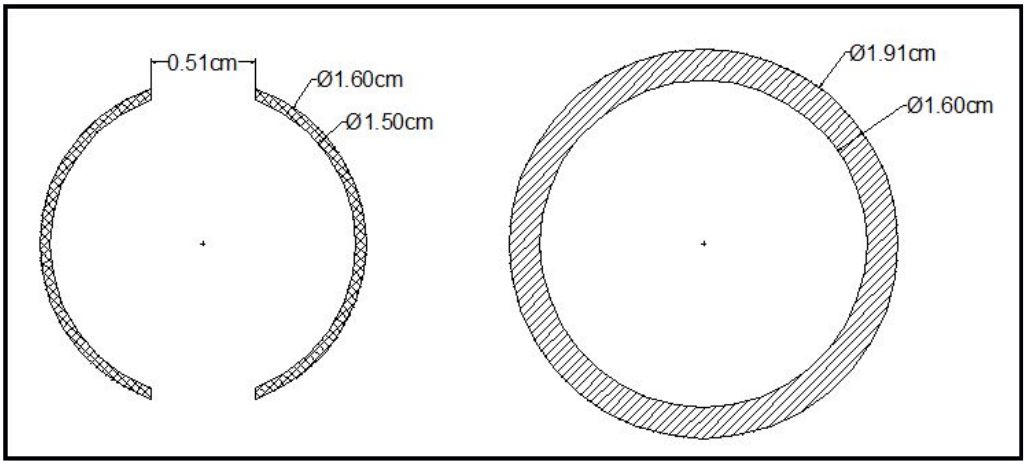

Figure 11: Cut Tube (Left) with Model Steam Generator Tube (Right)

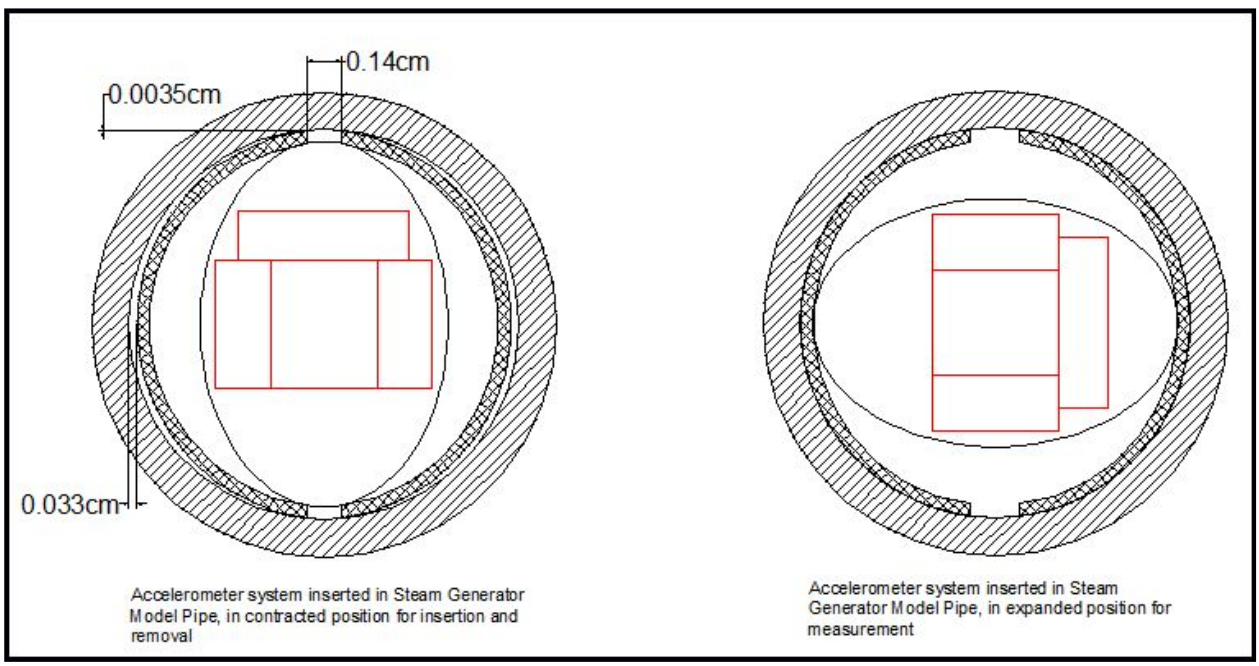

Figure 12: System in Contracted (Left) and Expanded Position (Right)

This design was unable to be made for testing due to our limited time and ability to machine it properly; however, this design served as the inspiration for the design shown previously is described below.

Experimental Setup

For the actual testing of the steam generator model it was necessary to design a simpler, easier to machine model that would confirm the basic principle behind the original design. While our group designed and machined a similar yet simpler design for the accelerometer, the simpler speaker designs were similar enough between most of the groups to have one built as a common resource for those groups. The accelerometer design constructed involved placing the accelerometer in a steel casing, seen in Figure 13. The casing was a small cylinder that had two holes bored completely through, one centered (this hole was cut smooth) and one purposefully 0.18” off axis (this hole was scored so that a screw could fit securely in). The top surface was then bored out such that the accelerometer would fit securely within, with its top perfectly level with the top of the casing piece. The actual casing can be seen with the accelerometer placed inside in Figure 14.

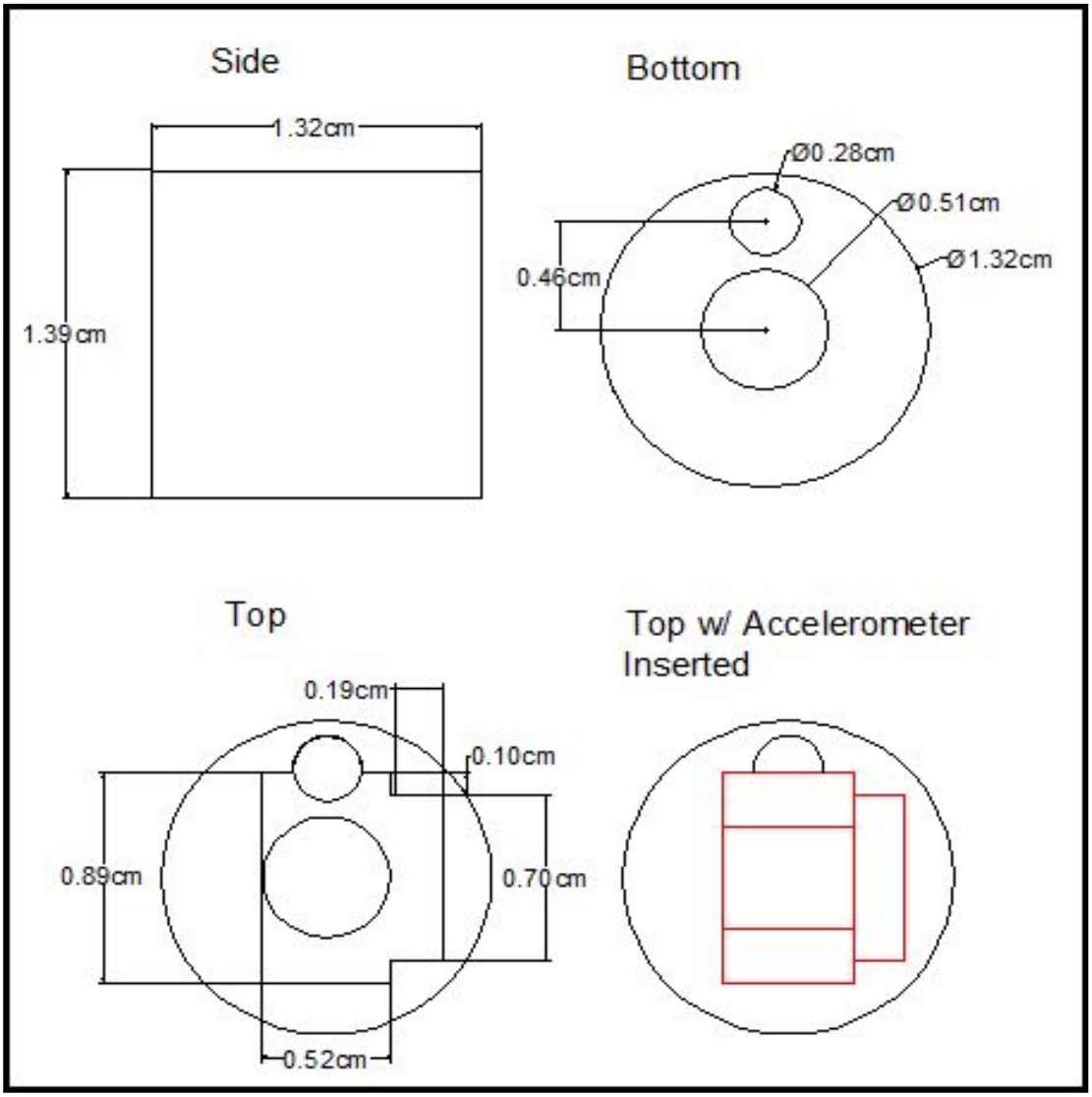

Figure 13: Side, Bottom, and Top View of Steel Accelerometer Casing

Figure 14: Accelerometer Placed in Casing Prior to Testing

This casing was placed above a steel spacer, shown in Figure 15. It was a cylinder identical to that of the casing piece before being cut to fit the accelerometer; it was of the same outer dimensions and had two holes identical to those cut in the casing piece. For the spacer, the steel between these holes was removed.

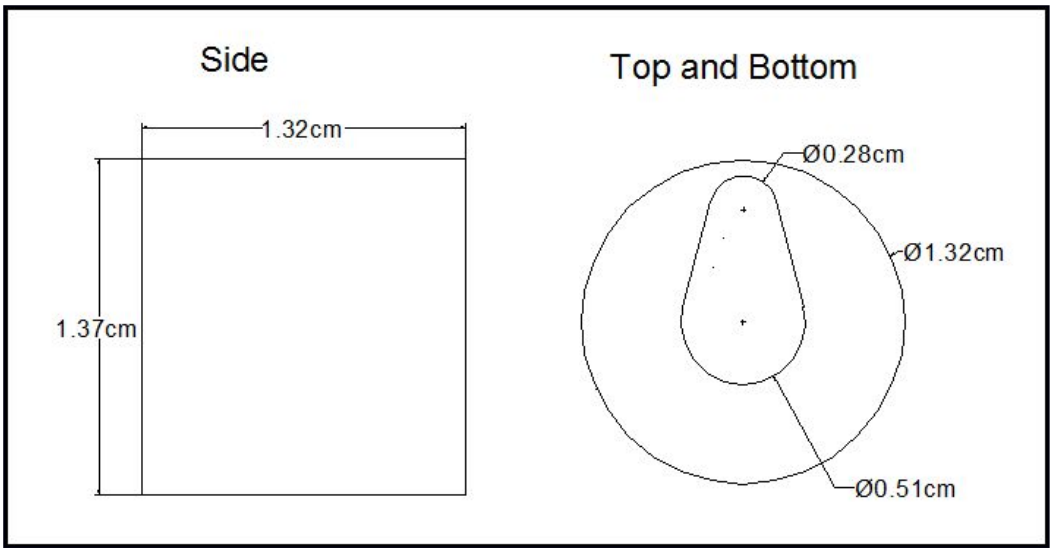

Figure 15: Steel Spacer

Next, a 5 inch piece of steel piping had a small slit cut down through approximately 4.2 inch of it. The bottom of this pipe was welded to a thin steel plate for stability's sake. This can be seen (without the steel plate) in Figure 16

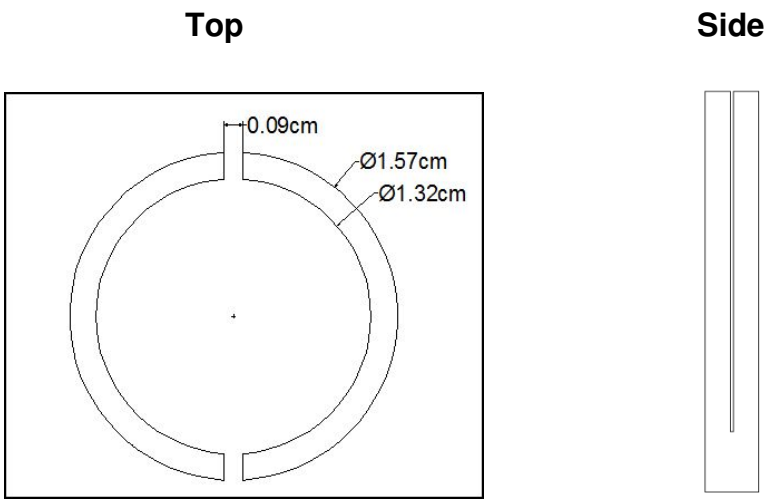

Figure 16: Top and Side View of Cut Tube

The casing piece with accelerometer inserted was placed above the spacer piece, and a long narrow screw was secured into the smaller hole of the casing piece (though not so high as to come into contact with the accelerometer. This long screw extended down out of the bottom of the cut tube and through a hole in the stability plate. Attached at the bottom of the screw was a large washer secured tightly to the screw. This was done so that by turning the screw (using the large washer for leverage) it would turn the casing and spacer pieces in an off-axis manner so as to expand the cut pipe until it came into contact with the inner walls of the model steam generator pipe. Once it was turned enough so that full contact could be made, measurements were taken. This arrangement can be seen in Figure 17 and 18, with the screw and washer shown in blue in the computer model.

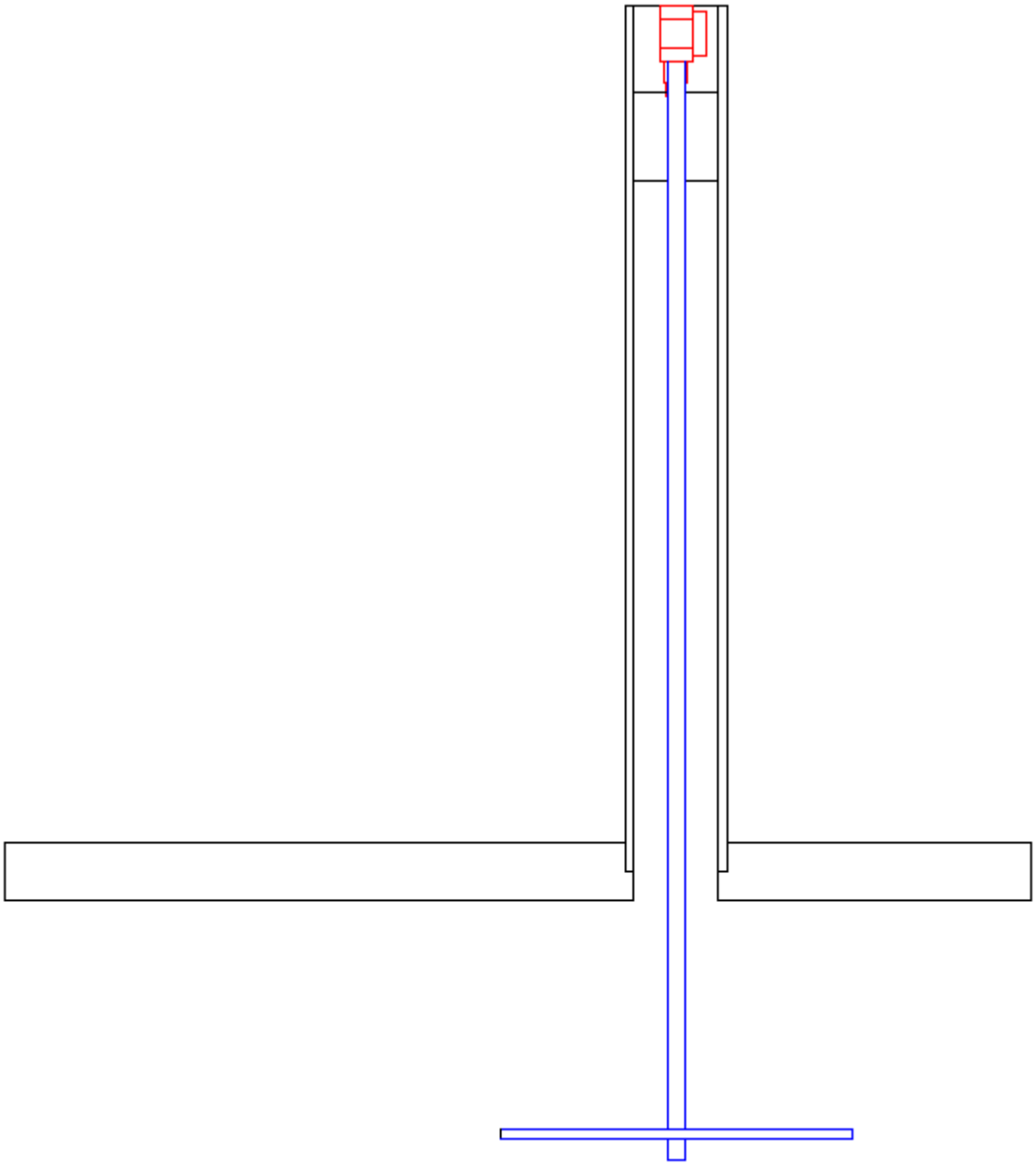

Figure 17: Final Accelerometer Arrangement for Insertion into Model Steam Generator

Figure 18: Completed Prototype for Accelerometer System.

Equipment

At the beginning of the project two long steel pipes and one long Inconel pipe were used for testing the basic idea behind our project using an accelerometer and speaker attached to either side of one of the pipes.

Later a model steam generator was constructed for more realistic testing. This model steam generator consisted of four long tubes that each had a semicircular bend and attached at either end to a steel base plate. The dimensions of the model can be seen in Figure 19 below, and the underside of the base plate can be seen in Figure 20.

A cross section of an individual pipe from the model steam generator can be seen in Figure 21. A picture of the model steam generator can be seen in Figure 22.

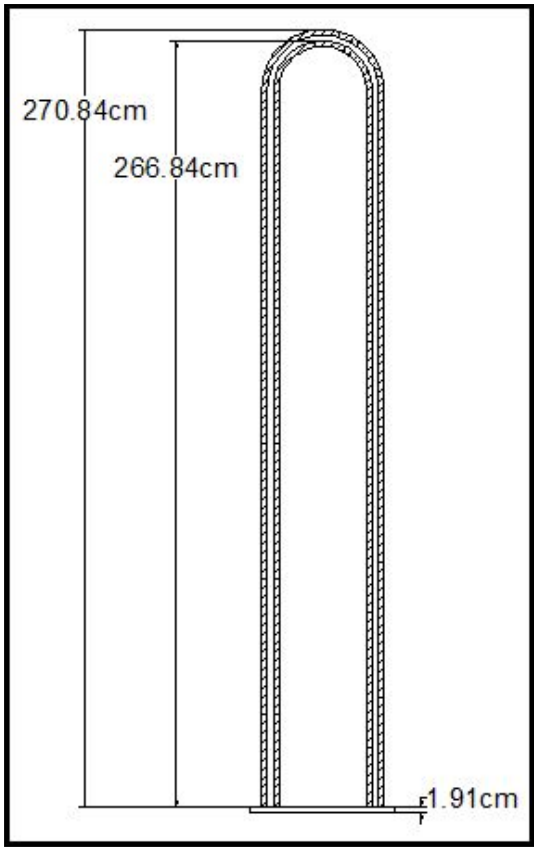

Figure 19: Model Steam Generator

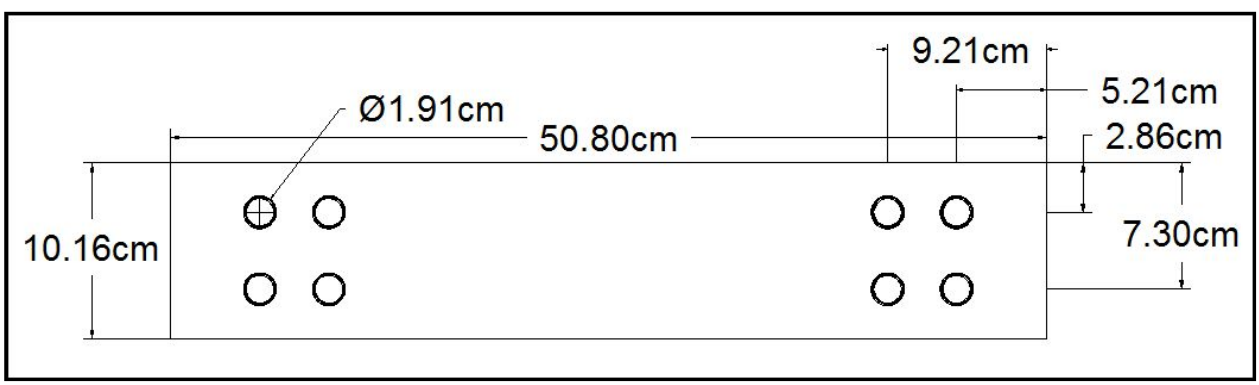

Figure 20: Underside of Steel Base Plate

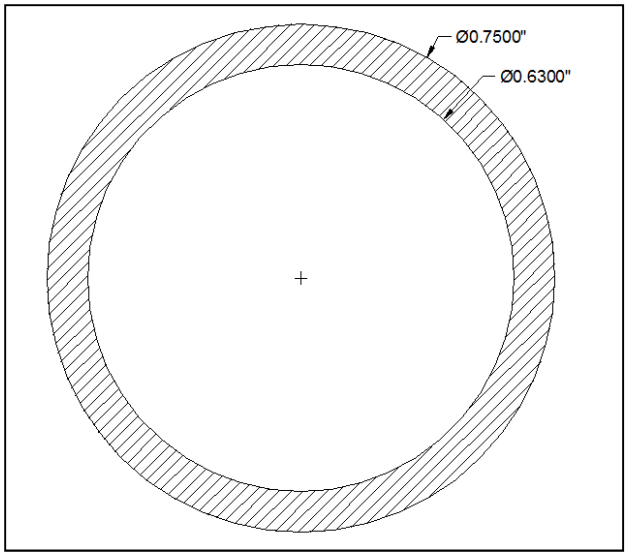

Figure 21: Model Pipe Cross Section

Figure 22: Model Steam Generator

The accelerometer was made by PCB Piezotronics Inc, Model A352 C65 SN 120799. Its dimensions can be seen in Figure 22. It should be noted that in all of the following figures that the accelerometer is indicated in red. Also to be noted is that the piezoelectric surface of the accelerometer is the cylindrical protrusion best visible in the Profile angle view.

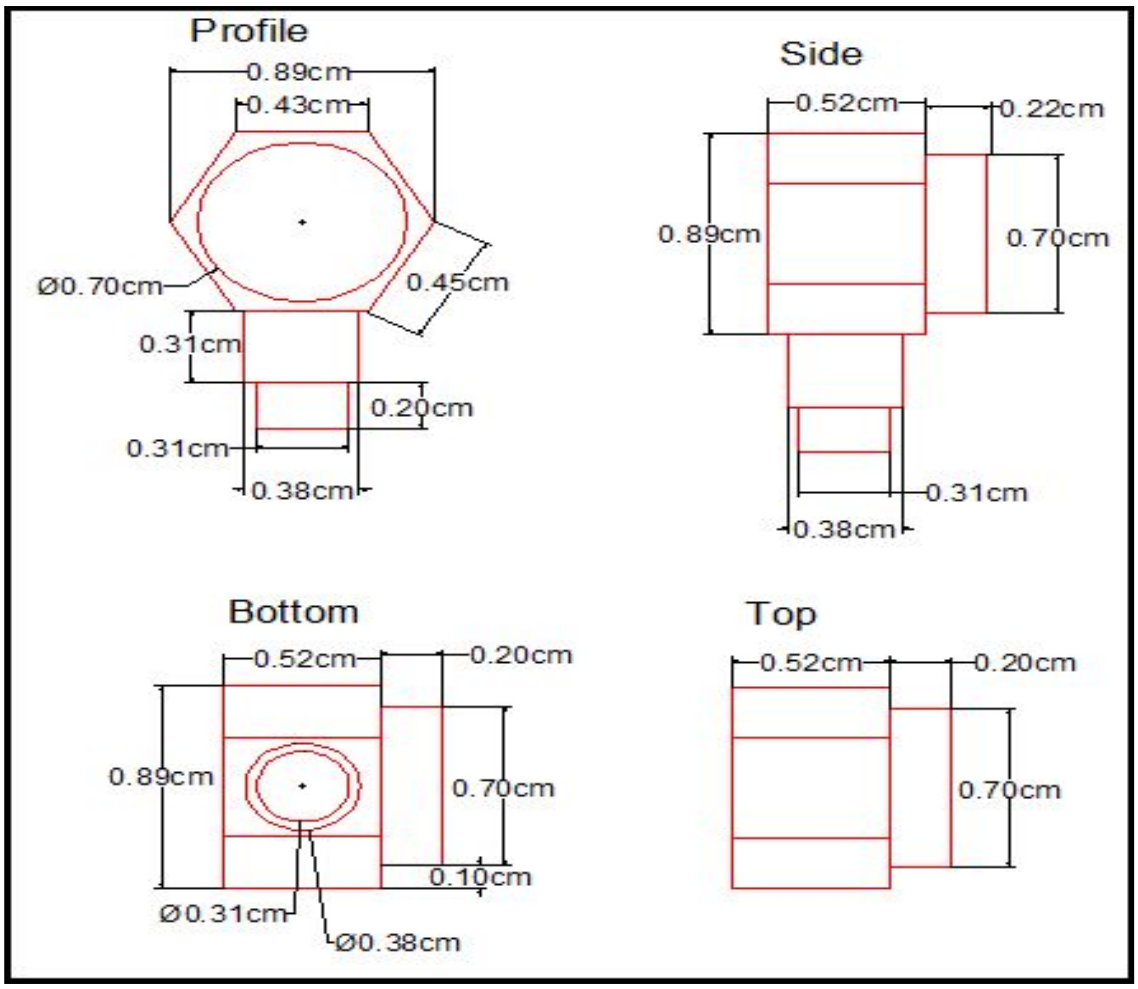

Figure 23: Accelerometer: Profile, Side, Top and Bottom Views

For the testing of the steam generator model a 1.905cm (0.75 inch) slit was cut into two of tubes while the other two tubes were left undamaged (Figures 24 and 25).

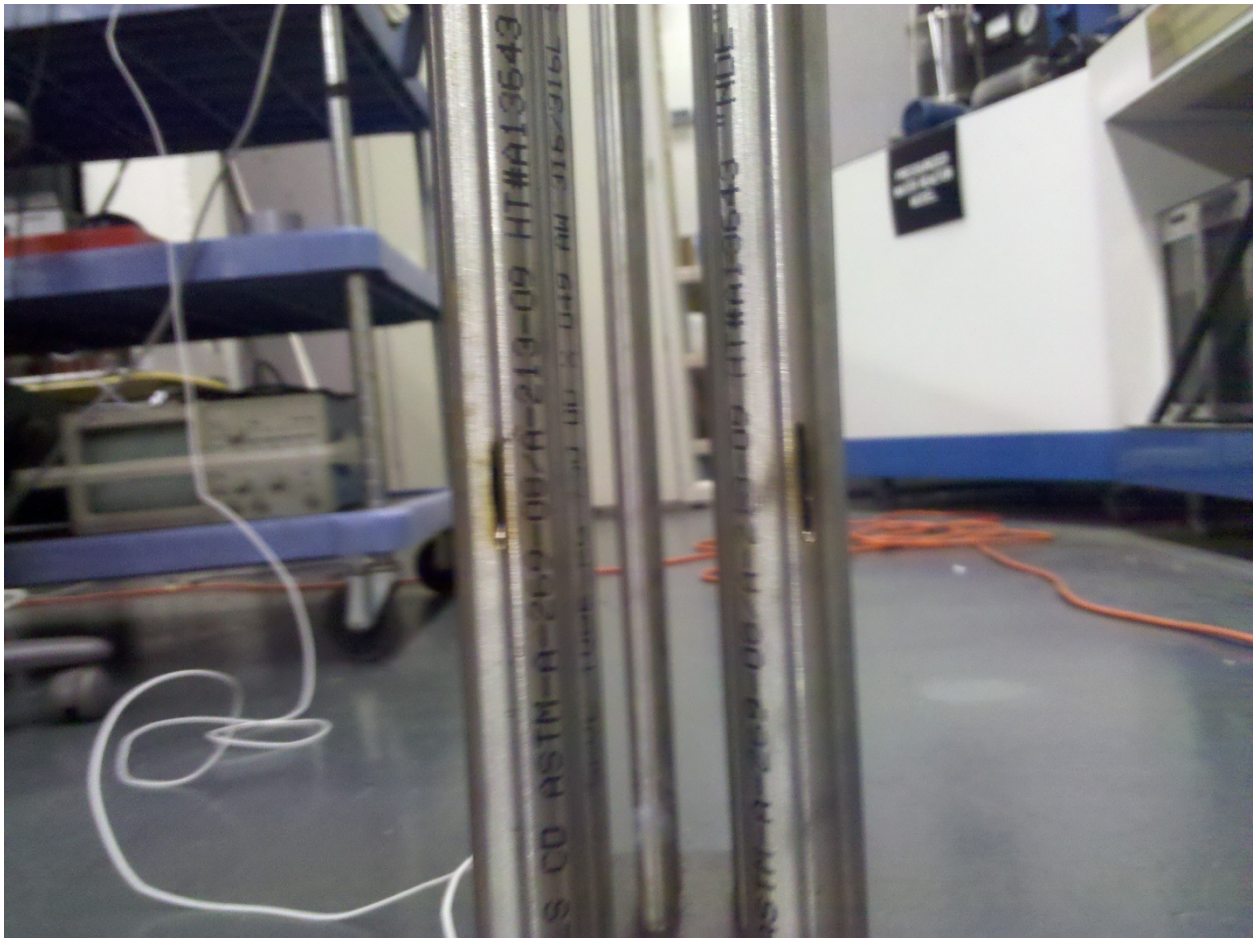

Figure 24: Damaged Pipes for Testing

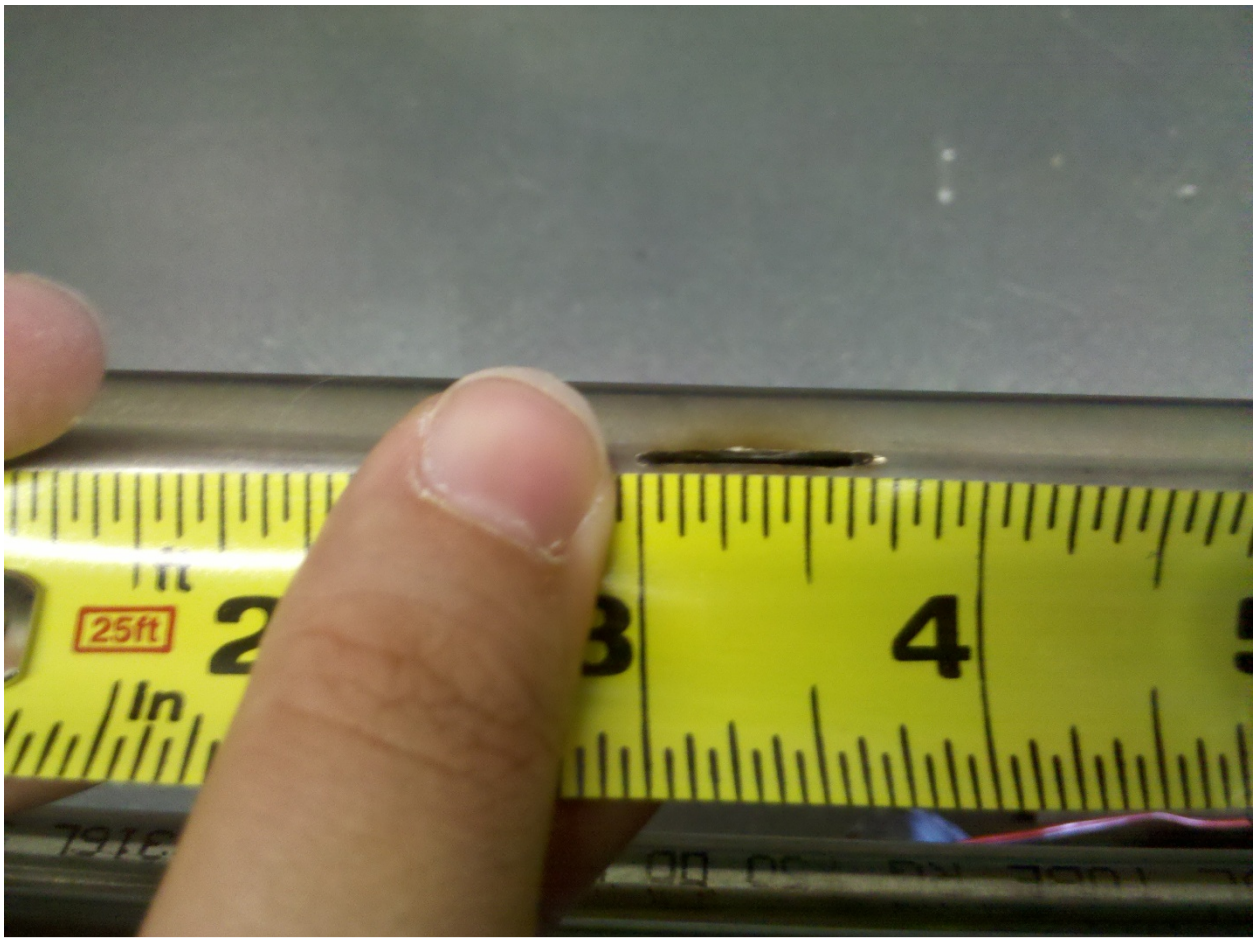

Figure 25: Close View of Damage to Pipe

Data Acquisition

The accelerometer data were recorded on a lab computer using Labview via a data acquisition card*. The data was analyzed using Matlab** which converted the data using a fast Fourier transform (FFT) to the frequency domain and graphed them with respect to frequency.

For the tests using the plain steel pipe a waveform generator was used to determine at which frequency the speaker should be run in order to pick up the best signal with the accelerometer. After a baseline sample was taken from the undamaged pipe additional data runs were taken after drilling a progressively bigger hole in the pipe.

After initial testing on the straight steel pipes, testing on the steam generator model was done both using a waveform generator, audio amplifier, and speaker system and using a motor to cause vibrations in the steam generator model. For the test using the motor, a small off balanced motor, Figure 26, was coupled to pipe being measured.

Figure 26: Unbalanced Motor

Results

The FFT and PSD plots between the pipe with no damage and those with the smallest hole show a marked difference in FFT magnitude (Figure 21). The PSD showed an even larger difference (Figure 22) with subsequently larger holes having similar amplitudes to the smallest hole. Not only do the magnitudes of the major peaks change, but some smaller peaks appear in the FFT graph between the frequencies of 50 and 150Hz after the hole was drilled. The subsequent holes produced graphs similar to the graph of the initial drilled hole. This is most likely due to the fundamental frequency and harmonics of a pipe depending on length. The initial hole caused the harmonic frequencies to change by changing where nodes and antinodes could form. By making the initial hole larger, the node locations remained intact and no new frequencies were introduced.

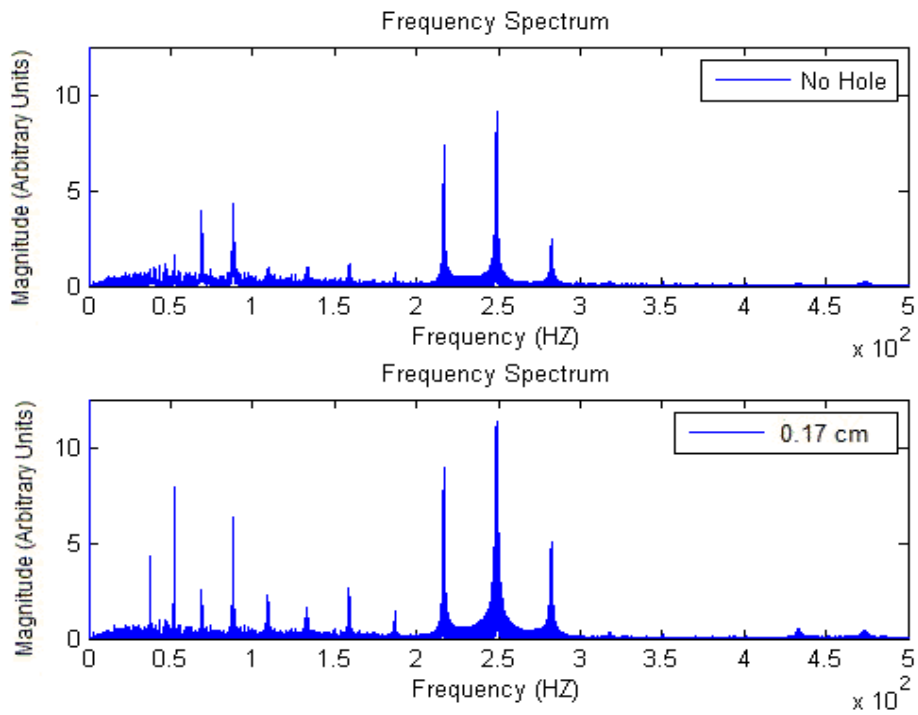

Figure 27: FFT of Accelerometer Data for Undamaged and Drilled Pipe

The testing done on the steam generator model using the motor had the most evident change between the slit and undamaged tube on the FFT plot. The magnitude and peak location change drastically as seen in Figure 23.

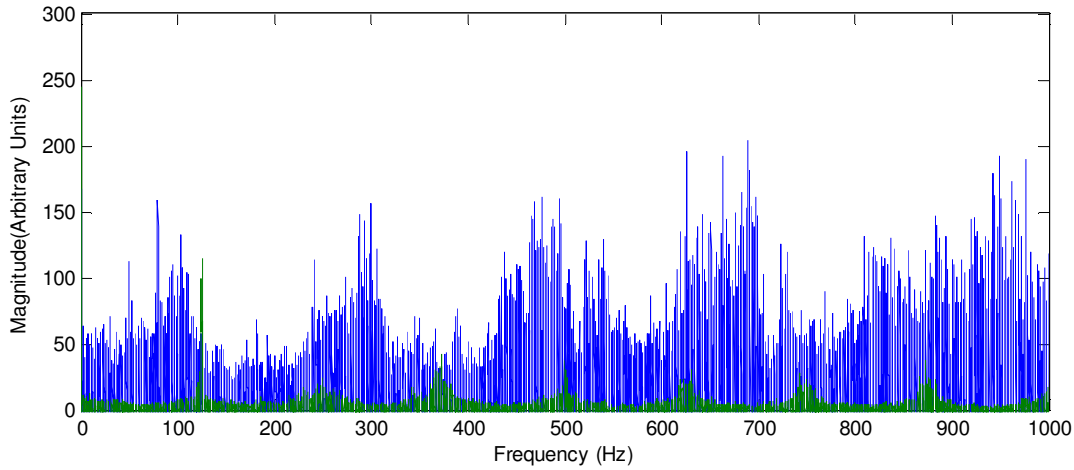

Figure 28: FFT of Accelerometer Data from Steam Generator Model. Undamaged Tube (Green) Cut Tube (Blue)

The last test performed on the steam generator model using the audio setup was inconclusive. While there are definite differences between the FFT plots of the undamaged and slit pipes, the plots are unusual showing peaks with no width or no peaks at all (Appendix C). This could indicate an incorrect frequency used to vibrate the system, insufficient amplitude coming from the amplifier to vibrate the entire system, or some sort of user error while performing the test.

Conclusions

Acoustic testing of steam generator pipes could potentially be a viable solution to testing steam generator tubes; however much work still needs to be done. A flaw of 7.66% of the diameter in size was easily detected in a straight section of pipe showing that it is at least possible to detect a flaw using a simple speaker and accelerometer setup. The results using the motor vibrate the steam generator model seem even more promising, showing a definite difference between the undamaged and slit tubes. The

results from the speaker tests on the steam generator model were inconclusive, possibly cause by the speakers inability to vibrate the entire system without extra power from the amplifier. Due to the ease at which the motor vibrated the entire system compared to the speaker setup, exciting the system with a motor was determined to be the better method.

Future Work

The testing done in this project was mainly preliminary in nature, and for a viable alternative to current methods more testing needs to be done. Testing with a model to scale would be the next step followed by tests including the presence of secondary water surrounding the tubes. If the method is still viable under those conditions testing of various flaw types will be necessary to determine if the setup is as versatile as ECT testing.

Appendix A: FFT Graphs from Straight Pipe Tests

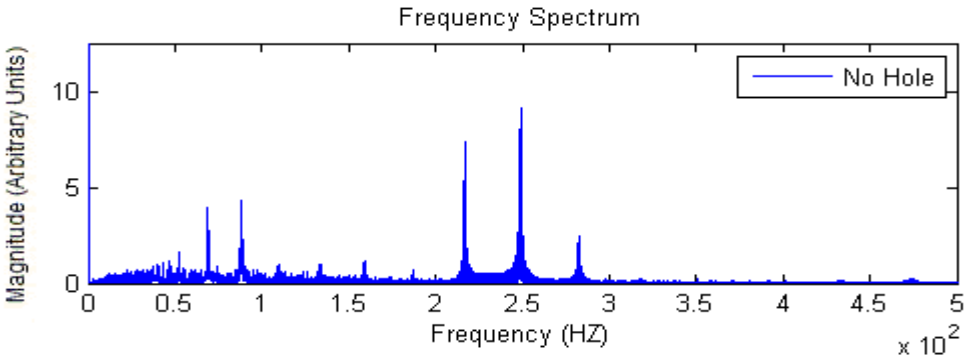

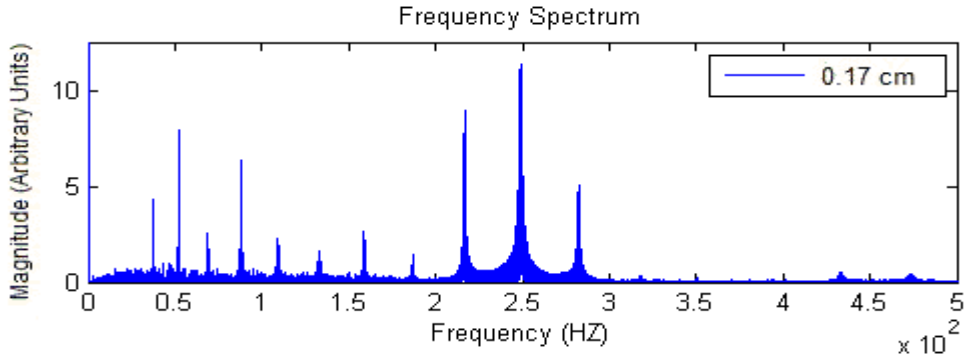

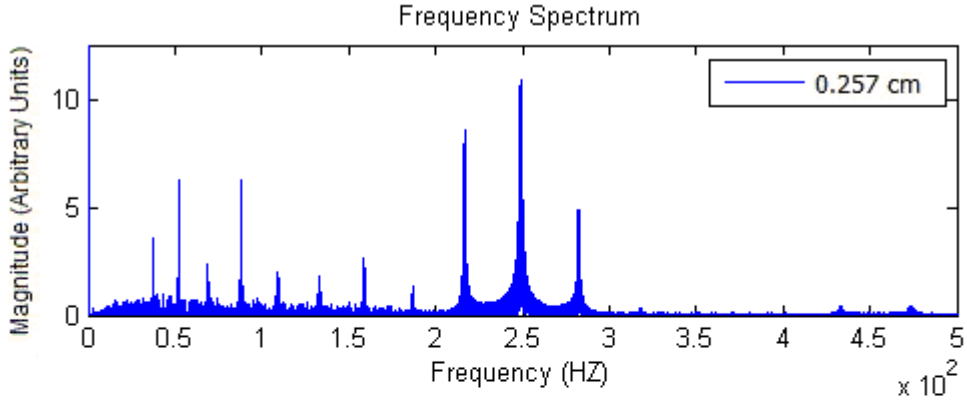

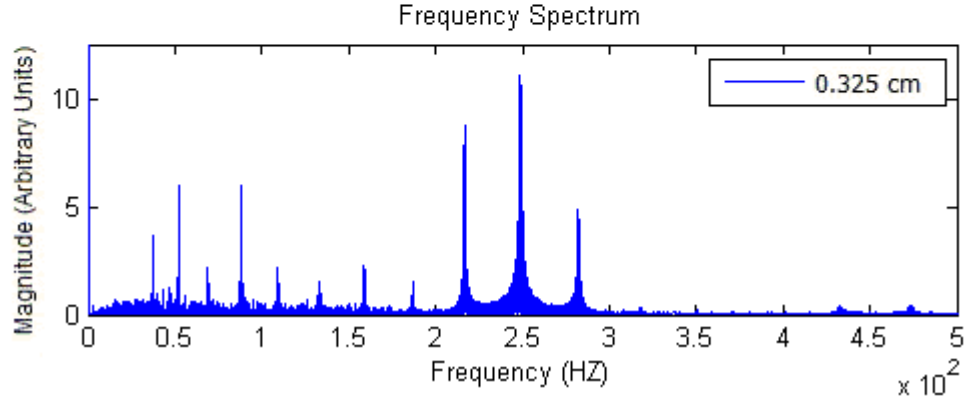

Appendix B: FFT Graphs from Motor Tests on Steam Generator Model

FFT From Cut Tube

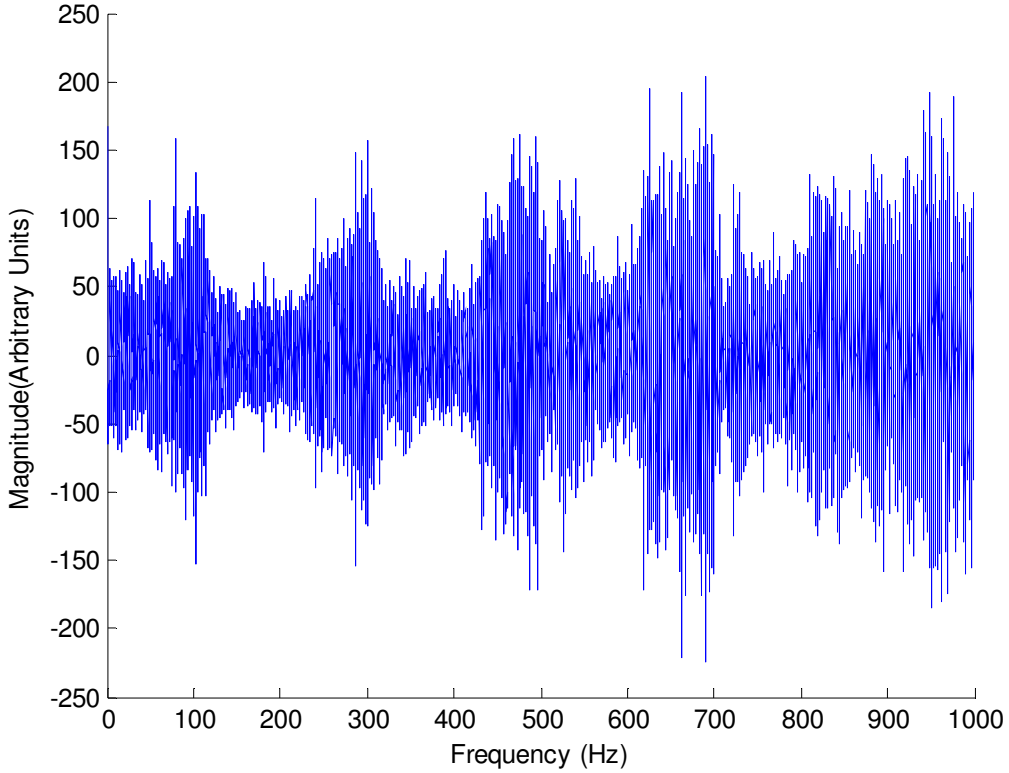

FFTs of Undamaged Tube

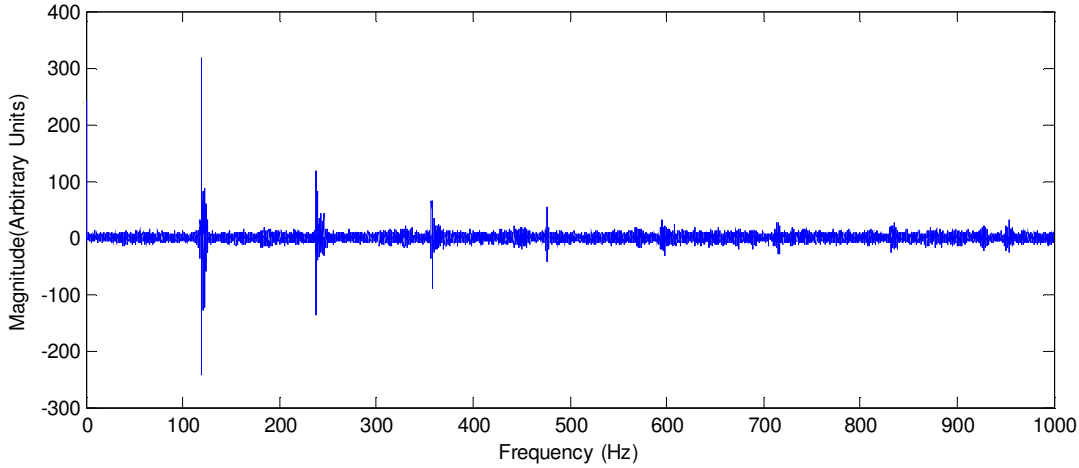

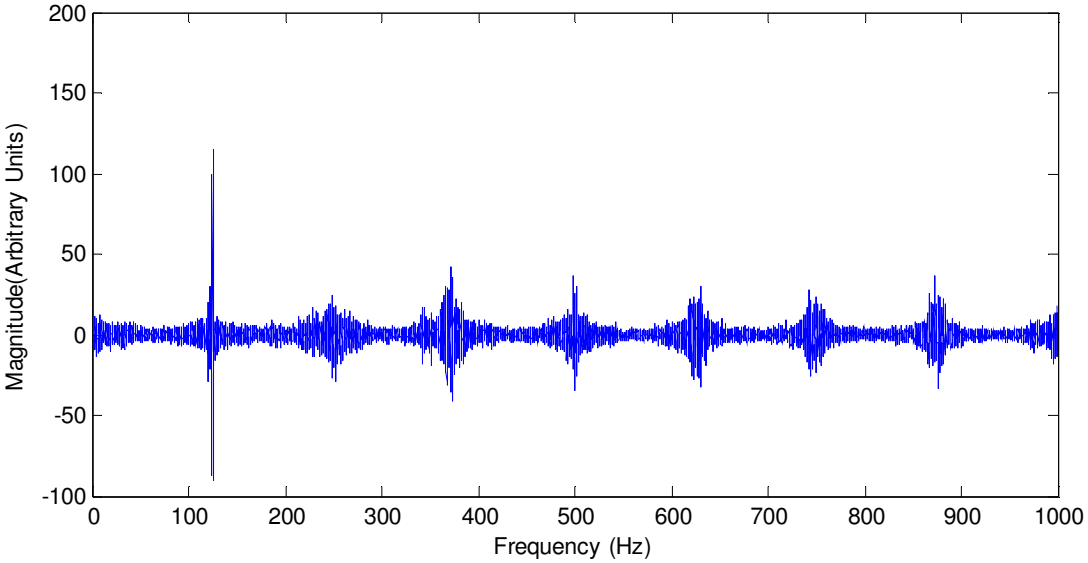
200
150
100
50
0
-50
-100
Magnitude(Arbitrary Units)
0
100
200
300
400
500
600
700
800
900
1000
Frequency (Hz)

Appendix C: FFT Graphs from Speaker Tests on Steam Generator Model

FFT from Data Runs 1-5 of Undamaged Tube

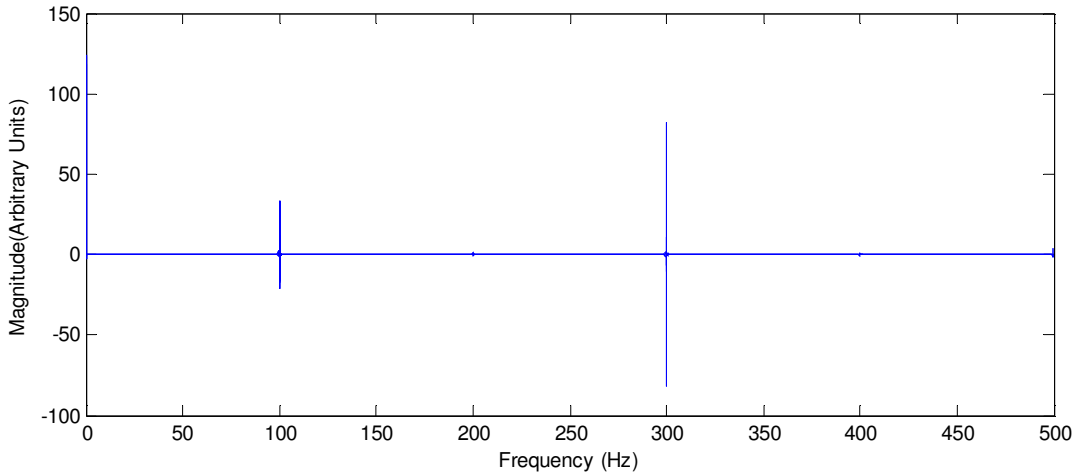

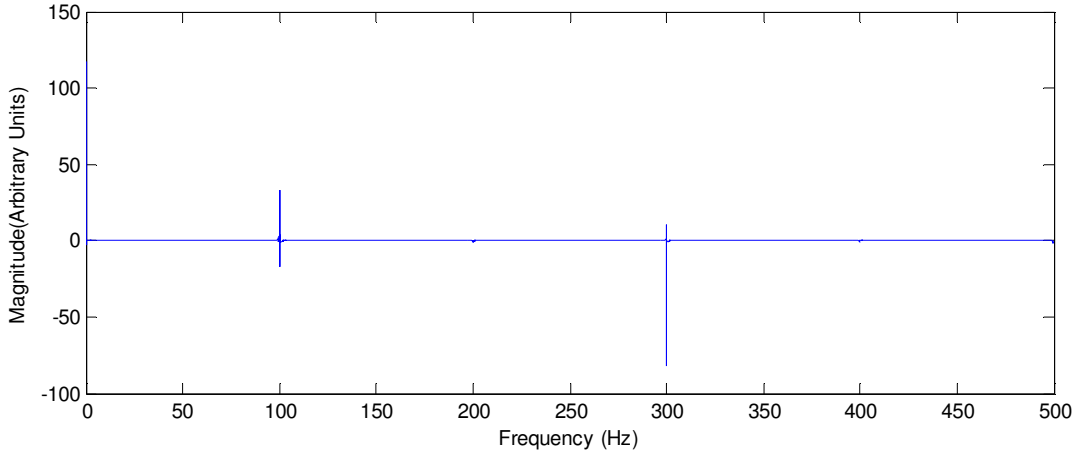

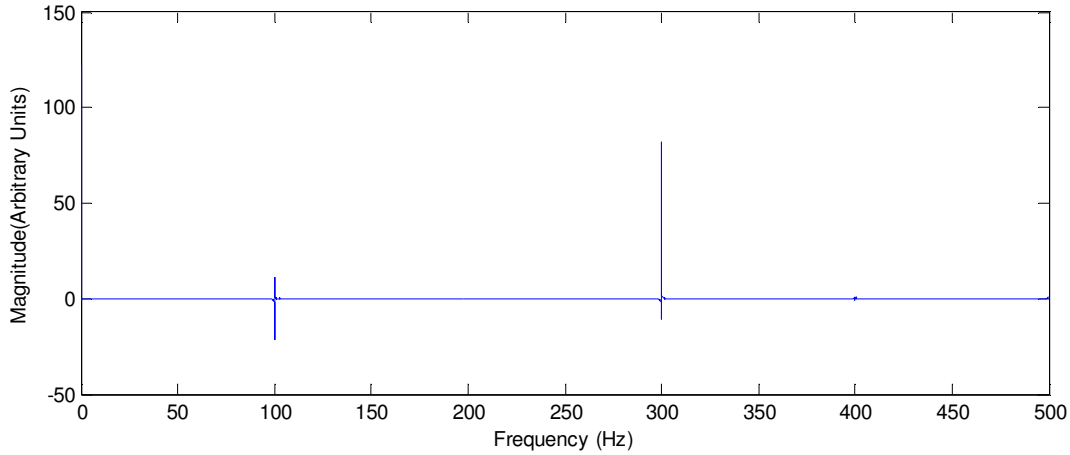

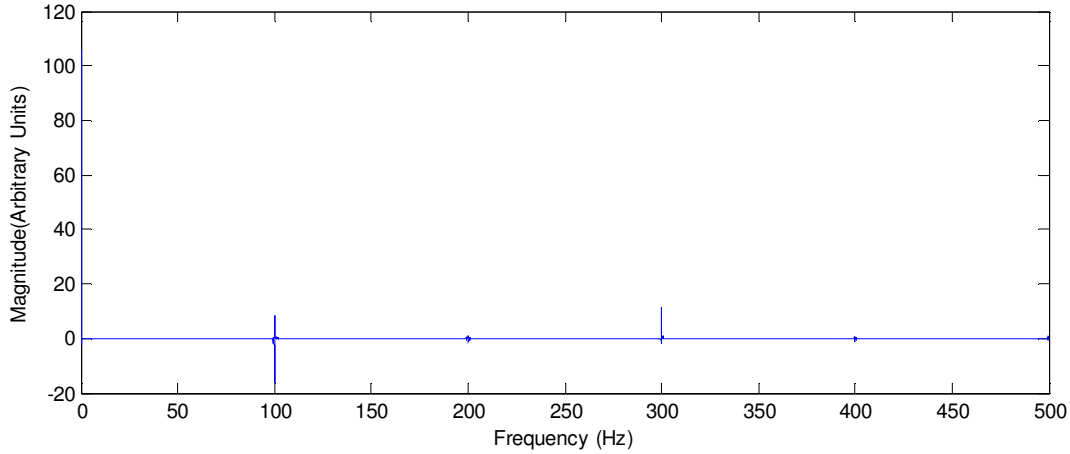

FFT from Data Runs 1-5 of Cut Tube

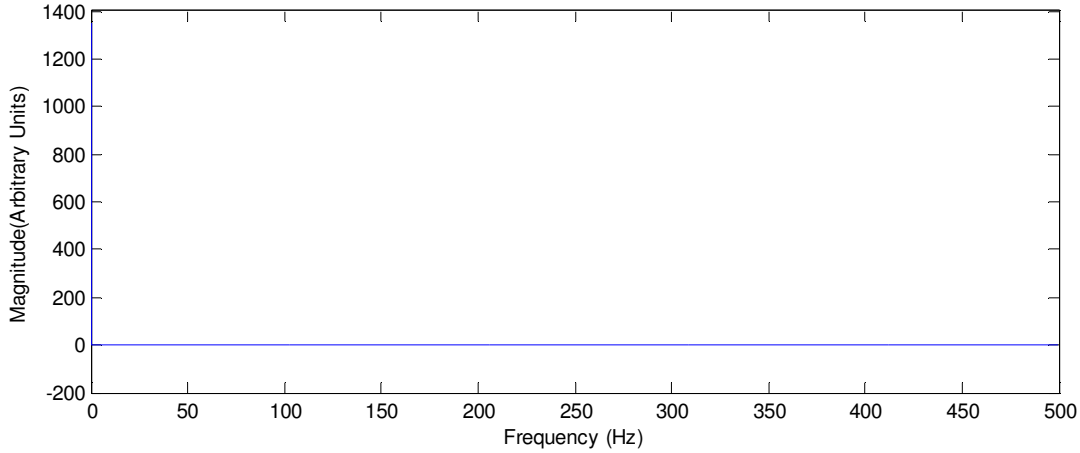

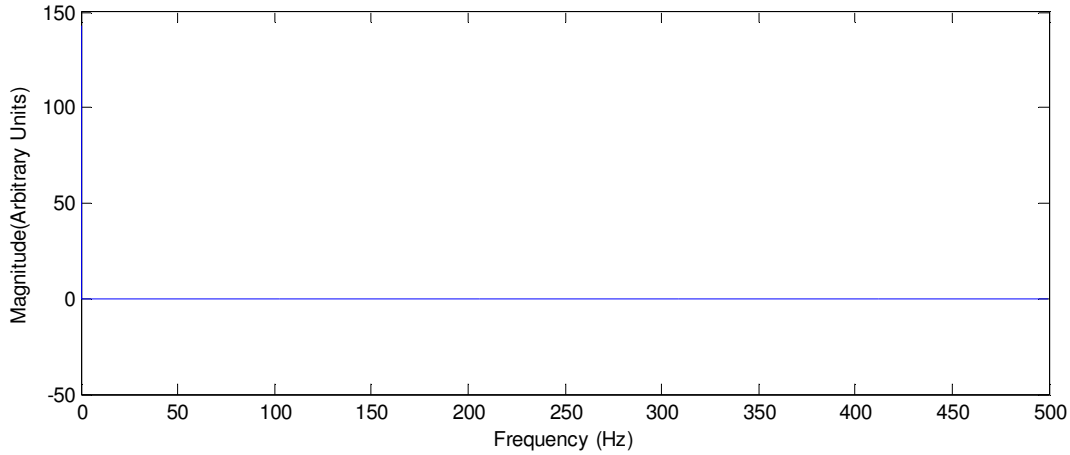
150
100
50
0
-50
Magnitude(Arbitrary Units)
0
50
100
150
200
250
300
350
400
450
500
Frequency (Hz)

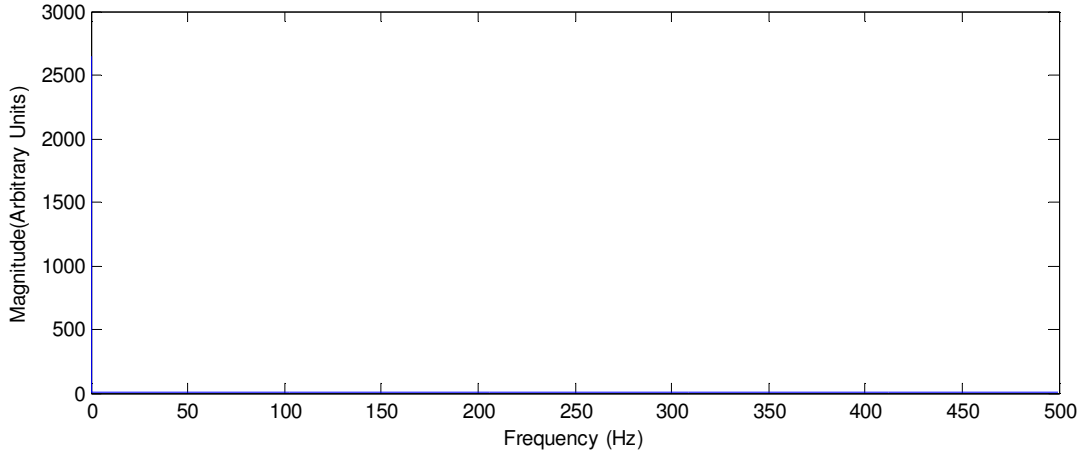
3000
2500
2000
1500
1000
500
0
Magnitude(Arbitrary Units)
0
50
100
150
200
250
300
350
400
450
500
Frequency (Hz)

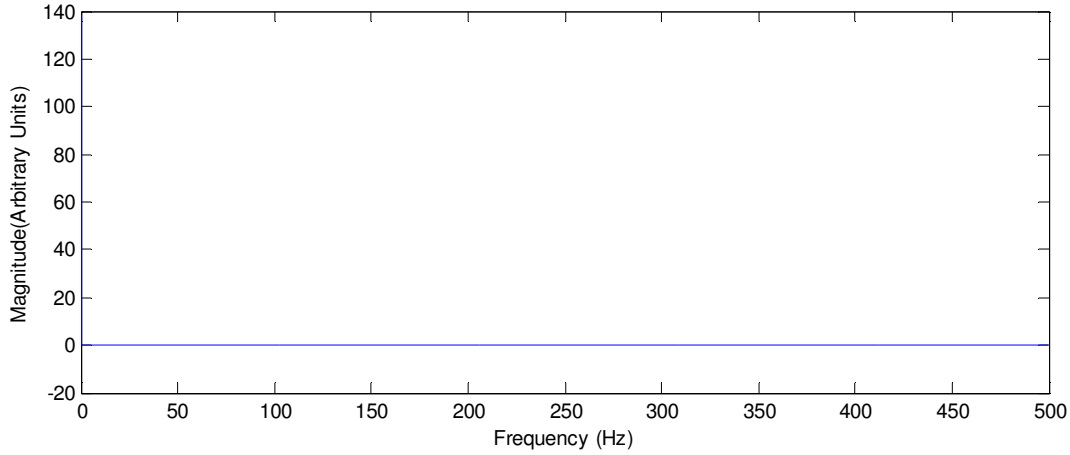
140
120
100
80
60
40
20
0
-20
Magnitude(Arbitrary Units)
0
50
100
150
200
250
300
350
400
450
500
Frequency (Hz)

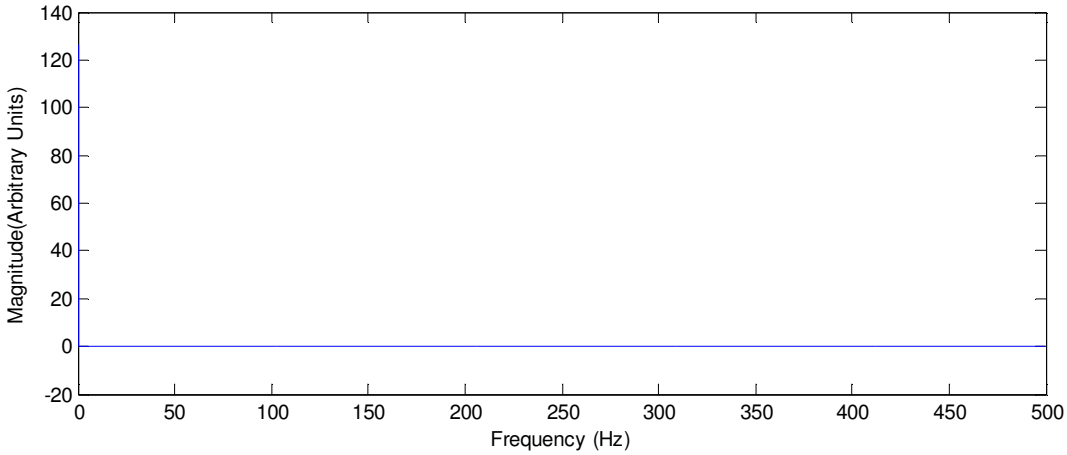
140
120
100
80
60
40
20
0
-20
Magnitude(Arbitrary Units)
0
50
100
150
200
250
300
350
400
450
500
Frequency (Hz)

Works Cited

1. **Jorgensen, Matthew R.** How Steam Generators Work. *eHow Family.* [Online] http://www.ehow.com/how-does_5095506_steam-generators-work.html.

2. **USNRC.** Backgrounder on Steam Generator Tube Issues. *USNRC.* [Online] February 4, 2011. http://www.nrc.gov/reading-rm/doc-collections/fact-sheets/steam-gen.html.

3. **Cothron, Helen.** Sr. Project Manager, EPRI. *Inspection and Evaluation of Steam Generator Tubes in PWR's.* January 26, 2011.

4. **Folsom, Daniel.** TVA. *Steam Generator NDE.* February 2, 2011.

5. Eddy Current Theory. *Innospection.* [Online] http://www.innospection.com/pdfs/Eddy%20Current%20Theory.pdf.

6. **NDT.** Modes of Sound Wave Propagation. *NDT Resource Center.* [Online] http://www.ndt-ed.org/EducationResources/CommunityCollege/Ultrasonics/Physics/modepropagation.htm.

7. —. Sound Propagation in Elastic Materials. *NDT Resource Center.* [Online] http://www.ndt-ed.org/EducationResources/CommunityCollege/Ultrasonics/Physics/elasticsolids.htm.

8. **Engineering Toolbox.** *The Engineering Toolbox.* [Online] ww.engineeringtoolbox.com.

9. Standing Wave. *Wikipedia* . [Online] May 1, 2011. [Cited: May 4, 2011.] http://en.wikipedia.org/wiki/Standing_waves.

10. **NDT.** Attenuation of Sound Waves. *NDT Resource Center.* [Online] http://www.ndt-ed.org/EducationResources/CommunityCollege/Ultrasonics/Physics/attenuation.htm.

11. **The Columbia Encyclopedia, Sixth Edition.** Loudspeaker. *The Columbia Encyclopedia.* [Online] 2008. [Cited: April 13, 2011.] http://www.encyclopedia.com.

12. **Fletcher, Jeff.** Understanding Binaural Beats. *SoundOnMind.* [Online] 2006. [Cited: April 13, 2011.] http://www.soundonmind.com/binauralbeats.

13. *Test and Measurement.* **Wilson, Jon and Ball, Stuart.** Burlington, MA : Elsevier Inc., 2009.