To the Graduate Council:

I am submitting herewith a dissertation written by Carol Griffith Davies entitled, "The Dialectics of Power and Dissent: A Study of the U.S. Army's Chemical Stockpile Disposal Program." I have examined the final copy of this dissertation for form and content and recommend that it be accepted in partial fulfillment of the requirements for the degree of Doctor of Philosophy, with a major in Sociology.

Dr. Sherry Cable, Major Professor

Dr. Donald Clelland, Major Professor

We have read this dissertation
and recommend its acceptance:

Accepted for the Council:

Associate Vice Chancellor and
Dean of the Graduate School

The Dialectics of Power and Dissent: A Study of the U. S. Army's Chemical Stockpile Disposal Program.

A Dissertation

Presented for the

Doctor of Philosophy

Degree

The University of Tennessee, Knoxville

Carol Griffith Davies

August 1995

Copyright © Carol Griffith Davies, 1995
All rights reserved

DEDICATION

To my husband, Tom;

To my mother and father, who made a larger life possible for me;

To William and Andrew;

to

Amber and David
who will
inherit
our democracy and what we make of it.

ACKNOWLEDGMENTS

In the course of this research, I have accumulated many debts. First, I would like to thank my major professors, Dr. Donald Cleveland and Dr. Sherry Cable for their invaluable guidance, patience and support. I have come to appreciate the role of the scholar/teacher through their example. I would also like to thank the other members of my committee: Dr. John Gaventa, Dr. Robert Gorman and Dr. John Nolt.

I would like to thank Mr. Shannon Wilson, the archivist in charge of Special Collections at Berea College for his kindness and Mrs. Jerry Parrish Dimitrov, Curator of the John Wilson Townsend Room at Eastern Kentucky University. I am indebted to Berea College for permission to publish excerpts from documents contained in the Southern Appalachian Archives and to the U. S. Army, Public Affairs Officer, Ms. Marilyn Tischbin, in the Office of the Program Manager for Chemical Demilitarization at Aberdeen Proving Ground, MD., for permission to publish graphics and other documents which appear in the appendices. The following people deserve special recognition for helpful discussions: Dr. Vladimir Protopopescu and Dr. David L. Feldman, both of the Oak Ridge National Laboratory, and Professor Andrew Grimes, in the department of Organizational Management Studies at the University of Kentucky at Frankfort. I would like to thank two diligent proofreaders for their tireless efforts on my behalf: Althea Tate of the ORNL Physics Division and Lisa Davies Nydick. I am also grateful to the *Center for Computationally Intensive Physics*, in the Physics Division of the Oak Ridge National Laboratory (Oak Ridge, Tennessee) for technical support. I would like to

recognize Professor Conner Bailey, Associate Professor in the Department of Agricultural Economics and Rural Sociology at Auburn University for generously sharing with me the fruits of his research and for providing me with numerous pertinent documents. I would like to thank Dr. Ken Tennell of Eastern Kentucky University for allowing us to make use of his home as a base of operations during the entire course of the field work. His gracious support was a life line without which this research could not have been completed. Most of all, I am happy to acknowledge my debt to all the citizen activists whose names cannot be mentioned because of the rules governing privacy. Without their support, cooperation, enthusiasm and friendship, this research would have been impossible. I am indebted to many of them for sharing with us, not only their home and hearth, but also, in many cases, boxes of valuable documents pertaining to the history of the struggle. I am grateful to the many military and civilian personnel at the Pentagon for their openness and candor and to the many state and local officials who shared with me their time and experiences with this issue. Finally, I would like to thank my husband, K. Thomas R. Davies. He shared each step of this long odyssey and saw many of the ideas expressed in this work develop. No one ever had a better friend.

Abstract

This research is a study of power in contemporary American society which calls into question the assumptions of openness and permeability so cherished by the pluralists. Within a power framework, we explore the functional realities of government that illuminate why some powerful interests manage to prevail with some consistency, while the broad public is assigned to a lesser task. The context for the study is the U. S. Army's $ 11 billion dollar Chemical Stockpile Disposal Program (CSDP). The Army's decision to use on-site incineration for the destruction of the stockpile ignited a social movement in opposition. Employing participant observation and in-depth interviews, we analyze the citizen-led opposition movement that began at the Lexingtron-Bluegrass Army Depot (LBAD) in Kentucky, and the ambiguous role of the NEPA (National Environmental Policy Act) regulatory process. Using the 'three dimensions of power' framework formulated by Steven Lukes (1974) and extended by Gaventa (1980), and Bachrach and Baratz (1974), we uncovered patterns of power (i.e.,"hidden faces of power'') that allowed the Army to exploit some issues and suppress others while all the time urging that citizens abide by "the process.'' This was accomplished chiefly through the 'mobilization of bias', and propped up by a heavily-financed public relations campaign which emanates from the Pentagon. We conclude with some recommendations for what can be done to revitalize our moribund democracy.

Preface

In the '50's, Dwight Eisenhower warned us of the growing power of the military-industrial complex. His words are now almost a cliché. However, never has it been more imperative that we understand the degree to which the military in conjunction with industry and governmental agencies, have taken control over the realm of what used to be public discourse. In seeking to clarify the nature of the military-industrial complex, Pilisuk and Hayden (1965) extend the concept. They state that the United States does not contain a military industrial complex, but instead argue that the United States "is a military industrial complex" (p. 68). They write, "We are describing the current system as one of overall 'minimal accountability' and 'minimal consent'. We mean that the role of democratic review, based on popular consent, is made marginal and reactive. Elite groups are minimally accountable to publics and have a substantial, though my no means, maximum, freedom to shape popular attitudes" (Pilisuk and Hayden 1965, p. 68). It is important to emphasize at the outset that the furor surrounding the Chemical Stockpile Disposal Program is not a technical controversy, nor is it just another local "siting problem," but a profoundly disturbing illustration of deep-seated structural change, a move away from 'government by the people.'

The story that follows is several things: (1) It is a story of empowerment, of citizens' attempts to take control of decisions that affect their lives and that of their children; (2) it is the story of power holders and their attempts to thwart citizens' efforts; and (3) it is, in the final analysis, a

demonstration of a profoundly disturbing trend in the United States, away from classical notions of 'democracy' toward a form hollowed out of any real meaning involving "government of the people, by the people, and for the people," to a democracy that is just a shell for the operation of unbridled state power aided by the very laws that were designed to protect both the citizens and the environment. This then, is a study of power, the power of the modern state to insure its prerogatives through organized institutional arrangements and propaganda.

My viewpoint, in telling the story of the Chemical Stockpile Disposal Program is different from the account as told by the Army in which the destruction of the stockpile is presented as an issue of "national interest" in terms of our treaty obligations and the Congressional mandate. Howard Zinn (1980) reminds us that "nations are not communities and never have been." He writes, "The history of any country, presented as the history of a family, conceals fierce conflicts of interest (sometimes exploding, most often repressed) between conquerors and conquered, masters and slaves, capitalists and workers, dominators and dominated in race and sex" (Zinn 1980, p. 9). Therefore, I prefer to tell the story of the Chemical Stockpile Disposal Program (CSDP) from the point of view of the citizens who are being asked to shoulder the consequences of the current destruction plan or, as Parent (1970) has suggested, "from the bottom up."

Finally, this is a story about dissent and the context for dissent in contemporary American society. There are some who argue that dissent is no longer necessary or "proper" given the plethora of avenues open to citizens for redress of their grievances. They will find this case study most disquieting.

Table of Contents

CHAPTER 1

Introduction

1.1 The Problem: Are We a Hobbesian or a Lockean Society? 1
1.2 Description: Background of the Problem 7
1.3 Gas and Fire : Chemical Weapons in Historical Context 9
1.4 U. S. Chemical Warfare Policy 13
1.5 International CW Treaties 16
1.6 History of Chemical Weapons Production 18
1.7 History of Chemical Weapons (CW) Destruction 23
1.8 Overview: Creation of the U. S. Army's Chemical Stockpile Disposal Program(CSDP.) 28
1.9 The Army "Decides:" The Evolution of Incineration as the Technology of choice 32
1.10 Description of the "Baseline" Technology 37
1.10.1 Cryofracture 38
1.11 JACADS 39
1.12 Geography and Distribution 41
1.13 Agent Characteristics 41
1.14 Political Economy of Chemical Weapons (CW) Destruction 44
1.14.1 Life Cycle Cost 44
1.15 Political Economy of Incineration: Recent Trends 53
1.16 SUMMARY 54

CHAPTER 2

The Nature of Power: Machiavelli to Lukes

2.1 The Nature of Power 56
2.2 Prophet for a Modern Age 60
2.3 The Three Faces of Power 65
2.4 The First Dimension of Power- The Pluralists 66
2.5 Elite Theory 70
2.6 The Second Dimension of Power 72
2.7 The Third Dimension of Power 77
2.8 State Power 80
2.8.1 The Problem of Centralization 85
2.8.2 The Rise of the Pentagon 89
2.9 SUMMARY 90

CHAPTER 3

The People of Madison County: The Community Responds

3.1 A Short History of Two Small Places: Berea and Richmond, KY. 92
3.2 The Lexington-Bluegrass Army Depot (LBAD) 98
3.3 Army Credibility Problem 101
3.4 The Army Decides 103
3.5 The Army Delays Announcement 105
3.6 INCINERATION. . .NOT! Grassroots Opposition to Incineration 107
3.7 The Emergence of Grassroots Opposition and the CSDP 109
3.7.1 Concerned Citizens of Madison County 110
3.7.2 Common Ground/KEF 113
3.7.3 Common Ground/Fayette Co. 119
3.7.4 Other Voices 120
3.7.5 The CWWG 121
3.8 The Evolution of Issues and "Non-Issues" 123
3.8.1 Programmatic vs. Site Specific 123
3.8.2 Public Safety 124
3.8.3 Chronic Effects: The Anatomy of a Non- Issue 125
3.8.4 Future Use of Incinerators 126
3.8.5 Transportation 129
3.8.6 Alternative Technologies 131
3.8.7 Decontamination: The *Other* Non-Issue 137
3.9 Depth and Breadth of Community Support 138
3.10 Community Review Studies: The Co-optation of Citizen Protest 141
3.10.1 Madison County Task Force on Chemical Weapons 141
3.10.1.1 The Trip to Tooele, UT 143
3.10.2 Kentucky Community Review /Study Team 147
3.11 Army Response to Community Study Groups' Conclusions.....151
3.12 Community Review Studies at Other Sites 153
3.13 The Emergency Operations Center (The "EOC") 156
3.14 The 'Colonized' and the 'Colonizer': The Community as a Colony of the Pentagon 159
3.15 Building a Movement: Opposition Grows at Other Sites 161
3.15.1 Aberdeen Proving Ground (APG) 161
3.15.2 Newport Army Ammunition Plant (NAAP) 166
3.15.3 Tooele Army Depot (TEAD) 167
3.15.4 Pine Bluff Arsenal (PBA) 170
3.15.5 Anniston Army Depot (ANAD) 171
3.15.6 Umatilla Depot Activity (UMDA) 174
3.15.7 Pueblo Army Depot (PUDA) 175
3.16 Chapayevsk: Citizen Opposition in the former Soviet Union 176
3.17 Hawaiian Islanders Oppose Kalama Island (JACADS) Facility.....178
3.18 Countermovement Activity 180
3.19 Movement Update 183
3.20 SUMMARY 186

CHAPTER 4

The Second Face of Power: NEPA, The Army, and the Myth of Public Participation

4.1 NEPA: The National Environmental Policy Act of 1969 188
4.1.1 Background 188
4.1.2 The NEPA Review Process: An Overview.....189
4.1.3 CEQ: The President's Council on Environmental Qulaity.....191
4.1.4 The Environmental Impact Statement (EIS) 193
4.2 Programmatic : The Generic Approach to Environmental Impact Assessment 196
4.3 Criticisms of NEPA 198
4.4 The NEPA Process for the CSDP 199
4.4.1 The DPEIS 200
4.4.2 The FPEIS 203
4.4.3 SSEIS: The Evolution of a 'Nondecision' 205
4.5 PHASE I and PHASE II (SSEIS).....215
4.5.1 Data Collection for Phase I 218
4.5.2 Phase I and Phase II: Non Compliance with NEPA 219
4.5.3 Phase I Conclusions 221
4.6 'The Scoping Game': What Do These People Want?! 222
4.7 The Ambiguous Role of Public Participation and NEPA 225
4.8 Summary and Conclusion 228

CHAPTER 5

The Third Face of Power: Legitimations, Ideologies, and Power

5.1 The Third Dimension: Language and the Discourse of Power 230
5.1.1 Euphemisms of Domination 231
5.1.2 What Does the Word "SITE' Mean?.....234
5.1.3 Army 'Newsspeak' and the CDSP ,..... 236
5.2 The Function of Legitimation 240
5.3 Army legitimations for the CSDP 243
5.4 Legitimating Practices and Institutions: SARA Title III and Its relationship to the ICCB 244
5.4.1 Mitigating Public Concern through 'Compensation' 249
5.4.2 The ICCB and Control of Information.....251
5.5 Ideology and Myth in the CSDP 252
5.5.1 Ideologies and the CSDP 253
5.5.2 Eliade and the Function of Myth 254
5.5.3 The Myth of Democracy 255
5.5.4 Hierophanies and Kratophanies 260
5.6 Gramsci's Concept of Ideological Hegemony 262
5.7 The Myth of Emergency Preparedness 266
5.8 The Creation of CSEPP 269
5.8.1 Plume Dispersion Models 272
5.8.2 In Harms Way: Communities at Risk 274
5.9 Summary and Conclusion 277

CHAPTER 6

Propaganda and the Chemical Stockpile Emergency Preparedness Program (CSEPP)

6.1 The Third Face of Power: Propaganda and CSEPP 278
6.2 The Nature of Propaganda 280
6.3 Military Use of Propaganda 281
6.4 Characteristics of Modern Propaganda 282
6.5 Ellul's Propaganda Model: The State's Necessity 283
6.6 Army Propaganda Pieces: 296
6.6.1 CSEPP Calendar 296
6.6.2 SRFX-91 297
6.6.3 Videos for the General Public 299
6.7 The Mass Media 300
6.7.1 Broadcast Media 303
6.8 The Committee for National Security (CNS) 304
6.8.1 Horizontal Propaganda 304
6.8.2 Project Victory and "The Politics of Gridlock" 305
6.8.3 *Project Victory* and "The Harford Community Leader Dialogue Forum on Chemical Demilitarization 310
6.9 The Role of the National Laboratories and the Control of Information 314
6.10 Summary and Conclusion 318

CHAPTER 7

Discussion and Conclusion

7.1 An Attempt at Synthesis 320
7.2 Conceptual Components and Their Relationship 320
7.3 Limitations of the Study 324
7.4 Reprise: General Theoretical Import 326
7.5 Stockpile Activities Update 330
7.6 'What's To Be Done? 331

References 336

Appendices 374

Appendix A. Unitary Stockpile Distribution Around the Country 375
Appendix B Percent of Stockpile of Unitary Weapons at Each Storage Site (Table 1) 377
Appendix C CSDP Implementation Schedule 379
Appendix D U. S. Superfund Sites 381
Appendix E Nerve Gas Rocket 383
Appendix F "Through the Past...Defense Against Chemical Weapons" 385

Appendix G Methodology 387
Appendix G-1 Newspaper Clip Files 1984: List of Headlines.....395
Appendix H Nerve Gas Chronology 398
Appendix I Demographic Data for Each Site 400
Appendix I-1 Demographic Data for Aberdeen Proving Ground 401
Appendix I-2 Demographic Data for Anniston Army Ammunition Depot 403
Appendix I-3 Demographic Data for Lexington-Bluegrass Army Depot 405
Appendix I-4 Demographic Data for Newport Army Ammunition Plant 407
Appendix I-5 Demographic Data for Pine Bluff Arsenal 409
Appendix I-6 Demographic Data for Pueblo Army Depot 411
Appendix I-7 Demographic Data for Umatilla Army Depot 413
Appendix I-8 Demographic Data for Tooele Army Depot 415
Appendix J Sample Interview Schedules CSDP Study 417

VITA 430

ACRONYMS AND ABBREVIATIONS

ANAD	Anniston Army Depot (Alabama)
APG	Aberdeen Proving Ground (Maryland)
CAMDS	Chemical Agent Munitions Disposal System (Utah)
CBW	Chemical and Biological Weapons
CNS	Committee for National Security
CSDP	Chemical Stockpile Disposal Program
CSEPP	Chemical Stockpile Emergency Preparedness Program
CONUS	Continental United States
CW	Chemical Weapons
DHHS	Department of Health and Human Services
DOD	U. S. Department of Defense
DOT	U. S. Department of Transportation
DOE	U. S. Department of Energy
DPEIS	Draft Programmatic Environmental Impact Statement
D2PC	Army Air Disperson Computer Simulation Model
EIS	Environmental Impact Statement
FPEIS	Final Programmatic Environmental Impact Statement
EPA	U. S. Environmental Protection Agency
EPIC	Emergency Preparedness Information Coordination system
EOC	Emergency Operations Center
EPZ	Emergency Planning Zone
FEMA	Federal Emergency Management Agency
FPEIS	Final Programmatic Environmental Impact Statement
GAO	General Accounting Office
GA	Chemical nerve agent (tabun)
GB	Chemical nerve agent (sarin): highly volatile
GD	Chemical nerve agent (soman)
H, HD, HT	Forms of mustard agent (blister agents)
IRZ	Immediate Response Zone
ICCB	Intergovernmental Consultation and Consulting Boarads
JACADS	Johnston Atoll Chemical Agent Disposal System
LBAD	Lexington-Bluegrass Army Depot (Kentucky)

LCt_{50}	Lethal Dose to 50 percent of those exposed
MITRE	MITRE Corporation
NAAP	Newport Army Amunition Depot (Indiana)
NAS	National Academy of Sciences
NEPA	National Environmental Policy Act (1969)
NIMBY	Not-In-My-Backyard
NRC	National Research Council
ORNL	Oak Ridge National Laboratory (Tennessee)
OTA	Office of Technology Assessment
PAECE	Protective Action Evaluator for chemical emergencies
PARDOS	Partial exposure calculation code (computer model)
PAZ	Protective Action Zone
PBA	Pine Bluff Arsenal (Arkansas)
PIC	Products of Incomplete Combustion
PM Cml Demil	Program Manager for Chemical Demilitarization
PUDA	Pueblo Depot Activity
RCRA	Resource Conservation and Recovery Act
RMA	Rocky Mountain Arsenal
RTQ	Response to Query
SSEIS	Site-Specific Environmental Impact Statement
SOP	Standard Operating Procedures
TEAD	Tooele Army Depot
UMDA	Umatilla Depot Activity (Oregon)
USATHMA	U. S. Army Toxic and Hazardous Materials Agency
VX	Most lethal form of nerve agent: persistent

"And they shall beat their swords into plowshares, and their spears into pruning hooks; nation shall not lift up sword against nation; neither shall they learn war any more"
(Yeshaya 2:4).

Chapter 1

Introduction

"We submit to the peaceful production of the means of destruction, to the perfection of waste, to being educated for a defense which deforms the defenders and that which they defend."

Herbert Marcuse 1968, *One Dimensional Man : Studies in the Ideology of Advanced Capitalist Society*

1.1 The Problem: Are We a Hobbesian or a Lockean Society?

This research examines the issues of politics and power in contemporary American society. It contributes to our understanding of how state policy-makers, private planners and the military use public institutions and environmental laws to serve their own special interests. To explore these issues, the study focuses on the controversy surrounding the destruction of the United States' arsenal of lethal unitary[1] chemical weapons (CW) by high-temperature incineration.

The Army's decision to build eight nerve-gas incinerators to carry out the destruction of the weapons "on site" will be examined as well as the regulatory climate and the citizen opposition that has arisen in response. We can see in the unfolding of the drama to be presented here, not just another "siting" controversy, or "locational conflict," but a political and social conundrum that challenges our fundamental assumptions about the way our democracy functions. Although policy issues will be discussed, the central interest is not an analysis of U.S. chemical weapons (CW) policy per se.

[1] Unitary weapons are those in which a live agent is loaded into the weapon at the time of manufacture.

Rather, the focal point is the political climate surrounding the plan to destroy the weapons known as the Chemical Stockpile Disposal Program (CSDP).

The following are an example of some of the fundamental research questions that have guided this research: (1) What is the nature of power in the modern state as seen through the lens of the Chemical Stockpile Disposal Program? (2) How does the state maintain its prerogatives in the face of organized opposition? (3) What legitimations are used to support the status quo and in what manner are they promultaged? (4) What part does the regulatory process play in defining the paramaters for citizen input? (5) What factors gave rise to the early emergence of organized opposition at the Lexington-Bluegrass Army Depot (LBAD) in Kentucky (with only 1% of the stockpile) as opposed to the seven other sites with appreciably more lethal chemical weapons stored?

This work challenges a general assumption held by many political scientists, i.e., that siting controversies are debates about competing interests with equal power in a relatively open system (Corry 1979). We maintain that, although conflicts over siting are involved, this is not just another "siting" controversy. Nor is it a purely *technical* controversy, notwithstanding the debates about incineration. What it is, is a story about power and about the distribution and operation of power in what is believed to be the exemplar of Western democracies, the United States. What Michael Crenson (1971) said in *The Unpolitics of Air Pollution,* is also true of this research: "What is at stake in this investigation is the allegation of openness of the American political system" (Crenson 1971, p. 5). In addition, there is the further question of whether we have a democracy at all, or whether we have evolved some hybrid that only looks like democracy.

Parenti (1980) suggests that one might better think of ours as a *dual* (italics mine) political system: a symbolic system centered around electoral politics and voting behavior, etc, and a *substantive* (italics mine) system involving multibillion dollar contracts, tax write-offs, give aways and serving major producer interests. "The symbolic system," he argues, "is highly visible, taught in the schools, dissected by academicians, gossiped about by newsmen. The substantive system is seldom heard of or accounted for" (Parenti 1980, p. 304). We are concerned here with the *substantive* system: the world of anonymous Pentagon planners, high-tech multinational corporations, secret negotiations, and a ponderous and bureaucratic regulatory system which all but insures the fact that the status quo will be maintained against the incursion of outside claims, in this case, that is citizens' demands for change. In short, we are concerned with analyzing exactly how the state maintains the status quo and yet gives the appearance of openness so touted in Army news briefs about the Chemical Stockpile Disposal Program (CSDP). Nevertheless, despite the fact that we mention "secret negotiations" (and indeed there were such), we are not championing a "conspiracy" theory involving evil individuals consciously conspiring to elude the laws and cause damage to the environment and the general population. In fact, there are many decent, well-intentioned people involved in this project, that really believe in what they are doing (however, this does not render them harmless). The focus of our argument is rather on the structural aspects of the operation of power. As Michael Albert (1992) wrote, "What we have to understand is the script behind the actors, and that script flows from the interstices of institutional power, not from the will of some

malevolent conspirators operating outside the bounds of the system or even against it" (Albert 1992)..

Finally, we will present here, what Parenti (1970) referred to as "a view from the bottom." This is a view of power as seen from below, from the position of those involved in the struggle for inclusion and empowerment. We are looking at the emergence of rebellion as a way to analyze the way in which power relationships are altered to meet the challengers. In doing so, we hope to reveal the underlying structures of power that remain hidden from view.

I shall suggest that to understand the state's use of power in the context of the present study, it is necessary to present a dialectical analysis. The exercise of power is dialectical in the sense that the relationship between the Army and the citizen activists is always changing, evolving, never static; it is dialectical in the sense that the maintenance of the status quo depends to a large extent on the dynamic interaction between what the state proposes and how the challengers respond. Indeed, power holders must always be alert to innovations on the part of challengers that call for novel responses and the erection of either new barriers or the reinforcement of old ones.

In positing a dialectical relationship, we intend it in the sense described by Cardechi (1987) who wrote, "A dialectical relation is not a relation between dependent and independent variables: all variables are dependent upon each other...Mechanical causation is alien to dialectical causation {determination}" (Cardechi 1987, p. 100). Additionally, a dialectical analysis involves attention to the Marxian distinction between 'appearance' and 'essence'. For Marx, the distinction between the two in no sense implies that appearance is any less "real" than essence. The distinction between appearance and essence refers to

different levels of determination rather than different levels of reality. And finally, as Mandel (1977) cautioned, "The main danger for any scientist involved in the study of social phenomena is that of taking anything for granted, of 'problem blindness'. The distinction between appearance and essence, which Marx inherited from Hegel and which is part and parcel of the dialectical method of investigation, is nothing but a constant attempt to pierce farther and farther through successive layers of phenomenon. . ." (Mandel 1977, p. 19). We will return again to this central theme in the course of this analysis.

The English philosopher, John Locke (1689) argued in his *Second Treatise of Civil Government* that the state should rest upon consent, and that the governing authorities should never have absolute or monistic power (Locke 1689). Tyranny was understood as arbitrary interference by government with individuals' natural rights (their person and property) without the backing of law made by representatives. Locke's main target in the *Treatise* was John Hobbes for whom the subject of state power was pivotal. According to Hobbes, "the Sovereign { i.e., the State} is Judge of what is necessary for the Peace and Defense of his subjects, and Judge of what doctrines are fit to be taught them" (Dolan, 1991, p. 6). Hobbes' argument is taken up in contemporary society by those who champion the idea that complex technical questions are best handled by "experts." This position is articulated by Allen Mazur (1981) in *The Dynamics of Technical Controversy*. Mazur observes that "We never make a point of bringing housewives and blue collar laborers into formal decisions about the prime interest rate or whether or not to attack Iran, so why do it when evaluating nuclear power plants and recombinant DNA laboratories?" (Mazur, 1981, p. 125-126). With

respect to the Chemical Weapons Destruction Program, the Army unilaterally , i.e., without consulting citizens in the potentially-affected comunities, decided to use incineration as the baseline technology. This falls directly in line with the Hobbesian argument that the State has the right to decide what is best for its citizens.

The Army's rhetoric of inclusion, by which they claimed to have incorporated all relevant citizen concerns into their decision-making matrix, belies the fact that many of the important decisions relating to the disposal of the weapons were made behind closed doors in the board rooms of multinational corporations and by high-ranking military *and* civilian officials at the Pentagon. In fact Dolan (1991) argues that many people view the post-modern political condition as demanding private Hobbesian action coupled with public Lockean rhetoric (Dolan 1991). It seems that whatever value we place on democracy as an abstract political philosophy, it has no place in the world of *'realpolitik'* where power holders can, through the operation of the system itself, subvert the real meaning of the concept. I shall argue that although we are said to be a Lockean society devoted to maximizing individual freedom, we are, in fact, as Dolan (1991) suggests, a Hobbesian society couched in Lockean rhetoric.

In a democracy, control is intended to be exercised by the people and their elected representatives. As Lukes (1974, p. 29) reminds us, "Under conditions of representative government the people are supposed to rule those who govern them." We argue that to a very considerable degree, the American people are not now exercising effective control over the Armed Forces; nor indeed is the Congress, despite its primary constitutional responsibility in this field and despite its requirement for annual progress

reports from the Army. As a prominent lawyer from a well-respected Lexington, KY. law firm quipped, "Separation of powers is bogus. The Army is an extension of Congress. It is in Congress's own interest {to support the Army}." So we are left with a problem. How can one argue that democratic principles are being violated when power holders are able to control outcomes to their advantage by working through the system and not having to revert to "extra-legal" measures? The answer is to shift the study away from a focus on "process" as an end in itself and toward some empirical consideration of substantial effects, e. g., who gets what. (Parenti, 1980).

1.2 Description: Background of the Problem

Aldous Huxley once observed that, "Technological progress has merely provided us with more efficient means for going backwards" (Larson and Cyrus-Michells 1987). His words may be applied to the Army's plan to destroy the United States' stockpile of lethal unitary chemical weapons (CW), also known as the Chemical Stockpile Disposal Program (CSDP). For we have not only created weapons whose potential devastation is wholly unimaginable, we have been stockpiling them for decades. The ultimate irony is that we have built weapons that are actually easier to build than to destroy. In fact, a well known scientist involved with the creation of the U.S. chemical weapons program, admitted that very little thought was given to disposing of the weapons when they were first created, as it was assumed they would be *used* (CBS, "*60 Minutes* ," January 5, 1992).

Between 1943 and 1969, when the United States declared an 18 year moratorium on unitary weapons production, the U.S. military had amassed an arsenal of chemical weapons that is estimated to be in the range of 27, 000

tons. (Rogers, et al. 1990). (The exact amount of the stockpile is classified for "national security" reasons). The "retaliatory stockpile," as it is referred to by the Army, includes both nerve agents and "vesicant" (i.e, blister agents), commonly known as mustard gas. The explosively-configured agents and munitions are stored in earth-bermed bunkers termed "igloos." The only munitions stored in the open are ton containers of mustard agent. The weapons are maintained at Army depots around the country and on Johnston Atoll, a small island in the South Pacific 800 miles southwest of Hawaii. The Tooele Army Depot (Tooele, Utah) alone, with 42% of the stockpile, has enough nerve agent to kill every creature on earth many times over. The weapons are stored in a variety of configurations such as rockets, spray tanks, projectiles, and bulk containers. Each has been especially formulated to cause major injury or death to enemy forces in time of war (Department of the Army, U.S. FPEIS 1988).

The Army offers several arguments for the need to destroy the weapons. They argue, for example, that : (1) the weapons are deteriorating posing dangers from leaking or explosion; (2) international treaty obligations require that both the U.S. and the former Soviet Union destroy their respective arsenals of chemical weapons (CW) within ten years, or by the year 2004; (3) Congress has mandated the destruction of the weapons. Each of these assertions will be examined in detail later in the analysis. However, making chemical weapons has proven to be a lot easier than "unmaking" them. In fact, the proposed plan to build eight specially-designed high-temperature incinerators at Army depots around the country has proven to be a boondoggle for the Army. It faces escalating costs --- the current life-cycle

cost is approaching $9 billion dollars --- and a militant citizen opposition movement gaining momentum daily.

No one disputes the fact that the world would be better without these weapons of mass destruction, however, there is tremendous controversy over (1) how to destroy the weapons *safely* ; (2) *where* to destroy them {either on-site or transported to a regional or national site }; (3) whether continued storage is still a viable option---and for how long; and (4) whether some alternative technology other than incineration should be tried. However, the "technical'' questions pale before the social, economic and political considerations. No federal program in recent history has involved so vast an array of federal, state and local governments and involved compliance with so many federal laws, i.e., the National Environmental Protection Act of 1969 (NEPA), the Recourse Conservation and Recovery Act of 1976 (RCRA), the Toxic Substances Control Act of 1976 (TSCA), and the Clean Air Act of 1970 (as amended). Added to this are the many federal agencies involved in the project, e.g, the Environmental Protection Agency (EPA), the Federal Emergency Management Agency (FEMA), the Department of Health and Human Services (DHHS), the Department of Defense (DOD), and, of course the Department of the Army (DA). Additional players are the Pentagon, Congress and several national laboratories.

1.3 Gas and Fire: Chemical Weapons in Historical Context

The idea of chemical weapons is not new. There is evidence that some form of chemical weapons were used in wars dating as far back as four or even five hundred years before the birth of Christ. Thuckydides reports that the Spartans, in the battles of Plataeae and Belium, during the Peloponesian

War, 431-404 B.C., used smoke containing arsenic for attack. Plutarch reports in the vita of Quintus Sertorius that he used an ash-like sand in the war against the Charakitanes in Spain, which was driven by the wind, thus causing coughing and blindness. In 187 B.C. according to Polybius, 22nd Book, 11th Chapter, the people of Ambrajia, besieged by the Romans, produced smoke from a barrel, filled with fine feathers and glowing coals to drive out the Romans from the mines (Wachtel 1941).

Fire has always been one of the main weapons in war throughout history. The effects of fire and smoke were frequently combined in old-time weapons (Wachtel 1941). Such was the case with the famous Greek fire. "When Acron was besieged in 1289, three hundred catapults threw Greek fire into the town, until it was entirely burned down. Many inhabitants were asphyxiated by the smoke formed" (Lewin, 1920, p.678). Other variations of a more modern character were made by Leonardo da Vinci, Leibnitz and Johann Rudolf Glauber (1604-1668). According to reports, Glauber used a preparation made from turpentine and nitric acid to make incendiary bombs and smoke shells (Wachtel 1941).

Modern chemical warfare began with the German gas attack against the French at Ypres on April 22nd, 1915, when 5,700 cylinders, filled with chlorine gas were used. With this attack, the Germans achieved complete strategic and tactical surprise. The Allied troops were wholly unprepared. The enemy had developed a weapon for which there seemed to be no defense. This segment from Major. S.J.M. Auld's diary describes the horrors of that day:

> Ypres, April 22, 1915: Try to imagine the feelings and the condition of the {French} colonial troops as they saw the vast cloud of greenish-yellow gas spring out of the ground and slowly move down wind toward them, the vapour clinging to the

> earth, seeking out every hole and hollow and filling the trenches and shell holes as it came. First wonder, then fear; then as the first fringes of the cloud enveloped them and left them choking and agonized in the fight for breath---panic. Those who could move broke and ran, trying, generally in vain, to outstrip the cloud which followed inexorably after them (Auld, 1918, pp. 11-12).

Auld (1918) reports that the casualties of this attack were the first of approximately one million gas casualties of World War I.

According to Brown (1968), the German decision to initiate gas warfare enabled Germany to make maximum use of one of her most significant advantages over the Allied powers---a highly developed chemical industry. (The chlorine gas used at Ypres was the product of a civilian laboratory.) As a result of the attack at Ypres, the Allies began issuing gas masks to all troops, believing, of course, that if the troops were masked, they were protected. "Crude gauze bandages were immediately dispatched to the front and a crash program was instituted to develop a protective mask" (Brown 1968, p. 11). However, on July 12, 1917, the Germans achieved their second major technological breakthrough with the discovery of mustard gas---a persistent agent that could disable by coming in contact with the skin. Under favorable conditions, mustard can retain its disabling properties for weeks. The discovery of mustard introduced yet another dimension to the waging of chemical war. Now, masks were not enough to protect troops since mustard could inflict its damage by coming in contact with skin. Brown (1968) reports that "by mid-1918, gas was competing with air power and the tank as the most rapidly-expanding weapon of land warfare." "All belligerents," he observes, "were employing chemical agents to the limit of their production capability" (Brown 1968, p. 12).

After WWI, the Germans were bound by the Treaty of Versailles which all but brought chemical weapons research to a halt in Germany. Funding dried up and research had to be done in strictest secrecy. When research resumed, Hitler feared that they were twenty years behind the Allies in developing offensive chemical weapons. But despite the restricted research program, the Germans made the only significant toxic agent breakthrough of the war when they discovered nerve gas. Brown (1968) writes that "fortunately for the Allies, the Germans assumed that a comparable development had been made elsewhere" (Brown, 1968 , p. 234). In addition to fearing massive retaliation from the Allies, the Germans also feared the Russians who were presumed to possess a very formidable arsenal of chemical weapons. Brown (1968) observes that "Hitler feared poison gas for the same reason that he feared the employment of strategic air power. Each was a weapon that could exploit Germany's vulnerability as an interior continental power" (Brown, 1968, p. 236). Hitler also had a personal aversion to chemical warfare, stemming, no doubt, from his own experience of being temporarily blinded in a British gas attack near Ypres in 1918. But as the nature of the war became increasingly bitter, Hitler's former aversion was turned completely around and in 1942, he authorized unrestricted terror attacks against England (Shiver 1960); however Brown (1968, p. 237) reports that "saner minds prevented implementation of Hitler's intent."

In reality, all the major powers had serious problems with the "delivery" of chemical agents; and this, coupled with public aversion to the use of chemical weapons which was shared in large part by both political and military leaders, leads us to speculate whether restraint was due less to fear of retaliation than to lack of readiness to initiate (Brown 1968). Nevertheless, it

is ironic that toxic agents, considered sufficiently humane to be used in the execution of convicted prisoners, were not employed in a war which saw the extensive use of another weapon with enormous destructive power---the atomic bomb.

1.4 U.S. Chemical Warfare Policy

The fundamental tenet of U.S. chemical weapons policy has long been one of "no first use." In 1943, President Roosevelt stated categorically that "we shall under no circumstances resort to use of such weapons unless they are first used by our enemies" (Brown 1968, p. 264). Brown (1968) argues that the primary sources of this policy were external to the United States. He writes, "the pattern of abstention had been formed by allied and enemy powers alike, and the United States had neither the military capability nor the will to contest this decision until late in the war" (p. 263).

This "no first use" policy was later reaffirmed by Eisenhower in 1960 and again in November 1969 (Stringer 1986). Brown (1968) forcefully argues that United States policy during the Vietnam War calls into question the U.S. resolve not to use chemical weapons as a first strike weapon. During the war, U.S. troops in Vietnam used tear gas to separate Viet Cong from civilians and sprayed thousands of acres of forest and cropland with an herbicidal defoliant ("Agent Orange") to deny food and cover to communist forces. De facto U.S. policy was seen by some to have become transformed gradually from no-first-use to "deterrence by offensive capacity" (McCarthy 1969).

Official American chemical warfare policy has traditionally centered on two concepts: disarmament and deterrence. According to the U. S. Arms Control Agency's Public Relations Office, the United States has sought to

limit the proliferation of chemical weapons through international negotiations and agreements. Of particular concern has been limiting the spread of chemical weapons to the Third World. United States efforts toward chemical disarmament include the 1984 submittal, at the Geneva Conference on Disarmament, of a draft chemical weapons convention, which would have imposed a global ban on the use, possession and development of chemical weapons (Apt 1988). More recently, a multilateral treaty, the Chemical Weapons Convention (CWC), was concluded on September 3, 1992, and signed by more than 100 signatories.

While disarmament is one tenet of U.S. policy on chemical warfare, *deterrence* represents the other. In fact, deterrence through threat of retaliation has been one of the pillars of U.S. chemical warfare policy (Apt 1988). Historically, the doctrine of deterrence can be traced as far back as the Roman Empire. Gibbon writes, "The terror of the Roman arms added weight and dignity to the moderation of the emperors. They preserved peace by a constant preparation for war. . . " (1963 {1788}, p.33). However, the doctrine of deterrence as practiced in the context of contemporary society has very different consequences than "deterrence" as practiced by the Romans preoccupied with keeping the warring barbarians at bay, for they were not stockpiling weapons of mass destruction. And, for all the reputed might and power of the Praetorian Guards, and the rapaciousness and rapine of many of her emperors, the weapons arsenals of the Romans did not possess the demonic killing power of modern-day weapons systems. Technology and the structure of the economy have changed the game dramatically, calling into question the wisdom of trying to keep one step ahead of some imagined enemy by building bigger and more deadly arsenals that are stored in our own

backyards. As Walt Kelly's "Pogo" once put it, "We has met the enemy; and it is us."

The argument for deterrence was bolstered by the belief that the Soviet Union possessed a greater arsenal of chemical weapons than did NATO (Apt 1988). Reports of Soviet chemical/biological weapons (CBW) were exaggerated, and the dangers to American populations were made frighteningly clear. Some even estimated the Soviet CBW capability to be ten times greater than the U.S. stockpile (Lewis 1989). Estimates vary, but most sources believe the former Soviet Union has about 50,000 tons of (CW) as opposed to the U.S. 27,000 tons.

The policy of deterrence maintains that a strong chemical weapons (CW) capability is essential to deter possible use by an aggressor. A necessary adjunct to this stated policy is the maintenance of a credible retaliatory capability. Military strategists argued that the United States must have the ability to respond *in kind* to a chemical weapons attack, otherwise an aggressor would possess a tactical advantage (Apt 1988). They further argued that our arsenal must contain not only defensive, but an offensive weapons capability as well; hence, the stockpiling of many different types of agents in varying weapons configurations. The U.S. Army's breezy acceptance of this policy was summed up very succinctly by an "Information Officer" at the Lexington-Blue Grass Army Depot (LBAD) a few years ago. In response to questions posed by newsmen who had been invited to tour the depot's stockpile of munitions, containing agent GB, which were scheduled for disposal, Col. Mellon, said, "We'd be living in a cocoon if we thought that other nations didn't have the same thing", and later, he explained, "It's like the big bully on the block. If he carries a big stick, you'd better carry one too.

You may never use it---and you hope you don't have to---but you carry it just the same'' (*Lexington Herald Leader*, August 5, 1970).

More recently, U.S. policymakers have shifted their attention away from deterrence and instead, are looking for ways to implement the Chemical Weapons Convention (CWC) concluded in Geneva in September 3, 1992 and signed in Paris on January 13, 1993. Representatives from more than 130 countries (including the United States and Russia) were present for the signing (U.S. Arms Control and Disarmament Agency 1993). Unlike the Geneva Protocol of 1925 (not ratified by the United States until 1975), which called for a ban only on the use of chemical weapons (CW), the CWC prohibits the use, production, and stockpiling (retention) of chemical/biological weapons, calls for a timetable for destruction of existing stockpiles, and bans the sale of precursor chemicals. The treaty also provides for challenge inspections. Signatories of the treaty are now preoccupied about possible use of chemical weapons by Third World countries. Chemical weapons are often referred to as "the poor man's atomic bomb,'' because of how cheaply and easily a chemical weapons arsenal can be acquired. One need only recall the recent incident in Tokyo in which twelve people were killed and 5,500 others sickened by the nerve gas sarin on March 20, 1995 (*Pittsburgh Post-Gazette*, May 6, 1995, p. A-4).

1.5 International Chemical Weapons (CW) Treaties

Scott (1915) reports that efforts to outlaw or control the use or possession of chemical weapons have gone on in one form or another since the Hague Peace Conference of 1899 in which the signatories agreed "to

abstain from the use of projectiles the sole object of which is the diffusion of asphyxiating or deleterious gases'' (Scott 1915, pp.225-226).

In 1925, of course, came The Geneva Protocol, the first agreement to include specific mention of bacteriological as well as chemical weapons. At the time, 29 nations signed the treaty. Although the United States did not ratify the treaty until 1975 it did adhere to its terms---at least for lethal chemical weapons (Seigel, Draft 1990). The Geneva Protocol of 1925 was brought up for consideration at a General Assembly of the United Nations held in December 1966. But it had its limitations. While prohibiting the "use'' of chemical weapons, it did not specifically forbid their production, distribution or stockpiling. In June 1990, the U.S. and U.S.S.R. signed a bilateral agreement to destroy chemical stockpiles. This Bilateral Accord required the U.S. and Russia to destroy their existing stocks of chemical weapons and to cooperate on destruction technology. A major issue that had to be resolved prior to the final signing of the treaty had to do with the Bush Administration's wish to retain 2% of the stockpile as security. In May, 1992, however, the administration relented and the U.S. abandoned this requirement.

Finally, on January 13, 1993, the first comprehensive ban of chemical weapons was signed in Paris. Representatives from more than 130 countries attended the ceremonies. The Multilateral Chemical Weapons Convention (CWC) is historic in the scope of its provisions. The CWC prohibits the development, production, acquisition, stockpiling, retention and transfer of CW; the use of CW against anyone, State Party or not (A State Party is a country which has signed and ratified the Convention); and the encouraging, assisting or inducing anyone to engage in activities involving chemical

weapons. In addition, the Convention requires all CW and CW production facilities to be declared, declarations to be checked, and all CW to be eliminated within 10 years, with storage and destruction monitored through on-site challenge inspections. (U.S. Arms Control and Disarmament Agency 1993). Despite all the good intentions of previous treaties, none contained the rigorous verification regimes incorporated in the CWC and therefore, enforcement always remained problematic. The CWC contains two verification regimes to enhance security of State Parties to the Convention and preclude the possibility of clandestine CW production, storage and use. The first includes a routine monitoring regime; the second regime, challenge inspections, allows State Parties to the treaty to request and have conducted an international inspection of any facility or location in another State Party in order to clarify and resolve questions of possible noncompliance. Despite its requirement to destroy existing stocks within ten years, the treaty does not contain any provisions concerning destruction technology. However, because every Party (nation) to the treaty must destroy their existing stocks, eyes will inevitably turn to the United States in terms of technology transfer. Profits are likely to be great to nations/corporations who get their foot in the door first.

1.6 History of Chemical Weapons Production

Poison gas research in the United States began during World War I. The term "poison gas" refers only to vesicant (i.e., blister) agents, such as mustard gas and phosgene---the nerve agents were developed later. In fact, there is no mention of nerve agents at all in a book called, *The War Gases* (Sartori 1939) written in 1939. However, the term "chemical weapons"

generally refers to the entire array of lethal weapons, both vesicants and nerve agents.

The conventional wisdom holds that gas research was begun during the patriotic fervor of WWI and then abandoned soon after the Armistice. This view has been challenged in a paper written by Whittmore (1975) in which he contends that while many Americans rejected the legitimacy of poison gas, American chemists themselves embarked on a campaign to preserve poison gas research, pressuring Congress to preserve the Chemical Warfare Society. Whittmore argues that the 'research' ethic took on a new and emboldened meaning in academia and there soon developed a research ethic that embodied both a "pure" and an "applied" component. In addition to this, a public service ideal was also incubating which was to further influence the growth of gas research in the U.S. Whittmore (1975) contends that, "The combination of a research ethic and a concern for a major social role, perhaps even a sense of mission, led American scientists into the war eager to fulfill long-standing expectations" (Whitmore 1975, p. 147).

Although some American chemists were sent to Europe, the bulk of America's poison gas research was done at home. Ironically, these efforts began in a civilian agency, The Bureau of Mines. Brophy and Fisher (1959) report that a national laboratory for "investigation of problems connected with the use of noxious gases in warfare" was authorized under the direction of the Bureau of Mines on June 8, 1917 (Brophy and Fisher, 1959, p. 5). This authorization was the result of the Army's attempt to acquire gas masks to protect the troops in Europe. Because of its previous work on mine gases, the Bureau of Mines was thought to be best qualified for such a task. At first, university chemists were called upon to assist in branch laboratories at their

universities. A liaison committee of eminent chemists was created to shuttle non-classified problems to students in university laboratories (Whittmore 1975). Harvard had such a laboratory working by September 1917 (Jones 1969). However, a larger and more efficient operation was required. Large-scale production of mustard gas was undertaken at Edgewood, Maryland at what is now the Aberdeen Proving Ground. Whittmore (1975) reports that "by the time of the Armistice the Edgewood Plant was producing thirty tons of mustard gas a day" (Whittmore 1975, p. 151).

After the war the, Chemical Warfare Service was reorganized under the Army Corps of Engineers, and later the Army Chemical Corps, greatly diminishing its importance and activities. American chemists fought back with robust lobbying activities directed at Congressional attempts to place a moratorium on further gas research. The importance of research for national security was heavily emphasized. It was at this time that the argument for a retaliatory stockpile as a *deterrent* first took shape. Whittmore (1975) also indicates that chemists defended the humanity of gas warfare citing battlefield casualty statistics which indicated that the survival rate of soldiers suffering gas wounds was twelve times that of those suffering from conventional weapons (Gilchrist 1928). In the ultimate defense of chemical weapons, Lewis (1922) argued that, "It is the most efficient, most economical, and most humane, single weapon known to military science" (Lewis 1922, p. 840). Additionally, the strategic value of poison gas was emphasized. As one high-ranking military officer put it, "The wound-producing weapon has a greater strategic value than the one which kills outright" (Gilchrist 1928, p. 149). The argument given is that a dead soldier could be left, while a wounded solder absorbed extensive resources. Arguments such as these were obviously

instrumental in gaining support for the Chemical Warfare Service. However, the majority of military and political leaders, as well as the general public, retained an aversion to the idea of waging chemical warfare.

During WWI, research and development were oriented to producing more effective delivery means. Additionally, the use of gas masks soon proved to be standard necessary battlefield equipment. Brown (1968) observes that the Allies naively assumed that once the troops were masked they were safe. On July 12, 1917, this situation drastically changed. The Germans unleashed mustard gas, again in a surprise attack at Ypres. Mustard gas was particularly dangerous because it could disable by coming in contact with the skin; hence, the masks were of no use against mustard. Its effects did not surface for sometime later, sometimes hours, at which point it was too late. Moreover, mustard gas was persistent and could, under favorable conditions retain its debilitating properties for several weeks.

Recently, military thinking has changed regarding the strategic value of chemical weapons. Some experts argue that their *unpredictability* (i.e., their dependence on the correct meteorological and topographical conditions) makes them less than ideal. As one high-ranking Pentagon official put it, "Chemical weapons are very inefficient weapons'' (Personal Communication: Army Official 7/29/91).

The Second World War saw the creation of a new and deadlier form of poison gas, i.e., the nerve agents, commonly known as "nerve gas.'' German scientists discovered nerve agents while conducting research on pesticides to which nerve agents are chemically related. Briefly, nerve agents are organophosphate esters and are not really gases at all. Actually, the word

"gas" in this context is a misnomer. They are odorless, colorless liquids and are usually dispersed as vapor. They can be lethal either through inhalation or through skin absorption, making gas masks necessary but not sufficient protection. The first agent to be developed was (GA) Tabun, later GB (Sarin) and VX ("V" is for venom) were developed. The U.S. unitary stockpile contains both GB and VX, which are two of the most lethal agents known to exist. VX is said to be orders of magnitude more toxic than the most potent pesticides.

Without fanfare and without public scrutiny, the United States CW program expanded during the 1960s (Hayes Holgate 1990). It was directed by the Army Chemical Corps (ACC). The ACC launched a public relations campaign to bolster support for continuing chemical/biological weapons (CBW) research and funding, again citing the superior Soviet threat. A new modernization program was proposed in which binary weapons---supposedly safer to produce and destroy---would supplant the existing, obsolete unitary stockpile. By the seventies, binary weapons research/production was in full swing at the Pine Bluff Arsenal, Pine Bluff, Arkansas. Binary weapons, which contain precursor chemicals which mix upon firing, were thought by the Army to be the answer to a prayer because they answered many of the arguments posed by environmentalists and they could be portrayed to the public as "safer;" i.e., easier to store and destroy. Hayes-Holgate (1990) reports that "The ACC lobbied vigorously, aware that without production of binaries, its very existence was in question. Its efforts finally resulted in Congress writing initial funding for a binary factory in the 1980 Department of Defense Authorization Bill" (Hayes Holgate 1990, p. 19). The U. S. produced a reported 69 tons of binary shells before halting production in 1990 (Morrison 1991).

1.7 History of Chemical Weapons (CW) Destruction

Prior to 1969, obsolete or unserviceable chemical agents and munitions were routinely disposed of by open pit burning, land burial, atmospheric dilution or ocean dumping. These disposal methods were used extensively dating back to World War I without any casualties or adverse public reactions (Rogers 1990). At one time, even nuclear detonation was considered by the Army; however, that plan was abandoned on the advice of the National Academy of Sciences who studied the problem of disposal of chemical weapons. The Ad Hoc Committee stated in their report that

> burying of the clusters in a deep cavern, followed by the explosion of a small nuclear device there, could incinerate and detoxify the clusters. However, the hazards involved in various states of this operation and the time required for its completion make this an undesirable plan (National Academy of Sciences 1969, p. 5).

Another popular disposal strategy involved draining chemical agent from weapons, called, "Drill and Transfer." The Drill and Transfer System (DATS) was first used in 1979 at an Army facility in Utah where sixty munitions were demilitarized with no apparent consequences (Riddell 1981). Later in 1981, the Army proposed bringing in a DATS to the Lexington-Blue Grass Army Depot (LBAD) to dispose of 114 unserviceable rockets containing nerve gas and mustard agent. Basically, the DATS is similar to a semi-trailer. It's mobility makes it very useful for this type of operation. The trailer is set up in a secure area of the depot to insure the safe transfer of chemicals and explosives contained inside each rocket. Once a rocket is secured inside the DATS, machinery will drill a hole in the rocket casing to drain out the chemical agents and then detach the explosive apparatus from the rocket.

According to the Army, the chemicals will be processed into relatively harmless salts and stored. Explosives will be taken to a secure part of the depot and detonated.

Open pit burning was another popular destruction method. Between 1949 and 1965, the Army got rid of mustard-gas projectiles stored at the Lexington Blue-Grass Army Depot by throwing them in a hole and setting them on fire (*Lexington Herald Leader*, November 26, 1984). According to this same article, the open burning of chemical weapons that took place in this country was not publicized.

In the 1950s, Great Britain decided it wanted out of the nerve-gas business and began eliminating their entire stockpile by burning it in pits and sinking it in ships. The argument for this method was that it released a very small amount of toxic material into the atmosphere which "simply dissipated," according to Brad Roberts, an analyst for the Center for Strategic and International Studies at Georgetown University in Washington, D.C. (*Lexington Herald Leader*, November 26, 1984).

Following Britain's lead, and unhappy with the slow progress in disposing of unusable chemical weapons stockpiles, the Army devised a plan (1948) to dispose of unserviceable chemical weapons by dumping them at sea. "Sea dumping had been accomplished previously, but before this time, munitions were generally loose dumped from barges," an Army document explains (CSDP Chemical Weapons Movement History Compilation 1987, p. 10). However in this case the Army decided to fill a World War II merchant ship, load it up with chemical weapons, haul it out to sea and scuttle it. This work was assigned the code name, "Operation Geranium" (Lewisite has an odor like Geraniums). Although the Navy's use of code names fell into

disuse, the Army revived the practice in the early 1960s. The name that eventually came to apply to the planned sea dump of the 27,000 tons of unitary chemical weapons was code named, "Operation CHASE." CHASE was a U. S. Navy acronym for "Cut Holes And Sink 'Em." The Navy had been sea dumping conventional high explosive ammunition at sea. One series of these dumps were known as the CHASE dumps. The first chemical weapons CHASE dump, was made in May/June 1967. The material dumped was bulk mustard ton containers and GB filled M55 rockets. The rockets were placed in steel vaults which were then filled with concrete. These "coffins," as they were called later, were placed aboard a merchant hulk (the S. S. Corporal Eric Gibson) and then sunk in deep water off the continental shelf. The second CHASE operation involving chemical weapons took place in May-June 1968; the third involving chemical weapons took place in June of 1968. The cargo in this case was one-ton containers contaminated with mustard and filled with water. In 1969 the Army planned the ocean dumping of some 27, 000 tons of unserviceable chemical weapons that made up the unitary stockpile. The plan involved the disposal of unserviceable chemical/biological weapons (CBW) stored at Rocky Mountain Arsenal, CO., Edgewood, MD., Anniston, AL.,and Richmond, KY. The weapons were to be encased in concrete "coffins" (similar to earlier CHASE operations) each weighing roughly six and a half tons. They were to be transported by rail to Earle, New Jersey (the route being kept secret), and then loaded aboard four surplus WWII Liberty ships, towed out to sea and sunk 250 miles off the New Jersey shore beyond the continental shelf at longitude/latitude 39^0 38'N; 71^0 0'W. In previous CHASE operations conducted between 1967 and 1968 a total of 1,706 such "coffins" were sunk in a similar location. However, the 27,000

tons in question were to be dumped at sea at a depth of 15,000 feet, twice the depth of previous disposals.

According to reports, the Army tried many ways to free the containers from the concrete before considering another ocean-dumping scenario, including trying to neutralize the gas through openings. They tried soaking the concrete in highly abrasive acids. This failed. Then the Army tried using diamond saws to drill into the concrete but abandoned this plan because of fears that the saws would set off detonators in the warheads. Next, they tried baking of the concrete to what the Army said would be a point where it would crumble and slip away. The concrete didn't budge. Col. Jack Curry (1970), then commander of the Lexington-Blue Grass Army Depot, concluded, "The most logical way of disposing of the gas is still the sea dump'' (Powell 1970).

Experts acquainted with the process, however, warned that the concrete would erode over a long period of time, and at some distant time, the containers themselves would erode away causing small amounts of nerve gas to leak into the ocean. In response to objections raised by environmentalists on this very issue, Dr. Conrad Cheek, veteran oceanographer, said in Washington that if 66 tons of nerve gas to be ocean dumped were released in water at the same time only two ounces of it would be toxic in ten days (Powell 1970).

However, when the news broke about operation CHASE and the public learned of the plan to dump 27,000 tons of chemical weapons in the ocean, a great hue and cry went out from many quarters in protest. First, citizens protested transporting the lethal weapons through their communities. The Army assured critics that it had moved large quantities of chemical weapons over many years with relatively few problems and pointed out that "there has

never been a chemical accident fatality associated with such movement'' (CSDP: Chemical Weapons Movement History Compilation, 1987, p.1). Environmentalists questioned the wisdom and the ethics of dumping toxic chemicals in the ocean, and the Council on Environmental Quality (CEQ), the agency set up to monitor compliance with the newly-framed National Environmental Policy Act (1969) NEPA, also raised objections.

To begin with, Carter (1970) observed that "the Army's Impact Statement minimized the possibility of major environmental damage resulting from Operation CHASE'' (1970, p. 1298). Next, the Council on Environmental Quality (CEQ) disputed the Army's claim that "the resulting toxicity of the sea should be highly localized'' (Ad Hoc Advisory Committee 1969, p. 10). The Army claimed that there was very little marine life at the 16,000-foot depth and no fish of commercial value. However, the Council countered by stating that present knowledge of sea life at that depth was incomplete and listed several examples to support their case. For example, the CEQ argued that: (1) carnivorous fishes are found at that depth; (2) there are numerous deep-water fish whose eggs rise to or near the surface; (3) many organisms make seasonal migrations from shallow to deep waters and from coastal to deep waters; and (4) flounder, which occur in shallow waters off the Southeastern coast of the U.S., migrate into deeper waters in winter. (Ad Hoc Advisory Committee 1969). Finally, the National Academy of Sciences suggested that ocean dumping be abandoned and suggested chemical neutralization[2] of nerve agent GB and incineration of the vesicant agents H and HD. Incineration of hazardous waste was an emerging technology at that

[2] The term "neutralization'' is used in the generic sense to mean a chemical reaction that counteracts the toxic effect of the chemical agent, yielding an innocuous product (FPEIS, 1988, Vol. 3, p. D-3).

time and was thought to be an environmentally benign method capable of completely destroying waste materials (Flamm et al, 1987). Part of the Academy's report read:

> We wish to suggest to the Department of Defense (DOD) that it adopt basically the same approach to chemical warfare agents and munitions that the Atomic Energy Commission has adopted toward radioactive waste products from nuclear reactors. It should be assumed that all such (chemical warfare) agents and munitions will require eventual disposal and that dumping at sea should be avoided (Ad Hoc Advisory Committee 1969).

In August of 1970, Congress finally called a halt to ocean dumping (CSDP: Chemical Weapons Movement History Compilation, 1987).

1.8 Overview: The Creation of the Chemical Stockpile Disposal Program (CSDP)

In the early 1980s, the Army appealed to Congress for funds to proceed with a new generation of Chemical Weapons---binary weapons, which they claimed were safer to store and destroy. This modernization program was necessary, they argued, because the unitary stockpile was obsolete and deteriorating and no longer represented a credible deterrent. Congress required the destruction of the unitary stockpile as a *quid pro quo* for funding binary weapons research. The Army informed Congress that it could destroy the stockpile by 1994, at which point Congress then set the Army's self-imposed deadline into law. Congress then created Public Law 99-145, *The Department of Defense Authorization Act of 1986*, which mandated the destruction of the entire unitary stockpile by September 1994 in conjunction with the acquisition of binary weapons. This sequence of events is significant because the Army has used the Congressional mandate many times to

conjure up an image of the "absolute" necessity of destroying the stockpile quickly because of some arbitrary deadline imposed by Congress. In fact, Congress was simply responding to what they were told by the Army. The original timetable for the destruction of the unitary stockpile has been revised several times at the behest of the Army (see Table 2.1 for destruction schedule by site). For example, in September 1988, the Army received an extension from Congress of the 1994 deadline to April 30, 1997; however, the final date for the destruction of the stockpile has been extended to approximately the year 2004.

Initially, the stockpile destruction effort was to have been limited to the M55 rockets, but Congress and the Army expanded the program to include other obsolete weapons as well. According to a background paper prepared by the Office of Technology Assessment (OTA 1992), the M55 rockets are considered the most dangerous items in the current stockpile, since the M55 is a fully assembled munition containing either agent VX or GB, along with fuses, burster charges, and propellant in a configuration that cannot be easily separated.

The M55s were produced during the 1960s in groups known as "lots." During one short period of manufacture, some M55s were filled with a GB agent which had purity specifications. According to the FPEIS (1988) "these lots have leaked far more frequently than others" (FPEIS, 1988, p.2-9) and, for this reason, the Army monitors them very carefully. Fortunately, the Office of Technology Assessment (OTA) report indicates that "the Army's monitoring program has yet to identify trends of increasing deterioration" (OTA, 1992, p. 5). Nevertheless, the M55's have been the focus of major concern since the beginning of the stockpile disposal program. The GB-filled

rockets were manufactured at Rocky Mountain Arsenal, Colorado, between 1961 and 1965, and the VX rockets were manufactured at Newport Army Ammunition Plant, Indiana in 1964 and 1965. The M55 was shown to be erratic and undependable, and the Army declared it obsolete in 1981 (Army Independent Evaluation/Assessment of Rocket, 115mm: Chemical Agent {GB or VX} M55).

The Congressional law that created the stockpile destruction program is known as Public Law 99-145, i.e., the *Department of Defense Authorization Act, 1986.* The Act reads:

> (1) Notwithstanding any other provisions of law, the Secretary of Defense (hereinafter in this section referred to as the "Secretary") shall, in accordance with the provisions of this section, carry out the destruction of the United States' stockpile of lethal chemical agents and munitions that exists on the date of the enactment of this Act. (2) Such destruction shall be carried out in conjunction with the acquisition of binary weapons.
> (PL99-145, p. 99 STAT.747)

The law further stipulates that: (1) The Secretary shall provide for:

> (A) maximum protection for the environment, the general public, and the personnel who are involved in the destruction of the lethal chemical agents and munitions referred to in subsection (a); . . .(2) Facilities constructed to carry out this section may not be used for any purpose other than the destruction of lethal chemical weapons and munitions, and when no longer needed to carry out this action, such facilities shall be cleaned, dismantled, and disposed of in accordance with applicable laws and regulations. (PL 99-145, 1985 p. 99 STAT.747)

However, studies have been commissioned to study the feasibility of the continued use of the incinerators once the stockpile is destroyed. To begin with, the 1984 National Research Council (NRC) study, alluded to earlier, actually suggested "that the life-cycle costs of incinerators could be substantially reduced if after destroying chemical weapons they were used by federal, state, and local governments and private industry to dispose of hazardous wastes" (C & E News, August 13, 1990, p. 15). Additionally, in November 1989, the House and Senate Appropriations Committee of Confereers[3] directed the Army "to investigate and report on the feasibility and desirability of using chemical weapons disposal facilities for other purposes" (Goldfarb, 1991, p. xv), leading citizens to speculate that the facilities will never be dismantled for a variety of reasons, not the least of which is the cost involved in construction and the enormous backlog of hazardous waste produced by the military. When questioned about the possibility of the "future use" of the incinerators, a high-ranking government official assured the author that the incinerators would be dismantled "Pac Man style" .

Finally, a study, conducted by the MITRE Corporation (1991) entitled, "Engineering Analysis for Future Use of Chemical Agent Demilitarization Plants: Feasibility and Desirability," suggested numerous possibilities for the future use of the facilities given certain reconfiguration requirements, but emphasized that "in order for the chemical demilitarization facilities to be

---

[3] Title VI of the 1990 Defense Appropriations Conference (DAC) Report 101-345, entitled "Chemical Agents and Munitions Destruction, Defense."

used for other non-stockpile chemical items. . . the law would have to be changed'' (Goldfarb, 1991, p. 2-5). This, in fact, is exactly what the citizens fear--a permanent hazardous waste facility in their midst that will operate in perpetuity.

Public Law 99-145 also authorized the creation of a management organization within the department of the Army to oversee the destruction process. "The Department of the Army, as executive agent for the DOD, established the Program Manager for Chemical Demilitarization (PM Cml Demil) as the agency responsible for implementing the disposal program'' (Carnes1989, p. 280). Initially, a Program Manager for Chemical Demilitarization was appointed to head the program. Recently, a new federal agency has been created i.e., the United States Army Materials Destruction Agency, headquartered at Aberdeen Proving Ground, Edgewood, Maryland and headed by Brigadier General Walter Busbee. This agency is charged not only with oversight for the CSDP but also is responsible for directing the destruction efforts of other weapons and munitions not directly related to the unitary stockpile. This expansion of the program scope to agency level is certain to have ramifications beyond the destruction of the unitary stockpile and does not bode well for those who fear that the incinerators will be used beyond the destruction life cycle.

1.9 The Army Decides: The Evolution of Incineration as the Technology of Choice

With the suspension of the planned sea dump, the Army requested the National Academy of Sciences (NAS) to conduct a study of alternatives. In 1982, the Undersecretary of the Army, James Ambrose, asked the National Research Council (NRC) for a study to recommend the most effective,

economical and safest means for disposing of the Army's unitary chemical weapons stockpile. A committee was formed under the Board on Army Science and Technology in 1983. According to a memo obtained from the Kentucky Environmental Foundation, this was the first non-governmental group to study the chemical weapons situation since the National Academy of Sciences Report (NAS) in 1969 (KEF Memorandum, 1/4/92).

According to the Deputy Program Manager and Technical Director, "the Academy said, 'You need to build complex industrial type disposal facilities for each site.' The Army said, 'OK.'" Following the NAS report, we are told that "the Army launched an extensive program that involved the development of new disposal concepts and process technology" (Army Public Affairs Officer: No Date). Under the Academy's new guidelines, Rocky Mountain Arsenal became the the first site to dispose of nerve agents through neutralization. A knowledgeable Army technical expert boasted that the Army had disposed of "over nine (9) million pounds of GB and over six (6) million pounds of mustard through incineration" at the Rocky Mountain Arsenal (RMA) facility.

However, neutralization was found wanting. As the Deputy P M and Technical Director for the CSDP explained: "We were not pleased with neutralization," he said,

> We created six lbs. of organic waste for every one lb. of organic material we destroyed. We were adding too much junk. We felt that we were producing too many impurities. It [agent GB] was too easily reformed. If conditions were not carefully controlled it would revert. Primarily for those reasons we decided we had to look at alternatives.

The rationalization for abandoning neutralization was based on a number of perceived factors according to a document prepared for Greenpeace

International: (1) The alleged complexity of the neutralization process as compared with incineration which was emerging as the preferred industrial technology; (2) the sensitivity of the process to numerous parameters that would slow the reaction or even promote hydrolysis reversal, reforming GB; (3) the quantity and nature of the waste; 4) the high capital costs of neutralization (at this time, incineration was regarded as a simple and cheap process) and various cost calculations showed a net cost benefit if incineration were to be adopted (Picardi 1991). For these reasons, in March of 1981, the Army officially decided to abandon neutralization and adopt incineration as the method of choice for the destruction of chemical weapons. According to Picardi (1991) "the decision was highly influenced by early drafts of the National Research Council (1984) report'' (Picardi,1991, p. 6).

The Army already had a test incineration facility in Tooele Army Depot near Salt Lake City, Utah, which had been in operation since 1979---the Chemical Agent Munitions Disposal System (CAMDS). Experimental thermal destruction of agents began around 1981 at this facility. CAMDS was a high-temperature incinerator facility specially designed to handle nerve agents. It was a prototype, (one-third size) not a full-scale facility. The CAMDS incineration technology is the model for the entire CW disposal program, but the facility has experienced numerous problems. For example, in May of 1986, a drain clogged, causing a chemical agent to overflow to the floor of a containment area and again in January 1987, nerve agent escaped into a work area. The release exceeded health standards but was not reported to the public for two days. The Army boasted that it had disposed of over six million pounds of chemical agents and over sixty thousand munitions and containers by incineration at the CAMDS and at the Rocky Mountain Arsenal

(RMA). However, the facility has experienced numerous problems. The Army did finally admit to a "simultaneous failure of three containment systems'' (*Courier Journal*, September 12, 1984, p. 1).

When Amoretta Hoeber, then Under Secretary of the Army, spoke at a public meeting at Eastern Kentucky University in January of 1986, she assured those assembled that no decision had been made regarding the ultimate disposition of the chemical weapons stored at the Army depot at LBAD, despite mounting evidence that the Army had already decided upon thermal destruction. "We're not here to announce any sort of a decision,'' she said, "No decision has been made'' (Transcript of Public Meeting EKU, Richmond, KY. January 1986, p. 4). After the publication of the Draft Environmental Impact Statement (DEIS) in July of that same year, which announced incineration of the weapons as the "Preferred Alternative,'' the Secretary of the Army John O. Marsh, Jr. repeatedly stressed that the July 1 Draft was not necessarily the final word. "I am not here to speculate on what the final decision will be,'' he said, "I am here to tell you that the Army has simply presented a preferred alternative. It is not fair to the process to speculate on what might be the results'' (*Lexington-Herald Leader*, July 10, 1986, p.1).

Throughout the *process*, citizens have been wary of the Army's attempts to garner support from allegedly "objective'' scientific bodies in support of its decisions. For example, the National Academy of Sciences (NAS) study conducted in 1984 concluded that: "The Army has already selected thermal destruction as the most appropriate method. The committee supports this decision'' (Memorandum: Kentucky Environmental Foundation, Inc. {KEF} January 4, 1992). The exact wording of the National Research Council report reads:

> When compared to disposal by incineration, chemical neutralization processes are slow, complicated, produce excessive quantities of waste that cannot be certified to be free of agent, and would require higher capital and operating costs. The panel agrees with the Army's decision to abandon chemical neutralization in favor of incineration. (*National Academy of Sciences Study*, November 1984)

The Deputy Program Manager (PM) and Technical Director for the Chemical Demilitarization (CHEM) program explained it this way: He said that the Army was pleased with the results of their experiments and went back to the National Research Council in 1984 to see "if we [the Army] were doing the right thing." He then added, "The NRC endorsed our decision to destroy both nerve agents and mustard; in 1986, Congress asked us to destroy the whole stockpile" (4/24/92). It is just this endorsement of existing policy by supposedly "objective" scientific studies that has continually rankled citizens who oppose the Army's current destruction plan.

Recently, a statement appeared in the Preface to an Army publication, entitled, *STAR 21: Strategic Technologies for the Army of the Twenty-First Century*, which seems to lend credibility to the charge that Academy of Sciences (NAS) and the National Research Council (NRC) may not be the objective scientific bodies that they claim to be. In the book we read the following: "The National Academy of Sciences, the National Research Council, and the STAR Study Committee wish to acknowledge their indebtedness to the U.S. Army for its continuous and generous support and encouragement throughout the STAR study" (National Research Council 1992). This "continuous and generous support" also extends to the copious funds made available to the NAS and the NRC for evaluation of the CSDP.

Nevertheless, despite the ample evidence that the Army had already made up its mind concerning the choice of technology, no "official'' decision was released until Secretary Ambrose's formal declaration in 1988, i.e., the Record of Decision (ROD) which recommended the on-site destruction alternative and thermal destruction of the stockpile. According to reports, Ambrose preferred not to use the word "decision'' feeling more comfortable with the idea that it was more of a "judgment call,'' because a decision implied to him something based on "quite definitive information, factual information, well quantified, by logical process or algorithm of some kind to get from input to the output'' (Carnes 1989, p. 445) Instead, he said the decision was based on "a lot of highly uncertain material. . .It was a judgment call'' (Carnes 1989, p. 445).

1.10 Description of the "Baseline Technology''

The Army's current plan which calls for the weapons to be destroyed on-site in specially-designed high-temperature incinerators, is known in the literature as the "baseline technology.'' Quite simply, this refers to the Army's decision to designate *incineration* as the technology of choice. It is essentially a reverse-assembly process, whereby munitions will be automatically disassembled and drained of chemical agents by computer-controlled machines before being fed into the incinerator/s. At this point we find it necessary to make a clarification. We read that the Army's plan, i.e., the Chemical Stockpile Disposal Program (CSDP) calls for siting eight incinerators on Army depots around the country, but in reality we are not speaking about one incinerator at each site, but an incinerator *complex.* The baseline technology involves constructing an incinerator complex at each

depot site --- each with up to four separate incinerators to complete the process of destruction of the unitary weapons. Andy Mead reporting on the Army's plan in 1986 wrote, "The 'nerve gas incinerator' the Army proposes to build in Madison County {Kentucky} would, depending on how you count them, be four or eight incinerators" (*Lexington-Herald Leader*, July 2, 1986, p. A-14). One type would be used to burn only liquid nerve agent that has been drained from weapons or stored in ton containers (the liquid incinerator); another would burn the metal parts (the metal parts furnace); another would burn the explosive parts of rockets (the deactivation furnace) ; and a fourth would burn contaminated packing material, wooden pallets and used protective clothing (the dunnage incinerator system) (Department of the Army, U. S. FPEIS 1988, Volume 3, p. C-12).

A report drawn up by Greenpeace, long-standing opponents of incineration technology, states that "the extremely high temperatures at which the incinerator chambers operate, ranging from 1,600 degrees to 2,700 degrees F, place stresses on the hardware and require constant monitoring and frequent maintenance," and it questions the ability of the incinerators to meet the rigid 99.9999 per cent "destruction and removal efficiency" standards set by the federal government, except perhaps in one-time trial burns. (Seigel, Draft, 1990). The Greenpeace document asserts that, "Commercial hazardous waste incinerators have suffered serious accidents. At the CW disposal sites, an accident would be catastrophic" (Seigel, Draft, 1990, p.8).

1.10.1 Cryofracture

As a more cost-effective alternative to the "baseline" technology, a process known as "cryofracture," was suggested by the Army in 1986.

Cryofracture, in which munitions are first frozen, smashed and then burned, was considered an alternative to the "baseline" technology of disassembly for the destruction of the chemical weapons. The Army's original enthusiasm ended in 1989 when work on this technology was terminated. The Army's reluctance to aggressively pursue a cryofracture program was based on its strong belief in the viability of the baseline technology. Opponents of cryofracture do not see it as an alternative, since it still uses incineration technology. As of May 1995, the cryofracture program is defunct according to the Director of the Kentucky Environmental Foundation (Telephone interview: 5/4/95).

1.11 JACADS (Johnston Atoll Chemical Agent Disposal System)

In 1985, when Congress approved the program, the Army began to design a versatile, full-scale reverse assembly and incineration system on a small island in the South Pacific, approximately 717 nautical miles southwest of Hawaii. The facilitly is known as the Johnston Atoll Chemical Agent Disposal System or (JACADS). It is three times the size of the Army's stateside facility at Tooele, Utah known as CAMDS (The Chemical Agent Munitions Disposal System). The JACADS project is administered by the Army's Program Manager for Chemical Demilitarization (PM Cml Demil).

The operations manager and maintenance contractor is the United Engineers and Constructors, Inc. In December 1987 Congress required that the Army evaluate full-scale disposal operations at JACADS before constructing similar facilities in the continental United States. Congress wanted proof that the baseline process at the JACADS facility was safe and environmentally sound before it permitted construction and operation of similar facilities at

the continental U.S. sites. Operations Verification Testing (or "OVT'') was begun in October 1989 and testing concluded on March 6, 1993. A report on OVT was published in May 1993; the Secretary of Defense certified successful OVT completion to Congress on August 25, 1993 (Annual Status Report: DA, December 15, 1993, p. iv). The JACADS facility has experienced numerous technical difficulties and has experienced extensive down time. As of this date (May 1995) JACADS continues to have problems. So far there have been four live agent releases. However, they were only fined for one because it exceeded "acceptable levels.'' (Interview: 5/4/95 activist). Thus far they have been assessed fines totalling $175,000 for numerous environmental violations.

Before the certification to Congress can be made, the Army has to take JACADS through four separate campaigns. The first is the disposal of the M55 rockets containing GB. The second is disposal of M55 rockets filled with the persistent nerve agent VX. The third phase is disposal of bulk containers containing mustard agent. The final phase is the destruction of mustard gas artillery shells. The MITRE Corporation was selected to prepare criteria for the evaluation of OVT, to perform the evaluation, and to prepare a report on the results (Menke 1991). The report cited numerous mechanical problems resulting on one occasion in live agent being released into a worker area, failure to meet production schedules, and sited frequent worker turnover (averaging about 45 per cent per year) as a continuing problem. However, the MITRE Corporation report asserted that, "taken as a whole, the GB campaign did show that the basic JACADS technology is safe, can be operated within environmental limits, and is capable of operation for at least short periods at close to the projected rates'' (Menke, 1991, p. 4-9). Supposedly, "lessons

learned'' from JACADS will be applied to the construction and operation of the continental United States (CONUS) facilities.

1.12 Geography and Distribution

The chemical weapons (CW) stockpile is located on eight Army bases around the country (see figure 1.1, Appendix A), and at Johnston Atoll, a small island in the South Pacific. The distribution of the stockpile is given in Table 1 of Appendix B.

1.13 Agent Characteristics

The unitary chemical weapons stockpile under consideration, consists of both nerve and vesicant or blister agents. Nerve agents were discovered by German scientists while conducting insecticide research during the Second World War.[4] The organophosphate nerve agents include GA ("tabun''), GB ("sarin''), and VX ("V'' stands for "venom''). These agents are among the most deadly chemicals known to exist. VX for example, is said to be orders of magnitude more potent than the most toxic insecticide to which they are chemically related. GB, also known as Sarin, vaporizes instantly. When inhaled it can kill in a minute. A document prepared by Greenpeace states that "The explosion of an artillery shell containing 6 pounds of GB will kill most unmasked personnel within an area the size of two football fields'' (Seigel, Draft 1990, p. 7). Additionally, nerve agents can also be absorbed through the skin, so donning a gas mask is necessary but not sufficient to protect a person from exposure. It has been found that in comparison with GB human exposure estimates, VX is estimated to be approximately twice as

[4] Tabun was discovered in 1936 by an I.G. Farben chemist.

toxic by inhalation, 10 times as toxic by oral administration, and approximately 170 times as toxic following skin exposure (National Research Council 1984).

The nerve agents are all organophosphate esters that directly affect the nervous system. Their mechanism of action involves the inhibition of acetylcholinesterase (AChE), an enzyme that prevents the accumulation of the neurotransmitter acetylcholine (ACh). After exposure to nerve agent, AChE is inhibited and ACh accumulates; at high doses, the results are convulsions and death due to paralysis of the nervous system (FPEIS, 1988). As acetylcholine (ACh) builds up at the nerve endings, death comes in seconds. Watson (1989) writes:

> When ACh accumulates, the following symptoms can result: drooling, increased bronchial (lung) secretions, bronchoconstriction, miosis (pupillary constriction), excessive sweating, vomiting, diarrhea, abdominal cramping, involuntary urination, and heartbeat irregularities (arrhythmias) (Watson 1989, p. 337).

In addition, "ACh accumulation can affect the brain and spinal cord, resulting in headache, anxiety, confusion, restlessness, giddiness, (EEG) changes, or even convulsions and coma, depending on the agent and dosage'' (Grob and Harvey 1953). In relative terms, VX is more toxic and GB, which, in turn is more toxic than GA (soman). Watson (1989) argues that "because agent GB is highly volatile, an unplanned release could disperse toxic concentrations over a large area. With the less-volatile agent VX, toxic concentrations would not disperse widely , but could persist in the environment long after an unplanned release'' (Watson 1989, p. 337). However, in terms of emergency response, an accident involving agent GB

would present the most problems because it has the potential to affect a wider area.

The mustard or "blister agents'' in the stockpile include H, HD and HT. as well as small quantities of Lewisite (L) which are held for research purposes. The major toxic chemical [bis (2-chloroethyl) sulfide] in both H and HD is also known variously as (1) as mustard gas, or (2) sulfur mustard, or (3) simply "mustard.'' According to Watson (1989), vesicants are cellular poisons that destroy individual cells in target tissues. Accordingly, the vesicants present quite a different picture of acute toxicity when compared with nerve agents. For example, the vesicants are not as acutely lethal at similar low doses as are the nerve agents under comparable exposure conditions (Watson 1989).

In an article which appeared in the "Bulletin of the Atomic Scientists,'' Freeman (1991) describes mustard gas---"as a kind of 'jelly' which is extremely toxic both as a liquid and as a vapor, causing severe eye injury as well as skin burns on all parts of the body, but especially the genitals, underarms, and tender skin of the joints, hands, and face'' (Freeman, 1991, p.34). The effects of mustard, especially the vapor effects on skin, rise sharply with temperature. Mustard gas can also cause severe systemic effects such as vomiting, prostration, and even death. Mustard gas is especially pernicious in that its effects appear several hours after exposure. Although not as lethal as the nerve agents, the mustard agents have properties that make contact with them extremely hazardous, not the least of which is the fact that they are proven carcinogens. Watson (1989) writes that, "Epidemiological evidence and results of animal studies both indicate that mustard agent can cause cancer'' (Watson 1989, p. 342). Freeman (1991) reports that, "in 1980, the U.S.

Department of the Army asked the National Academy of Sciences to study the long-term effects of exposure to chemical-warfare agents for 6,720 soldiers who participated in experiments at Edgewood Arsenal from 1955 to 1975. The resulting report mentions a statistical correlation between chronic mustard-gas exposure and cancer'' (Freeman, 1991, p.38). Mustard gas has also been known to produce various kinds of chromosomal structure damage, and its mutagenic properties have been demonstrated in laboratory studies (Fox and Scott 1980).

1.14 The Political Economy of Chemical Weapons Destruction

The political economy of hazardous waste disposal and that of the destruction of chemical weapons are related phenomena. In this section we will provide an overview of the emerging political and economic factors that provide the context for the Chemical Stockpile Disposal Program (CSDP).

1.14.1 Life Cycle Cost

The sheer scope of the stockpile disposal program makes it a fit object for study. To begin with, there have been massive cost overruns. In 1985, the Army estimated the total cost of the disposal program would be $ 1.7 billion; "by 1992, the projected life-cycle cost of the CSDP had jumped to $8 billion---a nearly five-fold increase in seven years'' (Opening Statement: Mike Synar {D-OKLA.} Congress of the U. S., June 16, 1992). In 1993, the Army reported that "As a result of program schedule extensions encountered in FY 1993, the estimated life-cycle cost has increased again, this time to $8.6 billion'' (Annual Status Report, DA, 1993, p. 22). Costs continue to escalate as of this writing, for example, the total cost of JACADS has soared in just three years from $298

million to $587 million and continues to grow (Department of Defense Authorization Bill, 1992, p. 233).

Although the Army is coordinating and directing the disposal program, the facilities will be designed, constructed and operated by commercial contractors who stand to profit even further if PL 99-145 is amended to allow the facilities to be reconfigured to process other hazardous waste. Although the Deputy Program Manager (PM) and Technical Director for the CSDP assured the author that "the Army is not going into the *hazmat* {i.e., hazardous materials} business," there is nothing to prevent them from turning around the selling the incinerators back to the very people who are profiting in their construction (Memorandum: Common Ground, April 1992).

Although we have some information on who the major contractors are, e.g, "the Ralph M. Parsons Company of California is the designer of the facilities and CH_2M Hill, Inc. has assisted in permitting to date" (Interview: Deputy PM for CHEM DEMIL, April 24, 1992). There are innumerable other contractors involved in the construction aspect of the program, many of whom are former defense contractors, e.g., Bechtel National, Inc.; Raytheon; (M.K.) Morris-Kinutzen; A.J. Little; MITRE Corp., to name only a few. Information regarding the bidding process is not available to the public, although it is not, strictly speaking, "classified" information. However, the Deputy PM and Technical Director declined to release that information when asked commenting that it would be "bad business."

The number of federal, state and local agencies involved with the chemical demilitarization program is staggering. The Chemical Stockpile Disposal Program (CSDP) which, for the sake of brevity, is often referred to as

the "demil" program (the term "demilitarization" meaning --- to render unusable for any military purpose), involves not only top military officials at the Pentagon, but several federal agencies including: (1) the Department of Defense (DOD); (2) the Federal Emergency Management Agency (FEMA); (3) The U.S. Army Toxic and Hazardous Materials Agency (USATHMA); (4) the Occupational Health and Safety Association (OSHA); (5) the Environmental Protection Agency (EPA); (6) the Department of Health and Human Services (DHHS); and last but not least (7) the Department of Energy (DOE). In addition, some of of the nation's most prestigious national laboratories are involved with the CSDP, e.g., Los Alamos National Laboratory (NM), Argonne National Laboratory (IL), Sandia National Laboratory (NM), Lawrence Livermore National Laboratory (CA), Pacific Northwest National Laboratory, and the Oak Ridge National Laboratory (TN). Additional support is provided by *their* subcontractors around the country, such as Schneider Engineers, Harrisburg, PA; Dynamac Corporation, Rockville, MD, and Westinghouse Corp. The usual procedure is for the Army to award a contract to a national laboratory, e.g., to assist in the preparation of Environmental Impact Statements (EISs). The laboratories in turn subcontract out certain parts of the projects. For example, the subcontractor might collect data relevant to population of schools, hospitals, nursing homes, etc.

Many colleges and universities around the country are involved with the CSDP, among them are the following: University of Pittsburgh, University of Southern California {Institute of Safety and Systems Management}, University of Colorado, University of Delaware, Michigan State University, Massachusetts Institute of Technology (MIT), University of California at Los Angeles and Northern Illinois University.

Additionally, numerous environmental laws impact this program. The most famous of these is, of course, NEPA, the National Environmental Policy Act (1969); then there is RCRA, the Resource Conservation and Recovery Act (1976), the National Toxics Control Act (1976) and, finally, the Clean Air Act of 1970 (as amended). In addition to these, a number of other laws have been passed through the years that deal specifically with chemical weapons disposal; they include: (1) the *Department of Defense Authorization Act of 1986* (Public Law 99-145) which mandated the destruction of the unitary CW stockpile; (2) the *National Defense Authorization Act for Fiscal Year 1988 and 1989* (Public Law 100-180) in which Congress directed the Secretary of Defense to issue the final Programmatic Environmental Impact Statement on the chemical stockpile destruction program by January 1, 1988. The law further required that the Secretary provide proof in writing to Congress that the overall concept plan included an evaluation of alternative technologies and full-scale operational verification tests of the selected chemical weapons disposal technology. In addition the law required the Army to establish an ongoing program for surveillance and maintenance of the stockpile; (3) *The National Defense Authorization Act for Fiscal Year 1988 and 1989,* (Public Law 100-456) extended the stockpile elimination deadline to April 30, 1997. It also required the Army to complete Operational Verification Testing (OVT) of its test facility at Johnston Atoll, i.e., the Johnston Atoll Chemical Agent Disposal System (JACADS) before full-scale disposal facilities were constructed in the continental United States (CONUS). The *National Defense Authorization Act for Fiscal Year 1991* (Public Law 101-510) also addressed the Chemical Weapons demilitarization program. This law pays particular attention to the safety status and the condition of the stockpile. It

requires the Secretary of Defense to develop a contingency plan which would detail the steps the DOD would follow if the chemical weapons stockpile began an accelerated rate of deterioration or if any other question of its integrity arose. We should also mention the almost-forgotten *Foreign Military Sales Act Amendment* (Public Law 91-672), passed in 1971, which prohibited the transportation of chemical weapons from the Island of Okinawa to the United States. It further directed the DOD to destroy these chemical weapons outside the U.S.[5] (Office of Technology Assessment Report {OTA} 1992) Currently, legislation involving the Chemical Weapons Demilitarization Program addresses the delays in the program and proposed deadlines. Both the House and Senate bills for *National Defense Authorization for Fiscal Year 1992 and 1993* (S. 1507 and H.R. 2100) propose extending the stockpile deadline to July 1999.

The fact that industry is intimately connected to this latest military venture is nothing new in the annals of American political economy. The symbiotic relationship between the military and the economy, better known as "the military-industrial complex," became widely recognized during the Cold War when American corporations reaped huge profits from the production and sale of weapons systems. Sherman (1989) argues that "to measure the full extent of the military impact on the economy, we must recall that the U.S. Department of Defense is the largest 'planned economy' in the world today outside the [former] Soviet Union" (Sherman, 1989, p. 297). Profit rates for corporations involved in the production of military hardware

---

[5] In 1971, the U.S. Army moved chemical weapons from Okinowa to storage facilities at Johnston Island; in March of 1990, the U.S. chemical weapons that had been stored in West Germany (100 tons) were transferred to Johnston Atoll for destruction amid vigorous protest from European Greens.

sometimes reached as high as 56.1 per cent according to a study conducted by the General Accounting Office (GAO) in 1969. Not only were the profit rates on military spending extraordinary, but the profits mostly went to relatively few firms. Sherman (1989) reports that almost all military contracts go to just 205 of the top 500 corporations, and that just 100 of these firms get 85 per cent of all military contracts.

After *perestroika* and the final break up of the Soviet Union, the rationale behind the Cold War rhetoric disappeared and the whole colossus threatened to come to a grinding halt. However, into the breach came some of those same contractors to handle the military's problem of toxic waste disposal. Names like Bechtel National, MITRE Corporation, E.G. & G Instruments, Raytheon---names that we normally associate with the military-industrial complex, are still at it; only the game has changed. Now, these behemoths have shifted into the business of hazardous waste disposal. Van Voorst (1992) reports that at a time of shrinking defense budgets, environmental cleanup is the fastest-growing category of military expenditure --- up 18%, from $2.9 billion last year to $ 3.4 billion in new 1993 funding.

One of the foremost of these contractors is Bechtel National Inc. An article which appeared in the *Richmond Register* on December 1, 1988 discussed the Army's first contract award for the CSDP. The headline read, "BECHTEL TO OVERSEE NERVE GAS DISPOSAL," and the article began, "The U.S. Army has awarded Bechtel National Inc. the first installment of a $284 million, nine-year contract to dispose of chemical weapons stored at the Lexington-Bluegrass Army Depot and seven other sites around the nation" (*Richmond Register*, December 1, 1988, p. 1).

The Chemical Stockpile Disposal Program (CSDP) with its projected life-cycle cost now approaching $9 billion dollars is well-positioned to fill in part of the void left by the reductions in the military budget. To begin with, whatever destruction technology the U.S. develops is destined to have international ramifications. As mentioned earlier, one provision of the bilateral agreement (1990) signed between the former Soviet Union and the United States commits both sides to cooperate on destruction technology. In addition, the Russian stockpile of unitary chemical weapons exceeds that of the U.S. Estimates vary, but Russia is presumed to have around 50,000 tons, although it was once alleged that their stockpile was on the order of 300,000 tons! However, in an article appearing in the French newspaper *Le Monde* (29 December 1987), the Soviet Minister of Foreign Affairs affirmed that the chemical arms reserve of the USSR "does not exceed 50,000 tons of toxic substances'' (Defense Technical Information Center "DTIC'' {database}, 1987, p.10).

The Russians do not as yet have a program to destroy their chemical weapons. They have experimented with neutralization in the past, but abandoned the practice. In 1989 their sole CW destruction facility at Chapayevsk (about 500 miles southeast of Moscow) was shut down by citizen protests. Mikita P. Smidovich, the deputy head of the Soviet delegation to the Geneva Conference on Disarmament explained what happened. In what amounts to a masterful understatement, he said: "The Chapayevsk facility was completed last year but the public objected to it, citing environmental concerns, so the government decided to close it'' (Ember, 1990, p.18). The closing of Chapayevsk leaves the Soviets without a chemical weapons destruction facility. Rep. Larry J. Hopkins (R.-Ky) estimates it will take them

another three to five years to develop an operational chemical weapons disposal facility.

The Russians are looking to the United States to provide the necessary technology and expertise for destroying chemical weapons. The impoverished state of the Russian economy makes it necessary for them to look around for assistance with this enterprise. The U.S. Congress has already allocated $800 million to help Russia destroy chemical weapons. But whoever pays, the destruction is likely to involve lucrative contracts. Already the German company Metallgesellschaft AG is angling to destroy the chemicals stored in Kambrak. According to *The Wall Street Journal*, "So fierce is competition among U.S. engineering firms eager to help the Russians---with U.S. tax dollars---that the Pentagon still hasn't chosen from among the 32 concerns that expressed interest last year" (*Wall Street Journal*, February 25, 1993).

It is well known that Russian CW experts have already been given guided tours of the U.S. chemical weapons destruction facility at Tooele, Utah In fact, in the fall of 1993, six Russians were invited to participate in a Russian Intern Program sponsored by the Army for the purpose of training Russian specialists in our chemical demilitarization technology. According to a report published by the Army, those participating in the program are made up of both chemical disposal managers and plant operators and will be the first participants in the 'Russian Familiarization Program,' one of several provisions contained in a 1992 Memorandum of Agreement between the Department of Defense (DOD) and President Boris Yeltzin's Committee on Conventional Problems of Chemical and Biological Weapons. The article states that "the U.S. Army Chemical Materials Destruction Agency's

(USACMDA's) philosophy is to provide the maximum opportunity for information exchange as the Russians formulate their disposal plans'' (*Chemical Demilitarization Update*, July 1993, Vol.2, Issue no. 3, p. 4). A knowledgeable U.S. source argues that the Soviets are not primarily interested in our destruction technology (i.e., incineration), but in our safety and pollution-control technology. Still, that hasn't prevented western engineering firms from trying to interest the Soviets in incineration technology. Among U. S. firms making such pitches are Combustion Engineering, General Atomics, and Stearns and Rogers, a subsidiary of Raytheon (Ember 1990).

However, the U.S. military's toxic waste problem extends far beyond the weapons that make up the unitary stockpile. Indeed, according to numerous reports, the Department of Defense (DOD), is the United States number one polluter. The military's toxic legacy is described most aptly by Lenny Seigel (1991) of the National Toxics Campaign. He observes that "the military-industrial establishment, i.e., the facilities of the DOD, military contractors, and the Energy Department's nuclear weapons production complex have accumulated a monstrous collection of toxic waste sites'' (Seigel et al, 1991, p. ii) and that "in 1989, DOD estimated that it generated about 900 million pounds of hazardous wastes, as well as 17 billion pounds of wastewater, much of it contaminated with toxic chemicals'' (Seigel et al, 1991, p. ii). To make matters worse, until very recently, federal facilities were exempt from the enforcement powers of environmental regulators. Seigel (1991) and his colleagues argue argue that the Pentagon's environmental record has been abysmal. "At facility after facility,'' they write, "DOD has concealed or denied the impact, extent, and even the existence of toxic

contamination. Moreover, DOD's growing military cleanup program is dwarfed by the enormity of its other missions'' (Seigel et al, 1991, p. iii). One could make a case that the security of having destruction facilities located on *federal* property rather than on private property, gives the military a better chance of dealing with its enormous hazardous waste problem because federal facilities are often exempt from the rigors of certain environmental laws.

1.15 The Political Economy of Incineration: Recent Trends

The Army's decision to use high-temperature incineration as the baseline technology is in line with recent trends in the hazardous waste industry. This is spurred on, no doubt, by the Environmental Protection Agency which virtually mandated incineration for certain kinds of hazardous waste. In 1988, revenues from the manufacture and sale of incineration equipment were estimated at $1.6 billion, while income from "incineration services'' was estimated at $370 million (Fredonia Group 1990). Growth in each sector's revenue has averaged more than 30 percent each year, while projected growth through 1993 is 20 percent for both sectors (Fredonia Group 1990). Costner and Thornton (1990) argue that the EPA has been the driving force behind the incineration industry's rapid expansion. The United States Environmental Protection Agency (EPA) encourages incineration as the best available "permanent'' cleanup method for many types of contaminated soils and other materials (Costner, 1990).

Greenpeace points out that much of the incineration industry's future and profits are going to come from taxpayer's money since a large share of expenditures will be necessary to clean up contaminated industrial sites on

the Superfund list (see Appendix D) and at government sites owned by the Department of Defense and the Department of Energy. The total cost of Superfund cleanup has been estimated at $500 billion dollars over fifty years (Office of Technology Assessment 1989). Cleanup costs for inactive DOE sites alone have been estimated at $35 billion to $65 billion (Gruber 1990). EPA administrators and industry executives have maintained close ties not unlike those traditionally found between the Pentagon and other industry moguls. The close relationship between the hazardous waste disposal industry and EPA has been alluded to by Costner and Thorton (1990) in what they call the "revolving door" phenomenon by which former EPA officials take lucrative jobs in the incinerator industry and the Department of Defense and the Department of Energy. "Neither department," they point out, "has had an encouraging record of public disclosure, compliance with environmental laws, or efficient spending in its contract decisions" (Costner, 1990, p. 48). They are also quick to point out that despite rhetoric about the importance of "recycling" and of reducing waste, this *rush to burn* only exacerbates the problem by providing lucrative incentives to continue producing more waste. The rate of hazardous waste generation in the U.S. is rising by at least 5.5 percent per year (Costner 1991) and an ever-increasing share of this growing quantity of waste is now being directed to incinerators as opposed to land burial.

1.16 Summary

The Army's current plan for the disposal of the lethal unitary stockpile has drawn fire from many quarters. On one hand, the Army is defending incineration, with the full weight of the regulatory machinery tending to

support the status quo decision; on the other hand, we have citizen activists in the host communities who oppose incineration and insist that alternatives be explored. Not surprisingly, the Army holds that their incineration plan is "safe" and they have financed an elaborate protective action program, the Chemical Stockpile Emergency Preparedness Program (CSEPP) to handle any chance chemical accidents (in the unlikely event of an "unplanned release" of chemical agent) related to the incineration program. However, they have never addressed the issue of the hazards of incineration *per se* in any of the documents relating to this program other than to assert that the incinerators will comply with a certain stringent clean air requirement as determined from trial burns.

Congresswoman Pat Schroeder eloquently foreshadowed the dilemma presented by the Army's present plan to destroy the United States' arsenal of chemical weapons. In speaking to radiation burn victims, she once observed that "Our nuclear weapons program was built in the name of national security---protecting the lives of Americans. Now these very weapons, which were designed to protect citizens from some unnamed enemy, pose dangers to the very citizens they were designed to protect. One can't help but wonder, who was protected and at whose expense" (Schroeder, et al. 1987). Like our nuclear program, our chemical weapons (CW) program was created to protect Americans from some unnamed enemy and today we wonder, at whose expense will they be destroyed.

Chapter 2

The Nature of Power: Machiavelli to Lukes

2.1 The Nature of Power

This is a study of power; more specifically, it is a study of state power and the uses to which it is put in the context of contemporary American society. Studies of power and the state have been the mainstay of thoughtful philosophers and social scientists throughout the ages. The concept of power is perhaps the most fundamental in the whole of political science --- and perhaps the most contentious. The political process *is* the shaping, distribution, and exercise of power. Debates about power date back to Machiavelli (1532) and probably to Socrates' dialogue with Thrasymachus in the fifth century B.C.E. This study of power is not intended to be exhaustive and we will not be launching into a full exposition on the concept; rather, we will limit our attention to the extended debate on the subject that has been waged in the literature of American social science with emphasis on the ways in which Machiavelli's unique perspective can shed light on the present study.

Power, like "democracy" is what W. B. Gallie once referred to as an "essentially contestable" concept (Emerson 1983, p.58). It is an inherently debatable and changeable idea like "freedom," "equality," "justice," or "human rights," and, as such, is subject to numerous interpretations and definitions (Arblaster 1987). The most widely used definition of power in the social sciences is that of Max Weber. Weber wrote that, "We understand by 'power' the chance of a man or a number of men to realize their own will in

a social action even against the resistance if others who are participating in the action'' (Wrong 1979, p. 21). Or to paraphrase Weber, you have power if you get what you want.

Domhoff (1983) argues that the partiality shown to Weber's definition, has the disadvantage of harboring within it the implicit theory that at bottom the basis of power is the ability to use force or coercion on the other person or group. It, therefore, prejudices what should be a question open to empirical study. The point is made pithily in Allen Drury's novel, *A Shade of Difference* , "The more real power you have, the less you can afford to exercise it, and the less real power you have, the more you can throw it around''(Drury 1962, p.82).

In order to avoid the problem inherent in Weber's definition, we prefer the definition put forth by Bertrand Russell: "Power is the capacity of some persons to produce intended and foreseen effects on others'' (Russell, 1938, pp. 10-11). This definition avoids the temptation to view power as one-dimensional and allows for a broader structural analysis of power processes. Marx saw economic power as the source of all power; however, Bertrand Russell disagreed with this notion. He argued, "It has been customary to accept economic power without analysis, and this has led in modern times, to an undue emphasis on economic as opposed to war and propaganda quite as much as upon the factors usually considered in economics'' (Russell, 1938 pp. 120,135). He further argues that, "Power has many forms such as wealth, armaments, civil authority, influence on opinion. No one of these can be regarded as subordinate to any other, and there is no one from which the others are derivative'' (Russell 1938, pp. 13-14). Lasswell (1950) reiterates this sentiment in the first of his 'propositions' on power. "The forms of power,''

he says, "are interdependent: a certain amount of several forms of power is a necessary condition for a great amount in any form. and none of the forms of power is basic to all others'' (Lasswell and Kaplan 1950, p. 92,94). Paulo Friere (1972) also supports this view, he argues that power is accumulative in nature, each dimension serving to reinforce the other (Friere, 1972). However, Parenti challenges these arguments. He writes, "Far from the fluid interplay envisioned by the pluralists, the political efficacy of groups and individuals is largely determined by the resources of power available to them, of which wealth is the most crucial,'' and he continues, "those who control the wealth of society enjoy a persistent and pervasive political advantage'' (Parenti 1980,p. 304).. This point was made eminently clear by an activist who commented, "The Army has nine billion dollars; we have bake sales!''

A number of scholars (Frederick 1937; Lasswell and Kaplan, 1950; Tawney 1931; Dalh 1957) argue that power should be defined relationally, not as a simple property. Hence, 'political power' is distinguished from power over nature as power over other men. Frederick (1937) emphasizes this point by devising an "axiom'' regarding power stating that, "It is a certain kind of human relationship'' (Frederick 1937,p. 12-14). Tawney's definition similarly reflects this emphasis regarding the relational quality of power. He says, "Power may be defined as the capacity of an individual, or group of individuals, to modify the conduct of other individuals or groups in the manner which he desires. . .'' (Tawney 1931, p. 230). Lasswell agrees that power should be defined *relationally*, not as a single property (1950). He argues that unless some connection exists between A and B, then no power relation can be said to exist. Dahl also agrees with this formulation, "First let us agree, he says, "that power is a relation, and it is a relation among people''

(Dahl, 1957,p. 80). In elaborating on what he calls his 'intuitive view of power', Dahl writes that power "seemed to involve a successful attempt by A to get á to do something he would not otherwise do'' (Bell et al. 1969, p.82). Lasswell and Kaplan extend their concept to include participation in the making of decisions and they also note that, "the amount of power tends to increase 'til limited by other power holders'' (Lasswell and Kaplan l950,p. 94). We will return to this notion later on in this analysis. Further, they point out that a power relation can exist only if one of the parties can threaten to invoke sanctions: power is "the process of affecting policies of others with the help of (threatened) severe deprivations for nonconformity with the policies intended'' (Lasswell, 1950, p.76).

Power is often confused with "force,'' "coercion,'' "authority,'' and "influence.'' While force is sometimes used by the powerful to obtain compliance, Parsons argues that, "securing compliance with a wish, whether it be defined as an obligation of the object or not, simply by threat of superior force, is not an exercise of power'' (Bell, et al. 1969, p. 251). Bachrach and Baratz (1962) use "power'' in two distinct senses. On the one hand, they use it in a general way to refer to all forms of successful control of A over B ---that is, of A's securing B's *compliance.* Lasswell (1950) argues that it is the *threat* of sanctions which differentiates power from influence in general. He points out that, "Power is a special case of the exercise of influence; it is the process of affecting policies of others with the help of (actual or threatened) severe deprivations for nonconformity with the policies intended.'' Lukes (1974) notes that among pluralists, "power'' and "influence'' tend to be used interchangeably, on the assumption that there is 'a primitive notion that seems to lie behind *all* of these concepts' (Dahl 1957 in Bell, 1969 p. 80).

According to Lukes,"*Who Governs?* "speaks mainly of 'influence', while Polsby speaks mainly of 'power'" (Lukes 1974, p. 12).

The foregoing discussion can easily lead one to conclude that the concept of power is really of little theoretical utility, however, we feel that this is not the case. We must be clear, however, that we are concerned with state power, which is a collective phenomenon, not the individual exercise of power. The state has enormous resources at its disposal (both overt and subtle) to see that its prerogatives are fulfilled, and unless checked by a formidable counter force, will pursue its own agenda. In the modern state, part of the process of retaining power is to cloak its decisions in the mantle of concensus. This brings us full circle to a discussion of the insights of Machiavelli.

2.2 Machiavelli: Prophet for a Modern Age

We begin with Machiavelli, and properly so, for he was the first modern analyst of state power. In his eloquent Introduction to *The Prince and the Discourses* (1940) Max Lerner writes, "We live today in the shadow of a Florentine, the man who above all others taught the world to think in terms of cold political power" (Lerner 1940, p. xxv). Machiavelli's interest was not so much in *defining* power as in describing how to *use* power---particularly, state power. His whole life was bound up with a passionate fascination with the idea of state power. Gauss (1952) argues that *The Prince* should now become required reading for all who wish to understand some of the central problems of our day, e. g., what is, or should be, the relation of the citizen to the state, and what is, or what ought to be, the relations of the states to each other, and finally, and most importantly, what are the sources of, and

the limits, if any, to the power of the state. According to Gauss (1952) nowhere in *The Prince* do we find any limit placed upon the power of the state; yet it was this problem of limiting state power that was the primary concern of Thomas Jefferson.

Now, one may ask what a person who lived four centuries ago can contribute to our understanding of technological society in the 20th century. First, Machiavelli lived during the dawning of what we now refer to as the "nation-state'' system. He lived in a period when economic growth had gone so far as to burst the bounds of existing political forms. Nineteenth century man expressed ultimate faith in progress and the nation and was inclined to regard the world of the nation states as a kind of utopia. If there was no other law over the sovereign, there did remain what has sometimes been called the first law of nature---that of self-preservation. Many crimes were committed in its name. No state could afford to see its neighbors become too strong; therefore, various forms of imperialism, colonialism and even "preventive wars'' were undertaken in the name of the national interest or "for reasons of state.'' This became, in fact, the *only* law (Gauss 1952). Christian Gauss (l952) argues that in regarding the state as a dynamic expansive force, Machiavelli was closer to reality and '*Realpolitik* ' than much nineteenth and early twentieth-century thinking and in this respect must be considered a distinctly modern thinker. In fact, Gramsci's concept of *hegemony* embodied concepts strikingly similar to Machiavelli. According to David Forgacs (1988) who edited a collection of Gramsci's writings, the concept of *hegemony* is linked by Gramsci in a chain of associations and oppositions to 'civil society' as against 'political society', to consent as against coercion, to 'direction as against 'domination' "These binaries,'' he writes, "draw on the coercion-

consent opposition in Machiavelli and some other political thinkers'' (Forgacs 1988, p. 423).

In Max Lerner's Introduction to *The Prince and the Discourses,* he argues that, "Machiavelli wrote a grammar of power, not only for the sixteenth century but for the ages that followed'' (Lerner, 1950, p. xxxiv). Lerner observes that when Machiavelli wrote his grammar of power, he came close to setting down the imperatives by which men govern and are governed in political communities whatever the epoch and whatever the governmental structure. Lerner (l950) argues that Machiavelli's thinking amounted to something akin to a revolution in political thinking. He eschewed the humanists' writings about princes because these writings were ridden with theology and metaphysics, and instead he concentrated on writing about the *actual* politics of his time. Machiavelli concluded that the core of the state was *power*, and he conceived of the state as something not outside of our human world. "The particular form of the state under which men live is not imposed by either God or the devil,'' as Christian Gauss observed in his Introduction to Machiavelli's , *The Prince.* (Gaus 1940, p. xi). Machiavelli argued that to some degree, at least, the state is man's creation, and like other human creations, subject to his revision, i.e., the particular formation of the state was not inevitable nor accidental. In this he forshadowed Marx.

Machiavelli's true legacy is his lack of illusions about the state. As the author of the concept of "for reasons of state'' (*raison d' etat*), he viewed the state as a necessary evil rather than as a benign entity, and in this, he opened up a window on how later analysts of state power might approach the subject. In speaking about Machiavelli's unique perspective, Lerner (1950) writes, "He

had the clear-eyed capacity to distinguish between man as he *ought* to be and man as he actually is --- between the ideal form of institutions and the pragmatic conditions under which they operate'' (Lerner, 1950, p. xxxii). "Where others looked at figureheads,'' Lerner maintains, "he kept his eyes glued behind the scenes. He sought the ultimate propulsion of events. He wanted to know what made things tick; he wanted to take the clock of the world to pieces and find out how it worked'' (Lerner, 1950, p. xxvi). Thus, he forshadowed later theorists who refused to accept the conventional wisdoms (i.e., that of the pluralists) regarding the operation of power in contemporary society. In particular his emphasis on "structure'' as opposed to "personality'' has become an important feature of later developments in conflict theory. In employing the metaphor of the stage, Michael Albert (1992) described Machiavelli's perspective perfectly: "What we have to understand,'' he said, "is the script that lies behind the actors, and the script in this case flows from the interstices of institutional power, not from the will of some malevolent conspirators operating outside the bounds of the system or even against it'' (Albert, 1992).

Machiavelli recognized four things as essential components of state power which are germane to our analysis: (1) the centralization of power; (2) the importance of appearances ["It is not, therefore, necessary for a prince to have all the above-named qualities, but it is very necessary to *seem* to have them'' (Machiavelli {1532} 1940, p. xxxii)]; (3) the need for allowing citizens a mechanism for venting grievances "without having recourse to extraordinary measures'' (Machiavelli {1532} 1940, p. 133); and (4) the need to build consensus---hence, the modern state's need for propaganda and other institutional methods for what has euphemistically been referred to as

"maintaining citizen concurrence." With regard to the importance of consensus building he said, "Well ordered states and wise princes have studied diligently not to drive the nobles to desperation, and to satisfy the populace and keep it contented, for this is one of the most important matters that a prince has to deal with'' (Machiavelli {1532 }1940, p. 59).

Machiavelli lived at the dawning of what we have come to refer to as the nation-state system. Lerner (1940) writes that two elements were historically to enter into the composition of the nation-state system: one was national unity and the idea of a common culture and common economic limits; the second was a concentration of power at the center. According to Lerner, "Machiavelli only dimly foresaw nationalism, but he was keenly aware of the necessity for the concentration of power from the center in order to maintain unity and he wrote about the methods by which this could be achieved'' (Lerner 1940, p.34). Although history has not been kind to the memory of Machiavelli, his contribution to the understanding of the dynamics of the modern state and our understanding of political power, *as it is actually exercised*, cannot be underestimated. Unfortunately, the common sense view of Machiavelli, i.e, the notion of "Machiavellian'' tactics or a Machiavellian "personality'' does not do justice to his truly structural perspective --- this above all is his legacy. We see in his "Prince'' a metaphor for state power.

Lerner (1940) observes that power politics existed before Machiavelli was ever heard of and will exist long after his memory. What he did was recognize its existence and subject it to scientific study. And so his name has been associated with it. As we progress through the analysis of the empirical data, Machiavelli's contribution will become clearer.

2.3 The Three Faces of Power

The analytic framework for this research is that of Steven Lukes (1974), a British sociologist, and his formulation of what he termed, The "Three Faces of Power". According to Lukes (1974), there are three ways of analyzing power in capitalist societies. Using what he terms a "three dimensional view," his schema provides a useful framework for understanding the dialectics of power and dissent, particularly because his approach emphasizes structural constraints rather than individual action. It should be emphasized, however, that the dimensions of power should not be construed as operating separately. Instead, it should be understood that the separation of power into three faces or *dimensions* is purely for heuristic purposes. The three dimensions, although discussed separately, are to be thought of as occurring simultaneously. A useful metaphor for understanding the operation of power as described by Lukes would be peeling away the layers of an onion.

The first dimension according to Lukes' (1974) formulation defines power (known as the *pluralist* view) as the ability of A to prevail over B in formal political decision-making on one or more key issues over which there is observable conflict (Lukes 1974). The second dimension includes the first, but expands to include the ability to determine *what is to count* as an issue where there is observable conflict and the third dimension involves the ability of A to shape the conceptions of the situation of the powerless and "this may happen in the absence of observable conflict, which may have been successfully averted" (Lukes 1974, pp. 24-25). According to Gaventa, the third dimension is "by far the least developed and least understood mechanism of power--at least within the field of political science" (1980, p. 15). The present

study falls somewhere between the second and third dimensions of power according to Lukes' (1974) paradigm.

2.4 The First Dimension of Power: The Pluralists

The study of power in the United States has focused on community studies and has been dominated largely --- at least in political science---by the pluralists' school of thought, as exemplified in the works of Robert Dahl, Wolfinger and Polsby (Dahl 1961; Wolfinger 1971; Polsby 1963). The community power literature is not particularly helpful in understanding the operation of power at the national level in the modern state. Power in local communities is said to be fractionated and diffuse, by all accounts of the pluralists. However, pluralists do not confine their analysis of the nature of power to local community structures, but use this paradigm to explain the operation of state power as well. Pluralists argue that power is not held by one group, but plurally by many groups. They affirm that:

> The power structure of the United States is highly complex and diversified (rather than unitary and monolithic), that the political system is more or less democratic, that in political processes the political elite is ascendent over and not subordinate to the economic elite (Rose 1967, p. 492).

Dahl's study of New Haven is the exemplar of pluralist philosophy and methodology. He studied three "issue areas" in New Haven politics to see who prevailed in the decision-making process: party nominations, urban redevelopment and public education (Dahl 1961). He concluded that no one elite controlled the politics of New Haven. On the contrary, he argued that different groups exercise influence over issues of specific concern to them. Thus, business leaders in New Haven were influential in urban

redevelopment of the downtown business area, since this was of clear concern to them. However, business leaders "did not control education, hold a large number of political offices, or greatly influence political nominations in New Haven" (Sherman and Wood 1989, p. 273). Hence, he concluded that democracy thrived in New Haven and he argued that no "ruling class" can be seen to dominate.

Dahl's central method in *Who Governs?* was to 'determine for each decision which participants had initiated alternatives that were finally adopted, had vetoed alternatives initiated by others, or had proposed alternatives that were turned down. In Merleman's words, the pluralists "studied actual behavior, stressed operational definitions, and turned up evidence. Most important, it seemed to produce reliable conclusions which met the canons of science" (Merelman 1968,p. 451). The focus on observable behavior in identifying power involves the pluralists in studying decision-making as their central concept. Polsby writes that, "Power may be studied by examining 'who participates, who gains and loses, and who prevails in decision-making" (Polsby 1963, p. 55). "The key to the definition is a focus on behavior --- doing, participating --- about which several assumptions are made. . .First, grievances are assumed to be recognized and acted upon. . Secondly, participation is assumed to occur within decision-making arenas, which are in turn assumed to be open to virtually any organized group" (Gaventa 1980,p. 5). It is further assumed that the decisions involve *direct*, i.e., actual and observable conflict. Thus, for Dahl, power can be analyzed only after "careful examination of a series of concrete decisions" (Dahl 1958). The pluralist focus on "observable behavior," i.e., decisions reached over specific issue areas, has its basis in the theory of logical positivism prevalent

at the beginning of the twentieth century and venerated by pluralist thinkers and many social scientists alike. Positivists argued that only observable behavior i.e., behavior that is measurable (like voting) constituted valid knowledge. Following behaviorist principles, pluralists believe that individuals' interests can be discovered by seeing which policy options they choose; hence, pluralists tend to ignore many features of the operation of power that lay hidden beneath the surface, arguing that you can't study what you can't measure. Dahl's findings have not gone unchallenged, however. Domhoff (1978) has challenged Dahl on behaviorist grounds and other studies (Lyon, et al. 1981; Tabb and Sawers 1978) support this critique. In an interesting rejoinder to the pluralists' insistence on studying only "observable phenomena," Michael Parenti writes, "Now I, for one, have no quarrel with the dictum that we observe only the observable, but it may be suggested that what the pluralists have defined as "observable" is not all that meets the eyes of other researchers" (Parenti 1970, p. 504).

In his critique of pluralist methodology, Floyd Hunter said, "They {the pluralists} have begun their structure at the mezzanine without showing us a lobby or foundation, i.e., they have begun by studying the issues rather than the values and biases that are built into the political system, and that, for the student of power, give real meaning to those issues which do enter the public arena"(Hunter 1953)

As the foregoing discussion makes clear, the pluralists concentrate their attention, not upon the sources of power, but upon its *exercise.* Power to them means "participation in decision-making," and can be analyzed only after a careful examination of a series of concrete decisions. (It has been pointed out, however, that using pluralist methodology, it is possible to come

to some very non-pluralist conclusions). The model takes no account of the fact that power can be and often is exercised by confining the scope of the decision making to relatively "safe" issues. In brief, the one dimensional view of power cannot reveal the less visible ways in which a pluralist system may be biased in favor of certain groups and against others. "A deeper analysis," Lukes suggests, "would concern itself with all the complex and subtle ways in which the inactivity of leaders and the sheer weight of institutions--political, industrial, military, educational, keep people from even trying to get into the political arena" (Lukes, 1974, p. 1). And I would add, once there, keep them from participating in substantive ways in the decisions that affect their lives.

Dahl did not limit his conclusions to the municipal government of New Haven, but extended his findings as evidence that the entire American political system was similarly open based on the fact that groups compete for power. He wrote: "The independence, penetrability, and heterogeneity of the various segments of the political stratum all but guarantee that any dissatisfied group will find spokesmen in the political arena" (Dahl 1961, p. 93). Similarly, Polsby writes, "in the decision-making of fragmented government--and American national, state, and local government are nothing if not fragmented--the claims of small intense minorities are usually attended to" (Polsby 1963, p. 118).

The notion that competing groups in society can and do act as a restraint on tyranny has wide acceptance. Indeed, even Machiavelli spoke about the equalizing effect of various competing groups within society. He wrote, "In fact, when there is combined under the same constitution a prince, a nobility, and the power of the people, then these three powers will watch

and keep each other reciprocally in check'' (Machiavelli 1940,p. 115). Similarly, the English pluralist, David Nichols, argued that the existence of diverse groups in society, e.g., "cultural, religious, economic, civic and others, constitute. . .the principal bulwark against state absolutism'' (Nichols 1974, p. 2). C.W. Mills referred to this as the idea of "the great balance.'' He wrote: "The idea of the great balance, {italics mine} in all its various forms, is now the prevailing common-sense view of public affairs'' (Mills 1956, p. 336).

Sherman and Wood (1989) point out that a newer and more qualified version of the pluralist conception has emerged in the work of Dye (1983), as well as Orum(1967) and Knoke (1982). Pluralists now make the argument that "America is ruled by various competing elites'' (Kourvetaris and Dobratz 1982). The new pluralists vision admits some inequality, but still sees a resulting political democracy that roughly reflects and arbitrates the desires of many conflicting groups. However, Sherman and Wood write:

> They {pluralists} find it necessary to emphasize,that political power is to a large degree independent of and superior to economic power. The reason, of course, is that economic power is so unequally distributed. If the distribution of political power exactly followed that of economic power, the degree of inequality would leave little to call democracy (Sherman and Wood 1989, p. 268).

2.5 Elite Theory

Counterpoised to pluralist theory is another view of power, known as elite theory which postulates a ruling class model of power. Elite theorists (Domhoff 1983; Hunter 1953; Mills 1956) argue that there is a social upper class in the United States that is a ruling class by virtue of its dominant role in the economy and government. Further, Domhoff (1978) argued that this ruling class is socially cohesive, has, its basis in the large corporations and banks (and

the military), plays a major role in shaping the social and political climate, and dominates the federal government through a variety of organizations and methods. Leaders within the upper class join with high-level employees in the organizations they control to make up what will be called the *power elite*. Domhoff writes:

> This power elite is the leadership group of the upper class as a whole, but it is not the same thing as the upper class, for not all members of the upper class are members of the power elite and not all members of the power elite are part of the upper class. It is members of the power elite who take part in the processes that maintain the class structure. Domination does not mean total control, but the ability to set the terms under which other groups and other classes must operate. (Domhoff 1978, p. 2)

Against the elitist approach to analyzing power several criticisms have been levelled. For example, Dahl and others, while not denying the existence of elites, maintain that their power is checked by other elites. Dahrendorf (1959) writes, "If there are elites in our society, the pluralists say, they are numerous and specialized, and they are checked in their demands by other elites'' (Dahrendorf 1959, p. 67). According to Dahrendorf, pluralists argue that no one group can press its advantage "too far'' and any group that is interested in an issue can find a way'' (Dahrendorf 1959, p. 67). To this assertion Parenti replies, "Not only are elites often unchecked by public authority on the most important issues affecting them, but in many instances *public* decision making authority has been parcelled out to *private* interests on a highly inegalitarian basis'' (Parenti 1970, p. 503). Dahl has criticized the power elite thesis on other grounds as well. He erroneously conceives of elite domination exclusively in the form of a 'conscious cabal' exercising the power of decision-making and vetoing. "In doing so," argue Bachrach and

Baratz, "he overlooks a more subtle form of domination, one in which those who actually dominate are not conscious of it themselves, simply because their position of dominance has never seriously been challenged'' (Bachrach and Baratz 1962, p. 952).

Elite theorists claim that in every institution there is an ordered system of power, a "power structure'' which is an integral part and mirror image of the organization's stratification, and they imply that this power structure tends to be stable over time. Polsby disagrees with this formulation and he writes, "It has been assumed (by elite theorists) that power is as predictably distributed in the population as the other stand-bys of stratification analysis, class and status seem to be'' (Polsby 1963 p.232). It is also argued that elite theorists wrongly equate *reputed* power with actual power (Bachrach, 1962). Dahl (1958) maintains that one can only strictly test the hypothesis of a ruling class if there are, "...cases involving key political decisions in which the preferences of the hypothetical ruling elite run counter to those of any other likely group that might be suggested, and. . .in such cases, the preference of the elite regularly prevail'' (Dahl 1958, p. 466). Finally, Frey (1971) makes "a plea for a decent burial'' of the elitist/pluralist controversy, in order to launch a joint assault on the important, yet outstanding problems of community power analysis (Frey, 1971). Eventually, the controvrsey was put to rest, but its spirit escaped the grave and remains alive, embodied in new terminology.

2.6 The Second Dimension of Power

One of the most important aspects of power, Parenti suggests, is not to prevail in a struggle but to predetermine the agenda of struggle--to determine whether certain issues ever reach the competition stage (Parenti 1970). This

point of view was elaborated first by Schattschneider (1960) and then later by Bachrach and Baratz (1970).

According to pluralists, power is exercised when "A" gets "B" to do something that "B" would not otherwise do. However, power is also exercised when "A" devotes his energies to creating or reinforcing social and political values and institutional practices that limit the scope of the political process to public consideration of only those issues which are comparatively innocuous (i.e., "safe" issues). Lasswell (1930) first commented about the importance of limiting the scope of conflict. "The problem of politics," he said, "is less to solve conflicts than to prevent them" (Lasswell 1930, p.196,197). Following Lasswell, Schattschneider (1960) wrote about the importance of containing or limiting the scope of a conflict. He said: "The scope factor overthrows the familiar simplistic calculus based on the moral tug of war of measurable forces" (Schattschneider 1960, p.5).

Power holders manage this in a variety of ways. One of the ways Schattschneider describes is through, what he termed, the "mobilization of bias." He wrote:

> All forms of political organization have a bias in favor of exploiting some kinds of conflict and the suppression of others because *organization is the mobilization of bias*. Some issues are organized into politics while others are organized out" (Schattschneider 1960, p. 71).

The term 'mobilization of bias' as described by Bachrach and Baratz refers to, "a set of predominant values, beliefs, rituals, institutional procedures (i.e., "rules of the game") that operate systematically and consistently to the benefit of certain persons and groups at the expense of others. Those who benefit are placed in a position to defend and promote their vested interests" (Bachrach and Baratz 1970, p. 43). More often than not,

the status quo defenders are a minority or elite group within the population in question.

Pluralists assert that power is reflected only in concrete decisions, however, Professor Schattschneider reminds us that, "to the extent that a person or group consciously or unconsciously creates or reinforces barriers to the public airing of policy conflicts, that person or group has power'' (Schattschneider 1960, p. 96). He argued that the crucial problem in politics is the management of conflict. He wrote:

> All politics, all leadership, all organization involves the management of conflict. . . the consequences of conflict are so important that it is inconceivable that any regime could survive without making an attempt to shape the system. In the interest of their own political survival, therefore, leaders and organizations must make sure that issues which threaten their existence, their own allocations of political space, are not admitted to the political arena (Schattschneider 1960, p. 71).

Following Schattschneider, Bachrach and Baratz (1962) developed the concept of "power's second face'' by which power is exercised not just upon participants within the decision-making process but also towards the exclusion of certain participants and issues altogether. In effect, they argue that the pluralists: (1) focus upon "issues''; (2) provide no way of distinguishing "important'' from "unimportant'' issues; and (3) are blind to the values and biases built into the political system that give real meaning to those issues which do not enter the political arena.

The second dimensional approach looks at blockages that prevent grievances from emerging into conflict within the organization. For Bachrach and Baratz (1962) it is crucially important to identify potential issues

which nondecision-making prevents from becoming actual. They argue that "the distinction between important and unimportant issues cannot be made . . . intelligently in the absence of an analysis of the 'mobilization of bias' in the community which consists of an analysis of the dominant values and the political myths, rituals and institutions which tend to favor the vested interests of one or more groups relative to others'' (Bachrach and Baratz 1962, p. 950). They argue that in the interest of their own political survival, leaders and organizations must make sure that issues which threaten their existence, their own allocations of political space, are not admitted to the political arena. This is done in a variety of ways: (1) through invoking the 'mobilization of bias'; (2) through creating barriers to participation, e.g., agenda setting ; and (3) through decisions and 'nondecisions.' *Nondecision-making* is a term used to refer to the practice of limiting the scope of actual decision-making to "safe'' issues by manipulating the dominant community values, myths, and political institutions and procedures. A a *non-decision* is defined as:

> A decision that results in suppression or thwarting of a latent or manifest challenge to the values or interests of the decision maker. To be more nearly explicit, nondecision-making is a means by which demands for change in the existing allocation of benefits and privileges in the community can be suffocated before they are voiced, or kept covert; or killed before they gain access to the relevant decision-making arena; or, failing all of these things, maimed or destroyed in the decision-implementing stage of the policy process (Bachrach and Baratz 1970,p. 44).

They suggest several ways in which this may be accomplished: (1) by force; (2) threat of sanctions ('negative or positive') 'ranging from intimidation. . . to co-optation'; (3) the invocation of an existing bias of the

political system, e.g., a norm, a precedent, a rule or procedure; (4) reshaping or strengthening the mobilization of bias through the establishment of *new* barriers or new symbols against the challengers efforts to widen the scope of the conflict (Gaventa 1980). Such processes may take direct observable forms; however, Gaventa suggests that, "there may be other processes of non-decision-making power which are not so explicitly observable'' (Gaventa 1980, p. 15). He refers to two processes, one which he terms '*decisionless decisions*' and the other which he terms, '*the rule of anticipated reactions.* "The first of these,'decisionless decisions', he says, "grows from institutional inaction, or the unforeseen sum effect of incremental decisions'' (Gaventa 1980, p.15). A second process has to do with the 'rule of anticipated reactions,' "situations where B, confronted by A who has greater power resources decides not to make a demand upon A, for fear that the latter will invoke sanctions against him'' (Bachrach and Baratz 1970, pp. 42-46).

An example of an empirical work which makes use of the concepts of "nondecision-making'' is Matthew Crenson's book, *The Unpolitics of Air Pollution: A Study of NonDecision-making in the Cities* (Crenson 1971). He concludes that the air pollution issue tends not to flourish in cities where industry enjoys a reputation for power.

Lukes has criticized Bachrach and Baratz' view of power on the grounds that they follow the pluralists in adopting a too methodologically individualistic view of power. "As students of power and its consequences,'' they write, "our main concern is not whether the defenders of the status quo use their power consciously, but rather, if and how they exercise it and what effects it has on the political process and other actors within the system'' (Lukes 1974, p. 21). Lukes argues that the bias of the system is not sustained

simply by a series of individually chosen acts, but also by the *socially structured* and *culturally patterned behavior of groups*, and the practices of *institutions* which may be manifested by individual actors (Lukes 1974). In his classic work *1984*, Orwell expressed it similarly when he said:

> The essence of oligarchical rule is not father-to-son inheritance, but the persistence of a certain world-view and a certain way of life, imposed by the dead upon the living. A ruling group is a ruling group so long as it can nominate its successors. The Party is not concerned with perpetuating its blood, but with perpetuating itself. *Who* wields power is not important, provided that the hierarchical structure remains always the same. (emphasis in original) (Orwell 1992, p. 153).

To sum up, Bachrach and Baratz resolutely reject the idea that a sound concept of power can be predicated on the assumption that power is totally embodied and fully reflected in "concrete decisions" or in activity bearing directly upon their making. The second dimensional view of power asserts that A constructs barriers to the participation of B through non-decision making and the mobilization of bias.

2.7 The Third Dimension of Power

The second view has been extended by a third view (Lukes 1974), which suggests that power not only may limit action upon inequalities, it may also serve to shape people's minds so that they do not see certain problems. Lukes reminds us that daily life work involves the incorporation of a basic world view and this view is determined largely by members of a ruling class. Lukes' definition of power differs from that of the pluralists. Whereas the pluralists define power as the ability of A to get B to do something he would not otherwise do, Lukes (1974) writes: "I have defined

the concept of power by saying that A exercises power over B when A affects B in a manner contrary to B's interests'' (Lukes 1974, p. 34). Later, he adds that whether or not B is conscious of his interests is irrelevant. Thus, an analysis of the third face (or the third dimension) of power seeks to specify the means through which power influences, shapes, or determines conceptions of the necessities, possibilities, and strategies of challenge in situations of latent conflict. Such an analysis would include a study of myths, language, symbols and how they are shaped or manipulated by power processes. It would also delve into the area of "official ideologies'' and "social legitimations,'' i.e., the ways in which the powerful cloak the plans/programs they favor in ways that make them seem reasonable and worthy of consideration---even *necessary.* "It may involve, in short, locating the power processes behind the social construction of meaning and patterns that serve to get B to act and believe in a manner in which B otherwise might not, to A's benefit and B's detriment'' (Gaventa 1980, p. 16).

J. Allen Whitt's (1982) study of the transportation issue in Los Angeles illustrates the utility of going beyond a simple view of power. Whitt compared three different models of political power with one another in order to determine which best explains the empirical data. He argues that a class-dialectical model provides the best explanation for the data in his study. The class-dialectical model shares many features in common with Lukes' three dimensional model. It employs a view of power that stresses structural components while examining the built-in biases of political systems; it also resonates well with what we have referred to as the third dimension of power. Whitt (1982) argues that our whole system of transportation tends to be privatized "lending legitimacy and psychic inevitability to the idea that

automobiles are the most natural and efficient mode of transport'' (Whitt 1982, p. 204).

Another empirical study which Lukes (1974) says lies on the borderline of the two-dimensional and three-dimensional views of power is Matthew Crenson's study of air pollution politics. He concludes that the air pollution issue tends not to flourish in cities where industry enjoys a reputation for power (Crenson 1971). Lukes (1974) comments that, "Crenson's analysis is impressive. . .because there is reason to expect that, other things being equal, people would rather not be poisoned'' (Lukes 1974, p.45). We are reminded that *each dimension of power tends to reinforce the others.* As Lukes put it: "The dimensions of power, each with its sundry mechanisms, must be seen as interrelated in the totality of their impact'' (Lukes 1974, p. 20).

Another example of recent research which employs a power theory framework is that of Michael R. Reich's (1991) *Toxic Politics.* In his book Reich presents case studies of persons and communities who have been poisoned in one way or another by various toxics. Reich's study focuses on the difficulties involved in obtaining redress for grievances -after the fact. His study is important as it sheds light on the power processes at work which are similar to those encountered in our study of the Chemical Stockpile Disposal Program. However, the present study differs from Reich's (1971) in that we are looking at power processes that occur "before the fact'' rather than after an emergency has already occurred. This is one of the features that distinguishes the present work from that of others who have labored with a similar research problem.

2.8 State Power

Some of the most interesting debates in political science and sociology in the last few decades have to do with questions regarding the nature and character of state power. Questions regarding the nature and operation of state power have a direct bearing on the current research; therefore, it is necessary that we deal briefly with some of the important debates surrounding the subject of "the state." Ralph Miliband once said, "A theory of the state is also a theory of society and of the distribution of power in society" (Miliband 1969,p. 2). With that in mind we turn to a consideration of some of the major ways of thinking about the state and about the distribution of power therein. For the purposes of this study, we shall be speaking about "the modern state" which, admittedly is an abstraction, an *"ideal type" i.e.,* a model such as Max Weber described.

The modern state is a European, or more exactly, western European creation which emerged gradually in the course of the fifteenth and sixteenth centuries and found its first mature form in the seventeenth. It emerged in the same time period as, and is coincident with the development of capitalism (Lubasz, 1964). Miliband refers to the modern state as a *capitalist* state. In Jessop's words, the "determinate conjuncture" of the modern state of which we speak, is the fact that it is enmeshed in a capitalist economy. The western state system evolved along with capitalism; therefore, capitalism has influenced the character and nature of the modern state to which we refer in this work. Speaking about "the modern state," Heinz Lubasz wrote:

> The first thing to be said about the modern state is that it does not exist and never has existed. What has existed

> historically is a great number of modern states, with very varied constitutions, internal political lives, and international careers. When, therefore, we speak of *the modern state,* we speak of an abstraction concocted of common denominators, of features common to many or most such states much of the time, but certainly not to be met with in precisely the same forms in *all* such states. (Lubasz 1964, p. 1)

Lenin once commented on the "treacherous bog'' that characterizes theorizing about the state. In lecturing to his students, he remarked, "You will scarcely find another question which has been so confused, both deliberately and not, by representatives of bourgeois science, philosophy, jurisprudence, political economy and journalism, as the question of the state'' (Lenin 1929, p. .3). He remarked that, "it should first of all be noted that the state has not always existed. There was a time when there was no state'' (Lenin 1929, p.5). Later, he added: "History shows that *the state* as a special apparatus for coercing people arose wherever and whenever there appeared a division of society into classes'' (Lenin 1929, p.7).

The community power literature is not particularly helpful in understanding the operation of power at the national level in the modern state. Power in local communities is said to be fractionated and diffuse, by all accounts of the pluralists. However, pluralists do not confine their analysis of the nature of power to local community structures, but use this paradigm to explain the operation of state power as well.

Pluralists advocate methodological individualism which asserts that all hypotheses about human collectivities can and should ultimately be reduced to statements about individual agents. This implies that we can understand the operation of state power by studying the behavior of individual actors (Elster 1982; Lukes 1974). Expressing a similar idea, Lasswell

(1950) argued that the 'power of the state' cannot be understood in abstraction from the forms of power manifested in various types of interpersonal relations. Both of these reductionist views fail to capture the real nature of the state, for the state has an institutional quality that puts it beyond the pale of agency alone.

Weber argued that there was no one task which specifically determined the state. Therefore, one had to define the state in terms of the specific means which it employed and these means were, ultimately, physical force (Schwarzmantel 1987). "The state," Weber wrote, "is a human community that successfully claims the monopoly of the legitimate use of physical force within a given territory" (Weber 1970, p. 78). His view comes closer to a view of power that stresses its structural components. We maintain that the individual use of power cannot be held as a metaphor for state power.

In a paper dealing with the relation between capitalism and democracy, Jessop (1978) talks about the character of the state. He argues that: "In discussing the nature of the state, three points merit special emphasis: (a) the state is a structural ensemble rather than a subject; (b) the state is a system of political domination rather than a neutral instrument; and (c) state power is a complex social relation that reflects the changing balance of social forces in a determinate conjuncture" (Jessop 1978, p.11).

A review of the literature reveals that the state has been variously conceived: (a) as a force of divine origin, or as Hegel put it, "The idea made actual," part and parcel of God's journey towards self-realization" (Dunleavy and O'Leary 1987, p.7); (b) as an instrument of the ruling class ---"the instrumentalist," i.e., the Marxist view, or as Lenin put it, "as a machine for maintaining the rule of one class over another" (Lenin 1929, p.11); (c) as a

neutral agent (Birch 1964); (d) as an autonomous arbiter among contending "interest'' groups, i.e, "the broker state'' (Allison 1971; Halpern 1975); (e) as relatively autonomous (Skocpol 1980); (f) and as a fully autonomous entity (Block 1980); and (f) as a fully autonomous entity (Skocpol, 1993).

According to Dunleavy and O'Leary (1987), the pluralists really have no theory of the state. In their view, the state becomes a neutral or benign entity. Using the "weathervane'' or "cipher'' model described by Dunleavy and O'Leary (1987), pluralists assume that the state simply mirrors or responds to the balance of pressure group forces in civil society. State organizations are seen as mainly inert recipients of pressure from interest groups. This image suggests a state highly responsive to political parties. Dunleavy writes, "Cipher pluralists regard both elected politicians and administrative elites as malleable and passive people whose actions conform to the prevailing patterns of pressure'' (Dunleavy and O'Leary 1987, p. 51). On the other hand, in the "broker" state model, the state does not mirror its society, nor neutrally follow the public interest; it is an interest group state in which elected party government is only 'first amongst equals, as if contending groups were equally balanced---which is not the general pluralist assumption, as Dunleavy reminds us (1987, p. 47). The broker state is not passive, neutral, or a black box. It should be noted, however, that much goes on outside political parties and the electoral process, a fact which the pluralists summarily dismiss out of hand as either non-existent or as unimportant, i.e., trivial.

Contrasting these views are those of the Marxist school. Marx and Engles expressed their basic premise on the nature of the state in *The Communist Manifesto*: (1848): "The executive of the modern state is but a

committee for managing the common affairs of the whole bourgeoisie'' (Marx and Engles {1848} 1971). Three perspectives have characterized work on the state in the Marxist tradition. They are: (1) the instrumentalists; (2) the structuralists ; and (3) the Hegelian-Marxists. Gold, Lo and Wright (1975) argue that, "Regardless of which of these traditions is drawn upon most heavily, virtually all Marxist treatments of the state begin with the fundamental observation that the state in capitalist society broadly serves the interests of the capitalist class'' (Gold, et al. 1975, p. 31).

The classic instrumentalist position as originally articulated by Marx and Engles says the state is the instrument of the bourgeoisie (Baran and Sweezy 1966; Domhoff 1967; Miliband 1969; Mills 1956). From this perspective, the ruling class is seen to utilize the government rather directly for its own benefit. It should be noted, however, that Domhoff vigorously denies being a member of this camp. In an article entitled, 'I am not an Instrumentalist,'' Domhoff insisted that instead of focusing solely on the political power of the capitalist class he made *class struggle* (italics mine) basic to his analysis (Domhoff 1976). Structuralists stress the "relative autonomy'' of the state. While still retaining the overall context of the determinant nature of the objective capitalist environment, structuralists seek to elaborate how state policy is determined by the contradictions and constraints of the capitalist system, while instrumental manipulation remains a secondary consideration. Two of its most well-known formulators are Nicos Poulantzas (Poulantzas 1973; Poulantzas 1974; Poulantzas 1975) and Louis Althusser (Althusser 1971).

The Hegelian-Marxist tradition places its emphasis on consciousness and ideology while the link to accumulation and instrumental manipulation

stays in the background. To the question, "What is the state?'' the Hegelian-Marxist answers that the state is a mystification --- a concrete institution which serves the interests of the dominant class but which seeks to portray itself as serving the nation as a whole thereby obscuring the basic lines of antagonism.

With respect to the present study, the relative autonomy position appears to be the best fit. The Army seems to operate quite automously from the direct control of capitalists, yet it is the capitalist sector that the Army defends.

2.8.1 The Problem of Centralization

A number of political theorists argue that state activity has grown in scope and become increasingly centralized (Dunleavy and O'Leary 1987). In the United States, this trend has historical roots in the early days of the republic in the split between the Federalists and the Anti-Federalists. From 1776 to 1787 America under the Articles of Confederation was, in reality, no more than a loose alliance of sovereign independent states. Most Americans agreed with John Adams who wrote, "No one thought of consolidating the vast continent under one national government'' (Butterfield 1962, p. 352). The inalienable rights to life, liberty and the pursuit of happiness referred to in the Declaration of Independence were, it was assumed, best protected by small and local state governments. Kramnick asserted that, "The spirit of Rousseau hovered over these Anti-Federalists as they identified with small, simple, face-to-face, uniform societies'' (Kramnick 1987, p. 60). The federal government was formed only to defend the whole against foreign nations in case of war and to defend the lesser states against the ambitions of the larger.

The Confederation was seen merely a temporary expedient, required to wage war against Britain, which would fade with the coming of peace. (Kramnick 1987).

The Continental Congress was the sole integrative institution created at the center under the Articles. With the cessation of hostilities in 1783, the Continental Congress became virtually impotent with all effective power residing in the states. Additionally, there was no executive branch provided for the central government by the Articles. "The Revolution, after all, was against authority and power" (Kramnick 1987, p.19). In one after another state constitution drafted after 1776 a clear expression of the "politics of liberty" was the fear of rulers and of magisterial authority. The new state constitutions also severely limited grants of executive authority. With the exception of one state, South Carolina, all the new state constitutions totally eliminated any role for the governors in the legislative process. It became common practice to require that any changes in the state constitution be approved not by the state legislatures but by the people themselves in convention. Kramnick writes that:

> the 'politics of liberty' under the Articles. . . expressed itself in an aggressive egalitarianism. The suffrage was extended from 1776 to 1789 in most states so that from 70 to 90 percent of all white adult males became eligible to vote. Religious oaths were completely eliminated (Kramnick 1987 , p. 23).

Many voices arose lamenting this egalitarianism, e.g., John Otis had warned in 1776 that "when the pot boils the scum will rise," a frequently used metaphor for the "politics of liberty" under the Articles. In 1788 Madison wrote that the state legislatures were filled with "men without reading, experience or principle" (Kramnick {1788}1987, p. 24). They were men whom

Jay, his fellow author of the *Federalist*, thought "wisdom would have left in obscurity" (Wood 1972, p. 476).

Kramnick argues that virtually all traditional notions of the separation of powers were abandoned in the states under the Articles. In the Pennsylvania constitution, bills could not become law until after their first reading in the legislature; they were then publicized throughout the state, discussed and approved by local conventions and then voted upon in the next legislative session. "The very notion of representation, of being governed by officials, even *elected* officials, however frequently elected, came under attack in the states" (Kramnick {1788} 1987 , p. 22). In many states the legislatures had virtually taken over the administration of justice. In Vermont, for example, the legislature reversed many court judgments, stayed executions, and even intervened in cases involving land titles, contracts and debt. The state legislatures appeared to many to be tyrants in liberty's cloak, even causing Thomas Jefferson to comment that, "One hundred seventy-three despots would surely be as oppressive as one. . . An elective despotism was not the government we fought for" (Thomas Jefferson, *Notes on the State of Virginia*, p. 195 as cited in Kramnick 1987,p. 310). Jefferson forcefully supported the idea of the separation of powers embodied in the new Constitution. He saw this system of checks and balances as essential to preserving liberty. It was this problem of limiting state power that ultimately consumed Jefferson and about which he wrote so eloquently.

The Articles of Confederation were ultimately replaced in 1787 by the Constitution. The fear of popular sovereignty, combined with the severe financial crises faced by most states after the war, created an atmosphere where the ideas embodied by the federalists seemed the only logical solution.

The new Constitution represented the triumph of the center over the periphery, and Madison, writing in Federalist No. 10, left no doubt that the new Constitution with its eclipse of the periphery and shift of power to the central government would "secure the national councils against any danger from . . .a rage for paper money, for an abolition of debts, for an equal division of property, or for any other improper or wicked project'' (Boyd 1950,p. 246).

The trend toward centralization has continued throughout our history, and intensified after the second world war. It is an integral feature of the modern state. Numerous writers have shared the view of the inevitability of centralization, for example, George Orwell warned, "What is coming is the centralized state, and the new World War will only hasten its arrival'' (Orwell 1992, p. 193). Additionally, Dunleavy observed that, "Weber and later organization theorists shared the common assumption that a single hierarchical ordering of the state organizations is an ineluctable, but generally desirable, feature of the modern state'' (Dunleavy and O'Leary 1987, p. 176).

Poulantzas (1978) identified the rise of authoritarian statism as the principal trend in contemporary liberal democratic politics and defined it as "intensified state control over every sphere of socio-economic life combined with a radical decline of the institutions of political democracy, and with draconian and multiform curtailment of so-called "formal" liberties" (Poulantzas 1978, pp. 203-4). Commenting on the consequences of this trend towards centralization, C.W. Mills once wrote, "That the facilities of power are enormously enlarged and decisively centralized means that the decisions of small groups are now more consequential'' (Mills 1956, p. 23).

2.8.2 The Rise of the Pentagon

One area of state power that has received scant attention in the literature is that of the Pentagon. Mills (1956) was writing about the time of post-WWII America when the growing power of what President Dwight D. Eisenhower termed the "military industrial complex'' was beginning to be recognized. Mills (1956) argued "that postwar military elites wielded unprecedented influence and have joined with the directors of capitalist firms and high-ranking civilians in the federal government to form the power elite'' (Mills 1956, pp. 212-13).

While Mills has been criticized for offering an overly-psychological interpretation of power elites, many agree with his claim the the military has played a relatively autonomous role in the postwar structure of state power. In a recent article dealing with the unprecedented and largely unexamined rise in the power of the Pentagon, Gregory Hooks (1990) decries the fact that the Pentagon's significant (though not unlimited) power and its implementation of a "de facto'' industrial policy have received insufficient attention. He argues that despite the fact that the military "in theory" is subservient to the Congress, it has become relatively autonomous, a fact alluded to by C.W. Mills in 1956 when he wrote, "Since Pearl Harbor those who command the enlarged means of American violence have come to possess considerable autonomy, as well as great influence, among their political and economic colleagues'' (Mills 1956, p. 198). Hooks argues that the Pentagon has established a "de facto" industrial policy and is, for all intents and purposes an autarky --- a separate, autonomous entity capable of independent action, garnering enormous resources and setting its own

agenda. Hooks examines the microelectronics and the aeronautics industries and concludes that military requirements are increasingly at odds with the industry's commercial development. He contends that the defense program hinders the competitiveness of U.S. firms. "As noted," Hooks writes, "in the case studies of aeronautics and microelectronics, the Pentagon has been the dominant influence in research and development, but its goals have been and continue to be remote from civilian applications" (Hooks 1990, p. 399). This, he concludes is a clear case of the state's pursuing an agenda distinct from that of the dominant class. In making this claim, Hooks overlooks an important fact about state power namely "that the different elements of the state need not be in harmony" (Schwarzmantel 1987,p. 4). Whatever the relative merits of Hooks' analysis may be, he makes one point that is relevant to the present study, and that is an appreciation for the enormous power (about which we know very little) wielded by the Pentagon (see Hooks for a review of the literature).

2.9 Summary

The following work is divided up into seven chapters each treating a separate issue relating to the Chemical Stockpile Disposal Program. Chapter One will present an overview of the Chemical Stockpile Disposal Program (CSDP) as well as a glimpse at the historical record in terms of use of chemical weapons throughout various cultures throughout history. It will also discuss the framework for the Army's initial decision to use on-site incineration as the technology of choice. Chapter two will discuss the various theoretical orientations that guide the research, namely, the Three Dimensions of Power framework developed by Steven Lukes, Bachrach & Baratz and Gaventa. In

Chapter three we will look at the history and dynamics of the citizen opposition movement that developed in Kentucky at the Lexington-Bluegrass Army Depot (LBAD), specifically in Berea and Richmond, KY. as well as the seven other sites. We will also touch upon the international dimensions of the problem. Chapter four will deal specifically with the regulatory process, specifically The National Environmental Policy Act (NEPA) and the various "extra-legal'' devices the Army developed to deal with citizen unrest. Chapter five deals with Army discourse surrounding the issue. We explore various myths, ideologies and

legitimating devices employed by the Army in defense of their decision to incinerate the weapons/munitions. Chapter six describes the ponderous propaganda machine that evolved in unison with CSEPP ---the Army's national protective action program which has been developed in conjunction with the Federal Emergency Management Corporation (FEMA). Chapter seven investigates the potential theoretical import of the research, discusses possible limitations of the study and poses some questions for further research.

Chapter 3

The People of Madison County: 'Causing a Great Tumult'

> Suffer not yourselves to be betrayed with a kiss. . . Shall we try argument? Sir, we have been trying that for the last ten years. . .Shall we resort to entreaty and humble supplication? What terms shall we find, which have not been already exhausted? We have petitioned---we have remonstrated---we have supplicated---we have prostrated ourselves before the throne. . .There is no longer any room for hope. I wish to be free. . .Is life so dear, or peace so sweet as to be purchased at the price of slavery? Forbid it Almighty God! I know not what course others may take, but as for me give me liberty or give me death!
>
> Patrick Henry, Richmond, Virginia. St. John's Church, March 23, 1775 (in Fawn M. Brodie. 1974. *Thomas Jefferson: An Intimate History*, p. 122)

3.1 A Short History of Two Small Places --- Richmond and Berea, KY.

With very little modification, Patrick Henry's famous speech delivered in Richmond, Virginia could serve as emblematic of the struggle with the Army over the chemical weapons destruction program that began in Richmond, Kentucky two centuries later. Although the towns of Berea and Richmond evolved differently, their destinies are intertwined and an examination of their early history provides the necessary cultural context which should help shed light on the conduct of the present controversy.

Berea and Richmond are in Madison County, Kentucky, which is situated only three miles from the Cumberland Plateau. The Bluegrass section of Madison County, Kentucky lies in Eastern Kentucky 130 miles south of Cincinnati, Ohio, and 40 miles southeast of Lexington. Madison County Kentucky is known for two things: Berea College and the Lexington-

Bluegrass Army Depot (LBAD). Richmond, which borders LBAD on the northwest, is the county's largest city. Berea is eight miles southwest of the Depot. The 1990 census figures estimate that roughly 57,000 people reside in Madison County, of that number, 9,126 live in Berea and 21, 155 in Richmond (U. S. Department of Commerce, Bureau of the Census, 1990, Washington, D. C.).

The citizens of Madison County, Kentucky are no strangers to controversy. The early histories of Berea and Richmond, KY are intertwined in a way that makes their present cooperation on the nerve gas issue seem improbable. Although both are allied in their current opposition to the Army's planned incinerator, they evolved quite differently, and colorful stories abound about the towns' early rivalries.

Berea evolved as the more liberal community; Richmond the more conservative. The leaders of the citizen opposition groups that formed in these cities reflect this dichotomy. The first, Concerned Citizens of Madison County (the Richmond group), is headed by two individuals whose roots go deep in the Richmond aristocracy--- the one a recognized community activist, the other a noted author, Harvard graduate and war correspondent. Common Ground, or the Kentucky Environmental Foundation, Inc., (the Berea Group) is lead by an experienced environmental activist and Vietnam War veteran. As principals in one of the nation's longest-running environmental struggles, these people do not suffer fools gladly. To those citizens of Madison County who attended one of the Army's first public meetings on this issue, it appeared to them that the Army had indeed sent fools to talk to the communities about their plan to destroy the chemical weapons that were in storage at the Army depot just a stones throw from an

elementary school and a major shopping mall. A brief history of each town will suffice to illustrate the context for the development of the present ethos of the groups that eventually formed to oppose the Army's stockpile disposal program.

Berea's history is bound up with with the founding of Berea College. Its roots go back to the Civil War period (1855). Cassius M. Clay, an influential land owner and rabid abolitionist, founded Berea College. Clay owned considerable land in the Bluegrass section of Madison County, Kentucky. In the early 1850s he sold off much of this land in an attempt "to demonstrate the advantages of life without slavery" (Peck 1982, p. 1). In 1855, Clay hired John G. Fee, a country minister---also an abolitionist---to head a school based on Clay's ideals of freedom and democracy. A one-room school was built in 1855 which eventually became Berea College. The constitution of Berea College reads, "This college shall be under an influence strictly Christian, and as such, opposed to sectarianism, slaveholding, caste, and every other wrong institution or practice" (Berea College Admissions Brochure, July 1991, p. 4). It was the first college to integrate after the Civil War and to this day remains true to the ideals of its founders. Tuition is kept to a minimum. Student expenses for tuition, room and board, health and incidental fees are $2,245. Every student works at least 10 hours a week in any one of a number of affiliated student industries, e.g., the famous Boone Tavern Hotel, located prominently in the city square, is staffed 80% with Berea College students.

The City of Berea has gained national recognition as a haven for artists, and small artisan shops decorate its main streets. Berea has become known as a citadel of Appalachian Crafts and a repository for many otherwise lost arts.

The City attracts thousands of visitors yearly and hosts several seasonal craft fairs. The college has really been the driving force behind the culture that later developed in Berea which includes an emphasis on face-to-face contact, stresses economy of scale (there are numerous small family-owned businesses), and makes social justice issues of paramount importance. It has much in common with what Ferdinand Toennies ({1887} 1963), the German sociologist, described as a *Gemeinschaft* society. *The Berea Interfaith Task Force for Peace*, a local organization which meets monthly and is devoted to peace and justice issues, is one example of the town's culture. Many of its citizens share a heightened interest in environmental issues, harbor a strong commitment to the idea of "community" and many take an active interest in local politics. This is a politically aware community. It is not at all unusual to have issues of concern hotly debated in the local newspaper, *The Berea Citizen*, or at Papa Lino's restaurant, a small deli which serves as a gathering place for locals. Citizens take an active interest in examining <u>any</u> new initiatives that may affect this small community, whether that be a question regarding the installation of bicycle paths along the main thoroughfare, recycling trash, or how to dispose of the nerve gas stored at the Lexington-Bluegrass Army Depot. If there were one concept that sums up the *weltanschauung* of Berea, it would be "Question Authority!"

Richmond, on the other hand evolved as a more conservative community, and members of the group "Concerned Citizens of Madison County" describe themselves as "solid citizens." The roots of the city of Richmond date back to the days of the American Revolution around 1775. According to a history of Madison County, those pioneers, once established, "formed a close-knit coterie of families and gathered unto themselves control

of local government, commerce and central institutions'' (Ellis 1985,p. xv). The original settlers, ninety percent of whom were from Virginia, (the balance were from the Carolinas) were mainly farmers, hunters and perhaps a few businessmen. According to the archivist in charge of Special Collections at Eastern Kentucky University, most had fought in the revolution and had been given land in return for their service. They first settled along the Kentucky River in a town called "Boonesborough,'' named, of course, for the celebrated Daniel Boone. However, they soon became disenchanted with Boonesborough and in 1790 relocated to Richmond. Richmond, was not, however, the original county seat --- that was Milford (1786). There arose a dispute over whether to move the county seat from Milford to Richmond. The dispute was settled by a wrestling match (Ellis 1985). Incidentally, the Kennedy family was instrumental in the first settlement of Richmond, Joseph Kennedy being its first sheriff! Key members of Concerned Citizens of Madison County are descendants of these first families, and as such, they have a fierce attachment to the land. What this means is that they love the land, they are attached to the land, and they will defend the integrity of the land to the bitter end. Ellis (1985) has written, "If there is any one social and cultural characteristic which has been historically notable among Kentuckians generally it has been their ready and positive identification with a specific physical place in the universe, their home county'' (Ellis 1985, p. xvi). He further qualified this statement by saying:

> They have attached their loyalties and sense of geography not so much to an area with political boundaries as to a specific social background and provincial rurality. In this vein they have sometimes been vehement in their reactions to broader state public issues, in casting their votes at

> the polls, and in reacting to conditions of changing times (Ellis 1985, p. xvi).

According to the the archivist in charge of Special Collections at the Berea College Library, Richmond and Berea share an historic rivalry which stems from their differing positions vis-a-vis the question of slavery. Richmond was steeped in a thriving 'slavocracy,' according to Ellis (1985), while Berea was home to missionaries who were rabid abolitionists. This set the stage for the bitter conflicts that ensued. One particular incident in the towns' early histories is illustrative of their early difficulties. The story is told that in 1859, after John Brown's raid, Rev. Fee spoke, "We need more John Brown's,'' he said, "if not in fact, at least in spirit.'' As the story goes, Fee was quoted out of context as only having said, "We need more John Browns!'' At that point, "sixty of the finest of Richmond's citizens horsed up and gave Fee thirty days to clear out.'' According to a Berea College archivist, "Rev. Fee and other founders of the college were often harassed by locals on drunken sprees (from Madison and surrounding counties) and, in 1859 a vigilante committee ordered them to leave. The governor refused to do anything. The committee forced Fee to pack up and ninety Bereans left after Christmas. This was known as "The Exile.'' They stayed away for the duration of the Civil War. According to a Berea historian, "The rivalry stems from the fact that we exist. Periodically, the rivalry surfaces in county politics.'' Ellis (1985) notes that despite such incidents, Madison County's "various social and economic groups, white and black, have lived together, with the exception of the Berea troubles, with little class conflict and rivalry'' (Ellis 1985, p. xvii).

To the dismay of many activists, the university located in Richmond, Eastern Kentucky University, has maintained a low profile concerning the CSDP. As one activist lamented, "This university {EKU} is the only major

institution that did not take a stand on incineration.'' Although EKU facilities have been used for a few public meetings, "official policy'' of the college has been one of silence on the issue. However, the faculty senate has publicly announced its support of the citizen opposition effort. On April 14, 1984, the *Richmond Register* carried a Letter to the Editor from the Chair of EKU's Faculty Senate. The letter read: "The Faculty Senate of Eastern Kentucky University urges that the aforementioned obsolete chemical weapons and agents be transported elsewhere, to a less populated area, for destruction'' (*Richmond Register*, 4/14/84, Editor's Mailbag).

Despite the Army's suppositions, there is no evidence to support the belief that Berea College is the moving force behind the citizen opposition that developed at the Lexington-Bluegrass Army Depot (LBAD) regarding the chemical weapons controversy. This is not a student issue. However, one cannot escape the notion that the culture of the towns, heavily influenced by their historical traditions, has created a climate supportive of citizen activism. A member of Common Ground offered this analysis of the differences between the two groups: "Their styles evolved out of this historical context. Berea considers itself the cultured folk; Richmond aren't sure the folks in Berea are quite upstanding.''

3.2 The Lexington-Bluegrass Army Depot (LBAD)

Located on U. S. Route 25, six miles south of Richmond, "LBAD,'' as it is commonly referred to in the literature, was established in Madison County, Kentucky in the early 1940s at about the same time the United States became involved in World War II. According to the DPEIS (1986), approximately 3,000 people live adjacent to the Northern boundary. LBAD stores the

smallest percentage of the unitary stockpile of chemical weapons (1.6%), consisting of approximately 70,000 M55 rockets containing nerve agent GB and VX. The rockets are stored in igloos (earth-bermed bunkers) and are carefully monitored for leaks. Madison County is very densely populated with 57,000 people living within a 10 k radius of LBAD. Additionaly, the depot is situated in the midst of a $5 billion dollar thoroughbred horse industry. The proposed incinerator complex is to be located one mile from the Clarke-Moores Middle School.

Originally the depot occupied two sites: one in Lexington and one in Richmond, i.e., the Bluegrass Depot. "The two sites were almost completely autonomous," according to an Army officer at LBAD, "as they each had different functions, however, they were under one commander" (Telephone interview: Chief Public Affairs Officer, LBAD, January 4, 1994). It is now referred to simply as the Bluegrass Army Depot. The weapons stored at the Bluegrass Depot at the Lexington facility have been phased out. Throughout this report, however, we will continue to refer to the Bluegrass Depot in Richmond, KY as LBAD as this is consistent with its use in documents relating to the CSDP.

The Mayor of Berea reports that the Depot was built in 1942 and that the Army took 15,000 acres. "At the time, there was very little opposition", he said. According to the Mayor, "many beautiful mansions were torn down." After WWII and the Korean War, LBAD became a storage depot. The last shipments of nerve gas came in 1962. According to a local political elite, "Nobody knew; nobody cared". "In the mid 1960s" he said, "they *{the Army}* started looking to get rid of it." The M55 rockets were brought to LBAD in

Richmond, KY by rail in the early to mid 1960s and have been in storage in igloos since then.

The Army was seen as a good neighbor for many years. During the war years, according to one Richmond long-time resident whose father was involved in the original construction of the Depot, "The Depot would send its fire truck out to help the community. The Ordinance (as the Depot is sometimes called) employed a lot of people---including women---during the war. There was no way that people would question the Army because they needed the jobs. There were no jobs!" Community/Army relations have changed since then.

As a general rule, the Army has a history of being less than candid with the public with respect to accidents resulting from Army operations. Citizens point to a particularly newsworthy event which took place in 1979 at LBAD which certainly has contributed to the erosion of the public trust once held by the Army at this site; however, it would be a *reductio ad absurdum* to suppose that this one incident was the driving force behind the citizen mobilization there. The incident we are referring to is known as "The Smoke Pot Incident." On August 16, 1979, a large dark cloud generated by the burning of 288 smoke pots moved over Peytontown, KY and on past to Interstate highway 75 where it slowed and stopped traffic. Forty-five persons were hospitalized for burning eyes, difficult breathing and general illness. Community residents suspected the fumes were coming from the depot, however, in calls to the Ordinance (i.e., LBAD), the Army at first denied any knowledge or responsibility for the incident. When later presented with evidence, the Army admitted that it was the source. As the story goes, an inventory of "smoke pots" had been declared obsolete and ordered to be

destroyed. However, because of the impending visit of the Inspector General, Army personnel began burning three times the usual number of smoke pots, resulting in this "off-post'' incident. *The Richmond Register* (June 27, 1980, Terry Lee Vogt) reported that, "Manpower shortages and inadequately trained personnel contributed to the smoke cloud incident.'' In recalling the incident, the Mayor of Berea, who is also a physician, said, "We didn't know what we were treating. Dr. Lang (his associate) called the Ordinance and the Army denied it.'' On another occasion, according to this informant, two cows and a deer were found dead. Blood samples were positive for nerve agent. Again, the Army originally denied responsibility and then later recanted their story. On October 18, 1982, traces of nerve agent GB were registered by monitoring equipment at the depot. However, no public announcement was made until October 21st, according to a newspaper account in *The Berea Citizen* (October 28, 1982, Jack Hall). The Army later contended that there was no actual leak but only a faulty reading of one of the gauges.

3.3 Army Credibility Problems

While these incidents surely contributed to the erosion of the Army's credibility at this particular site, there is a more general problem with Army candor regarding chemical accidents in general. The "Smoke Pot Incident'' is not an isolated incident. The Army has a history of denying responsibility for accidents. Two of the most egregious examples will suffice to make the point. The first incident occurred in March 1968 at the U. S. Army Dugway Proving Ground in Tooele, Utah when a chemical-warfare agent test went awry and accidently killed 6,000 sheep --- called "The Dugway Sheep Kill,'' the incident was reported in all the papers. Apparently, the sheep died as a result of

ingesting forage contaminated on March 13, 1968, with the chemical warfare agent VX (Van Kampen et al 1970). For over a year the Army refused to admit any responsibility for the deaths, however, mounting evidence forced them to admit some culpability. Eventually, "After seventeen months of steadfast denial, the U. S. Army finally admitted responsibility for the sheep kill incident'' (*Technology and Social Shock*, p. 365). The admission came during a Congressional Hearing in Washington during the summer of 1969. Several articles have been written about the incident in venues ranging from prestigeous academic journals to news magazines and newspaper stories (Van Kampen et al 1969,1970; Brodine 1969; Boffey 1968a,1968b; Tanaka 1988;*Science Magazine* 1989 and *Newsweek* 1969).

Another noteworthy incident where the Army was less than candid with the public occurred on April 18, 1986 at approximately 10: 15 A.M. when a Titan rocket exploded at Vandenburg Air Force Base near Lampoc, California. The explosion created an 8000 foot white-orange cloud of hydrazine rocket fuel. The sheriff's office called the Air Force base to confirm the occurrence of an explosion, but to no avail. Emergency personnel were hesitant to make any recommendations to the public due to uncertainty stemming from the lack of information about the explosion. Police, fire, and sheriff's department personnel were able to get information only through monitoring radio traffic. With very little information to guide them, emergency responders advised people to "stay put.'' Several hours later, the Air Force released a communication that a cloud of toxic gas was moving out to sea and posed no real danger (Rogers 1990, p. D-7).

3.4 The Army Decides

Though the Army incinerated chemical weapons during the 1970's, it did not put all of its eggs in the incinerator basket until 1982, when it selected thermal destruction as the method of choice for the destruction of the entire stockpile of M55 rockets. Seigel (1990) reports that "At the time, incineration seemed---to the Army, at least---like the quickest, cheapest, and simplest way to get the job done'' (Seigel 1990, p.4). "To a large degree, the Army's decision to use the reverse assembly, high temperature incineration process was based on the limited knowledge of disposal technologies in the 1980s,'' states a report coming from the General Accounting Office (GAO), the federal watchdog agency (*East Oregonian*, July 6, 1992). However, a number of concerned citizens argue that "incineration is a Neanderthal way of getting rid of waste.'' Nevertheless, in 1979, the Army began testing a pilot incinerator, i.e., The Chemical Agent Munitions Disposal System (CAMDS) at the Tooele Army Depot, near Salt Lake City, Utah. In 1982, the Army selected incineration as its demilitarization and disposal method for the entire M55 rocket stockpile. In 1985 when Congress passed PL 99-145 expanding the scope of the destruction program to the entire unitary stockpile at all eight sites, the Army had already committed a large portion of its energy and resources to incineration technology. As one activist put it, "It {the Army} is such a big bureaucracy and its got an awful lot of momentum built up. Literally thousands of people are involved. Many people's entire professional careers ride on the success of this program.''

In the summer of 1984, the Army took its plan to the people. Several teams of Army personnel traveled around the country from depot site to depot site telling the people of its plan to build nerve-gas incinerators in the

communities that host the aging stockpile. They encountered pretty much what they expected at most of the depot sites, i. e. apathy and/or acquiescence--but not in Kentucky. As one informant explained:

> Previously, this group of Army personnel had been in Anniston the night before and 15 people showed up. They *{The Army}* carried on for perhaps two hours before anyone could talk. They used overheads and sketches. This attorney, Charles Coy, stood in the back of the room. He listened (8 P.M.-3 A.M. !); he asked to speak. He said, "I don't need a microphone." He said, "If you will observe, you have misspelled 'demilitarization.'" It brought the house down. From that we set up Concerned Citizens.

The Army representatives were not prepared for what they found in Kentucky. "We're used to being the guys in white hats," said an Army technical expert. Then he added, "I've never seen anything like this before." (*Courier Journal*, July 11, 1984). Specifically, the meeting was to discuss the final disposition of the 69, 512 M55 rockets containing nerve agents GB and VX which had been stored at the depot since the mid sixties, and which the Army claimed were leaking dangerously. As soon as news of the Army's impending plan reached the local newspapers, the surprised and shocked citizenry immediately began telephoning neighbors and friends and in a short time, a fairly sizeable segment of the local population was alerted to the meeting. One activist who participated in mobilizing the community at that time proudly reported, "We got 500 people to show up!" Another member of Concerned Citizens had this to say about these early public meetings: "The Army sent around a team of people who had only master's degrees in science. We were left with the impression that you wouldn't buy a used car from

these people.'' After what was described by many as a "canned presentation,'' one member of Concerned Citizens vividly recalled that first Army briefing.

> After the presentation, the public comment period opened. It hit me that these guys were serious about building an incinerator to burn nerve gas. Their disclaimer was that this was to be the first in {a series of public hearings on the issue}. . . Immediately after the presentation, I realized that they had already decided. The decision had already been made.

But the Army assured citizens that they were there to take "input'' from the public and stated that no decision had yet been made on the disposition of the stockpile. A decision was to be forthcoming pending the results of the Army's M-55 Rocket Assessment Program. At one point during this early period, Amoretta Hoeber, the Deputy Assistant Secretary of the Army, came down to LBAD (Kentucky) to meet with the citizens. The meeting was set up at the Army Depot cafeteria. As one resident recalled:

> She came into the cafeteria...She came across as if to say, 'Look, what we are doing is the best that can be done and you peasants ought to be glad. We must all bite the bullet' she said, as she stepped on to the plane to fly back to Washington at taxpayers expense.

3.5 The Army Delays Announcement

On March 7, 1985, a headline appeared in the *Lexington-Herald Leader* that read: "ARMY IS DELAYING NERVE-GAS DECISION.'' The story went on to discuss the fact that the Army decision on the final disposition of the 70,000 nerve-gas rockets stored at LBAD would be delayed for at least nine more months. Rep. Larry Hopkins, R. Lexington, KY., and ranking member of the House Armed Services Committee, expressed frustration with the delays. "The Army was very quick to drop an incinerator proposal on us a

year ago," he said. The Mayor of Berea reacted differently to the delays. He said, "We've got the upper hand now. . . I think this delay has made us more determined to get some answers." Hopkins remarked that, "When we began questioning that decision {to incinerate the rockets on site}, we got nothing but delays and failure to make deadlines." One of the co-founders of Concerned Citizens speculated that the Army's delayed decision was deliberate. It was suggested that the delay might be a sham. She said that she "worried that the Army was attempting to slow down the process to see whether people would lose interest." Other people blamed the delays on the untimely death (January 14, 1985) of Brig. General Bobby Robinson. Gen. Robinson was the chief spokesperson for the Army and principal liaison officer with the communities hosting the stockpiles. (*Lexington-Herald Leader*: March 7, 1985).

The Army's Draft Programmatic Environmental Impact Statement, released July 1, 1986, indicated that it had not made a final decision, but only a tentative one, and that circumstances could lead them to change their mind (See Executive Summary, page xv of the Report styled Chemical Stockpile Disposal Program Draft Programmatic Environmental Impact Statement, July 1, 1986). A final decision, called the Record of Decision (ROD), was issued on January 30, 1987 and presented to Congress in February 1988. The ROD indicated that on-site destruction was the Army's "preferred alternative." That meant incineration. In a comment which typifies the Army's insouciance regarding the community's fears about incineration in the early years of this struggle, Amoretta M. Hoeber, the Deputy Under Secretary of the Army wrote in a letter to a member of Concerned Citizens, "Incineration is the safest, most efficient, and most environmentally acceptable method for

destroying nerve agents today'' (19 March 1986, Letter to member of CC from Amoretta M. Hoeber, Department of the Army).

3.6 INCINERATION . .NOT! Grassroots Opposition to Incineration

Citizen opposition movements to the siting of hazardous waste incinerators, often known by the label "NIMBY'' for "not-in-my-backyard'' have become a familiar feature of the American political landscape in the 1980s and 1990s. However, incineration has not been confined to land-based facilities. In the United States during the mid-1980s, ocean incineration emerged as one of the most hotly debated issues within the emotionally charged field of hazardous waste management. Incineration of hazardous wastes at sea was proposed as a technology that would helpl solve the unique handling and disposal problems posed by liquid organic wastes (Bailey and Faupel 1989). Bailey and Faupel (1989) argue that opponents of ocean incineration were extraordinarily effective in blocking adoption of a new technology that had been clearly favored by the EPA and powerful industry interests. They recognized four factors as being crucial to their success: (1) opponents were convinced that local risks far outweighed any conceivable local gains; (2) there was broad-based opposition; (3) they engaged in coalition-building with other environmental groups; (4) there existed a complex legal environment, e. g., operations at sea are governed by international laws, including the 1972 London Dumping Convention, to which the United States is a signatory (EPA, 1985d).

In more recent times, the most famous of the "not-in-my-backyard" movements is focused on closing down the Waste Technologies Industries (WTI) facility, in East Liverpool, Ohio which is the largest commercial hazardous waste facilitly in the world. In 1992, twenty residents staged a

hunger strike to protest lack of EPA action regarding their grievances against WTI (Pittsburgh Against Toxic Incineration Newsletter, no date).

At the forefront of these efforts is an organization called Citizens' Clearning House for Hazardous Wastes or CCHW. CCHW was started in 1981 by a housewife, Lois Marie Gibbs. The clearinghouse provides information, organizing assistance, outreach and technical assistance to groups attempting to mobilize in opposition to any of several environmentally questionable projects, and their work includes efforts to assist those who oppose incineration as well.

As a result of these citizen movements, it has become increasingly difficult to *site* hazardous waste facilities. In instance after instance, citizen opposition has succeeded in either delaying or in outright preventing the siting of incinerators. Benford (1993) points out that public conflict over siting noxious facilities is the rule rather than the exception and the number of studies devoted to this topic has proliferated (Wolpert et al 1972; Centaur Associates 1979; Ley and Mercer 1980; Mazur 1981; Smith and Hanham 1981; Powell 1984; Mitchell and Carson 1986; Cairncross 1990; Freudenburg and Pastor 1992; Bailey and Faupel 1992).

Counterposed to the growing incinerator industry is the dual problem of the contraction of landfills. According to reports, NIMBY movements have forced the closing of over two-thirds of the operating landfills since 1979 (Wasson, 1987; Frumkin 1989; EPA 1979). As a result, much has been written on the subject of how to encourage community acceptance (Anderson 1977; O'Hare 1977; Powell 1984; Sorensen et al 1984; Carnes 1982, 1983; Inhaber 1992). Several studies have dealt with community organizing efforts (Wilson 1989; Knoll 1990; Hudson 1990; Christrup 1990; Thompson 1990), and Cohn

(1982) who has done a critical review of the literature. However, Ladd and Laska (1991) point out that there is a lacuna in the literature with respect to the "pre-implementation" phase of siting controversies. Their research addresses this problem in a study of a Louisiana community faced with a proposal to build an incinerator in its backyard. Freudenburg and Grambling (1990) support their critique and have urged sociologists not to ignore the "impacts that take place before the first shovel of dirt is turned" (Freudenburg and Grambling 1990, p. 2). Reich (1991) argues that although a number of single-case studies exist for a number of chemical disasters for Love Canal (Levine 1982), Bhopal (Shrivastava 1987), Seveso (Conti 1977; Whiteside 1979), and Michigan's PBBs (Chen 1979; Eggington 1980), "none adopts an explicitly comparative approach and none places the issues of power and powerlessness at the center of the analysis" (Reich 1991, p. 14). The present research is an attempt to satisfy the needs expressed by Freudenberg and Grambling (1990) and those of Reich (1991) by presenting a case study of the "pre-implemention" phase of a siting controversy where the issue of power and powerlessness is at the center of the analysis.

3.7 The Emergence of Grassroots Opposition to the CSDP

Four entities emerged in Kentucky in opposition to the Army's plan to build a nerve-gas incinerator complex in Madison County, Kentucky. There were two major groups, "Concerned Citizens of Madison County" and "Common Ground: Kentuckians for Moving the Nerve Gas" (which later evolved into the Kentucky Environmental Foundation, Inc. {KEF}), and two smaller groups, "Other Voices" and "Common Ground of Fayette County." While Concerned Citizens and Common Ground hold the high-ground in

terms of visibility in this struggle, we feel that these other groups also deserve to be included in the chronicling of citizen activism at LBAD.

3.7.1 Concerned Citizens of Madison County

If one were to try and pinpoint the beginning of the opposition movement in Kentucky, it would most likely be February 16, 1984. "Concerned Citizens of Madison County" was the name chosen by the first group to become active. They mobilized almost immediately and as a direct result of the Army's first public briefing. One of the founding members of Concerned Citizens observed, "We were the only game in town then (1984)." The first meetings took place in the office of a photographer. One of the founders of Concerned Citizens described their fledgling mobilization efforts: "We were trying to figure out how to get a grip on this issue," she said. "We were educating ourselves. We were totally away from any national interest. Congressman Hopkins got involved; Robert Rangel was appointed by Hopkins to keep us informed."

Philosophically, Concerned Citizens are very different from the other group: the former conservative and wanting to play "by the rules" and the latter of a decidedly more liberal bent, claiming to have more global environmental concerns. In describing their different philosophies or "styles,"one of the founders of Concerned Citizens said, "They {Common Ground}want the Army scalped; I want the threat lifted from this community." Despite their differences, which in many cases are strengths, the groups have worked together successfully for almost nine years. Their complementarity has allowed them to reach different constituencies and through their various and sundry social networks, enabled them to put

together a fairly formidable force in opposition to the Army's plan. However, despite appearances to the contrary, Concerned Citizens and Common Ground are both tied ideologically and culturally to the prevailing system of power. Both view the Army's incineration decision as a "glitch" in the system rather than as a direct result of the operation of the system, although some members of Common Ground would dispute this allusion to their being in the "mainstream." One of the co-founders of Concerned Citizens expressed their ideology quite succinctly: "When all is said and done," he said, " we have civilian control of the military in this country, and the Army's plans can be changed as they need be, if enough of us will speak up and let our elected officials know how we feel" (*Richmond Register*, January 26, 1988, p. 1).

The Steering Committee of Concerned Citizens is drawn heavily from upper middle class families who are also long-time residents of Richmond. In fact, several families of founding members are distinctly upper class. This is not the typical profile of citizens who protest against the government; and Concerned Citizens are preoccupied that they not create the impression of "Army bashing." There is a strong belief here that "the system works;" hence their strident attempts to put pressure on elected officials to reel in the Army and make them accountable. But one can also discern a growing disenchantment with the "system" as the perception grew that the avenues set up for citizen participation were simply props. As one activist put it, "We have lost all faith in the process as meaningful to the decision, other than it builds up in their minds as 'The Scoping Game.'"

Among members of Concerned Citizens of Madison County, there is a famous author, Harvard graduate and former war correspondent; the

daughter of a bank president who is an avid environmental and social activist, a homemaker, a photographer, two real estate brokers, a city magistrate, an insurance executive, the Mayor of Berea (who is also a physician), the Chief of Staff of the Pattie A. Clay Hospital, a retired newspaper reporter; a current newspaper reporter, a prominent orthodontist, two professors at Eastern Kentucky University (EKU), the president of a small environmental company etc. One of the founders likes to point out that both Republicans and Democrats fill their ranks and notes with pride, that within the functioning of the group, women have equal status with men. There is a fierce sense of community here, as in Berea. One of the founders of Concerned Citizens describes their early beginnings:

> The notice about a public meeting appeared as a small notice in an obscure part of the newspaper. They *{The Army}* do not do one bit more or less than they are required to do. The article said: 'The Army plans to do this and you are invited to come and hear about what we are going to do.'

Lifestyle tends to determine how much time members can devote to the group's work. Members assert that the group shares a certain rapport that has developed as a result of friendships that span decades. They speak about the high degree of trust which allows them to openly disagree without fear of being ridiculed or shut out of the group. "We've been through a lot together," one member mused, "we have a lot of respect." They also describe their meetings as "very disorganized in an organized sort of way." "We listen to each other. . . sometimes we agree to disagree." This informant confessed that she has walked out of meetings many times because of frustration. Still, Concerned Citizens goes on. They grabbed hold of this issue like a ferret on a

snake and the Army has not been successful in dislodging them even though they have tried many times to "redirect" their energy into more "acceptable" channels.

Concerned Citizens have been on the cutting edge of this issue from its inception and have been responsible for bringing the citizens' concerns to the attention of decision makers at the state level, in the Pentagon and in Congress. Their strategies have focused primarily on intensive letter-writing campaigns---financed at their own expense---and lobbying efforts directed at local, state and federal officials both at the Pentagon and in Congress. It wa through the efforts of the founders of Concerned Citizens that a very prominent law firm in Lexington, Kentucky allowed one of its finest attorneys to do a considerable amount of *pro bono* work for the movement.

Summing up their resolve, one long-time resident of Richmond and prominent member of Concerned Citizens said, "I think we all pretty much know, we are not leaving and we are not living with an on-going incinerator. Our great grandparents lived here."

3.7.2 Common Ground: Kentuckians for Moving the Nerve Gas

Although Concerned Citizens had been around for several years, citizens of Berea were also becoming heavily involved in the nerve gas controversy. It was becoming obvious to concerned residents of the Berea community that another group was needed---one that represented their unique perspective on the issue. In the Fall of 1987, a second group formed at LBAD (Kentucky) calling itself, "Common Ground: Kentuckians for Moving the Nerve Gas." As the name implied, their early efforts were focused on getting the Army to transport the weapons out of LBAD and away from that

community. According to a member of the Steering Committee of Common Ground, the name "was chosen to emphasize the commonalties of the two groups {i. e., Concerned Citizens of Madison County and Common Ground} despite their ideological differences. An activist who spoke out at the Army's 1984 briefing, commented later, "It dawned on me rather quickly that the powers that be were counting on the acceptance (quiescence) of their idea because of their prestige." He recalled an incident which precipitated not only his own entrance into the struggle, but also set the stage for the later formation of Common Ground. He recalled:

> I got up to speak. I said I was a veteran and so I had some insight into how the Army operates generally. I felt that the people in the community were being shortchanged. I felt they were not being told the whole story. I felt that if people knew more, they would not allow the Army to go ahead with this plan unchallenged. Everyone stood up and clapped. It was my cameo performance. The response was overwhelming.

As this brief example illustrates, charismatic leaders have played a significant role in the formation of the opposition groups at LBAD. In fact, both groups have their share of charismatic leaders. It could easily be argued that the Steering Committees of both groups are comprised of nothing but charismatic personalities. At the very least, they are all leaders in their own right. Although very different in their styles, the groups have been able to use their differences to their advantage, drawing upon very diverse constituencies and serving as reality checks on the Army's various pronouncements and documents. However, this is not to say that the emergence of strong personalities is responsible for the emergence of these

key opposition groups. The very strong pre-existing social network ties are at least as important (if not more) in the mobilization of these groups.

As interest in the controversy grew more and more intense, an activist gave this account of her experiences at a Steering Committee meeting of Concerned Citizens. As she explains it:

> I went to a meeting. Nobody was interested in who I was. They had their own agenda. This was about power. To them it was a *technical* problem. I was concerned that people couldn't get involved. They {CCs} didn't want to face the fact that they... I brought it up...the idea of doing a petition drive to bring this to the attention of the public. Our Peace group worked on the petition drive. We were a little group of 10. We obtained 7000 signatures. We did it very intensely--one month. It illucidated the issue.

Later, she added, "I just couldn't see any way for ordinary people to get involved in the Concerned Citizens group." It became obvious that a new group was needed to accommodate Berea citizens' concerns. "What I was looking for," she confessed, "was a totally different style...We made efforts to involve people." However, another member remarked that, "this was never seen as a group in antagonism to Concerned Citizens." Common Ground advertised their meetings in the newspaper, held their meetings in the local bank and opened meetings up to the public immediately. "Once the group got established, we would have meetings ad hoc," according to one of the founding members. Speaking about the differences between Common Ground and Concerned Citizens this respondent replied: "Concerned Citizens are more affluent (some have been here for generations); Common Ground are more transplants. Many are not even Kentuckians; however they have strong ties to the community." As one member expressed it:

> Common Ground is more grassroots type---concerned with public education, public awareness of the issue. If the nerve gas is moved, Concerned Citizens would dissolve. Common Ground have broader goals. They oppose incineration; whereas the focus of Concerned Citizens is completely local. Common Ground has more global concerns.

Another member of Common Ground made this observation about the differences in their strategies: He said, "They {Concerned Citizens} believe they can win this way. Their political strategies are based on small-town Kentucky politics. Strategy equals Good Ole' Boy--Sit Down and Talk..."

While Concerned Citizens' social network ties include a small cadre of very close friends and business acquaintances, Common Ground draws members from a social network that revolves around a small community organization devoted to peace and justice issues, the *Berea Interfaith Task Force for Peace*. One Common Ground activist describes his early introduction to the movement through this organization. "General interest came first," he said. "I belonged to a group, the 'Berea Interfaith Task Force for Peace'. A group where all like-minded ex-hippies met in the Union church every Saturday night. The task force held a peace vigil at the depot site every Saturday morning."

Included in their ranks is a formidable array of diverse talents and interests drawn from many social classes. Their membership includes: a former Vietnam veteran, a college professor, a nurse, several carpenters, two ex-priests, a community organizer, and an assortment of artists and musicians all committed to the conviction that the Army will not build a nerve-gas incinerator in Madison County. All share a strong sense of "community", a passion for this cause, and a belief that they will succeed. Both Concerned

Citizens and Common Ground's early efforts were directed at getting the Army to move the nerve gas out of Madison County to either a central facility (i.e. Tooele, Utah) or to a regional facility (Pine Bluff, Arkansas). Initially, transporting the weapons out of LBAD was the defining goal of both Concerned Citizens and Common Ground alike. This was the single issue around which both groups entirely agreed. However, at one point, Common Ground's rhetoric became more strident calling for a broader commitment to close down the Army's entire Chemical Weapons Destruction Program. This reflected an on-going debate within the group which involved deciding at what level to fight the Army's plan: whether to aim at closing down the whole program or whether to focus on their individual site. The latter won out. "We will shut down this program!!" gave way to, "There will be no nerve-gas incinerator in Madison County!"

In an effort to educate the community about the issue, Common Ground has sponsored petition drives, two rock concerts, and several public meetings. Steering Committee members have participated in radio and television talk shows, held public debates with Army personnel, and written letters to the editors of all the local papers. They have put a great deal of effort into coalition building with other like-minded anti-incineration groups, e.g. Greenpeace and the Citizens Clearinghouse for Hazardous Waste, to mention only a few, and they have served as advisors to opposition groups at other sites in their efforts to organize against the Army's plan. Although external organizations have been helpful, they were not the driving force behind the citizens' opposition movement in Kentucky, or elsewhere. As a spokesperson for Greenpeace once remarked when this controversy was in its early stages, "If Greenpeace disappeared, this opposition would not go away."

In 1990, Common Ground incorporated under a new name, "The Kentucky Environmental Foundation" or KEF, Inc. KEF was granted legal non-profit status (501c3) in 1991. KEF's stated purpose, according to Common Ground's newsletter, *Common Sense*, "is to disseminate information and educate the public on environmental issues." And, "since the most pressing environmental issue in Central Kentucky is the proposed nerve-gas incinerator, KEF has identified the nerve gas issue as its focus." Currently six people are serving on the KEF board, all from the Steering Committee of Common Ground. When asked why they didn't just incorporate Common Ground, a KEF spokesman replied that tax laws place restrictions on the activities of non-profit corporations, particularly in regard to political action. Thus, Common Ground could remain independent in its political and lobbying activities (*Common Sense* Newsletter, no date). KEF, Inc.'s executive director explained that their position regarding strategy was to take a tiered approach which included intensive lobbying efforts with federal and local officials, monitoring Congress and grass-roots activities. It was felt that working at the local level exclusively would not be sufficient to achieve the goals of the organization. Common Ground leadership agree *in principle* that some form of direct action may be required at some future time; however, they argue that at this point in time, it is not yet warranted. It is conceivable that Common Ground's incorporation as the Kentucky Environmental Foundation, Inc. will mitigate further their willingness to risk direct action.

3.7.3 Common Ground/Fayette County

This branch of Common Ground was started by a Lexington Realtor, twenty-year resident of the area, and member of the Berea Interfaith Task Force for Peace. He commented that it was particularly difficult mobilizing people in Fayette County, possibly because the media has portrayed the issue as a Madison County problem. Nevertheless, in response to requests from the leadership of Common Ground, with whom the respondent has maintained a long-standing friendship, the citizens of Fayette County were enlisted in the struggle against the Army. In speaking about how the group got off the ground, the leader replied,

> My first thought was, of course, getting the message out. So I went to groups, anywhere people gathered together---Kiwanis Clubs, Peace Groups, City Government, the Environment Commissions---anywhere. During the Gulf War even though it was not related, it <u>was</u> related.

In addition to these forays into public education on the issue, the group wrote articles, passed resolutions, helped advertise scoping meetings and, on occasion dealt with the media. One problem mentioned by the group's founder was the fact that "Everybody is spread pretty thin, keeping a life and job." Not many people are aware of the existence of this little group, but the existence of an Army opposition group in Fayette County is important because of the low visibility of this issue there and because of the multi-million dollar thoroughbred race horse industry which has refused to acknowledge that the incinerator problem could potentially affect them. This attitude has been aided by the media who repeatedly refer to the nerve-gas incinerator as the Madison County incinerator. In an unusual stance for a

Kentucky activist, this informant expressed the opinion that to argue to transport the weapons elsewhere was a narrow point of view.

3.7.4 "Other Voices" (People United for Environmental Justice)

The entity "Other Voices" took shape in 1991. It evolved out of Common Ground, in response to ideological differences with both Common Ground/KEF and Concerned Citizens. The founder of "Other Voices" felt that Common Ground was losing touch with the people and expressed frustration with both groups' "reactive" stance vis-a-vis the Army. Believing that a more frontal attack was called for, the founder mobilized like-minded women sympathetic to the goal of preventing the Army's planned incinerator complex in Madison County. In describing her feelings for forming the new group, the founder replied, "I am so damn sick of responding to the Army---why can't we *initiate* something!" There were other gender-related issues which contributed to the split, as did questions about power shifts away from Common Ground's earlier democratic practices. The initiator of "Other Voices" single-handedly embarked on an ambitious campaign attacking the Army's emergency preparedness plan, known as CSEPP (The Chemical Stockpile Emergency Preparedness Program).

A plan was formulated to place an advertisement in the local newspaper questioning the adequacy of the Army's emergency plan for the community. Calling the Army's emergency plan, "Grand Illusions," the article critiqued the Army's latest publicized emergency plan which had been recently disseminated to the public that summer in the form of a glitzy, high-gloss, scenic calendar. Several hundred individuals and organizations sponsored the advertisement which appeared in the local newspaper. (*Berea*

Citizen, August 14, 1992). At one point, the leadership of "Other Voices'' with the help of a few like-minded citizens, sponsored a demonstration at the depot site which was attended by the author and several members of Common Ground. "Other Voices'' also feel differently about the value of direct action. Whereas leaders of Concerned Citizens prefer "working in the trenches'' to accomplish their goals and view any type of direct action with derision---i.e., "showboating,'' leadership of "Other Voices'' sees non-violent direct action as "the right of the citizens to demonstrate their feelings on an issue.'' "Other Voices'' attempts to attack the myths surrounding the CSDP, and is deeply committed to the importance of drawing people into the struggle. And the movement is all the richer for their participation, for through their efforts to view the controversy from another perspective, they mitigate many of the Army's myths of all powerfulness. Perhaps it is this diversity that gives the movement at this site such vitality.

3.7.5 The Chemical Weapons Working Group (CWWG)

In November of 1991, Common Ground and Concerned Citizens sponsored the first International Meeting of Citizens opposed to the Army's incineration plan. In addition to representatives from all eight CONUS sites, the conference included delegates from the organized opposition against the Army's JACADS facility (Hawaiian Islands) as well as a representative from the former U.S.S.R. Greenpeace Action also sent representatives. The media was very much in evidence.. The purpose of the conference was to discuss strategy and share ideas. The meeting, held at the Richmond, KY Holiday Inn, lasted the entire weekend. The groups are linked together nationally as the *Chemical Weapons Working Group (CWWG),* communication is either

by telephone or via ECONET, an environmental electronic bulletin board. As a result of the conference, delegates developed an Accord which outlined the group's thinking about the task of disposing of chemical weapons. The following are a few of the recommendations contained in the document entitled, "The International Citizens' Accord on Chemical Weapons Disposal" (November 10, 1991):

> All use of incineration or plans to use incineration or any other open ended-as opposed to fully contained-disposal system for chemical weapons destruction should be halted at once;
>
> Defense Department should immediately expand its investigation into alternative technologies;
>
> The Army should commission site-specific studies at each chemical weapons site;
>
> There should be greater citizen involvement in all decision-making processes and international treaties and conventions;
>
> Environmentally unsound technologies for the demilitarization and disposal of chemical weapons must not be exported;
>
> In negotiating international chemical weapons agreements, the impact on people and communities must be a central concern;
>
> If, as a last resort, transportation of chemical weapons must be undertaken, it should be only for final treatment and/or disposal, after necessary stabilization, with the consent of affected communities, and be consistent with the above-stated goals.

The transportation issue caused some consternation, however, because transportation out of LBAD had been the cornerstone of the citizen's opposition movement in Madison County, KY. However, this last accord

demonstrates the utility of the conference as this issue was hammered out and dissected for many hours. Eventually, the conference arrived at a compromise position, which was acceptable to most participants.

The foregoing account of the conference is not intended to be a comprehensive account of the events of that week-end. The conference was a learning experience and a valuable opportunity to share concerns, offer support and create feelings of empowerment. It was an exercise in *counter hegemony*. In the end, "Not in My Backyard" evolved into "Not in Anyone's Back Yard" (Silton 1993). Since then, other similar conferences have taken place.

3.8 The evolution of Issues and Non-Issues

Several issues have evolved as "key" in the minds of citizens who oppose the Army's plan to incinerate nerve-gas weapons at the LBAD. Among them are the following: (1) programmatic vs. site-specific studies; (2) public safety; (3) chronic effects of low level exposure to by-products of incineration; (4) continued use of the incinerators; (5) transportation of the stockpile out of LBAD; (6) alternative technologies.

3.8.1 Programmatic vs. Site Specific Approach

Issues evolved as time went by and it is fair to say that a central "core" of issues has remained throughout the history of the struggle. Foremost among these (although there really isn't a "first") is the Army's decision to use a generic approach to conducting the risk assessment associated with the disposal plan. This is referred to as a "programmatic" approach. Basically, the Army decided to lump together all eight sites for the purposes of developing a

risk assessment. The "issue" here is that citizens wanted the Army to conduct site-specific studies, i.e, studies that would take into account the unique features of each site, such as population density, topography, etc. before building an incinerator at that site. The final report of the Kentucky Community Review Support Contract, (the Army-funded community study group in Richmond, KY) discussed this issue. The report states:

> Making a PROGRAMMATIC (generic) decision with limited site-specific information means that many of the deep and troubled concerns of this area get "defined out." People are site specific and safety is site specific. Shouldn't a PROGRAM be designed with those in mind? (Blackwell et al, Kentucky Community Review Support Contract, November 1987, p. 19)

The evolution of this issue (i.e., the SSEIS) is a story in its own right and will be examined more fully in Chapter four in the context of the NEPA process.

3.8.2 Public Safety

"Safety first, and by the way, no incinerator too," wrote Travis Flora in an article dealing with the citizen opposition to incineration at LBAD (*Berea Citizen*, October 14, 1993). Concern over public safety is at the height of citizen concerns about the CSDP. One person asked, "Do those who make decisions then live with the possible consequences or does extensive bureaucracy mean that some decide and others endure?" (Blackwell 1987, Kentucky Community Review Support Contract, p. 19). Another Concerned Citizen commented that

> health and safety should be given primacy over every other factor--'way ahead of whatever is in second place.' This primacy must pervade the

> choice of alternatives, the planning to follow, and the implementation of the plan. It must be operational, not just rhetorical! (Blackwell 1987, Kentucky Community Review Support Contract, p. 19).

3.8.3 Chronic Effects: The Anatomy of a Non-Issue

The Army has focused on catastrophic accidents in preparing its emergency preparedness plans for the communities who host the stockpile, but has ignored completely the chronic effects to the communities from low level exposure to the by-products of incineration. The main point of contention is whether small but lethal amounts of nerve agent and toxics like dioxin would escape from the incinerator into the atmosphere. A spokesman for Greenpeace Toxics Campaign flatly charges that "the dioxin issue has been suppressed'' (Personal Communication 7/30/91). The Army says that federal regulations allow a tiny amount of nerve gas to be released into the atmosphere---52 parts per trillion. "That's equivalent to destroying 99.9999 percent of the nerve gas and letting the rest escape to be dispersed by wind'' (*The Birmingham News*, Sunday, May 31, 1992, p. C 5). Indeed, the Army brags about the fact that the incinerators will destroy agent to the level of "six nines''; however, knowledgeable experts admit that even under the most ideal circumstances, this level of efficiency is difficult to achieve. And considering that these incinerators will be operating twenty-four hours a day, seven days a week for at least a year---longer in some cases, it stretches credulity to believe that the Army will be able to maintain that standard. The Army says it can't measure amounts smaller than 52 parts per trillion and assures skeptics that they have never monitored nerve gas coming out of their stacks.

In fact, the Army has completely foreclosed even any discussion of "incineration" per se, except to defend it as the "safest" and "most efficient" method for destroying nerve agent. This "decision by fiat" is typical of how the issue (which has, of course, become a "non-issue") has been handled. Nowhere in any of the CSEPP (Chemical Stockpile Emergency Preparedness Program) documents is there *any* mention of the dangers of incineration. Indeed, the Army has routinely dismissed the community's expressed fears regarding stack emissions by simply repeating the phrase, "The Army will comply with all applicable environmental laws and regulations."

3.8.4 Future Use of Incinerators

"If you build it, it will stay," so predicted Ben Haskell, one of the organizers of an opposition group at the Anniston Army Depot (*New York Times*, Thursday, September 24, 1992, p. A-16). His wry remark sums up the feelings expressed by most citizens who oppose the Army's nerve gas incinerator plans.

Although Public Law 99-145, the "Department of Defense Authorization Act of 1986," mandates that the incinerators be razed once the stockpile is destroyed, few believe they will be destroyed. PL 99-145 stipulates that "Facilities constructed to carry out this section may not be used for any purpose other than the destruction of lethal chemical weapons and munitions, and when no longer needed to carry out this function, such facilities shall be cleaned, dismantled, and disposed of in accordance with applicable laws and regulations" (PL-99-145, November 8, 1985: Section 1412, p. 99 STAT. 747). The Acting Assistant Secretary of the Army assured the author that they would be destroyed "Pac-Man style" (Personal

Communication: Acting Assistant Secretarty of the Army for Installations, Logistics and Environment to author, July 29, 1991).

However, laws can be changed and many doubt that a multimillion dollar facility with state-of-the-art technology will be scrapped. The incinerator complex at LBAD alone is estimated to cost half a billion dollars (*Richmond Register*, May 30, 1991, p. 2)! In fact, in the words of a member of Concerned Citizens, "Future use is a foregone conclusion.'' Voicing concerns about the escalating costs of the program, Congress commissioned studies on the feasibility of the continued use of the incinerators. The MITRE report issued in January of 1991 entitled, "Engineering Analysis for Future Use of Chemical Agent Demilitarization Plants: Feasibility and Desirability,'' suggests several uses for the future of these facilities, thus adding fuel to the fire on this issue (MITRE Report 1991). A brief quote from that report (which one activist subtitled, "How to Circumvent the Law with regard to the Future Use of Facilities,'' presents a chilling specter {*from the community's perspective, of course* } of what may come to pass. The following are some possible alternative uses for the facility at Umatilla Depot Activity (UMDA) in Oregon as outlined in the MITRE report:

> It has also been suggested that the chemical demilitarization plant be made available for commercial hazardous waste disposal after its mission is completed. The Hermiston Development Corporation is particularly interested in exploring the possibility of having the facility turned over to the private sector for this purpose (Personal Communication). There is a market for such services in the area. . .Another possible use would be to maintain the facility intact and under Army control for use in the disposal of military hazardous waste. . (MITRE Report 1991, p. B-81)

Management alternatives for future use include: (a) Government Ownership and Operation; (b) Government Ownership and Contractor Operation; (c) Transfer to Nongovernment Ownership and Operation (MITRE report 1991, p. 6-12, 6-13). Ironically, the latter is the alternative citizens fear most. In discussing the possible transfer of the incinerators to non-government ownership, the report states that, "This option is best suited to cases where the demilitarization plant is located at an installation scheduled for realignment (PUDA, UMDA and the Bluegrass Activity of LBAD) and for which the government has not identified a feasible or desirable future use'' (MITRE Report 1991, pp. 6-12;6-13).

Two laws however, affect the demilitarization plant future use options: Public Law 98-407 and its corresponding Army regulation (AR 200-1, 1-35 [a] [6]), prohibit the use of any DOD facility for the storage or disposal of any non-DOD toxic or hazardous wastes (MITRE 1991). Beyond Public Law 98-407, RCRA has the largest potential to affect the demilitarization plant future uses. The MITRE Report states that "RCRA's comprehensive and prescriptive body of regulations introduce uncertainty and complexity in determining the regulatory desirability of any future use'' (MITRE report 1991, p. 6-10).

Congress recently commissioned the MITRE Corp. to conduct another "Future Uses'' study. This latest assessment is scheduled for delivery to Congress in FY (fiscal year) 1994 (U.S. Army Materials Destruction Agency: Annual Status Report on the Disposal of Lethal Chemical Weapons and Material, Department of the Army, December 15, 1993).

3.8.5 Transportation

"FLY IT OUT," was the conclusion of the independent citizens' review committee set up to study the problem of the disposition of the chemical weapons at LBAD. The cornerstone of the opposition efforts, the *raison d'etre* of both Concerned Citizens of Madison County and Common Ground/KEF was the transportation alternative. They forcefully advocated transporting the stockpiled weapons out of LBAD to either a national or a regional site, citing the Army's excellent record in transportation of chemical weapons. The groups point out that there has never been a fatality involving the transportation of nerve agent and cite the Army's considerable experience in this area (See *Chemical Stockpile Disposal Program: Chemical Weapons Movement History Compilation.* June 12, 1987). Opposition groups at LBAD are quick to point out the Army's unmitigated success in transporting the U.S. stockpiles of chemical weapons from the Federal Republic of Germany to the facility on Johnston Atoll. Citizens at LBAD cry out for "equal treatment with the Germans." (For a fuller description of this effort, see article: "Removal of U.S. Stocks from Germany Sparks Debate," August 13, 1990, *Chemical and Engineering News*, pp. 10,11).

Indeed, the Army did conduct transportation studies early on, although these studies only involved the movement of the M55 rockets. The Army's Chemical Stockpile Disposal Concept Plan (1986) did discuss several transportation options and concluded that airlift using C141B aircraft would be a possibility for supplying regional plants, "although the potential benefit of using higher-capacity aircraft requires additional study" (U. S. Army CSDP Concept Plan 1986, p. B-23). This study concluded that munition trains would be the best mode of transport. The FPEIS did include expanded studies on Air

Transportation and on the partial-relocation option. The FPEIS states that "The partial relocation alternative would require from 900 to 1200 flights for shipment of the APG inventory and from 1200 to 1500 flights for shipment of the LBAD inventory" (FPEIS 1988, p. xiii). In each case, the destruction technology would remain the same as that employed on Johnston Atoll (JACADS), i.e., incineration in separate furnaces for each of the several components of the weapons, e.g., agent destruction, explosive and propellents, metal decontamination, and dunnage disposal. Under the section titled, "Key Findings," the FPEIS reads, "Continued storage, national, and partial relocation alternatives are rejected from further consideration based on the methodology's first stage of human health impacts. Basically, the comparisons are made first, for human health impacts and then for ecosystem and environmental impacts" (FPEIS 1988, p. xvii). On this basis, the "environmentally preferred" alternative is selected. In this case, the Army's calculus showed on-site incineration to be preferable to transportation.

Initially, "the Army determined that the costs of the transportation and on-site incineration options were comparable" (*Richmond Register*, May 30, 1991, p. 1). However, one of the founders of Common Ground/KEF argued that "based on information he has reviewed, the cost of transportation would be about a fourth of the cost of on-site disposal" (*Richmond Register*, May 30, 1991, p. 2). However, cost was not the only variable considered in the Army's decision to go with on-site destruction over transportation. When word of this possibility reached people in states adjacent to the transportation route, numerous negative messages came from political figures decrying the Army's intent to move weapons through their territories. The Army, bowing to this

pressure, decided against transporting the stockpiled weapons. The Army insists that "Cost has never been the driving factor in this program" (*Richmond Register*, May 30, 1991, p.2). However, there is evidence to support the contention that, initially, incineration was selected because it was thought to be the most efficient and cost-effective method for destroying the weapons. In a document obtained form the Defense Technical Information Center (DTIC) [A data base not available to the general public, but only to Army contractors and subcontractors], Army personnel clearly indicate that cost was indeed a big factor in the selection of incineration. In speaking about the "baseline technology" i.e., *incineration*, the Army said, "The life-cycle costs will ultimately determine the demilitarization system configuration" (Lurk 1984).

3.8.6 Alternative Technologies

Up until 1992, when Congress mandated that the Army consider alternatives to on-site incineration, the Army had simply dismissed the issue of alternative technologies out of hand (Incineration Alternatives Act of 1992). The issue was "defined out," and any and all discussion of *alternatives* focused on *where* the destruction by incineration was to take place. Questions about *whether* incineration was the best choice were not on the agenda by the time the citizens were brought into the process. The FPEIS (1988, Section J.1.2.1 *The Disposal Alternatives*) lays out the "alternatives" considered by the Army, they were: On-site disposal, Regional Disposal or a Central or National Disposal Center. Under the regional alternative, munitions stored in the eastern region of the country would be shipped by rail to Anniston Army Depot, Alabama, while those in the west would be

shipped to Tooele Army Depot, Utah. Under the national (or central facility) alternative, all munitions in the continental U.S. would be shipped by rail to Tooele Army Depot for destruction (FPEIS January 1988). A "no-action" alternative was also considered and the report stated that "the major risk elements {relevant to continued storage} are relatively rare, external or natural catastrophic events, such as tornadoes and aircraft crashes. Storage-related accidents are typically very low in their probability" (FPEIS 1988, p. J-4). In speaking about the risk of continued storage, one of the co-founders of Concerned Citizens reported that the Army had conducted a study of the state of the stockpile at LBAD. She said, "The Army refers to 'deteriorating' or 'aging stockpile'. Our stockpile has the safest, lowest rate of leakage. There is some pitting. We at LBAD had the least amount of pitting. The Army looked at propellant; they were most concerned because over time the stabilizer evaporates, but what they said was that in another 25 years, all that stuff would have to be given another hard look because of the stabilizing stuff. They set up a system for examining the stockpile on a routine basis." Yet in other documents, the Army states that continued storage is the alternative with the highest risk. This seeming contradiction is due to the fact that the risk assessment was done on a programmatic (generic) basis, and not on a site-specific basis. The "programmatic" risk analysis identified the "continued storage" alternative as the one with the highest risk. However, this is not the case at LBAD.

Citizens repeatedly have criticized the Army for failure to consider alternative technologies, only to be told that other methods had been tried (for example, the neutralization method used at Rocky Mountain Arsenal discussed earlier) and found wanting. The Army quickly dismissed other

methods, e.g., those suggested by Greenpeace as "Blue Sky" technologies, meaning untried, unproven (See Picardi 1991, *Alternative Technologies for the Detoxification of Chemical Weapons: An Information Document* prepared for Greenpeace International). The one aspect of all these alternatives that remains key is the "closed loop" concept. This means that nowhere in the process is there an outpouring of emissions or waste products into the environment. Several methods have been suggested as alternatives to incineration. They include:

- Biological Methods- where microorganisms are used to break down organic chemicals by using them as nutrients

- Neutralization- a variety of chemical reactions designed to de-activate the chemical agents

- Plasma Arc- A fully contained thermal process that insures complete destruction of organic chemicals.

- Supercritical Water Oxidation- utilizes temperatures and pressures of water above the critical point of water, in a closed system, for hazardous waste treatment.

- Photochemical Degredation- exposure to UV radiation as a method of breakdown of CW agents.

- Electrochemical Oxidation- electric current passed through a solution of silver nitrate, the water molecules form highly reactive hydroxyl radicals which can oxidize substances.

- Steam Detoxification- Steam reforming chemistry.

(*Source*: Kentucky Environmental Foundation, Inc. Prepared Statement, Executive Director, to Environment, Energy, and Natural Resources Subcommittee of the Committee on Government Operations, June 16, 1992.)

The Army's intransigence regarding the issue of alternative technologies has been noted by several authors. For example, in reviewing the Army's Global Commons Environmental Assessment (EA) in which the Army recommended using incineration at the Johnston Atoll facility, Hardy (1990) argued that:

> The Army's failure (in the SSEIS, the global commons EA, and in Germany) to even consider alternative disposal methods is unreasonable. Incineration is not the only means by which chemical weapons can be disposed of. Recently, new methods using biology and new kinds of organic chemistry have been utilized to break down chemicals such as those stored in the European stockpile. (Hardy 1990, p. 7)

He suggested that these alternatives (which embody the "closed loop'' concept) could be used in two ways. "First,'' he wrote, "they could be used for on-site destruction of the chemical agents. Second, they could be used to reduce the nerve agents' toxicity--by thousands of times--before shipping them over seas to their final disposal area'' {or to a central or regional facility as in the case of the CONUS stockpile} (Hardy 1990, p. 7).

In 1992, Senator Wendell H. Ford asked the Office of Technology Assessment to conduct a study into alternative technologies for the detoxification of chemical weapons. The OTA reported that present work with alternative technologies is focused on treatment of hazardous wastes other than chemical weapons and suggested that market forces alone could not be expected to lead the development of alternative CW destruction technologies because the U.S. stockpile of chemical weapons is small compared to industrial chemical waste. "If an alternative is to be developed,''

writes OTA, "government will have to be depended on for at lease some of the support'' (Office of Technology Assessment (OTA) 1992, p.9).

On February 7, 1994, the National Research Council, the operating agency of the National Academy of Sciences and the National Academy of Engineering, released its long-awaited report from the Committee on Alternative Chemical Demilitarization Technologies (NAS 1994). The report is a 200-page document which took one and one-half years to develop. It is available to the public through the National Academy Press for $40.00. Members of the Citizens Advisory Commission (CAC) appointed to evaluate the report, had only two weeks to formulate a response. Those who have had an opportunity to review the report are disappointed claiming that "they {the NAS} focused on validating incineration'' (Personal Communication: Co-founder Concerned Citizens of Madison County to CGD: 2/13/94).

Activists from other sites also got the impression that the Army wasn't seriously considering alternative technologies. Persons in attendance at a Public Meeting in Anniston, Alabama in the summer of 1993 came away with the impression that alternatives weren't being seriously considered. In recording her impressions of the meeting, one researcher wrote, "This sense that the Army is not really considering alternative technologies but rather is trying to bolster their decision to incinerate was evident throughout the evening'' (Field Notes: Cathy Solheim 1993: U.S. Army Public Meeting on the CSDP, Anniston, Alabama). Finally, with respect to the issue of alternative technologies, Lenny Seigel (1992) from the National Toxics Campaign made this observation:

> Three issues stand out. First, the continuation of the present program is automatic once the Army submits its reports. The problem is that the Army

> would consider any change in technology to be an admission of error. Thus, it has a bureaucratic imperative to recommend against alternatives (Letter: Lenny Seigel, Pacific Studies Center to Executive Director, KEF, Inc., August 27, 1992).

The National Academy of Sciences (NAS) committee studying alternative technologies works under the Board of Army Science and Technology which is chaired by John Longwell (MIT) and Gene Dyer (Bechtel); thus, the outcome of the Alternative Technologies study can hardly be surprising in light of the fact that Bechtel National, Inc. is one of the prime contractors for the CSDP. The U.S. Army awarded Bechtel a $240-million dollar, nine-year contract in 1988 to dispose of the chemical weapons stored at LBAD and the seven other sites around the country (*Berea Citizen*, December 1, 1988).

The latest development in the quest to find an alternative to incineration, and perhaps the answer to the opposition movement's prayers, comes from a small company in Rockwell, Texas---Aquron Corp. Aquron has developed a brand-new "alternative'' to incineration for the destruction of chemical weapons and they have presented their findings to the Army (*The Berea Citizen*, September 16, 1993). Apparently, this new technology is a neutralization process. The president of Aquron said in an interview, "We can build a mobile unit. The whole thing could be mounted on an 18-wheel trailer and hauled around from site to site,'' thus reducing the need for the construction of permanent facilities. "The process involves a four-stage process. We are prepared to neutralize the whole stockpile for 3% to 5% of the current incineration program. Plus, we can neutralize the whole stockpile in a year and be gone. . .We can neutralize the whole stockpile for

the cost of two sites,'' says the President of Aquron. (Telephone Interview 9/20/93).

Obviously, if what he says is so, it would have profound implications for the Army's current CSDP which is built around on-site incineration. However, Aquron faces difficult hurdles in its quest to get the Army to pay attention to this new process, not the least of which is the fact that they cannot get live agent to demonstrate the efficacy of the process. Thus far, they have worked their process only on small quantities available through the local university. However, this informant said that the Army was planning to provide them with the means to conduct some demonstration tests before Army personnel involved with the CSDP.

3.8.7 Decontamination: The "Other'' Non-Issue

The idea of decontamination has not even emerged as an issue by the great majority of citizens who oppose the CSDP. Even the most highly-informed proactive of the citizens are likely unaware of the possibility of such a need. The Army has assiduously avoided any mention of decontamination in public education materials and the Army keeps a tight lid on what information does reach state emergency managers, much less the general public. Despite the Army's claim that there is a low probability of any significant off-post contamination, decontamination procedures are being studied at length (Munro et al 1991; U.S. Dept. of Health 1990; Watson and Munro 1990; Watson et al 1991). Much of the Army's thinking on the subject comes from researchers at the national laboratories, e.g., The Oak Ridge National Laboratory, TN.

A good deal of research on decontamination for the CSDP remains hidden away in some of those obscure government planning documents that remain at the DRAFT level so that they cannot be released for public review. The concern for continued study of decontamination is driven by the fact that "Neither safe levels of residual contamination, acceptable monitoring methods, nor acceptable and effective decontamination methods have yet been promulgated for the general population'' (Shumpert and Watson 1991, p. 3-4). Bear in mind that what little is known about nerve-gas contamination is derived from data obtained from military training manuals which based their conclusions on projections of what would happen to healthy, adult males under battlefield conditions, and studies with agent simulents under controlled laboratory conditions. In the "unlikely'' event of an off-post release (i.e., an accident where a plume of nerve or mustard agent traveled beyond the Army depot into a nearby community), little is known about what could be done to prevent contamination of waterways, foliage, pets, foodstuffs, houses, etc. In some cases, people may not be able to reenter their homes for weeks---possibly months. Although such an accident is unthinkable, the Army admits there is a small probability that it could happen.

3.9 Depth and Breadth of Community Support

From its earliest beginnings in 1984, support for the movement to oppose the Army's incineration plan at the LBAD site was broad-based and substantial. Where people at many sites were only dimly aware of the CSDP until fairly recently, a random telephone poll of 100 Madison County residents conducted in 1984 showed 77 percent (77%) of those polled would

not favor an incinerator at the depot or in the county. Only fifteen percent (15%) would support building the facility; eight percent (8%) were undecided (*Richmond Register*, August 27, 1984).

As a result of the collaboration of the two complementary groups, the movement quickly moved from "reactive" to "proactive" and in the process, garnered enormous community support. What happened in Madison County is similar to McAdam's (1982) account of groups in the Civil Right's Movement of the 1960. He wrote, "By confining their attacks to targets that were narrowly defined, both substantively and geographically, movement groups were able to concentrate their forces so as to offset the basic resource discrepancy between themselves and their opponents. The result was a narrowly circumscribed, highly focused, effective insurgent campaign" (McAdam 1982, p. 151).

The list of political persons and organizations in support of the citizens' opposition to the Army's on-site incineration plans for Madison County, Kentucky includes officials in local, county and state government. The following government officials came out in support of the citizens' opposition and against the Army's plan: U. S. Representative Larry J. Hopkins; Senator Wendell Ford; Senator Mitch McConnell; Senator Walter "Dee" Huddleston (1984); Governor Martha Layne Collins; and Lieutenant Governor, Steven Beshear. In a letter (July 22, 1986) to Chairman Nichols, Congressman Hopkins and Members of the House Armed Services Committee, Senator Ford stated his objections most vigorously. He wrote, "Let me offer a few words in perspective. . .The materials were brought here without consent of and without consultation with the people. I think it is

high time that the Army listen to them.'' Senator Ford's sentiments are typical of those expressed by other political figures.

Community organizations opposing the Army's plan include: The Richmond City Board of Commissioners (Resolution No. 84-13); Health Help, Inc.; The Madison County Fiscal Court (Resolution, May 7, 1984); The Richmond Chamber of Commerce; Kenvirons, Incorporated; The Kentucky Resources Council; Lexington-Fayette Urban County Council (May 16, 1985, Resolution); the Faculty Senate of Eastern Kentucky University; the Faculty and corporate officers of Berea College; The Kentucky Fair Tax Coalition, and Local Lodge 859 of the International Association of Machinists and Aerospace Workers AFL-CIO. National organizations supporting the opposition include: The Sierra Club (Cumberland Chapter); Greenpeace Action; The National Toxics Campaign, Citizens' Clearing House for Hazardous Waste, and the Highlander Center. At one point, a petition carrying 172 signatures of Madison County teens and pre-teens opposing incineration of the weapons at LBAD was delivered to Congressman Hopkins.

However, one organization, The Madison County Grand Jury supported the Army's plan to build a nerve-gas incinerator in Madison County. In an article which appeared in the *Richmond Register* (December 19, 1984), the Grand Jury cited the reported deterioration of the rockets as a reason for its recommendation.

3.10 Community Review Studies: The Co-optation of Citizen Protest

As a result of the hue and cry that went out from the citizens of Madison County, two community study groups were eventually formed there to study the nerve gas issue: (1) the Madison County Task Force on Chemical Weapons, appointed by U. S. Congressman Larry J. Hopkins (ranking Republican on the Investigations Subcommittee of the House Armed Services Committee) in June of 1984, and (2) the Kentucky Community Review/Study Group (1987)---the latter study was supported by Army funds.

In this section we will briefly describe the origin of these independent community study teams, describe their funding, and discuss some of their conclusions as well as the Army's response to their findings. As we review these studies, the length of time they took, their economic cost and learn about what the Army finally did with their conclusions, it is useful to recall Gaventa's observation that "increased participation it is assumed, will not meet power constraints'' (Gaventa 1980, p. 8).

3.10.1 The Madison County Task Force on Chemical Weapons

U. S. Congressman Larry J. Hopkins, ranking member of the House Armed Services Committee called into being the Madison County Task Force. Rep. Hopkins appointed a fifteen member team, broadly representative of Madison Countians to study the nerve gas issue. The study took approximately a year and a half to complete (June 1984-May 1986). Meetings were held twice a month and were open to the public. Several members of the Task Force traveled (at Army expense) to the Army's prototype facility in Tooele, Utah, CAMDS (Chemical Agent Munitions Destruction System)

which is a one-third size prototype of the incinerator planned for LBAD. In describing the group's work, one Task Force member talked about his experience:

> The Army sent us copies of all the documents we requested. They never held back. I never had the feeling that anything was withheld. We attended some contractors meetings. When our schedule permitted, two of us would go. I attended two in Aberdeen Proving Ground (APG), one in Tooele Army Depot (TEAD), and one at the Oak Ridge National Lab. We had enough money for travel. We asked questions at the sites. I respected the openness of the Army. Our input was received courteously. Of course, one never knows whether it was received courteously and then dismissed.

While most members of the Task Force remained somewhat skeptical of the Army's plan (and its motives!), some members were duly impressed by the Army. As one task force member (President of the Richmond Chamber of Commerce) stated, "I was impressed by the Army's marshalling of their forces. . .I haven't made up my mind (on incineration) yet" (*Courier Journal*, , July 11, 1984, p. 1).

After nearly two years of study, the Task Force made the following recommendation:

> We have by majority vote concluded that building an incinerator in Madison County for the disposal of chemical weapons would be wrong and that transportation to a Regional site (Anniston) or National site (Tooele) by train is the best local and also national solution to the problem. It also is the most ethical and moral solution to a miserable situation anyway one looks at it. (Statement -On Chemical Weapon Disposal: Dr. Oris Blackwell, Speaking for the Madison County Task Force, May 21, 1986).

According to Task Force Members, the Army never directly responded to their conclusions, although their findings are summarized in Volume 3 of the FPEIS (U. S. Department of the Army, Chemical Stockpile Disposal Program: Final Programmatic Environmental Impact Statement, 1988, Vol. 1,2,&3).

3.10.1.1 The Trip to Tooele

Periodically the Army has flown citizen groups to Tooele, Utah, to tour their prototype facility---the Chemical Agent Munitions Disposal System known as CAMDS In August of 1984, the Army flew twenty-seven Kentuckians---including nine members of the Madison County (Citizens') Task Force on Chemical Weapons, and an assortment of community leaders to the Tooele site for an intensive workshop and tour. The trip was set up in order that Kentuckians could gage the the facility's safety first hand, according to various news reports. According to Brigadier General Bobby Charles Robinson, who led the tour, the reaction to the trip was "so encouraging.'' He said, "the Army was glad to pick up the tab because it wanted the public to be 'totally informed of the issues' surrounding the military's efforts to get rid of the obsolete rockets. . .'' (*Lexington-Herald Leader*, August 19, 1984, p. A-18).

The *Courier Journal* reported on the trip as follows: "A largely skeptical group of Kentuckians received a red-carpet welcome in Utah yesterday from Army officials who want to build a nerve-gas incinerator in Madison County'' (*Courier Journal*, August 16, 1984, p. 3). In addition to the nine members of the Citizens' Task Force were deans and professors from both Eastern Kentucky University and the University of Kentucky, administrators from Pattie A. Clay and Berea Hospitals, state environmental

officials (*Courier Journal*, August 16, 1984, p. 3). Participants were housed at the Hilton Hotel in Salt Lake City and, prior to their tour of the facility, were invited to attend a Discussion Workshop in which they were introduced to some of the principal technological concepts, processes and personnel involved in the CSDP. One newspaper reporter wrote, "They are receiving free air fare, meals, lodging, and elaborate briefings in a cavernous hall at the Salt Lake City Hilton Hotel'' (*Courier Journal*, August 16, 1984, p. 3). The article continued, "Officials of the Army Material Command, which is footing the bill, said yesterday they did not know how much the trip will cost.''

Since this particular contingent was made up of citizens from among the most vocal opposition, every attempt was made to accommodate their questions and concerns. The Army reassured them that the final decision on the destruction technology had not yet been made and that their visiting this site at Army expense was completely consistent with NEPA. At one point in the discussion workshop, General Bobby Robinson, in an attempt to reassure the skeptics, said, "You see, the community and the state officials and the Army are *partners* in whatever decision is made. And, indeed, we will be *partners* in whatever decision is made, not only at Lexington Bluegrass, but also at other installations where several items are being stored. They will have to be disposed of in some manner'' (Transcript: Tooele Army Depot CAMDS Overview and Discussion Workshop, August 15, 1984, Salt Lake City, Utah, p. 117).

The Army arranged for several such trips over a period of years. Citizen activists from other communities have been invited and various government and community leaders, both local and national, have toured the facility, including a delegation from the former Soviet Union. All

visitors to the site upon arrival were supplied with gas masks along with atropine kits.

On one such trip in 1985, an alarm went off indicating the presence of agent in the plant's ventilation system. At that time, 40 visitors from Kentucky and four other states were touring the facility. All were quickly evacuated. The story was picked up by the Associated Press and was carried in the local newspaper, the *Richmond Register.* The headline read: TOOELE ARMY DEPOT, Utah, (AP) "NERVE GAS LEAK PROMPTS EVACUATION OF VISITORS" The story began, "Community leaders from five states, getting a first-hand look at a prototype plant for destroying nerve gas weapons, were evacuated when alarms warned of a nerve agent leak" (*Richmond Register*, Wednesday, May 15, 1985, p.1). Fortunately, none of those present were injured.

The Army immediately turned the event into a publicity coup. They claimed that the incident proved they could handle any such eventuality. A number of citizens who were present during the tour voiced their approval of the Army's handling of the situation, which turned into positive feelings regarding the nerve-gas incinerator in general. One said, "I'm personally convinced that on-site destruction is the best method" (*Richmond Register*, May 14, 1985, p. 1). Brad Park, then director of the Richmond Chamber of Commerce said, "I was very impressed with the seriousness and professionalism of the people out there...The system goes off when there's just the tiniest bit of agent in the air, even if it is not enough agent to kill a flea," he said (*Richmond Register*, May 14, 1985, p. 1). But others were not impressed. A local political elite commented, "It's obvious they haven't got the bugs worked out yet.." An activist stated that the incident was "the most

dramatic possible demonstration of our concerns about this highly experimental incinerator;". . .then he added, "This is exactly the same process they want to put right here in an area where 17,000 of our young people go to school within four miles of where they would put the smokestack of a nerve-gas incinerator" (*Richmond Register*, May 14, 1985, p. 1).

Upon returning from that trip, several members were interviewed by the press and asked to discuss their impressions. *The Messinger Inquirer* (Friday, Sept.20, 1985) ran a story which read,"TOUR DOESN'T SWAY GROUPS OPPOSITION TO INCINERATOR." And, indeed, at least one member of the Task Force continued to express misgivings about the plan. He said, "Having visited the plant in Tooele, I can say this is an experimental process. . .This is a bad site. It is a bad decision" (Testimony: Discussion Workshop, Salt Lake City, Utah, August 15, 1984, p. 210). Several other members of Concerned Citizens remained very skeptical despite trips to the Tooele facility.

But not everyone remained skeptical. It is safe to say that a number of people were influenced positively by what they saw at Tooele. For one, Umatilla Mayor Don Armstrong said, "I'm personally convinced that on-site destruction is the best method. I'd really like to see the project proceed as expeditiously as possible" (*Richmond Register*, May 14, 1985, p. 1). The minutes of the Task Force meeting held on August 28, 1984 (after the Tooele trip) record one Task Force member saying that he was "quite impressed with the technology at Tooele. He was impressed with machines that measure in parts per trillion, and the personnel were very thorough in explanations of their areas, always willing to answer any questions asked by the group" (Minutes: Madison County Task Force on Chemical Weapons, August 22,

1984, p. 4). However, a year later, this individual's position hardened somewhat against the idea of incineration. He was quoted in the newspaper as having said, "For the people of Tooele, it is comforting that the alarms go off at a level of reasonable safety but it is small comfort to people contemplating the possibility of a similar installation in a populous area like central Kentucky (*Richmond Register*, May 15, 1985, p. 1).

Another member of the Task Force, Judge Botner was also favorably impressed with the Army's Tooele Facility. At the Public Meeting held by the Task Force to discuss their trip, he contrasted the attitude of personnel in Utah with those in Richmond. According to the record, he stated that, "Everyone he talked with locally at Salt Lake City seemed to trust the Army and all seemed to work together. He felt that some of our citizens had lost their trust here in Richmond and Madison County'' (Memo: Announcement of Task Force meeting in Richmond, Kentucky, August 28, 1984, p. 3). These statements, along with those from representatives from other sites, leave no doubt about the efficacy of efforts at co-optation.

3.10.2 Kentucky Community Review/Study Team

The idea for an independent citizens' study of the CSDP grew out of a public hearing on the Draft Programmatic Environmental Impact Statement (DPEIS) which was held in August of 1986. At that meeting, a member of Congressman Hopkin's Task Force posed a question to the Undersecretary of the Army who was present at the meeting. She asked, "Why can't there be a local independent study-review group funded by the Army to make the communities' concerns, interests, and suggestions known to the Army teams, contractors, and sub-contractors in a timely fashion for possible inclusion in

the Final Programmatic Environmental Impact Statement?'' (The question is paraphrased and the person who posed it also mentioned a dollar amount---$100,000) (Final Report: Kentucky Community Review Support Contract, 1987, p. 3).

Undersecretary Ambrose agreed immediately to fund such studies saying he "thought it was a good idea and that it should be possible'' (Blackwell 1987, p. 3). The group was to be a technical Peer Review Team under the direction of an expert in the area of environmental health and would be composed of primary reviewers in the area of chemical demilitarization, risk assessment, meteorology, and other technical personnel on an as-needs basis. In the letter, it was suggested that this study be conducted "concurrently with the development of the Programmatic Environmental Impact Statement (EIS) and the Site-Specific Impact Statement.''

Subsequently, on January 23, 1987, the Army's first community study contract totalling $116,000.32, was awarded to Eastern Kentucky University for the purpose of establishing a citizens' study group that would provide independent and objective public input into the problem of disposal at the local level (Final Report: Kentucky Community Review Support Contract, 1987). Dr. Oris Blackwell, Professor and Chair of Eastern Kentucky University's Department of Environmental and Health Science, was asked to chair the study. Five people served on the study team. The contract was entitled, "Kentucky Community Review Support Contract''. Members traveled to Tooele, UT, to Oak Ridge National Laboratory to meet with people preparing Environmental Impact Statements, and to other sites. One member recalls, "We had enough expense money to cover travel. We were

sent notices of meetings. When our schedules permitted, one or two of us would try to go. . . We asked questions at the sites. I respected the openness of the Army. Our input was received courteously.'' Team members also met with contractors. A member recalls, "EKU gave us a place to meet and places to store files...Dr. Blackwell was the number one person---the boss. He carried enormous clout.''

After ten-months of intensive study, the Community Review Team issued its report. The report concluded, "The overall conclusion of the Study Team is that the 1.6% of the U. S. Chemical Weapons stockpile currently stored at Lexington-Bluegrass Army Depot should be airlifted to Tooele, CAMDS facility for destruction'' (Final Report: Kentucky Community Review Support Contract 1987 p. 3). Upon release of the report, Dr. Oris Blackwell, principal investigator, expressed optimism that the Army would be receptive to the citizens' concerns. He told a reporter, "The Army has been listening very carefully,'' and later he added, "They have both encouraged and allowed us to feel a part in the problem solving process. Our opinions have been sought and listened to'' (*Berea Citizen*, November 25, 1987, p. 1).

Following completion of this community study effort, a member of the study team was approached by the Army to write an article for "The Environmental Professional''---a journal of the National Association of Environmental Professionals. The Army was hoping to gain political capital by touting its willingness to go above and beyond the call of duty in fostering public participation in the program. Calling these groups a form of "unconventional public participation,'' Carnes (1989) indicated that the Army-funded study teams went beyond what is required by NEPA, and this is probably correct since NEPA does not require that the entity that plans the

action pay for potentially-impacted communities to conduct their own independent studies. This particular issue of *The Environmental Professional* (1989) was dedicated to the Chemical Stockpile Disposal Program and the professor was asked to write about the Army-funded study groups, which he did. The article he wrote was entitled, "Public Input To the Chemical Stockpile Disposal Program NEPA process'' (Hindman 1989). In the article, professor Hindman praised the groups' inclusion in the process. He wrote, "The team was authorized by the command structure to participate in the process. The team was not an "outside'' group. Army staff had orders to assist the team in identifying and getting access to documents, information, and meetings. Team members rarely sensed that individual staff members were being circumspect or withholding information'' (Hindman 1989, p. 295). "Other study teams,'' he argued:

> stayed outside the process and analyzed the results in written reports. . . In contrast, the team became a part of the group that developed the FPEIS. Their views became part of the debates that led to decisions on what topics would be studied and how data would be evaluated. Professional staff had to justify conclusions not only to professional peers, but also to informed citizens before the conclusions were accepted. (Hindman 1989, p. 295).

When questioned about how he came to write the article, the author replied, "The article I wrote was at the request of Oak Ridge. They fed me some information... They were interested in how public input could be quelled/controlled. They wanted to get it off their backs so they could get on with their jobs.'' The experience had a positive impact on this professor in terms of his perception of the Army. "I changed my opinion of the Army,''

he said, "in that they are just a bunch of people doing their job. . . I {don't} see them as a monolith nor as unstoppable. Stereotypes got broken down."

However, the inference to be drawn from all this is that the Army had gone "above and beyond the call of duty" to involve people in the process---a notion which the facts call into question, for regardless of the money the Army produced for community-based independent studies, the people were still left out of the decision-making loop, and the conclusions of the studies were largely ignored when they went against Army prerogatives. Hindman's (1989) insistence that the Citizens' Study Team had enormous impact on the Army because of their *inclusion* in the "process" is curious in lieu of what the Army actually did with the information.

3.11 Army Response to Community Study Groups' Conclusions

Citizen activists greeted these newly-created study groups with great optimism if not euphoria. However, their happiness over what appeared to be a victory for the communities was short-lived. Despite the rhetoric of "inclusion," the report issued by the "Kentucky Community Study/Review Team" met with the same fate as the report issued by the "Madison County Task Force on Chemical Weapons." Basically, it got filed and largely ignored. When questioned about the ultimate disposition of the Kentucky Community Review Final Report, another member of the Study Group remarked, "The final report was duly sent to the Army and they duly noticed it." Another member of the study team speculated on <u>why</u> the Army didn't do more with their report. He said, "They {the Army} listened to us and changed things. November 1987 everybody (i.e., all the Army-funded community study groups) had to have them in all {at} the same time.

However, the FPEIS was due within a month or two. The Army was so tied up in generating this other document {i.e., the Final Programmatic EIS} that they were either too busy or not interested in reading {it}." A knowledgeable attorney assigned to assist the community activists in their opposition efforts said of the Army, "They have tried to buy their silence with financing their study group then ignoring it."

Some of the issues the citizens raised were incorporated in an Appendix to the FPEIS (see FPEIS 1988, Volume 3, Appendix R, *Evaluation of Community Groups' Inputs*), together with the Army's responses. Appendix R of the FPEIS contains a brief, site by site, overview of the issues and concerns expressed by the community study groups, followed by the Army's response. However, the Army did not act on the substantive issues raised. The Army used a variety of strategies to divert attention away from the fact that they were not going to alter their "Preferred Alternative." For example, they would often point out that the FPEIS, "is written now in clearer fashion"(FPEIS 1988, Volume 3, p. R-10), responding to criticisms that the DPEIS was unclear about many important issues. Another favorite stratagem was to direct the reader to another section of the three-volume report for a "fuller discussion" of the topic at hand, or it was stated that the Army had already studied this particular issue (for example, the transportation alternative) and found it wanting, thereby fulfilling their requirement to "respond" to citizen inquiries. A typical example of the former comes from the NAAP Community Study. The group at Newport raised concerns over the risk analysis and associated assumptions regarding the probabilities of risks, to which the Army in the FPEIS (1988) responds: "The methods and

assumptions of the risk analysis are detailed in the risk analysis report {Appendix J}'' (FPEIS 1988, Vol. 3, p. r-16).

Last but not least, and probably most pernicious, is the tactic of assuring the public that an issue would be more fully elaborated in a future document, for example, in a site-specific study, even going so far as to say that, "Data cited in the community study may be useful in the site-specific NEPA document.'' Since the issue of detailed site specific studies was foremost in the minds of citizen activists, this dodge was very effective because it gave false reassurances.

3.12 Community Review Studies at Other Sites

The Army offered local citizens at the seven other sites an opportunity to undertake their own local studies (*Fed. Reg*.. 52:4646, Feb. 13, 1987), but only four others took them up on the offer: (1) Aberdeen Proving Ground (APG), MD., (2) Pine Bluff Arsenal (PBA), Arkansas, (3) Umatilla Depot Activity (UMDA) in Oregon,(4) and Newport Army Ammunition Plant (NAAP) in Indiana (Personal Communication: Public Affairs Officer, Office of the PM for Chem. Demil. , Aberdeen Proving Ground, MD. 1/9/94) (See Table C-3; C-4).

With their Army funds, the citizens at the Aberdeen Proving Ground (APG) hired E.A. Engineering of Towson, MD. to conduct the study for them. E.A. Engineering concluded that, "the concerns of the citizens were valid and that the Army should go back and look at alternative technologies.'' The Aberdeen, Maryland group of Concerned Citizens reported a similar disaffection with the whole public participation process.

The Citizens' Study Team assembled at the Umatilla (Oregon) site also expressed concerns about the fate of their study. They suggested a need for

professional conferences in order to bring the matter to the attention of the broader scientific community and to validate their results through the normal peer-review process. In their report they stated, "Our review is a 'one shot' affair. It's too easy for Army personnel to dismiss a criticism by saying, 'Oh, that subject is covered in a report that will be out next month'" (Umatilla Study Group 1987, p. A-42). And, indeed, that is exactly how the Army handled many of the concerns raised by the community studies, largely by indicating that things would be dealt with in a vaguely distant future site-specific document.

Ultimately, though, the Umatilla Study Group came out in support of the Army's incineration plan. The make-up of the team may have had something to do with it. Rather than being composed of concerned citizens from the community, the team was made up of civil engineers and toxicologists from the local university---Oregon State University. They concluded, "The study team feels that the operation {sic} in the demil facility are well thought out and should be as risk free as possible. . . The incineration (demil) permit is thorough and should be approved. The projected atmospheric emissions are attainable and not hazardous to human health" (Umatilla Study Group 1987, p. iii).

The Pine Bluff Arsenal (PBA) community study also supported the Army's decision. Working out of the University of Arkansas at Pine Bluff, they wrote, "Based upon our findings, conclusions and other pertinent recommendations, we firmly support the Army's "preferred" programmatic disposal alternative: The On-Site Disposal Alternative" (Demecs et al, 1987: PBA Community Review Study, p. ii). However, under Section 1.1, under 1.1.3 Recommendations, the study group called upon the Army to begin

immediate site-specific studies of the PBA area. It should be noted that the Army-funded community study at Pine Bluff Arsenal was performed many years before there was any organized opposition at the Pine Bluff site. The document is basically a rubber stamp for the Army's program, and is definitely not a thoroughgoing critique of the existing policy.

In Newport, Indiana, the site of the Newport Army Ammunition Plant (NAAP), the Concerned Citizens of Vermillion, Parke, Vigo, Fountain and Tippecanoe Counties also took advantage of the Army's offer to conduct an "independent" citizen's review of the Draft Programmatic Environmental Impact Statement (DPEIS) which included plans for an incinerator at that site. In addition to concerned citizens from the above-names counties, this group, similar to APG, hired expert consultants to advise them, but the citizens remained in control of the process. They concluded, "If safety considerations are, indeed, meant to outweigh all other concerns surrounding the nerve agent disposal project, the national disposal option, especially in the form of a desert siting of the incinerators (see p. 22 of report) would emerge as the option of least risk" (Community Review Final Report {NAAP} 1987, Section 11: Major Recommendations, p. 25).

The Newport team also accused the Army of obfuscation in the way they handled queries from citizens. They observed that in response to much criticism regarding the Army's Draft Environmental Impact Statement (DEIS), the Army produced (mostly during 1987) "a steady stream of rewrite volumes. These are generally of a much improved quality, but prevented us from arriving at an overall evaluation of the disposal plan" (Community Review Final Report {NAAP} 1987, p. 5). Specifically, they argued that "the newly developed addenda to the EIS, although much superior to the July 1986

statement, still leave many questions unanswered, and above all, have obstructed many issues by the addition of reams of quantitative risk assessments that tend to impart to the study an air of objectivity and reliable risk assessment" (Community Review Final Report 1987, p. 5).

Considering all the time and money (at least $500,000) spent on these independent community studies, and the fact that the studies produced in excess of 1,000 pages of text, one could reasonably ask what was accomplished. On the one hand, the studies are claimed to be evidence of the Army's willingness to involve citizens in the process, and indeed, Army Public Affairs moguls point this out at every opportunity. On the other hand, as one of the co-founders of Common Ground (Kentucky) commented: "Immediate and since, almost nothing---except PR for the opposition (i.e., the Army). {*There are* } cumulative effects however...As we proceed, perhaps we will find later that it {i.e., the report} will carry weight in a federal court as evidence. It's valuable rhetorically, but not substantively. ''

3.13 The Emergency Operations Center (EOC)

The Army's half a million dollar Emergency Operations Center (EOC) at LBAD has been another source of controversy adding to the Army's complications in dealing with the population at the Kentucky site. In the fall of 1989, the Army appointed retired Brig. General Merwyn Jackson to oversee the County's emergency plans for the CSDP at LBAD. A fifteen-member community team was assembled to assist in making decisions regarding the EOC which included local political elites and citizen activists.. The government agency FEMA (The Federal Emergency Management Agency) is

funding the $555,670 project, according to the local newspaper (*Berea Citizen*, September 13, 1989, p. 1).

A citizen and member of the EOC panel accused the local Army representative of making unilateral decisions and not consulting the committee. There were bad feelings created because the facility was slated to be built in Richmond on North Keeneland Drive rather than at the Madison County Airport, which was argued to be a more central location. An activist from Berea echoed a comment that rings throughout this controversy, "The steamroller is still rolling," he said, "I feel the committee was left out. We felt it was already decided when we started talking" (*Berea Citizen*, September 13, 1989, p. 1).

The ostensible reason the Army gave for building the facility was to enhance emergency preparedness capability in the area. However, citizen activists who are also medical personnel have questioned the wisdom of putting so much money into building an EOC. As one physician/activist put it, "We're not ready. There are five (5) respirators at Berea Hospital and five (5) at Pattie A. Clay Hospital in Richmond;...The staff are not trained." Another issue that irked members of the citizens' committee appointed to work with General Jackson on matters relating to the EOC, was the fact that he set the meetings at inconvenient times, e.g. at 1:30 P.M. in the afternoon. One member of the committee remarked, "I requested several times in writing, 'Please have meetings at a different time" On one occasion, a citizen said he wrote to the Pentagon requesting sixty gas masks for his people to use in case of an emergency. The Pentagon told him he could "buy them from a surplus store." (Personal Communication: activist to author 1/17/92). Another member of the study team told me that although the citizens'

opinions were not taken into account in terms of "whether" or "where" to site the EOC, however, they were given the opportunity to select the saying that was to go on a plaque which was to be affixed to the building. After some deliberations, the committee selected Thomas Jefferson's famous quote, "Eternal Vigilance is the price of freedom." Marcuse (1968) has commented on just these types of limited choices, which he says are indicative of a kind of democratic "unfreedom" prevailing in advanced technological society. He wrote,

> Under the rule of the repressive whole, liberty can be made into a powerful instrument of domination. The range of choice open to the individual is not the decisive factor in determining the degree of human freedom, but what *can* be chosen and what *is* chosen by the individual" (Marcuse 1968, p. 7).

Allowing citizens to select the quotation for the EOC plaque (and calling that citizen participation), while preventing them from having any say whatsoever in *whether* they want the EOC and all it stands for, is ludicrous in terms of what is at stake.

Community leaders continue to speculate on a possible "hidden agenda" for the expensive EOC. Notwithstanding its potential usefulness in the "unlikely" event of an "off-post" release of nerve agent, the Mayor of Berea was quoted in the *Berea Citizen* as saying, "the money could be better spent upgrading medical facilities and stockpiling drugs that could counteract the effects of the deadly nerve gas, which is stored underground at the depot" (*Berea Citizen*, September 13, 1989, p. 10). There is little room for doubt that the community's suspicions may be quite accurate when we examine the Army's list of functions for the EOC. For we discover, that in addition to establishing "a communications network 'of surprising magnitude,'" the EOC

was also designed "to establish a public-relations effort to quell what Jackson called, 'rumors constantly floating'. 'This may be the largest challenge,'" he said (*Berea Citizen*, September 13, 1989, p. 10).

3.14 The 'Colonized' and 'Colonizer': The Army Depot as a Colony of the Pentagon

The relationship between the communities adjacent to the Army depots and the Pentagon is similar to that of 'colonized' and 'colonizer' as described by Gaventa (1980), Memmi (1967) and Balandier (1966). Gaventa (1980) writes:

> The establishment of dominance includes the development of an administrative relationship by the dominant society over the dominated, either through the direct control of the representatives of the former, or through the development of collaborators or mediating elites amongst the latter. . . . In short, the colonization process involves the development of a mobilization of bias ---a set of predominant values, beliefs and institutional procedures that operate systematically to the benefit of the colonizer at the expense of the colonized. It is the development of a second-dimensional power relationship (Gaventa 1980, p. 32).

The events surrounding the Army's building an Emergency Operations Center (EOC) at the Lexington-Bluegrass Army Depot show clear evidence of power processes at work. The depot (e.g., LBAD) is in a dependent position vis-a-vis the Pentagon, by virtue of (a) myths about the power of the Pentagon and, (b) by sheer force of economics. Military leaders at the Pentagon are in a position to dictate what happens at Army depots. In the case of the EOC controversy, retired Brig. General Merwyn Jackson, stands between the Army and the community, and while appearing to be representing the interests of the community in terms of preparing the

emergency response plan, he is in reality representing the Army's interests. Because LBAD is the most recalcitrant site in the entire CSDP, it became important for the Army to establish a way of "mitigating" (one of the Army's favorite euphemisms) the very vocal opposition.

Gaventa (1980) has written at length about the role of what he called *mediating elites* in maintaining power processes. He writes: "The dominant institutions and social values that affect the Valley from beyond have often been found to be mediated by a local or regional elite" (p. 258). There is ample evidence that the Army's *mediating elite* used the position to further promote the Army's preferred alternative, i.e., incineration. Members of Common Ground reported seeing Gen. Jackson on a T.V. program talking to local school bus drivers about the merits of incineration. They thought this curious and wondered what his {Jackson's} remarks had to do with emergency management, since ostensibly that was his primary function. According to reports, General Jackson was also seen giving informational talks to ladies clubs, business and civic groups on incineration. Gaventa (1980) has written, "Though appearing from within as spokesmen for the local situation, the elite are intertwined in interests and outlook with the absentee forces upon which their own relative dominance in the local situation depends" (Gaventa 1980, p. 258). At the present time, the incinerator complex at LBAD has been placed on hold pending a permit from the state of Kentucky, and may, in fact, never be constructed. As Memmi (1967) reminds us, "In order for the legitimacy to be complete, it is not enough for the colonized to be a slave, he must also accept this role" (Memmi 1967, p. 88-9). If such is the case, then the Army has its work cut out for it in Madison County.

3.15 Building a Movement: Opposition Grows at Other Sites

The localized citizen opposition at LBAD has rapidly grown into a nationwide movement against chemical weapons incineration. While this research is largely confined to examining the forces at work at the Lexington-Bluegrass Army Depot, it is incumbent on us to at least briefly describe the situations at the other seven sites that house the CONUS stockpile. We will also examine other protest actions such as the one in the former Soviet Union at Chapayevsk and the Hawaiian Islanders opposition to the Army's JACADS facility located on Johnston Atoll (Kalama Island) in the South Pacific.

3.15.1 Aberdeen Proving Ground (APG) {Maryland}

Aberdeen Proving Ground, situated on the Chesapeake Bay twelve miles northeast of Baltimore is within an eighty mile radius of Washington and Philadelphia. The Proving Ground is a major research and development center for both chemical and biological weapons and employs 20,000 civilians and military personnel. The agent are stored here represents only 5% of the total stockpile. No nerve agents are stored at Aberdeen, only ton containers of mustard agent which are stored in the open adjacent to an airstrip (Weide Field) which has recently become the subject of heated debate between the Army and the citizens. The Army's new training facility for the CSDP is also situated at APG.

Second only to LBAD in the ferocity and level of sophisticated organization, is the citizens' opposition movement at the Edgewood Area of Aberdeen Proving Ground. Founded in 1986 by a feisty

homemaker/environmental activist, they first called themselves, the "People's Environmental Coalition" which later became "Concerned Citizens for Maryland's Environment, Inc. (CCME)." Fearing that they would become "the East coast's hazardous waste site," citizens began organizing around the theme of getting the Army to do site-specific studies of the area, which they felt certain would demonstrate to the Army that the Aberdeen site was not an appropriate place to build an incinerator, noting that "there is already a Superfund site here." They also vigorously supported the idea of transporting the stored mustard gas out of APG.

The founder of CCME recalls that after the release of the Army's programmatic decision, the Army told them "Not to worry---It's just a draft," and indicated that when they released the site-specific programmatic statement, things might change. She indicated that the Army said that the transport report would be considered. As a result of these promises, she recalls:

> We were quiet for two years. We were not organized. . .We were sitting for two years doing nothing but talking to the Army {1984-1986}...We suspect the Army made the decision to incinerate first...We were not organized as a community. We were just a bunch of little groups."

Another activist expressed similar sentiments in describing the early briefings held by the Army at the Aberdeen site. "In the beginning, " he said, "the Army held regular monthly meetings at a conference center at the arsenal and then little things started to irk me." He continued:

> I went religiously once a month {between 1985-1986}. To be honest, it's hard to sustain the drive. It's hard to keep up. That's the beauty from the Army's point

> of view. They've learned their lessons well. They were wearing us down. It's like a big headache that won't go away. Sometimes you get so frustrated.

Both of these citizens were members of the Army-funded ($100,000) community review study team at the Aberdeen site. When asked what the Army did with the report, he commented, "File 13." "Then we really got angry," he said, "we went into the community and got some positive results."

In his study of young radicals, Kenneth Keniston (1968) made an observation that might serve as a summary description of the experiences of the citizen's group "Concerned Citizens for Maryland's Environment." He wrote, "What is most impressive is not their secret motivation to have the System fail, but their naive hope that it would succeed, and the extent of their depression and dissolution when their early reformist hopes were frustrated" (Keniston 1968, p. 127).

In 1986, CCME went about building a grass-roots organization. They went door to door handing out flyers, people donated both time and resources, e.g, printing. The founder of CCME describes their early efforts. She said:

> At first, when the Army states that there will be scoping meetings, nobody comes. Now, I call up and we go into the community. You've got to get out! In February we filed with the authorities...People only respond by being yelled at. We used to think you could sit back---you have to get out there!

They also began linking up with other like-minded entities, e.g., Common Ground/KEF, Inc. in Kentucky. At one point Citizens' Clearinghouse for Hazardous Waste (CCHW) invited them down to participate in a workshop on incineration and Greenpeace was helpful in providing technical information as well as moral support. They looked to the Kentucky groups

for leadership and support and began forging communication lines and developing strategy. They wrote letters to the editor and sold buttons at scoping meetings. The media in the vicinity of APG has reportedly been "very cool, very conservative, very much in favor of the Army." In terms of strategy, CCME decided that "the boss of the Army is Congress. . . so we've targeted Congress." In January 1991, CCME was still asking the Army to conduct site-specific studies. In a letter to the Honorable Helen Delich Bentley, the President of CCME said, "the Army must go back and do site-specific environmental impact studies for each of the eight sites and treat each site as the unique site that it is" (Letter from President CCME to the Honorable Helen Delich Bentley, July 22, 1991.)

Another problem faced by Concerned Citizens for Maryland's Environment (CCME) involves the loss of political support. The founder of CCME talked openly about the possible co-optation of a political leader who was formerly a strong supporter of the citizens' opposition. This is how she explained it: "We lost a valuable person. She changed sides. Used to be vehemently against the Army. She was waiting for an appointment from the county executive. Now she is on the Army's side."

More recently, a second opposition group has joined the struggle against the Army's incineration plans at the Aberdeen Proving Ground. Calling itself the "Coalition for the Safe Disposal of Chemical Weapons," the group is composed of citizens from Kent County and the surrounding environs. This group mobilized in 1992 shortly after *60 Minutes* aired its segment on the Johnston Atoll incinerator and the CSDP. At first people began searching for information and asking questions of the Army. According to one of the founders of the Kent County group, "The Chem-

Demil Program at Aberdeen responded to the people not by answering their questions, but by sending stacks of documents like the Emergency Evacuation Plan prepared by the Oak Ridge National Laboratory, the Record of Decision, the MITRE evaluation of the GB rocket campaign and others'' (Statement by John E. Nunn III before Committee on Government Operations, Second Session, 102nd Congress, Chemical Stockpile Program, June 16, 1992, p. 2).

In a bold action, the Kent County group once persuaded the local politicians to refuse federal money for emergency preparedness related to the CSDP. They later recanted this position. They set up a speaker's bureau which sent speakers to schools, rotary clubs, private clubs and business associations to talk about the proposed incinerator. However, things have not always gone smoothly at the APG site. As one activist and 30-year resident of the Edgewood area commented, "This is not a popular issue. The real estate people in Harford County are against us. {Out of } 180,000 people --- 7500 to 8000 work at Edgewood Arsenal. APG comes in second only to the port of Baltimore which brings in about 1.5 billion to the area; APG pulls in about a billion.''

In April of 1992, the Kent County group sponsored a symposium at Washington College in Chestertown, Maryland in which they invited individuals from several government agencies. The Army elected to send the Deputy Program Manager and Technical Director for the Chemical Demilitarization Program who has a reputation among the activists for being extremely witty and personable, but nonetheless 100% behind incineration. The meeting was well attended --- over 1000 people. However, it did not prove fruitful for the citizens and many questions went unanswered. As a result of this meeting, an activist said, "a handful of citizens grew almost

overnight to over 8,000 people'' (Statement by John Nunn 1992, p.2). Later on in his statement, John Nunn reported that over 4,000 people signed a petition opposing the incinerator and advocating exploration of alternatives to incineration at Aberdeen. In addition to these individuals, the Kent County group mobilized opposition from twenty-four other local groups in the Aberdeen area including: The Chamber of Commerce, Farm Bureau, Kent County PTA, Kent Conservation, Kent County Commissioners, Mayors and many more. Construction of the APG incinerator facility is scheduled to begin in 1997 according to the latest version (June 1994) of the CSDP Implementation Schedule (see Appendix C).

3.15.2 Newport Army Ammunition Plant (NAAP) {Indiana}

The Newport Army Ammunition Plant is situated in Vermillion County, in west central Indiana. The installation is located approximately 24 miles southeast of Danville, Illinois and 26 miles north of Terre Haute, Indiana. The chemical storage area and proposed CSDP site is located in the eastern part of NAAP approximately half way between the installation's northern and southern borders. The nearest residential community is located approximately 4 km from the site (DRAFT, Evacuation Time Estimates for Newport Army Ammunition Plant and Vicinity 1991).

Army documents describe the area surrounding the NAAP as predominantly rural in character. The nighttime population within 5 km of the proposed site is estimated to be about 935, with approximately another 3,560 within 10 km; 21,000 within 20 km; and about 80,000 live between 20 and 35 km of the plant site. (Emergency Response Concept Plan for Newport Army Ammunition Plant and Vicinity 1989). A member of the Newport

Citizen's Study Group accused the Army of spending big money to win residents' support for incineration, citing the Army's budget for an Emergency Operations Center in the Rockwell area which is estimated to cost approximately $400,000. Another EOC is going up in nearby Clinton, and the town's former mayor was recently designated as its director. The Army's tactics, a citizen claims, are seen as "nothing more than a bribe'' (*The Salt Lake Tribune* , Utah, Sunday, January 3, 1993, p. A-8). Construction of the incinerator facility at Newport is tentatively scheduled to begin in 1998. (See Table C-2).

3.15.3 Tooele Army Depot (TEAD) {Utah}

Tooele Army Depot in Tooele Utah, with the largest amount of the nation's stockpile of chemical weapons (42.3 %) ironically has the least citizen's resistance to the Army's grand plan. Currently Tooele Army Depot is the largest employer in Tooele County and the second largest federal employer in the state of Utah (Proceedings of Discussion Workshop, Salt Lake City, Utah, August 15, 1984, p. 3). The Depot occupies 44,092 acres in Tooele County, Utah and lies about 36 miles south-southwest of Salt Lake City. The depot consists of two areas 20 miles apart. The North Area is three miles southeast of Tooele City, the county seat. The South Area, approximately 45 miles from Salt Lake City contains 19,364 acres and is home to the Army's Chemical Agent Munitions Disposal System (CAMDS). Tooele County is the second largest county in Utah, containing over 4.4 million acres. The county's population is roughly 32,800, 19,000 of whom live in Tooele City (*Richmond Register*, Saturday, August 18, 1984, p. 1). Tooele stores ton containers of nerve agent as well as mustard and an assortment of rockets

and/or spray tanks containing either HD, HT (mustard) or (nerve agents) GB or VX. Additionally, a small amount of Lewisite is stored at TEAD.

Obviously, the Army is a major presence, and despite the negative press caused by the Dugway Sheep Kill in 1968 when 6000 sheep died as a result of an Army chemical weapons test gone awry (Van Kampen et al 1968), the people are somewhat blase about the Army's activities. TEAD already has been home to the Army's first trial facility, i.e., the Chemical Agent Disposal System (CAMDS) for many years. According to the paper, the attitude about the plant that destroys deadly agents seems to be "It's in Tooele" rather than its 45 miles from Salt Lake City and Provo" (*Salt Lake Tribune*, January 3, 1993, p. A-8). Tooele was the unanimous choice for a Western incinerator.

Opposition to the Army's plan isn't non-existent, though. Currently, there are two active opposition groups at this site. One is an outgrowth of the Sierra club and another, more recent group calls itself, "the Downwinders." The Tooele groups have done some interesting things to bring the matter to the attention of the populace. Their strategy has been to attack the Army's emergency preparedness plan. They have charged that CSEPP, the Army's emergency preparedness plan for the storage sites is, "like the fallout preparedness plan of the 50's, being prepared by government officials, with no public input" (*Utah Sierran*, June/July 1992, p. 6). According to activists in Utah, during the three years the Army has been working on the plan, millions of federal dollars have be poured into increasing the CSEPP staff, in replacing an outmoded computer system, and in sponsoring monthly meetings at a local hotel conference room, complete with all the amenities. Instead, activists insist the money would be better spent on training medical personnel or hazardous-materials response teams. Additionally, they fear

that with other sites lobbying to have their stocks transported out, Utah will become the central disposal facility for the stockpile.

At one time, activists placed bandages (as if bandages would be of any use with nerve gas) in packages destined to be handed out by the Boy Scouts during the summer of 1992---the Army's "Yellow Bag Program" (*Utah Sierran*: June/July 1992). These packages were intended to be used by the Army as "educational" material concerning emergency preparedness; thus, mocking the Army's credibility on the "safety" issue and causing Army Public Affairs moguls some consternation. They worried that this group's "*militant* " tactics would spread to other sites (Field Notes: ORNL Tasking Meeting, 1993). And worry they should, because as Gaventa (1980) has pointed out, "Once the patterns of quiescence are broken, the likelihood of further action by B increases and the options for control wielded by A decrease" (Gaventa 1980, p. 25). Marcuse (1968) has also theorized about why this type of tactic is often so effective. He writes, "Their opposition hits the system from without and is therefore not deflected by the system; it is an elementary force which violates the rules of the game, and in doing so, reveals it as a rigged game" (Marcuse 1968, p.256).

Despite the creativity of the citizens' opposition movement at this site, the Army has completed construction of the first full-scale nerve-gas incinerator in the continental United States at Tooele, Utah and has begun the next step called "systemization" which involves testing the various components of the system.

3.15.4 Pine Bluff Arsenal (PBA) {Arkansas}

Second only to Tooele Army Depot, Pine Bluff Arsenal in Arkansas has the largest percentage of unitary chemical weapons with some 12% of the U.S. stockpile. When the Army was considering regional sites, Pine Bluff was cited as a likely candidate for disposing of weapons east of the Mississippi, although their first choice was Anniston, Alabama. A variety of agents are stored at PBA including the nerve agents VX and GB and mustard agents H, HD, and HT. All are stored in earth-covered ammunition bunkers called igloos.

The Arsenal is at the heart of Pine Bluff, a city of 60,000. Little Rock, Arkansas capital with a population of 180,000 is 35 miles to the north. Pine Bluff Arsenal is in a decidedly rural area where poverty is a fact of life. The citizens' opposition movement in that area--Families Concerned About Nerve Gas Incineration--is led by Regina Dooley who worries about the environmental effects of an incinerator on the local citizenry. "It only hurts us worse because we're poor," she said in an interview in the *Pine Bluff Commercial* (Sunday, August 2, 1992, p. 1). Dooley explained that people in the area are "so busy trying to stay alive that they don't have concern for what is going on around them." She stresses the need to educate people on what has been going on. However, judging from remarks made by one of the local political elites who said, "I can't understand where you're coming from. I trust the experts to protect the citizens" (*Pine Bluff Commercial*, Thursday, August 20, 1992, p.1), there is more than just the fact of poverty driving the quiescence of the people of Pine Bluff. It is quite obviously an "Army town." General sentiment favors the Army's view and people are supportive of the incineration plan. According the Army's latest implementation schedule

(CSDP Implementation Schedule, June 1994), construction of the incinerator complex at PBA is scheduled to begin in September of 1995, testing in 1998, and operation is to begin in 1999.

3.15.5 Anniston Army Depot (ANAD)

Anniston's stockpile of rockets, mortars, land mines and containers of nerve and mustard gas represents 7.1% of the U.S. total stockpile of unitary chemical weapons, and, like Pine Bluff, some site preparation for an incinerator has been funded and is proceeding. The nearest city to the storage facility is Anniston, a town of 27,000 people, eight miles east of the depot. Birmingham is 60 miles west of the Army base; and Atlanta is 90 miles east.

Although the Army's disposal program for the chemical weapons has ignited formidable opposition elsewhere, the newspapers report that, "it's stirred barely a ripple of interest in Calhoun County. Elected officials have been unanimously supportive. Public hearings have been scantily attended'' (*The Anniston Star*, June 15, 1992, p. 3A). The *Salt Lake City Tribune* also reported on the situation at Anniston with regard to the chemical weapons program. In August of that same year (1992), a story appeared in the NATION section of *The Salt Lake Tribune*, having been picked up from the *Los Angeles Times*. The story, entitled, "Pending Chemical-Weapons Destruction Raises Fears,'' described the relationship between the Army and the townspeople in the vicinity of the Anniston Army Depot. It began with these words:

> The folks here have always been friends with their military neighbors. God-fearing and patriotic, this quiet corner of the Deep South, halfway between Atlanta and Birmingham, Ala., is proud to be home to Fort McClellan and the Anniston Army Depot,

> the area's largest employer. (*The Salt Lake Tribune*, August 16, 1992, A-12).

The article goes on to say that evidence of this support exists in the form of six monuments to the veterans of every conflict from the Civil War to the Vietnam War which grace the center of town. So when "Families Concerned About Nerve Gas Incineration'' began organizing, they had their work cut out for them. According to opposition leaders, "many people don't even know that Anniston Army Depot will be one of eight U.S. sites where the munitions will be burned'' (*The Anniston Star*, June 15, 1992). "Very few people knew what was going on,'' another activist commented. However, in the summer of 1992, housewives began learning about VX and GB chemical agents and M55 rockets. The newspaper reports that, "Business people and blue-collar workers, braving the resentment of a conservative and pro-military majority are starting to organize'' (*The Salt Lake Tribune*, August 16, 1992, p. A-12). According to reports pro-military feelings in Anniston run very high and public officials all support incineration.*The Salt Lake Tribune* reports that "Nowhere have pro-military feelings been as great as in Anniston, which got its chemical weapons in the 1960s and where local officials today all either support the incineration plan or have not taken a stand'' (*The Salt Lake Tribune*, August 16, 1992, p. A-12).

Those who oppose incineration have been supported in their organizing efforts by the activists in Kentucky, specifically, the leaders of Common Ground and the Director of the Kentucky Environmental Foundation, but it has been an uphill battle. Vickie Tolbert, a member of "Families,'' speculating on why organizing was so difficult at this site said, "I'm not really sure why there's been so little public involvement...The only

thing I can think of is that we have a history of being a little bit apathetic and trusting as far as being taken care of around here'' (The Anniston Star, 6/15/92, p. 3A).

A noted scholar who has written extensively about grassroots environmental movements around the issue of hazardous waste disposal has followed the activities of citizen groups involved with the CSDP in Anniston, Alabama. (Bailey 1989; 1992; 1993; 1994). In the course of his work, he has come across two groups in Anniston who have mobilized around the CSDP. One group opposes the Army's incineration plan ("Families Concerned About Nerve Gas Incineration') the other supports the Army---the countermovement! He characterizes the citizen opposition group there as "a fairly urban, urbane and cosmopolitan group.'' The pro-Army group at ANAD, called "Citizens for SPRING'' (which stands for "**S**afe **P**roven, **R**eliable, **I**ncineration of **N**erve **G**as''), has an executive director and seven standing committees. According to Professor Bailey (whose field notes of the Army's public meetings have provided keen insights into the forces at work at ANAD), SPRING is led by a retired Army employee whose wife is the Protocol Officer at the Depot. In August of 1993, "Citizens for SPRING'' sponsored a public forum in which they brought in the Army's "heavy artillery,'' i.e., the Deputy Program Manager and Technical Director for the CSDP and the Public Affairs Officer from Program headquarters at Aberdeen Proving Ground, MD. Citizens for SPRING published a flyer in which they detailed their beliefs about the safety of incineration and the dubious prospects of finding an alternative technology. The document prominently displayed a quotation from Franklin D. Roosevelt which says: "The only limit to our realization of tomorrow will be our doubts of today'' (Citizens for

SPRING, no date, 853 Brookhaven Road, Anniston, AL. 36201). This is similar to the military's use of Thomas Jefferson's quote, "The price of freedom is eternal vigilance," being used to defend the ideology of deterrence!

Professor Bailey and his staff concluded what others have also deduced, that the Army is really not interested in exploring anything other than incineration. During the question and answer session at a public meeting which was held on August 15, 1993, at Anniston City Auditorium, someone inquired whether equipment had been ordered for the Anniston incinerator. The answer given was, "Yes, ordered before alternative technologies report. 17 million dollar investment. Will NOT be a factor in decision about Anniston" (Field Notes, Bailey 1993, p. 4). Construction of the ANAD facility is scheduled to commence in 1995; testing is to begin in 1997 and the facility is to be fully operational by 1999 (CSDP Implementation Schedule, June 1994).

3.15.6 Umatilla Depot Activity (UMDA) {Oregon}

Umatilla Army depot sits in a semi-arid corner of northeastern Oregon six miles from the Columbia River. The nearest city is Hermiston, population 10,000. Within a 65-mile radius, however, are Walla Walla, Washington and Pendelton and Richland, Oregon. Umatilla's 5,200-ton stockpile of lethal munitions is 11.6% of the total stockpile. According to a statement made in a report issued by the Army-funded community study group at UMDA, "There is strong support from the majority of the citizens for this project. The Army has good credibility in the area around Umatilla" (Umatilla Study Group: Final Report 1987, p. A-18). However, there is a viable and well-organized group of citizens who oppose the plan. The citizens' group called "Citizens for Environmental Equality," worries that

dioxins will end up in the food chain. Given that Hermiston is an agricultural-based economy, this is a prime concern to activists at UMDA. The design work for the proposed incinerator at Umatilla was about 90% complete as of April 1993, however, further work was put on hold until after the Alternative Technologies report. According to the Army's timetable, construction of the incinerator facility complex is scheduled to begin during 1995, testing through 1998, and incineration is to commence in 2000 (CSDP Implementation Schedule, June 1994).

3.15.7 Pueblo Depot Activity (PUDA) {Colorado}

Pueblo Depot's 9.9% of the nation's stockpile haunts some of the 100,000-plus residents of Pueblo 14 miles to the west. The public is skeptical of the Army's motives, according to one member of the Sierra Club who heads the citizen protest group at PUDA. He reports that "enormous sums of money are being pumped into 'sustaining incineration' which is an archaic and unreliable technology" (*The Salt Lake Tribune*, January 3, 1993, p. A-8). However, the incumbent congressman for the district would rather the weapons be destroyed on site than transport them over land, although he admitted not being wedded to the concept. Recently, the Rocky Mt. Chapter of the Sierra Club has been permitted to have representation on Governor Romer's CW Advisory Committee, as part of powers granted to governors under the 1992 Defense Authorization Act. Finally, a second opposition group has formed in Colorado: "Citizens for Safe Chemical Weapons" (Common Sense: A Newsletter of Common Ground funded by KEF, Inc., April 1993).

3.16 The Case of Chapayevsk: Citizen Opposition in the former Soviet Union.

Like the United States, the former Soviet Union has amassed its own deadly arsenal of chemical weapons---approximately 50,000 tons according to the Soviet Minister of Foreign Affairs (DTIC, *Le Monde*, 29 December 1987). These weapons were produced and stored at the military complex at Chikany, which is, in the words of one military expert, "without doubt the largest chemical warfare complex in the world'' (DTIC, *International Defense Review* 1987, p. 6). "Chikany is located about 600 km to the southeast of Moscow, on the Volga, in the immensity of the Russian steppes" (DTIC, *International Defense Review* 1987, p.6). (The population of Chiknay is about 5000). According to reports, there are not less than nineteen different types of Soviet chemical ammunition stored there---everything from artillery shells to technical missile charges. The new Multilateral Chemical Weapons Convention, (CWC) mandates the destruction of these weapons as well as those of the United States and requires that the U. S. and Russia cooperate on destruction technology.

The Russians have tried neutralization as one method of destroying their CW stockpile. In October of 1987, a group Western experts were invited to tour the Russian complex and to witness an example of their latest destruction technology, i.e, neutralization. In 1987 the Russian government began construction of a large chemical weapons destruction factory (utilizing a neutralization process) at Chapayevsk (population 90,000) about 500 miles southeast of Moscow---and then promptly closed it because of citizen opposition. "The Chapayevsk facility was completed last year but the public objected to it, citing environmental concerns, so the government decided to close it," explained Mikita P. Smidovich, the deputy head of the Soviet

delegation to the Geneva Conference on Disarmament (*News Focus*: Chemical and Engineering News, August 12, 1990, p. 18). Commenting on the unusual situation in the former Soviet Union, *Chemical and Engineering News* editors commented that:

> Such ecological concerns, almost *de rigueur* in the United States are hardly expected in the Soviet Union. But the fact is, Soviet green movements are baring their teeth and closing down chemical and neutralization facilities in increasing numbers'' (Chemical & Engineering News, 1990, p. 18).

The Wall Street Journal reported that, "In Russia, every aspect of destruction--- from how to do it, to how to pay for it, from who should do it to where it should be done---is embroiled in debate'' (*Wall Street Journal*, February 25, 1993, p. A-6, Col. 2). Changes in the social structure brought about by *perestroika* have severely impacted the State's ability to implement any plans regarding the destruction of both chemical and nuclear weapons. As one Russian Parliamentrian complained, "We can't make any decisions now without the consent of the locals...We underestimated the changes in society and the role of the mass media, so we didn't pay enough attention to the people'' (*Wall Street Journal*, February 25, 1993, p. A-6, col. 2). The lastest government plan for the destruction of chemical weapons is running into a similar minefield of opposition, according to observers of the Russian scene. "Even before the Russian Parliament began debating the plan last month, the legislature in Chuvash rejected a destruction facility on its territory,'' writes House and Revzin (*Wall Street Journal*, February 25, 1993, p. A-6). The success of grassroots efforts to halt destruction technology in the former Soviet Union does pose questions worth pondering: Is not the Jeffersonian

ideal of 'government by the people' more alive now in the former Soviet Union than perhaps in the United States which advertises itself as a democracy? Will the government of the United States learn from them and accede to the will of the people, or, will the Russians learn from our government how to quell citizen uprisings through co-optation and propaganda?

3.17 Hawaiian Islanders oppose Kalama Island (JACADS) facility.

"Remoteness is Just a State of Mind," so said the delegates from Hawaii, members of the Chemical Weapons Working Group, the group of citizens who met in 1992 in Richmond, KY. to share ideas and exchange information about the Army's Chemical Stockpile Disposal Program. Johnston Atoll (otherwise known as Kalama Island), which lies 2,109 nautical miles from San Francisco and 717 nautical miles southwest of the Hawaiian Island chain, is home to the U.S. Army's first fully-operational chemical weapons disposal facility---JACADS---the Johnston Atoll Chemical Agent Disposal Facility, which has been conducting Operational Verification Testing (OVT) on chemical weapons since 1990. However, to the peoples of the Pacific Region, Johnston Atoll is in <u>their</u> backyard, and they are quick to point out that the U.S. military's insouciance regarding their complaints about being the dumping ground for every conceivable military toxic waste is now legendary. "The Army has not been truthful or forthcoming and have covered over their decision with jargon," the Hawaiian delegate said.

But the JACADS facility is not the first insult to the environment perpetrated by the U.S. military on Johnston Atoll. During the Second World War, the island was reportedly used as a nuclear test site, and, according to

Greenpeace, Johnston Island has also been the site of the *accidental* sinking of nuclear weapons (Greenpeace Pacific Campaign map 1989). After the Second World War, the atoll played an important role in testing and storing American chemical weapons. Some 300,000 artillery shells containing nerve and mustard gas have been kept there since 1971 (*New York Times*, July 27, 1990). The island is very small---only 3,000 feet by 600 feet. It remained unclaimed until 1858 when C. J. Johnston, a British mariner discovered it along with another tiny sister island in a semi-circular coral reef. The atoll has been designated a national wildlife refuge and is operated by the Defense Nuclear Agency and the Department of the Interior. The island is uninhabited, save for the Army personnel who work at the $240 million dollar incinerator facility complex; however, this does not mean that the surrounding marine environment and the people of the surrounding islands are not affected by what goes on there (Ember 1990).

In theory, U.S. bases abroad are required to meet the environmental standards of stateside installations. However, in reality, no U.S. or foreign agency has the authority to enforce or even monitor the environmental compliance at U.S. installations lcoated outside of the United States. U.S. bases abroad are governed by status of forces agreements with each host country, and those agreements say little about environmental protection (Seigel et al, 1991). Greenpeace has long been at the forefront of a campaign to make the U.S. military accountable for its actions in the Pacific. Since 1971, Greenpeace has been actively working with the peoples in the region to create a nuclear-free, pollution-free Pacific.

The Army has turned a deaf ear to the pleas from the people of the Pacific Region for a moratorium on activities at Johnston Atoll. The latest

insult stems from the U. S. Department of Defense's planned shipment of the U.S. stockpile of chemical weapons stored in the Republic of West Germany. A representative from the Office of Hawaiian Affairs wrote, "It is an affront to Pacific peoples that there has been no consultation about this U.S.-West German agreement. Among others, the government of Micronesia (as reported by Hawaii Public Radio Pacific Islands News) strongly condemned the unilateral decision by the United States Government to destroy these highly dangerous substances in the Pacific without consulting Pacific peoples. This is a very heavy-handed colonial attitude and undermines any overtures towards trust and equality in establishing democracies in the Pacific'' (*Akaka* 1990, p.1,2).

The term 'subaltern classes' used by Spivak (no date) when referring to the peoples of the Third World, applies to the inhabitants of the Pacific Islands. She asks, 'Can the Subaltern Speak'? and answers in the negative--- 'the subaltern cannot speak' (Spivak, no date), because Western forms of discourse (and this includes the Military) construe these people as "other'' with all the attendant negative baggage that entails. The end result is not to take them seriously and to trivialize and marginalize their concerns. They are the victims of a virulent form of white racist imperialism and technocratic colonialism.

3.18 Countermovement Activity (The Backlash)

No chronicling of the history of the citizen opposition to the Chemical Stockpile Disposal Program would be complete without a look at the backlash that erupted. Mottl (1980) argues that the analysis of *reaction,* as an ineluctable part of social conflict and change, has not received sufficient analytical treatment in the social movements literature. She defines a

countermovement as a particular kind of protest movement which is a response to the social change advocated by an initial movement. As stated earlier, citizen opposition movements *against* incineration at the various depot sites have been gaining momentum and strength; therefore, it is not surprising that a reaction should occur, particularly in view of the fact that many of the communities adjacent to the storage sites could be described as "Army towns," in which citizens are linked both economically and ideologically to the existence of the depot.

The first indication of what could be termed "countermovement activity" occurred at LBAD (Kentucky) in the winter of 1992. Several "Letters to the Editor" began appearing in local newspapers in and around the Berea/Richmond/Lexington area supporting the Army's incineration plan. Often, these letters were signed by retired Army people or retired depot workers. Members of Common Ground/KEF and Concerned Citizens responded to these editorials once they began appearing. Keeping up with this type of work is extremely tedious and yet it is important to keep the issue before the people. Unfortunately, many of these letters were relying heavily on "facts" supplied by the Army, and as with all propaganda, were filled with half-truths often mouthing the Army's own standard legitimations for the program, stressing the safety of incineration and the alleged dangers of continued storage (e.g. see "Letters to the Editor," *Berea Citizen*, February 27, 1992)

In terms of collective countermovement activity, Anniston Army Depot (ANAD) seems to be the first site where an *organized* group effort has evolved in support of the Army. Although we have described this group in

great detail in a previous section, it may be useful to examine the phenomena further within the context social movements theory.

Mottl (1980) argues that "movements and countermovements ought to be seen as elements of common social processes of collective action centering on reform" (Mottl 1980, p. 620). This implies a dialectical relationship, and indeed, such an analysis can be justified when looking at the "movement/countermovement" activity with regard to the Army's CSDP. Mottl (1980) outlines several postulates thought to describe countermovements. According to Mottl (1980), movements challenge groups higher up in the stratification hierarchy, while countermovements are oriented against challenges from below. This can be readily demonstrated with respect to the Anniston Army Depot groups "Families Concerned About Nerve Gas Incineration" and "Citizens for SPRING." Opponents of the Army's plan (i.e., "Families") generally try to influence Congress and sometimes even the Pentagon in their efforts to halt incineration; whereas SPRING directs its efforts to citizens in the communities at large in an effort to "prevent" the opposition from stopping the construction of the incinerator, which they believe would mean loss of jobs in the community and which would set a dangerous precedent for Army/Community relations. Additionally, Army *prestige* in the community is being challenged by the opposition forces, and with it, the status of military personnel. This challenge goes against the grain in this historically "Army" town. Since the leader of the countermovement in Anniston comes from the military, we might analyze this as a form of *status politics*. An entire literature on "status politics" has emerged to explain how such threatened groups defend their "*lifestyles*" (Gusfield 1963; Zurcher et al 1971; Page and Clelland 1978). Ferree

and Miller (1979). argue that 'a definitive feature of countermovements is the use of a single idea as an ideological lever for the mobilization of disparate constituents to preserve the status quo '(Mottl 1980, p. 621). The ideological lever used by the countermovement at Anniston is the all-too- familiar one which exaggerates the dangers of continued storage while insisting that incineration is the only viable alternative. They have also cleverly played on people's fears about chemical weapons being transported to Anniston from other sites. "Citizens for SPRING Agree that ANAD Should Not Become a Regional Disposal Site. We Don't Want Other States' Stockpiles!" proclaims their newsletter. This is a theme which resonates well within the community and is a salient rallying point. Not surprisingly, SPRING enjoys the wholehearted endorsement of the depot commander who once said in an interview, "Take away incineration and it could take the Army anywhere from eight to fifteen years to come up with another means to destroy its chemical weapons. . .the risk of storage is far greater than the risk of incineration" (*The Anniston Star*, August 21, 1992). As the opposition movement continues to grow, we can expect to see more of this type of activity develop at other sites.

3.19 Movement Update

What began in Kentucky in 1984, as a small grass-roots effort of a few committed activists, has grown continuously throughout the decade to include all eight sites. Since 1991, the movement has gained momentum. Tooele, Utah has two groups who oppose the current incineration plan. Pine Bluff Arsenal now has a very vocal, organized opposition group with a steering committee of at least twelve. Maryland has two very strong groups and is in the process of drafting restrictive permitting regulations similar to

Kentucky and Indiana. A second opposition group has formed in Colorado--"Citizens for Safe Weapons Disposal." Alabama's opposition to the nerve-gas incinerator is growing and legal action is being considered by ANAD incineration opponents because, according to charges, the Army violated NEPA and RCRA regulations by beginning site preparations at the Anniston site without a permit. In addition, construction of the incinerator facility at that site, will be delayed at least 15 months after House-Senate negotiators barred spending for the project in September of 1992. *The Anniston Star* reported that "the ANAD provision is one of several congressional proposals that could further hobble the controversial incineration program" (*The Anniston Star*, September 9, 1992, p. 1). Not only have several new groups formed, but the political climate has shifted somewhat in the direction of the anti-incineration camp. According to the *New York Times* (5/18/93), "the Clinton Administration plans to bar the development of new hazardous waste incinerators for 18 months." Additionally, both Kentucky and Indiana have now passed very restrictive laws regarding hazardous waste incinerators' stack emissions. According to an article which appeared in *The Village Voice*::

> The law, passed by the Kentucky General Assembly 32-0 in March of 1992, requires the Army to show that 'no alternative method of treatment or disposal, including, but not limited to, neutralization and transportation to a less populated site, exists that creates less risk of release or harm to the public or the environment.' (*The Village Voice*, October 6, 1992, p. 18)

The law requires the Army to prove its process would destroy 99.9999 percent of the material burned, making it difficult to obtain the necessary permits to begin construction. Indiana has passed similarly restrictive laws

concerning stack emissions; other states have similar plans. A further piece of legislation that bears on the CSDP is the Federal Facilities Compliance Act (FFCA) signed by President Bush in 1992. Within two years of its signing, the law stipulates that federal facilities (such as the Lexington Bluegrass Army Depot et al) will be regulated by the same environmental compliance laws as U. S. private industry. This is significant, because up until this time, federal facilities have been exempt from federal environmental laws. However, the Army has said it will "voluntarily" comply with existing state and federal laws. Up until now, there has been no way to enforce such regulations. Now there will be. The most recent development involves the Defense Authorization Act of 1993 which requires the Army to certify that on-site incineration is indeed the safest method of disposal after seriously considering alternatives. The reports are due later this year (1994).

Nevertheless, despite the apparent successes of the opposition, the Army's incineration plan for the destruction of the U. S. stockpile of unitary, chemical weapons marches inexorably onward. While citizen groups may be able to forestall deployment of incinerators at one or two of the sites, the Army's Implementation Schedule (see Appendix D) gives no indication that a shift away from incineration is in the offing. Indeed, the Army is not bound to take the advice of the studies commissioned to investigate alternative technologies. In a letter to the Director of the Kentucky Environmental Foundation, a representative from the Pacific Studies Center argues that, "The problem is that the Army would consider any change in technology to be an admission of error. Thus, it has a bureaucratic imperative to recommend against alternatives" (Letter from Lenny Seigel, Pacific Studies Center to Executive Director, KEF, Inc. 8/27/92). But the struggle is far from

over, and as of this writing, (May 1995) there is evidence that the opposition movement may be gaining supporters in Congress.

3.20 Summary and Conclusion:

In terms of the grassroots opposition movement that began in Kentucky, indigenous social networks played an important role, not only in mobilizing people against the CSDP but in sustaining an effective level of insurgency throughout the many long years of organizing on the issue. In the language of the leading theoretical paradigm for analyzing social movements, the Resource Mobilization perspective (McCarthy and Zald 1982; Gamson, 1968; Gerlach and Hines 1970; Heberle 1951; Klandermans and Oegema 1987; Morris 1981; Walsh and Warland 1983; Cable, Walsh and Warland 1988; Aveni, 1978) the local social justice organizations in Berea and the closeknit network of friends and business acquaintences in the respective communities provided both a basis for social action and the necessary indigenous resources to carry out effective insurgency. The groups recruited from different social networks, thus adding strength and diversity to an already well-established tradition of political action. While these are not fundamentally "charismatic" movements, charismatic leaders do play an important role in this movement. Their penchant for coalition building and their abilitly to develop effective strategies to counter the Army rhetoric spewing out of the Pentagon Public Relations offices, appears to have contributed to their success as well.

In conclusion, a fitting slogan for the citizen-led opposition effort comes from the words of one of Concerned Citizens leading spokesman,

quoting Marshall Foch, the French General who said, "We fought to the end, and then we fought beyond the end of the end.''

Chapter 4

The Second Face of Power: NEPA, The Army, and the Myth of Public Participation

'But the people were given the immense satisfaction of having been consulted, of having been given a chance to debate, of having --- so it seemed to them --- their opinions solicited and weighed. This is the democratic appearance that no authoritrian government can do without.

Jacques Ellul 1965. *Propaganda: The Formation of Men's Attitudes*

4.1 NEPA: The National Environmental Policy Act of 1969

4.1.1 Background

The late sixties and early seventies were a time of unprecedented heightened public awareness about environmental issues. Indicative of this new consciousness was the celebration of EARTH DAY (April 22, 1970), which drew two hundred fifty thousand people to Washington D.C. and involved "teach-ins'' and speeches all over the country all united "in what amounted to be the equivalent of a national town meeting on America's environmental future'' (Manes 1990, p.45). Commenting on EARTH DAY, Christopher Manes (1990) wrote, "Even in a time of mass protests against the Vietnam War and racial injustice, Earth Day represented an impressive display of public support for a political ideal---the preservation of America's deteriorating environment'' (Manes 1990, p.45). Riding this crest of popular support for the preservation of the environment, the last few years of the 1960s, and the following decade of the seventies, ushered in remarkable successes for environmentalists both in the legal and political arena (Manes 1990). Several new laws affecting the environment were passed, e.g., The Clean Air Act 1970, The Clean Water Act 1972, The National Toxics Control

Act 1976, and The Resource Conservation and Recovery Act {RCRA} 1976. First and foremost among these new legislative initiatives was the law for the protection of the environment known as NEPA---*The National Environmental Policy Act of 1969* (Public Law 91-190 as amended). Signed by President Nixon on January 1, 1970, the Act was hailed as *the* answer to our environmental woes and characterized as "A comprehensive 'national charter for protection of the environment'"(Hunscher 1983, p. 336). At last the country was facing up to its obligations to live in harmony with the planet.

Caldwell (1979) argues that by the late 1960s there was widespread belief among environmentally concerned and politically active citizens that federal agencies and programs were themselves leading factors in environmental degradation. He argues that "Environmental issues had pitted organized citizen groups against governmental agencies responding primarily to what their critics perceived as relatively short-term and narrowly defined economic interests" (Caldwell 1979, p. 1). The National Environmental Policy Act (1969), for better or for worse, was going to change the way federal agencies dealt with the environment---or so it seemed.

4.1.2 The NEPA Review Process: An Overview

The first step in the NEPA review process for an action for which an EIS is required is the publication of a *Notice of Intent* in the *Federal Register*. This notice states how scoping (the public involvement process) will be started. The preparer of an EIS can be a federal agency, a state agency or local agency in conjunction with a federal agency (such as a state DOT), or a third party contractor, such as a national laboratory. After the public notice appears

in the *Federal Register*, meetings are held to determine the major issues to be addressed; then a DRAFT Environmental Impact Statement (EIS) is prepared. This is normally followed by a 45-day public comment period. Comments are submitted and all substantial concerns are supposed to be addressed. A FINAL EIS is then published followed by a Notice of Availability (NOA) which appears in the *Federal Register*. There is a review period of 30 days before the Record of Decision (ROD) is published. The ROD includes mitigation obligation and is the decision on the action (Bear 1987). Under certain circumstances, for example, heightened public scrutiny and concern, or if potential for extreme danger to publics exists, then a supplemental EIS is often required. There are exceptions to these rules; however, we will not go into those at this point.

NEPA has been fraught with misunderstanding and controversy; therefore it is important to understand the limitations of the Act---what it is not. According to Lynton Caldwell, a leading expert on the law:

> NEPA is not *primarily* (a) a full disclosure law; (b) a vehicle for citizen involvement; or (c) a regulation of agency procedures. The Act contributes importantly to each of these objectives, but they are incidental to its main purpose and none were primary reasons for its enactment. NEPA is what its title declares: *a policy act.* Its purpose was to state for the first time and in a single place, *a comprehensive national commitment to protection of the environment* and to back up that commitment with a corresponding reorientation of specific policies and programs of the administrative agencies of the United States government (Caldwell 1979, p. 1).

Because it is strictly a *policy act*, it lacks enforcement mechanisms and is therefore subject to widespread misunderstanding and diverse interpretation, if not outright abuse by powerful vested interests who then make a fetish of complying with the procedural requirements as mandated by the Council on Environmental Quality. Commenting on NEPA'a lack of enforcement mechanisms, one activist remarked:

> NEPA says that out of concern for the environment people must have input Overall, it is without teeth. Yes, the input is there, but there is nothing there to make *{the Army live up to its obligations}.*

In addition to preparing environmental impact statements, NEPA called on the lead agency to consult with and obtain comments from any other federal agency possessing jurisdiction or having special expertise with respect to the environmental impacts involved in the proposed action. These agencies are referred to as "cooperating agencies." Cooperating agencies for the CSDP include the Department of Health and Human Services (DHHS), the Environmental Protection Agency (EPA), the Federal Emergency Management Agency (FEMA), as well as innumerable state and local agencies involved in the process of emergency response. The purpose of requiring input from cooperating agencies is to reduce agency bias or "tunnel vision," as well as to balance the differing goals of federal agencies and meet the Act's overall goals of protecting and enhancing ecological values (Wilson 1987).

4.1.3 CEQ: The President's Council on Environmental Quality (CEQ)

The agency created to implement NEPA and to create regulations and procedures is the President's Council on Environmental Quality (CEQ). Section 202, Title II of the Act states that: "There is created in the Executive

Office of the President a Council on Environmental Quality (hereinafter referred to as the "Council")" (Bregman 1992, p. 203). The functions of the Council shall be as follows: (1) Assist the President by preparing an Environmental Quality Report; (2) gather timely, authoritative information concerning the conditions and trends in the quality of the environment; (3) review and appraise the various programs and activities of the Federal Government in light of Title I of the Act; (4) develop and recommend national policies to foster the improvement of the environment; (5) document and define changes in the natural environment, etc. (Bregman 1992).

The Council's role is a coordinating one; it is not a commenting agency in the sense that its comments are attached to impact statements. Thus, no inference of approval or disapproval can be drawn from CEQ's failure to comment on either draft or final statements. In short, the CEQ is responsible for setting up policies and procedures that federal agencies must comply with in regard to NEPA. As long as a statement is made available to CEQ, that agency will be able to fulfill its role of internal adviser to the Executive Branch and to the President as outlined by NEPA (EPA 1976).

Among other things, the CEQ is responsible for setting up guidelines regarding the preparation of NEPA documents and has suggested that agencies take steps to reduce excessive paper work as well as reduce delays. Specifically, they encourage agencies to "integrate the NEPA process with other planning at the earliest possible time to insure that planning and decisions reflect environmental values, to avoid delays later in the process and to head off potential conflicts" (Bregman 1992, p. 215).

4.1.4 The E.I.S (Environmental Impact Statement)

The backbone of NEPA is the now-infamous Environmental Impact Statement, commonly referred to as an "E.I.S." NEPA was designed to basically answer the question, "What is the impact of the planned project and how can it be minimized" (Bregman 1992, p. 2)? The Environmental Impact Statement or EIS, is designed to help answer this question. The idea for such a document came from Professor Lynton K. Caldwell of Indiana University at Bloomington. Professor Caldwell has written extensively about NEPA and its ramifications (Caldwell 1977; 1979; 1983; 1988; 1989; 1990).

Each Environmental Impact Statement must include: (1) a detailed description of the proposed action; (2) discussion of the probable impact on the environment; (3) any adverse environmental effects that cannot be avoided and possible mitigation measures; (4) alternatives to the proposed action; (5) an assessment of the cumulative, long-term effects of the proposed action including its relationship to short-term use of the environment versus the environment's long-term productivity (EPA 1976). Not every planned federal project requires an EIS, however. The CEQ has established guidelines so that when there is doubt, entities (also referred to as the "potentially responsible parties") can perform an Environmental Assessment (EA) first. The EA is reviewed by the lead agency and, on occasion, by the U.S. Environmental Protection Agency (EPA). It determines whether there may be negative impacts on the environment, in which case a full EIS is involved. If the EA shows no impacts worth considering, then a Finding of No Significant Impact (FONSI) is published in the *Federal Register*, and the project moves forward (Manes 1992).

Basically, an Environmental Impact Statement is supposed to do exactly what the name implies, and that is, provide input on possible impacts from a given project. According to paper prepared by the Environmental Protection Agency, "NEPA requires each Federal agency to prepare a statement of environmental impact in advance of each major action, recommendation or report on legislation that may *significantly* affect the quality of the human environment" (EPA 1976, p. 1). "The statement's primary purpose," the EPA continues, "is to disclose the environmental consequences of a proposed action, thus alerting the decision-maker, the public and ultimately Congress and the President to the environmental risks involved" (EPA 1976, p. 1). The actions for which federal agencies must prepare impact statements must be both "major" and "significant."

As first conceived, an EIS was to be long enough to discuss the potential impacts of a project comprehensively, but not so long or complex as to preclude understanding by any literate person. The framers envisioned a document of reasonable length. For example, Council on Environmental Quality (CEQ) regulations stipulate page limits on EISs. Section 1502.7 of CEQ regulations reads: "The text of final environmental impact statements (e.g., paragraphs (d) through (g) of 1502.10) shall normally be less than 150 pages and for proposals of unusual scope or complexity shall normally be less than 300 pages" (Bregman 1992, p. 225). However, for a variety of reasons, EIS documents have grown both in complexity and scope to atrocious lengths. The FPEIS for the CSDP includes three volumes and runs to several thousand pages. And this is typical of EISs for major projects at this level of complexity. Caldwell (1977) decries the fact that EISs have grown to such proportions. He once wrote that, "It is regrettably true that the Environmental Impact

Statement has been misused. . .Abuse of the EIS has resulted primarily from either misunderstanding of the Act or from attempts to evade or subvert it" (Caldwell 1977, p. 11). Reflecting on its early history, he added, "No one that was involved in the Act had any idea of what it would become." He observes that "they are putting too much into them." "I don't think you need sixteen documents. Some of that is done deliberately, " he says," to get through the courts. Someone can always say, 'Oh, you forgot this species.'"(Telephone Interview 6/12/92). Bregman (1992) has also commented on the disparity between the ideal and the real use to which EISs are put. He wrote, "Ultimately, of course, it is not better documents but <u>better decisions</u> that count. NEPA's purpose is not to generate paperwork---even excellent paperwork---but to foster excellent action" (Bregman and Mackenthun 1992, p. 215)..

Preparing EIS's has now spawned a brand new growth industry, complete with professional conferences, journals (e.g., *The Journal of EISs*), and the potential for huge profits for professional contractors (for example, national laboratories) who undertake EIS preparation for the government or industry. This "professionalization" has serious implications for citizens who wish to challenge a proposed agency action, not the least of which is the fact that the average citizen seeking to question the efficacy of a particular project often has to contend with mountains of obfuscating quantitative data gathered by "experts" whose paychecks are signed by the entity that plans the project. One contractor, familiar with the inner-workings of preparing EIS's for the Army's CSDP at the Oak Ridge National Laboratory (Oak Ridge, Tennessee), estimated the cost of preparing <u>one</u> EIS at around $1.7 million dollars (Field Notes, ORNL, May 1993).

4.2 Programmatic: The Generic Approach to Environmental Impact Assessment

On July 1, 1986 the Army released the Draft PEIS which outlined their plan to develop a generic approach for the disposal of the weapons, i.e, "programmatic" vs. site specific. (see Executive Summary, p. xv of report, "Chemical Stockpile Disposal Program: In defense of the Programmatic Approach"n.d.). The Army also took the opportunity in the FPEIS to again defend its choice of a "programmatic" approach with statements such as this: "This statement is programmatic rather than site-specific because the proposed action to dispose of the stockpile is both national in scope and involves a number of separate but related activities" (FPEIS 1988, Vol. 1, p. 1-7). "Moreover," the report continues, "the decision to begin the NEPA process on this program with a programmatic statement was made in consultation with the President's Council on Environmental Quality (CEQ) (See Appendix I)" (FPEIS 1988, Vol. 1, p. 1-7). The Associated Press reported that the Army said, "It is a logical step to prepare one environmental impact statement to cover the demilitarization of the entire stockpile" (*Richmond Register*, October 3, 1985). "Translated into plain language", Congressman Hopkins (1986) once remarked,"'Programmatic' means the Army took all eight sites in the United States where chemical weapons are stored, lumped them together, ran them through a computer, hired some consultants to interpret the results, and then hired an expert in double talk and government euphemisms to write a report hardly anyone could read, much less understand" (Testimony, U.S. Rep. Larry Hopkins: Field Hearings before the Investigations Subcommittee, House of Representatives, House Armed Services Committee, July 25, 1986).

The rationale for utilizing a generic approach is spelled out fairly clearly by Gustafson (1985) who spoke at a conference on environmental assessment and waste management. He wrote, "One mechanism for expediting the process without taking any shortcuts or ignoring relevant issues is to prepare programmatic or generic environmental impact statements dealing with key issues. The EIS's could serve as the basis for rule-making which process when complete in essence says: "This is the way things are going to be done, the matter is settled and will not be the subject of further debate or legal action"(Gustafson 1985, p. 60)! The article goes on to describe exactly *how* this process works to preclude from consideration any and all issues which the entity does not want openly discussed by publics. "Site-specific, process specific environmental assessments," he writes, "may then tier from the programmatic and generic EIS's and the results of the rule-making process, thereby identifying the issues which are OPEN FOR DEBATE and negotiation" (Gustafson 1985, p.60). Therefore, the use of a programmatic approach can be deliberately employed to limit public discourse to consideration of what are "safe" issues for power holders.

One of the issues "defined out" by the Army's NEPA process for the CSDP include (among other things) choice of destruction technology. No EIS was ever prepared on the choice of technology to be used. All attempts to have this decision (on-site incineration) reviewed have given rise to innumerable bureaucratic stumbling blocks both legal and "extra legal." We will describe some of these measures in subsequent sections. Briefly, they include the creation of new "institutional barriers," e.g., the Intergovernmental Consultation and Coordination Board (ICCB) and the addition of new steps in the NEPA review process

4.3 Criticisms of NEPA

Criticisms of the Act come from two directions: agencies which must prepare EISs, and citizen groups attempting to penetrate the process. On the one hand, agencies responsible for complying with the procedural requirements of the law charge that "NEPA burdens the agencies with an unreasonable search for alternatives" (Caldwell 1979, p.6), to which Caldwell responds, "The requirement that agencies consider alternatives to proposed action reinforces what should be in any case considered as good planning and budget practice" (Caldwell 1979, p. 6).

Other criticisms of the Act stem from frustration between the *reality* and the *ideal*. Three major criticisms are leveled at NEPA. First and foremost is the charge that it is simply a *procedural* law. To this charge, Caldwell (1979) argues that an agency does not fulfill NEPA's requirements simply by preparing an EIS---"unless the test of adequacy includes agency consideration of the substantive goals declared by Congress, along with the systematic and interdisciplinary balancing of values that the Act requires" (Caldwell 1979, p.4). The second criticism stems from the fact that "the potentially responsible party, " i.e., the entity that proposes the action, is empowered to prepare the environmental impact statement, which is a little like the fox guarding the hen house. A third, and perhaps less obvious weakness is to be found in the operation of the law and that is, the NEPA process, specifically as it relates to the CSDP, acts like a gigantic "filtering" mechanism, similar to the one described by Chomsky (1988) in conjunction with analyzing the effect of media frames on the dissemination of modern forms of propaganda. This filtering system allows for the suppression of certain issues by 'defining them out' while allowing "safe" issues to be

examined. We will describe this process in more detail later in the section dealing with the Final Programmatic Environmental Impact Statement (FPEIS).

4.4 The NEPA Process and the Chemical Stockpile Disposal Program

The Army's NEPA process for the Chemical Stockpile Disposal Program resembles the Hydra, the many-headed monster of Greek mythology, slain by Hercules. Each head of which when cut off was replaced by two others. The dictionary metaphorically refers to the Hydra as "a multifarious evil not to be overcome by a single effort" (Webster's Seventh New Collegiate Dictionary 1965, p. 406). The likeness is most apt when speaking about the Army's NEPA compliance (or "non-compliance") for the Chemical Stockpile Disposal Program. Every time citizens thought they had been able to keep the Army's moves in check, the Army would bring forth yet another obstacle, create another esoteric institution (e. g., the Intergovernmental Consultation and Consulting Board-ICCB) or invent new steps in the NEPA process, i. e., PHASE I and PHASE II Site Specific EISs. All these steps are designed to retard and/or impede any real progress on the issues citizens raised; all are designed to maintain the status quo.

The Army's NEPA process for the CSDP actually began with versions of disposal programs that predated the Congressionally mandated CSDP (Carnes 1989). In 1984, the U. S. Toxic Hazardous Materials Agency, the predecessor to the Program Manager for Chemical Demilitarization or PM Cml Demil, published a Notice of Intent (NOI) in the *Federal Register* to prepare an EIS related to the disposal of M55 rockets stored at three installations: Lexington-Bluegrass Army Depot (LBAD), Anniston Army

Depot (ANAD), and Umatilla Depot Activity (UMDA). Scoping meetings were held in the respective towns adjacent to these facilities. In April of 1985, the Army's NEPA activities were redirected to include two additional installations storing M55 rockets: Pine Bluff Arsenal (PBA) and Tooele Army Depot (TEAD) (Carnes 1989). By the time Congress came around to mandating the destruction of the entire stockpile, the Army was well rehearsed in NEPA regulations.

As with all NEPA projects requiring an EIS, the first step is the publication of a Notice of Intent (NOI) in the *Federal Register*. Consistent with this requirement, In January 1986, the Army published a Notice of Intent to prepare an Environmental Impact Statement (EIS) for the disposal of the total chemical warfare stockpile currently in storage at eight Army installations within the continental U. S. Next a draft report was prepared. The Army selected the Oak Ridge National Laboratory (Oak Ridge, Tennessee) as the prime contractor to prepare the EIS documentation for the CSDP, although other subcontractors assisted in collecting data (e.g., S.E. Technologies).

4.4.1 DPEIS: The Draft Programmatic Environmental Impact Statement (DPEIS)

The first NEPA documentation to be released was the DPEIS (July 1, 1986). The normal 45-day public comment period was extended (July 1-September 23) to two full months because of the high level of public concern with the program. The DPEIS considered the following options: (a) continued storage; (b) on-site disposal; and (c) off-site transportation of the stockpile (Carnes 1989).

Almost from the day of its release, the DPEIS came under heavy criticism. After reviewing the document, a staff attorney for the Kentucky Resource Council, said the document was riddled with "conceptual flaws and informational gaps." He went on to charge that "The Army has not complied facially or substantively with the requirements of NEPA" (*Richmond Register*, August 29, 1986), and suggested that the environmental scoping process now under way for the program be abandoned because it was "so flawed that it is impossible to patch it up" (*Richmond Register*, August 29, 1986, continued from page 1).

Citizens in Madison County were up in arms. *The Richmond Register* reported: "Madison Countians who spoke at the environmental scoping meeting which Ambrose opened made the situation even more disagreeable for the Army launching a fusillade of criticisms at the Army-prepared Draft Environmental Impact Statement. Many called the document 'fatally flawed'" (*Richmond Register*, August 29, 1986, p. 5). First and foremost among the criticisms leveled at the Army with respect to the DPEIS had to do with the choice of a "programmatic" vs. a site-specific approach and particularly the generic nature of the risk assessments. In his criticism of the DPEIS, Senator Wendall Ford said, in a letter to the House Armed Services Committee, "This one-size-fits-all attitude of the Draft Environmental Impact Statement just doesn't work" (Letter, Senator Wendall Ford to House Armed Services Committee, July 22, 1986). In defending the programmatic approach, the Army said that the Council on Environmental Quality (CEQ) advised them that a programmatic approach (i. e., a programmatic EIS and a Record Of Decision followed by site-specific environmental assessments or environmental impact statements) was the appropriate approach to ensure

full compliance with NEPA (U.S. Army: CSDP Public Hearings, no date, p. 3).

In evaluating the choice of using a generic approach preparers of the DPEIS at the Oak Ridge National Laboratory admitted its shortcomings. One person wrote, "The generic approach adopted for the DPEIS did not work. . .The risk analysis information bordered on being incomprehensible; . . .There was no defensible reason why relocation of a part of the stockpile (i.e., from some installations but not others) was not viable" (Carnes 1989, p. 441). Additional criticism stemmed from the fact that the risk assessments dealt with highly unlikely scenarios, e.g., lightening striking the igloos, rather than focusing on the much more likely possibility of an accident resulting from normal operations. Additionally, it was argued that there was little discussion about the risks to human health and the environment posed by incineration *per se*, and no discussion of *cumulative impacts* of long-term incineration, although consideration of cumulative impacts is required by NEPA regulations. Other criticisms were raised with respect to the Army's use of a destruction efficiency concept---the famous "six nines." This referred to the Army's assertion that the incinerators would burn nerve and mustard agent at an efficiency level of 99.9999% ("six 9's")---a near impossible standard even under ideal conditions. Unfortunately, destruction and removal efficiencies (DREs) are not measured during actual, routine operations, but are determined during a one-time only "trial burn" (GREENPEACE Toxics, "N.d"). The EPA Science Advisory Board (1985) expressed concern on this issue as follows:

> Research on the performance has occurred only under optimal burn conditions and sampling has, on occasion, been discontinued during upset conditions which take place with unknown frequency. Even relatively short-term operation of

> incinerators in upset conditions can greatly increase the total incinerator emitted loadings to the environment.

Finally, it was charged that the DRAFT Programmatic Environmental Impact Statement (DPEIS) summarily rejected consideration of alternative destruction technologies referring back to the NRC (1984) report in support of incineration. All in all, the Army's presentation of the DRAFT document for the Chemical Stockpile Disposal Program (DPEIS) was a flash point for the monumental political struggle and cat-and-mouse game between the Army and the citizen opposition that is the centerpiece of this research.

4.4.2 FPEIS: The Final Programmatic Environmental Impact Statement

The Final Programmatic Environmental Impact Statement (FPEIS) was released on December 30, 1987, and in January 1988 public hearings were held in Edgewood, MD; Newport, IN; and Richmond, KY. This document was supposed to answer the criticisms raised in the DPEIS and set the stage for further development of the CSDP. Shortly after the release of the FPEIS, and consistent with NEPA procedure, Secretary Ambrose issued a Record of Decision (ROD) {February 26, 1988} stipulating on-site disposal of the stockpile. The Army identified its "Preferred Alternative" which was also listed as the environmentally preferred alternative---the on-site disposal option (FPEIS 1988, Vol. 1, p. xviii). The document, which ran to three volumes and several thousand pages, attempted to address the major criticisms leveled at the Draft EIS; and hence contained reference to "expanded" transportation studies (see MITRE Corporation 1987). The FPEIS carefully laid out the "alternatives" it weighed in selecting its "Preferred Alternative," they included: (1) Continued storage of the stockpile at each

existing storage location; (2) the on-site disposal alternative; (3) regional disposal centers located at ANAD and TEAD; (3) national disposal center located at TEAD; (4) partial relocation. "For each of the program disposal alternatives, the disposal technology would be the same as is to be employed at a facility under construction by the Army at Johnston Atoll where incineration in separate furnaces is to be used for agent destruction, explosive and propellent destruction, metal decontamination , and dunnage disposal" (FPEIS 1988, Vol. 1, p. xiii). In defending their decision to go with thermal destruction, the Army once again fell back on the 1984 NRC report. The FPEIS states, "Incineration is endorsed by the National Research Council as the best and safest method for destroying chemical agents" (FPEIS 1988, Vol. 1, p. xiii).

In supporting the validity of the FPEIS, the Army declared that, "This document is supported by site visits by the authors (see Sect. 6) to each CONUS installation and its environs, meetings with citizens and consultations with local, state, and federal agencies (see Table 1.3.1 FPEIS), literature searches, and numerous studies prepared since publication of the DPEIS" (FPEIS 1988, Vol. 1, p. 1-11). More often than not, site visits turned out to be one-day affairs where Army personnel flew in, toured the depot and flew out. In short, data gathered from these types of "site visits" is questionable at best and is perceived as just "going through the motions."

Although the FPEIS outlined both the venue for the destruction of the weapons and the technology to be used, no EIS was ever prepared on the choice of technology. The discussion of "alternatives" is a most interesting one for two reasons: First, NEPA requires consideration of alternative modes of action, in fact, the heart of NEPA is comparison of alternatives. Second,

although the Army has carefully laid out "alternatives" (see Table C-6 FPEIS) they have avoided the issue of alternative *technologies* , dismissing out of hand any method other than incineration. As stated earlier, the Army did not prepare an EIS on the *choice* of technology, although there is every indication that not doing so violates at least the spirit of NEPA. Bregman (1992) describes how the process is *supposed* to work:

> After a review of the information in an EIS concerning the various alternatives, an intelligent decision concerning how to proceed can be made. Most of the time, the Preferred Alternative is selected, but mitigating measures are applied to minimize negative environmental effects. . .On occasion (perhaps 5% of the time), one of the other alternatives is selected to replace the Preferred Alternative. In rare instances, the Do Nothing alternative prevails and no action is taken (Bregman 1992, p. 2).

In the case of the CSDP, we aver that the "decision" regarding the choice of technology was made prior to the publication of the FPEIS and even prior to the publication of the DPEIS, thus leaving the door wide open to the charge that the Army had successfully subverted the NEPA process to its own advantage. NEPA practices and procedures, while appearing to be dynamic components of social change, are in fact, mere pillars of the status quo.

4.4.3 SSEIS: The Site-Specific Environmental Impact Statement (SSEIS): The Evolution of a 'Nondecision'

No single issue has caused more rancor or provided a clearer window on the processes of power than the Army's refusal to conduct site-specific studies consistent with the expressed wishes of concerned citizens and state and local government officials. The odyssey began in 1986 with the release of the DRAFT PEIS and continues to the present time. One citizen-activist

offered this opinion on the subject: "The Army has compromised itself on this issue. If I were going to have any moral indignation at all, it's about this issue."

If, as Gaventa (1980) argues, *non-decisions-* (i. e., what is not done because of institutional inertia or neglect) must be considered a form of power, then the issue of the SSEIS is the quintessential example of *non-decision. making.* Bachrach and Baratz (1970) in *Power and Poverty* , define a '*non-decision*' as:

> A decision that results in suppression or thwarting of a latent or manifest challenge to the values or interests of the decision maker. To be more nearly explicit, nondecision-making is a means by which demands for change in the existing allocation of benefits and privileges in the community can be suffocated before they are voiced, or kept covert; or killed before they gain access to the relevent decision-making arena; or, failing all of these things, maimed or destroyed in the decision-implementing stage of the policy process. (Bachrach and Baratz 1970, p. 43).

To say that the Army has equivocated on the subject of site specific studies is to be truly kind. The folly of placing a nerve-gas incinerator at Lexington-Bluegrass Army Depot amid such a densely populated area (or at Aberdeen Proving Ground---also densely populated) and within one mile of an elementary school, seemed self-evident to everyone---except the Army. Opponents were certain that if the Army came down and did a careful examination of the site, (i.e., a "site-specific study") they would realize that the decision to burn the weapons on site was ludicrous---if not downright dangerous. Commenting on the Army's grudging compliance with the community's request, an activist remarked, "ORNL (i. e. the Oak Ridge National Laboratory) did slipshod work. They didn't come here and look at

our site. They came here for a half day. We've asked and Ambrose promised they would do an on-site study.''

The subject of a site-specific study was first raised at a public meeting held in Richmond, KY. January of 1986 where U. S. Congressman Larry Hopkins is reported to have said in answer to a query from a concerned citizen about the generic nature of the DRAFT document: "Let me, if I may, this morning, for the benefit of some of you who may not have been here, we were able to glean from the Army this morning a commitment now on the record and to this panel that they would give to us an on-site environmental impact statement'' (Transcript of Field Hearings: 1986, p. 211).

At a subsequent public meeting held in May of 1986, the Army emphasized that a decision had not been reached on the ultimate disposition of the weapons. They (the Army) indicated that once a decision was reached, they could be "flexible'' and would still be able to treat each site as an individual case. The Army has continually held out the "carrot'' that it might alter the programmatic decision if a certain set of circumstances proves different from the assumptions that underlay the EIS. For example, the Army stated, "The Programmatic EIS that is being prepared will offer the Secretary of the Army the flexibility to make alternative decisions based on the variability of the problems of the eight sites. . . For instance, it would be possible for the Secretary of the Army to make one decision for one site or one class of sites and a different decision for another class of sites'' (U. S. Army, Transcripts of Public Meeting, May 1986, Richmond, KY, p. 112,113). To the uninitiated, this statement seems clear enough. It seems to be saying that it is possible for one site to have on-site incineration while another site

has their weapons transported out. And that certainly is how the citizens of Madison County interpreted it.

Basking in the Army's assurances, the people of Madison County, Kentucky were, if not euphoric, guardedly optimistic. The local newspapers ran a spate of articles detailing this sea of optimism. For example, *The Richmond Register* ran a story which read: "As you know, the Army has agreed to prepare a Site-Specific Environmental Impact Statement (SSEIS) on the effects of an incinerator here in Madison County" (July 28, 1986, p. 4). U.S. Representative Larry Hopkins who had called for the field hearing in Madison County called it "a crucial breakthrough for us." Later, he was quoted as saying the Army's announcement to do a site specific study was like "a new lease on life" for the area. (*Lexington-Herald Leader*, July 30, 1986). Later in the summer another article appeared which echoed similar optimism: "The Army has said that information gathered during the public comment period could influence the Army to choose one of the rejected alternatives or some combination of alternatives" (*Richmond Register*, 8/27/86, p. 12). However, this optimism was short-lived as it became apparent that something quite different from what they had come to expect was taking place. The first blow came at a public hearing held by the Army in Richmond, Kentucky. The penultimate obfuscation came from one of the Army's EIS preparers who explained the Site Specific EIS process for the CSDP:

> If he (i.e., the Secretary of the Army) makes, say two alternative decisions based on some collection of variables: population density, ecologically sensitive areas, human health, those kinds of variables, there would then be, as required by NEPA and CEQ,. . .regulations and interpretations of those regulations that are requirements for a site specific NEPA

> document and that document would address how the particular decision for that particular installation would be implemented. . .
> (Carnes, U. S. Army Transcript of Public Meeting, Richmond, KY. May 1986, p. 113).

He went on to explain, "If it is determined . . .that the decision is a {sic} on site disposal, the site specific NEPA document would look at how that particular alternative would be implemented and what is the best way of going about doing that'' (Transcript, May 1986 Public Scoping Meeting for the CSDP: Richmond, KY. ,p. 113). In other words, site-specific studies would turn out to be collecting information (i.e. new data) which would facilitate the implementation of the Record of Decision (ROD) whatever that may be. In the case of the CSDP, it would answer the question of where would be the best place to site the facility on the depot (i.e. which parcel of land among the 15,000 acres of LBAD would be best suited for the incinerator facility), not *whether* on-site incineration was the best choice for this particular site.

In the course of the public scoping meeting described above, the citizens became aware of the fact that what they were hearing was that the site specific studies were going to come AFTER a decision had been made. This seemed quite illogical to the citizen who posed the question. The exchange went something like this: CITIZEN: "It is possible, as I understand it, that on July 1st we're going to hear, or we might hear, that the Army's preferred solution would be on site incineration at all sites. . .That decision would have been reached without any kind of detailed Environmental Impact Statement from this area. Are we agreed so far? ANSWER: "Yes.''

About this time, the normally conservative *Lexington Herald Leader* ran an editorial expressing doubts that the Army's new initiative would

change the status quo. The article read, "Another nerve gas study won't alter the political reality. . . It's unlikely that yet another study will cause the Army to do an about face on all its previous work...What the Army probably hopes is that the latest study will quell some of the local furor over on-site destruction and strengthen its defense should the issue wind up in court'' (*Lexington-Herald Leader* 8/30/86). That statement proved to be prophetic. As time went by, rumors began surfacing that put the Army's intentions regarding the SSEIS into question. "What we are hearing now is that the Army claims that a site-specific study would be just for the purpose of "implementing'' their decision. In other words, a study would not be in any way a fresh look at our unique problem, but would simply serve to justify their decision'' (*Richmond Register-*. January 26, 1988).

Obviously, the citizens were convinced that an honest appraisal of their particular situation would result in a decision against using incineration and would make the transportation of the weapons out of LBAD more likely. And, indeed, there was good reason for them to believe this. A veritable host of Army generals, Pentagon officials and Army contractors gave every indication that such studies were in the offing---if not immediately, then surely somewhere down the line. Attempts to clarify the Army's position brought further reassurances from the Army that site specific studies would be done. What was not said, but could only be discerned by inference, was that these studies would be done after a decision had been made and not before such decision, as the citizens expected.

The first of these reassurances came from a consultant at the Oak Ridge National Laboratory, the contractor charged with developing the EIS documentation for the CSDP. He said, "I would not be surprised if a site-

specific environmental impact statement would be required for the Lexington-Bluegrass Army Depot''---a curious statement since site-specific studies were already part of the Army's NEPA compliance program (*Richmond Register*, May 6, 1986, p. 1). In July 1986 after the release of the DPEIS, Lewis Walker (Deputy for the Environment, Safety and Occupational Health Office, Office of the Assistant Secretary of the Army for Installations and Logistics: Pentagon) testifying at the House Armed Services Subcommittee on Investigations Field Hearing (Richmond, KY.) said that, "Regardless of the Record of Decision (ROD), the Army will conduct site-specific environmental impact studies in the following circumstances: Where there is heightened public concern or controversy or when the hazards and risks are unique or great''(*Richmond Register*, 7/25/86, p.1). To which Congressman Larry Hopkins replied, "Given these factors, I'm going to assume . . .that a site specific analysis is going to be made here at the Lexington-Bluegrass Army Depot.'' "Yes, we intend to do that here in Lexington,'' Walker replied, adding that "the local depot meets the criteria for a site-specific study'' (*Richmond Register* 7/27/86, p. 1). The Army's "mishandling'' of the truth on the issue of site specific studies goes far beyond mere "waffling'' and, as evidence will show, indicates a rather deliberate attempt to cloud over the issue with jargon designed to mislead citizens into believing they were being heard. Nothing could be further from the truth.

In the following months, the local newspapers were rife with stories of citizen optimism regarding the impending site-specific studies. On September 11, 1986, *The Richmond Register* ran a story on page one which recounted Dr. Oris Blackwell's address to the faculty of Eastern Kentucky University. During the luncheon lecture, Dr. Blackwell said that he was

beginning to sense "some cracks in the armor" of the Army's incineration plans. Blackwell cited recent Army concessions---like its agreement to prepare an environmental impact statement for the local depot---as evidence of the success of area citizens who oppose the construction of an incinerator there. Around that time, The *Lexington-Herald Leader* ran a story that began, "Last month incinerator opponents won an important concession when the Army agreed to commission a "site-specific" study for Madison County if Marsh (then Undersecretary of the Army) decided to build an incinerator there" (*Lexington Herald Leader*, August 1986, p. B-3).

A growing wave of optimism continued throughout 1987. In December 1987, *The Richmond Register* ran this headline: "On-Site Incineration Decision Expected." The story went on to point out that "the decision may not be final in regard to the Richmond depot which has been promised a **site-specific environmental impact study** that would take into consideration economic, environmental, and safety features" (*Richmond Register*, December 1987).

In 1988 the Army put a new spin on the notion of site-specific studies. The discourse changed and the the Army began gradually referring to these studies as part of a "tiering process" tied to the Record of Decision (ROD). Col. Elray Whitehouse, (Commander of the Lexington-Bluegrass Army Depot) speaking to the press, said that the Army was simply following the guidelines set out in the National Environmental Policy Act (1969) that the Site-Specific Environmental Impact Statement be <u>tiered</u> to the original programmatic decision. Army spokesmen stood by their position that "the site-specific study would be a 'tiering' process to implement the Record of Decision," scheduled for around February 13 (*Richmond Register*, 2/2/88, p. 2). This came as a big

surprise to opponents of incineration who were firmly convinced that they were making progress with the Army on the issue relating to the choice of technology while hammering away at the uniqueness of each depot site.

Indeed, according to CEQ regulations (1502.20), agencies are encouraged to tier their environmental impact statements to eliminate repetitive discussions of the same issues and to focus on the actual issues ripe for discussion at each level of environmental review. Bregman (1992) writes that "tiering may also be appropriate for different levels of action" (Bregman 1992 p. 230). Whether CEQ regulations *require* that SSEISs be tied to the Record of Decision (ROD) in the manner described by the Army is another question. This may have come about as a result of Army contractor's tinkering with the NEPA process to make it fit the Army's needs. Army contractors admit to ". . .restructuring the EIS and making revisions associated with the new structure. . ."(Carnes 1989, p. 443).

The fact that the site-specific studies were tied to the Record of Decision (ROD) meant that the long-promised studies would not be done until after a decision had been made on how to dispose of the weapons. Sort of like putting the cart before the horse. In a speech to the Madison County Fiscal Court on January 19, 1988, a prominent member of the community said, "The Army is now calling the site-specific statement a document to implement the programmatic at the local level. "It's just to see how (the Army) is going to put it in. That looks like what's coming down the line" (*Richmond Register* 1/25/88, p. 1).

Throughout 1988, citizens and government officials continued to press the Army for clarification on the status of the site specific studies. For example, on February 3, 1988, Wallace Wilkinson, then Governor of

Kentucky, wrote a letter to Brigadier General Nydam in which he stated, "The Army needs to evaluate site-specific information prior to making a decision'' (Letter: Governor Wilkinson to Brig. Gen. Nydam, February 3, 1988). Additionally, in a four-page critique of the three-volume FPEIS, the Kentucky Natural Resources and Environmental Protection Cabinet wrote: "We would like clarification of the Army's intentions in preparing site-specific NEPA documentation'' (Kentucky Natural Resources Environmental Protection Cabinet, p. 1). During this time, the Army continued to reassure citizens that they were being heard. Speaking to the press, one Army spokesperson said, "I am reaffirming our commitment to do a site-specific environmental impact statement that would relook the impact of the record of decision (ROD) in eminent detail in the Madison County area. . . However, the Army will not examine other alternatives once Undersecretary of the Army James R. Ambrose makes an official decision'' (*Richmond Register* 2/2/88). .

Finally, on April 10, l991, the Department of Defense (DOD) published a Notice of Intent to prepare a Site-Specific Environmental Impact statement on the CSDP. The first step in what was to be a two-stage process was to hold a public scoping meeting. The notice in the Federal Register read: "This announces the Notice of Intent to prepare an SSEIS on the potential impact of the design, construction, operation and closure of the proposed chemical agent demilitarization facility at Lexington-Bluegrass Army Depot, Kentucky. . . Notice is further given of the Army's intention to conduct a scoping meeting to aid in determining the significant issues related to the proposed action at Lexington-Bluegrass Army Depot, as well as Federal, State and local agencies, participation and input are welcome.''(*Federal Registe*r, Vol. 56, No. 69, Wednesday, April 10, l991.)

4.5 PHASE I and PHASE II Site-Specific Environmental Impact Statements (SSEIS)

Normally, the final step in the NEPA process is the preparation of site-specific documents. However, in the case of the CSDP, that process has been divided into two parts or "phases": The Phase I Site Specific EIS (SSEIS) and the Phase II Site Specific EIS (SSEIS). The first stage, the Army explained, would consist of gathering updated and new data at each of the eight sites and comparing that data with the data used for the original programmatic EIS. The second phase of the program would begin when the first phase was completed and would consist of the actual writing of the site-specific documents.

The Army claims to have initiated the two-staged process at the urging of Representative Larry Hopkins, the congressman whose district includes the Lexington-Bluegrass Army Depot. In a letter to Hopkins, John W. Shannon, Assistant Secretary of the Army for installations and logistics wrote, "As a result of several meetings with your staff, the Army has decided to begin a two-phased approach to conducting site-specific environmental documents" (*Richmond Register*, May 12, 1988, p. 1). Commenting on the plan, Hopkins stated, "Although this plan does not provide everything I wanted, it does move the Army away from its initial position of recklessly plowing ahead with its programmatic approach with little regard for site-specific concerns and characteristics" (*Richmond Register*, May 12, 1988, p. 1).

In trying to clarify the rationale behind this approach, the Technical Director for Chemical Demilitarization explained that the purpose of the Phase I Study was to say, "If I knew in 1988 what I know today, would I have made the same decision?" In speaking to the press he explained it this way.

In other words, "During that process, researchers would be continually running a check and balance of the wisdom of the original decision" (*Berea Citizen* 2/4/88, p. 1). At the same time, Army representatives reassured local residents that a site-specific study would closely examine the impact of the Army decision on the local area. However, if the Under Secretary of the Army's Record of Decision (ROD) was on-site disposal, the Phase I Site Specific Study would not revisit the transportation alternative. It would simply be for the purpose of collecting "new" and "updated" data bearing on the implementation of the Record of Decision. The Phase II Site Specific EIS Studies would then deal only with *mitigation strategies* and *disposal facility siting* within the installation boundary. An activist asked General Nydam if the Army would take "a totally fresh look at how the decision would affect Madison County and the surrounding area." "If you're asking if we would be relooking at the transportation aspects of it if the decision were made on-site, the answer is 'no'" (*Berea Citizen* 2/4/88, p. 1). However, the General later added, "Yes, we would take a fresh look at how that decision to build an incinerator on-site would affect Madison County" (*Berea Citizen*, 2/4/88, p. 1).

According to a bulletin board display at the Oak Ridge National Laboratory which purports to explain the NEPA process for the CSDP, the Phase I report "bridges the gap between the FPEIS and the Site-Specific EIS" and, using new data, "attempts to show on a site-by site basis that on-site disposal was not an incorrect choice" (emphasis added) (Field Notes, February 1, 1993).. If, the Army argues, the Phase I environmental report concludes that on-site disposal no longer looks like the environmentally preferred alternative, the Army will reassess the alternatives to the site. If however, the Phase I report *supports* or *validates* the selection of on-site disposal, the

Phase II Site-Specific Environmental Impact Statement (SSEIS) will deal only with the question of HOW BEST TO IMPLEMENT THE ARMY'S DECISION.

When questioned about why such a staged approach was necessary, the Army responded that "sequencing will allow the Army to get the most updated and complete information for the site-specific environmental documents'' (Commander, et al. May 12, 1988 p. 4). However, knowledgeable experts charge that Phase I and Phase II are "non-processes,'' and point out that there is nothing in NEPA which allows for a Phase I without having a Site Specific EIS. There are indications from Army documents that they didn't expect any change in the original on-site incineration decision. Again, in defense of the two-staged approach, the Commander of the LBAD wrote: "If, as expected, the Site-Specific document doesn't change the on-site disposal decision, the facilities still cannot be constructed until the Resource Conservation and Recovery Act (RCRA) permits are approved by the state" (Commander, et al. May 12, 1988 p. 5).

The Army gave reassurances that the PHASE I study would be reviewed by an "independent'' agency (i.e., the Argonne National Laboratory which depends heavily on Army contracts), and then certified to Congress. According to the Army, data used in the FPEIS to select the environmentally preferred alternative are identified, and more recent and more detailed site-specific data of the same types are gathered. After re-computing the five measures of risk, the results will be examined to determine if on-site disposal is still the environmentally preferred alternative (Army Report: Chemical Stockpile Disposal Program Site Specific NEPA Review Phase I Criteria). After comparing the risks, "If no significant differences in the data bases are revealed, the Army validates the programmatic decision for that site and the

SSEIS is then developed as Phase II of the process'' (General Busbee and Agency Statement: Before Subcommittee on Environment, Energy and Natural Resources, Committee on Government Operations, p. 5).

4.5.1 Data Collection for Phase I

Data collection for the Phase I Report was undertaken by the Oak Ridge National Laboratory (ORNL) and the final reports were to be validated by the Argonne National Laboratory (ANL). In addition to serving as a quality assurance check on the original programmatic decision, data was also collected in support of the Army's massive emergency response program, the Chemical Stockpile Emergency Preparedness Program (CSEPP).

However, the data collection effort attained gargantuan proportions and is worth examining in its own right. In conjunction with the Phase I study, the Army planned to collect "new'' and "updated'' information of a site specific nature in order to weigh the impacts of the Record of Decision on the various sites. The volumes prepared by the Oak Ridge National Laboratory in support of the Phase I Study, once assembled, filled several book cases. This "new'' and "updated" site specific data contained, for example, information regarding the general population and population trends surrounding each site; population figures for nearby counties; sensitive populations; daytime population distribution; nighttime population distribution; transient populations, number of employers with more than 100 employees; meeting and convention centers with total visitor seating capacity of at least 300; recreational facilities, annual events and attendance, state and federal public areas within 100 km of the site; schools and colleges with 100 miles; day care facilities; nursing homes, hospitals and number of beds, etc.

etc. Additionally, the Phase I Reports for the Lexington-Bluegrass Army Depot (LBAD) contain an entire book devoted to each of the cities of Richmond and Berea respectively which give detailed lists of teachers, professors, etc. In addition to enrollment facts and resident student figures, the Berea College section contains information on the college's student demonstration policy (Field Notes 1993). The Army will argue that all this information was collected in support of their enhanced emergency preparedness effort, and indeed some of this data is plugged into the Army's plume dispersion models which are used to predict how far a toxic plume will travel should their be an accident involving an "off-site'' release of nerve or mustard gas. However, it stretches credulity to argue that knowledge about the college's student demonstration policy is in any way remotely connected to effective emergency response. The question remains, what is the purpose of this over-kill data collection effort?

4.5.2 Phase I & Phase II: Non-Compliance with NEPA

In addition to citizens' complaints regarding the nature of the site-specific studies undertaken by the Army, an environmental lawyer familiar with the controversy charged that the Army's Phase I/Phase II process was in non-compliance with NEPA. In a letter to an Army representative at Aberdeen Proving Ground, the attorney wrote, "The apparent intent of the Department of the Army as indicated in the Notice is to use the "Phase I'' process to supplement the record of the Programmatic Environmental Impact Statement released in January 1988 (FPEIS). This is in direct violation of NEPA which requires preparation of a supplemental programmatic EIS so as to conduct all decision making in a manner subject to public review and

comment and due process consideration'' (Letter: Environmental Lawyer, Wyatt, Tarant & Combs to Ms. Marilyn Tischbin, Department of the Army, Aberdeen Proving Ground, MD., April 25, 1991, p. 5). The letter stipulates that 40 CFR § 1502.9 (c) (1) of The Council on Environmental Quality (''CEQ'') regulations state that agencies:

> shall prepare supplements to either draft or final environmental impact statements if . . . (i) there are significant new circumstances or information relevant to environmental concerns and bearing on the proposed action or its impacts [emphasis added].

Furthermore, according to the complaint, "a plethora of new information which bears directly on the Department's decision to incinerate has arisen in the five years since the Army issued its Draft PEIS'' (Letter: Wyatt, Tarant & Combs to M. Tischbin, April 25, 1991, p. 3). Nor is this the only quarter from which criticism emerges. Lawyers for the Kentucky Resources Council (Frankfort, Ky.) also raised serious questions about the legality of the Army's Phase I & Phase II Site Specific Process. A lawyer who represents the Council wrote:

> It is the belief of the Council, grounded in NEPA and judicial interpretations of the law, that a site-specific environmental impact statement which does not include a reconsideration of the programmatic decision is inconsistent with law.'' In addition, "the promise of a Site-Specific EIS in the future is meaningless [emphasis added] if later analysis cannot consider alternatives to the programmatic decision'' (Fitzgerald, Comments of the Kentucky Resources Council, Inc. on Final Programmatic Environmental Impact Statement Chemical Demilitarization Program, p. 2)

4.5.3 Phase I Conclusions

To date, all Phase I studies have been completed although not all reports have been released for public review. Final Phase I reports for Tooele, Anniston, Umatilla and Pine Bluff Arsenal have been released although, according to an Army spokesman, the Pine Bluff Arsenal EIS has been restarted. All of the above validated the Army's selection of on-site incineration as the "preferred alternative." For example, the principal conclusion reached by the ANAD Phase I Report, and confirmed by Argonne National Laboratory (ANL) was that "on-site disposal remains valid for disposal of chemical agents and munitions stored at the Anniston Army Depot" (Alabama) (Hunsaker Disposal of Chemical Agents and Munitions Stored at Anniston Army Depot, Anniston, Alabama, Final Phase I Environmental Report Alabama, Final Phase I Environmental Report).

The Phase I Reports from Pueblo (PUDA), Aberdeen (APG), Newport (NAAP), and Kentucky (LBAD), have been placed on hold (although Pueblo's should be out in the next two months) pending a review of the Alternative Technology report (April 1994) (Personal Communication: Marilyn Tischbin, Office of the Program Manager for Chemical Demilitarization, Aberdeen Proving Ground, Edgewood, Maryland, May 3, 1994 to author). These reports exist in a sort of "informational limbo" as DRAFT documents. However, the DRAFT documents give some indication of how the Army is leaning on the issue at these sites. For example, the Phase I DRAFT report for Pueblo Army Depot (PUDA) concluded that "on-site disposal remains valid as the environmentally preferred alternative for PUDA" (U.S. Army, 1991, STATUS DRAFT: Phase I Environmental Report-Disposal of Chemical Agents and Munitions Stored at Pueblo Depot Activity, Pueblo, Colorado). The report

states that, "If one adds the off-site transportation risks---addressed in the FPEIS, but beyond the scope of this Phase I Report. . . the on-site alternative is clearly preferable. . ." (U.S. Army, Phase I Report: PUDA 1991, p. 6-18). In another example, the project leader in charge of overseeing the Phase I study for Aberdeen Proving Ground concluded also that nothing had changed and recommended that the original on-site decision stand, commenting that "If we cave in to one group, we'll have to cave into them all." (Field Notes: ORNL 8/26/91).

As stated earlier, if the Phase I Reports validate the original on-site decision, the Army will move to Phase II of the program which will simply be the implementation of the Record of Decision (ROD). The momentum is building and there is every indication that when all is said and done, the contractors hired to perform these studies will validate the on-site incineration decision at every site---with the possible exception of the Lexington Bluegrass Army Depot (LBAD) in Kentucky. In this case, the RCRA permitting regulations will become the primary stop gap for citizens wishing to block the construction of the incinerators.

4.6 'THE SCOPING GAME': "What Do These People Want?!"

The role of the Scoping Meeting as a mechanism of social control cannot be overstated. The process of "scoping" is defined by the regulations of the Council on Environmental Quality. Section § 1501.7 of CEQ regulations states: "There shall be an early and open process for determining the scope of issues to be addressed and for identifying the significant issues related to a proposed action" (Bregman 1992, p. 219). According to the Council, *scoping* is defined as the identification of the range of actions, alternatives and impacts

to be considered in an Environmental Impact Statement. Scoping is the principal method for involving publics in projects requiring an Environmental Impact Statement (EIS), and the *scoping meeting* has become the tool for both the dissemination of information about a project and an effective means of social control. For example, one of the well-known mechanisms of power described by Bachrach and Baratz (1970) {see Chapter 2} is *agenda setting*. This tool was employed very effectively by the Army (and on more than one occasion) at scoping meetings. A citizen activist gives this account of one such meeting which took place in Richmond, KY. in 1991:

> We're supposed to have input. We got to call who spoke when. We were supposed to initially. At the last second word came out that the Army had a "new game plan" {i. e., the order of speakers was arbitrarily changed}. It scared us because, you never know what someone was going to get up and say. As it turned out, at least the citizens were full of passion, unrehersed spontaneous passion.

According to Bear (1987), scoping is used to identify impacts that need to be addressed in the EIS and to identify impacts that are insignificant and can be eliminated from further consideration. The CEQ has published guidelines for federal agencies to follow with regards to scoping. As part of the scoping process, a lead agency is directed by the CEQ to "determine the scope (§ 1508.25) and the significant issues to be analyzed in depth in the environmental impact statement" (Bregman 1992, p. 219). Additionally, lead agencies are empowered to "Identify and eliminate from detailed study the issues which are not significant or which have been covered by prior environmental review (§1506.3), narrowing the discussion to these issues in the statement to a brief presentation of why they will not have a significant effect on the human environment or providing a reference to their coverage

elsewhere'' (Bregman 1992, p. 219). Thus, the control over issues is placed at the outset in the hands of the lead agency (in this case, the U. S. Army) who is then free to "define out'' of consideration issues which it feels are not significant. This policy has disastrous implications for citizens who choose to oppose a particular project, for whoever defines the issues to be held up for public debate has the power to define out of existence any issues which it deems threatening to the status quo. Such restriction is exactly what has happened on numerous occasions with respect to the Chemical Stockpile Disposal Program.

Some insight can be gained about this process by scrutinizing the transcripts of a typical scoping meeting for the Chemical Stockpile Disposal Program. The following examples, taken from the scoping meeting on the Phase I Site Specific Environmental Impact Statement (SSEIS) for the Lexington-Bluegrass Army Depot (April 25, 1991, Richmond, Kentucky), are illustrative of the point. At the beginning of the meeting some introductory remarks were given by a consultant at the Oak Ridge National Laboratory, who was involved in preparing the Phase I Site Specific Report for the Army. As he explained to the assembled citizens:

> One purpose of the NEPA process is to provide the documentation. These are the environmental impact statements, and the reason we're here tonight is to collect information for the preparation of a site-specific EIS for the LBAD. The EIS is intended to insure that the decision-maker (i.e., *the Army*) is fully informed in regard to the environmental aspects and the environmental implications of this proposed activity. . .As I said earlier, we're here to collect information'' (U. S. Army, Transcript of Public Scoping Meeting, Richmond, Kentucky, April 25, 1991, pp. 18, 19).

By emphasizing that the purpose of the meeting was limited to "collecting information," it was made clear that this was not the proper place to discuss controversial issues such as alternative technologies, the continued use of the incinerators or the hazards associated with incineration, etc. Zimmerman continued: "I should like to emphasize that the environment is only one element in that decision process. I should also emphasize that the ***environment*** is the sole purpose that we're here tonight. Other considerations that enter into this decision process are 'technical factors.' As the General mentioned, the ability of the JACADS high-temperature incinerative process to meet regulatory standards, to meet munitions standards, to meet hazardous waste standards, is to be considered in a different forum and different process than what we are entered into this evening" (U. S. Army Transcript, Public Scoping Meeting, Richmond, KY, April 25, 1991, page 19, line 1-16).

> As I said earlier, we're here **to collect information**. The purpose of this scoping meeting is **to solicit public comment**. It's to solicit comment on this proposed action in order to allow the development of a site-specific EIS, particularly a SSEIS that concentrates on significant issues while not wasting time or effort on those issues that are insignificant or of minor importance." (p. 19)

One could ask---insignificant to whom? Of minor importance to whom?

4.7 The Ambiguous Role of Public Participation and NEPA

The role of public participation in the NEPA process with respect to the Chemical Stockpile Disposal Program (CSDP) is highly contentious. Public participation, as such, is like the bogeyman to the Army, or at the very least it is viewed as a pain in the neck--- something to be dealt with and gotten over

with. Nevertheless, public participation is an essential part of the EIS process. Proponents of early public involvement argue that it has the potential for leading to a better project, as well as improving the possibility of a welcome from the residents of the project area. In order for projects to proceed smoothly, however, public participation must be handled "correctly" meaning, citizen opposition must be *channeled* effectively or else the whole project can become mired in delays. The principal vehicle for this proper channeling of citizen opposition is, of course, the scoping process and particularly, the scoping meeting.

Some argue there has been an unusually high amount of public scrutiny and input into the Chemical Stockpile Disposal Program (Hayes Holgate 1990; Hindman 1989), whereas others charge that said input is merely *pro forma*. The Army points to the funded community study groups as evidence of increased public participation in the program; but the suggestions and recommendations of these groups (when they go against Army prerogatives) are, more often than not, ignored as has been discussed in the preceding chapter. In defending the Army's "Decide-Announce-Defend" strategy with respect to the CSDP, a high-ranking political appointee at the Pentagon argued that, "NEPA allows them (i.e., the people) to *observe* the decision, but not to make the decision." (Acting Assistant Secretary of the Army: Installations, Logistics and Environment, The Pentagon, July 29, 1991). This attitude certainly flies in the face of the *spirit* of the law, but it is one to which the Army subscribes.

Some authorities claim that all that is required by the law (i.e. NEPA) is that citizens have "input" into the process (the Army seems to interpret the law this way); while others insist that the *spirit* of the law is honored only if

citizens are involved in the decision-making process itself---a more radical interpretation which means citizens in a community would have veto power over projects. The truth lies somewhere in between these two extremes, according to experts knowledgeable about the law (Personal Communication: Lynton Caldwell 6/21/92).

According to Bregman (1992), public participation is both implicitly included in the NEPA process and explicitly mandated in CEQ regulations. Bregman (1992) writes that, "Public involvement requirements are specified for all NEPA reviews under 40 CFR Chapter V (Parts 1500-1508), as well as for particular programs" (Bregman 1992, p. 37). However, he argues that NEPA does not absolutely stipulate that citizens participate in the decision-making (and there's the rub!), only that citizens have INPUT. This input can take many forms, (e.g. scoping meetings, community study groups, etc.). However, entities are not under any obligation to act on the information, only to listen and acknowledge such input. Within the scope of the present law as it stands, there does not seem to be any statutory way for citizens to have control of the decision-making process. The last word always devolves on the entity that proposes the action; in this case it's the Army. Bregman (1992) argues that only in rare cases is an action other than the preferred alternative taken. "Most of the time," he writes, "the Preferred Alternative is selected" (Bregman 1992, p. 2).

In conclusion, most NEPA experts and federal agencies recognize the potential benefits of public involvement, however, and firmly support the public participation component of the Act as public input often leads to improvements in design and better projects. Bregman (1992) suggests that the earlier in a study public participation is sought, the greater the likelihood that

the study will be completed on schedule and within budget and will be socially and politically acceptable to the local citizens (Bregman 1992, p. 44). He further insists that "consultation with interested parties be undertaken before agency decisions are made'' (Bregman 1992, p. 39).

4.8 Summary

The foregoing discussion adds considerable weight to the argument that the Army's response to citizen requests that each site be considered separately is purely *pro forma*. The studies in support of the Phase I Site Specific EIS began in 1991 and many are not yet completed as of this date. This has both positive and negative aspects. From the standpoint of the Army, there is considerable expense attached to undertaking these additional studies in addition to the delays in implementing the program. On the other hand, it buys time with which to fortify arguments for on-site incineration and to institute aggressive public "education'' programs. From the standpoint of the citizens who oppose the Army's current on-site incineration plan, it seems obvious that the Army was simply going through the motions and was using the process to validate its earlier decision without really giving serious consideration to the many new developments both in destruction technology and in population density that could have (or should have) provided the evidence to support a redirection of the program.

In conclusion, it should be noted that the citizen involvement component in NEPA, although weak in terms of changing outcomes, does allow putting vast amounts of sand in the gears of the decisional machine. It is a (moderate) triumph of previous struggles to put citizen input on the agenda. Clelland argues that, "The convoluted struggle to erase such input is

very expensive in time and energy and does drive superordinates crazy'' (Personal Communication, March 1995).

In this chapter we have been looking primarily at second dimensional power relationships. Those which involve, among other things, the "rules of the game'' which operate systematically and consistently to the benefit of the Army. In the next two chapters we will take up the subject of how patterns of power are maintained by attempts to control the universe of discourse. We will move into the realm of the third dimension of power, which Gaventa (1989) says is "the least developed and least undersood mechanism of power'' (Gaventa 1980, p.15). We will examine the legitimations and the myths that support the status quo and attempt to illustrate how these patterns are instilled, how they are maintained, and what happens when these patterns are challenged.

Chapter 5

The Third Face of Power: Legitimations, Ideologies and Myths

'Hobbesian state authority is masked for the multitude by a display of images staged for the purposes of ratifying the people's sense of living in a Lockean society of maximum freedom and government on trust.'

Frederick M. Dolan, 1991. "Hobbes and/or North: The Rhetoric of American National Security" in Arthur and Marilouise Kroker, *Ideology and Power in the Age of Lenin in Ruins,*.

5.1 The Third Dimension: Language and the Discourse of Power

In *Power and Powerlessness*, Gaventa (1980) argued that the least developed and least understood mechanisms of power are those of the third dimension. In speaking of the third dimension of power, of course, we are speaking about the various means through which power "influences, shapes or determines conceptions of the necessities, possibilities and strategies of challenge'' (Gaventa 1980, p. 15). Applied to the problem under consideration, it means examining the way the Army attempts to shape the way the problem is framed through the production of myths, control of information, creation of ideologies (or *reinforcement* of existing ideologies) and legitimations. Powers third dimension can be clearly seen in this remark, which surprisingly, was made by one who is active in opposing the Army's plan: "The way the Army works is like a freight train. It has tremendous momentum. The best you can do is to alter its course.''

We will begin with a discussion of language and its central role in defining (or warping) reality. We will examine the various legitimations the Army has offered for the destruction program and the institutions created to

support this function, and finally, we will analyze the predominant ideologies and myths with some conjectures about their possible consequences. Hence, we will examine the connections between language *use* and unequal relations of power, particularly in the United States with respect to the U. S. Army's Chemical Stockpile Disposal Program. Part of our task will be to examine Army discourse surrounding the issue and to expose the 'taken for granted' aspects to language which hide underlying ideologies. In addition to exploring some of the predominant ideologies that infuse the issue of the chemical weapons destruction program, we will look at the production of myths, discuss the various legitimations and attempt to relate these to the emergence of institutional structures and practices that support Army prerogatives.

5.1.1 Euphemisms of Domination:

In a provocative article in which she examines the euphemisms employed by the military with respect to our nuclear arsenal, Cohn (1987) describes the rationale behind what she calls *technostrategic discourse*. Here we are referring to the all-too familiar phrases such as "collateral damage" and "friendly fire." She notes that "men's reference point in technostrategic discourse is not themselves or even white men, is not human beings at all, it is the weapons" (Cohn, 1987,p. 162). She believes that such discourse functions as an "ideological curtain" disguising the real reasons for political decisions. This "ideological curtain" functions to mask reality and serves to blunt our realization of what is really taking place. It is the linguistic equivalent of the psychological defense mechanism known as "denial." Similar processes are evident in the Army's discourse surrounding the CSDP.

For example, the choice of the phrase "a permitted operation," which came up several times at a community meeting on alternative technologies at Anniston Army Depot (Alabama), is a prime example. When referring to "a permitted operation," the Army was supposedly referring to activities surrounding the construction of the incinerator facility at the depot. However, it was never explained what activity the phrase referred to or *where* the permission came from or exactly *who* gave the permission. It was left to the audience to infer that whatever activity the phrase was referring to had been legitimated by some higher authority, e.g., the EPA (Auburn University: Field Notes for August 1993, Anniston, Alabama ANAD).

Fairclough (1989) raises another important issue with respect to the relationship between power and modes of discourse, and that is the question of *access* to discourse. Who has access to which discourse, and who has the power to enforce constraints on access. The most notable example of this with respect to the Army's Chemical Stockpile Disposal Program involves the "Response To Query" (RTQ) system. Developed under the auspices of the CSEPP Public Affairs Subcommittee, the system is designed to identify and respond to questions and concerns from the CSEPP community (i.e., emergency managers in the states, Depot commanders, etc.), the public, and the media. The system works in this way: (1) Questions are solicited from the CSEPP community and fielded to headquarters in Washington; (2) Public Affairs personnel review the questions and come up with a pat answer: one which will answer the question in a way that is consistent with the Army's point of view; (3) the questions and their "correct" answers are then made available to a fairly wide audience consisting of emergency managers in the states---Depot commanders, liaison officers, etc. The questions and answers

are then incorporated in CSEPP documents that can be used to "educate'' the public about emergency response and the CSDP in general. It should be stressed that at no time are answers formulated by personnel at the state or local level. The "correct'' answers come from headquarters in Washington. What *Response To Query* (RTQ) is really about is standardization, control over the universe of discourse, and limiting access. The Army argues that this level of control is necessary:

> The decentralized nature of CSEPP, involving 10 states, 32 counties, and at least five Federal agencies, demands a program-wide system to ensure that managers and staff at all eight CSEPP sites provide consistent, accurate, and timely responses to both public and news media queries. The RTQ system is intended to meet that need first, by identifying those questions and concerns already being asked of or anticipated by CSEPP managers and staff, and second, by providing the answers. (*CSEPP Update,* September/October 1991, p. 11).

They conclude with this statement which appears in italics in the text to emphasize its importance: "*Information provided through the RTQ system is not intended for proactive use*'' (*CSEPP Update,* September/October 1991, p. 11). What does this statement mean in terms of controlling access? It means that although the public will be permitted to hear some of the answers, they will not have input as to how the questions are framed at the outset. The lists of questions and answers are not meant for general distribution, but are meant to be used as <u>tools</u> to insure uniformity of response from all concerned parties. RTQ is not intended to open up new issues, nor can it be viewed as a real attempt at dialogue. Citizen groups do not have input or access to the Response-To-Query system. The RTQ system will be revisited later in the

discussion of Army propaganda at which time which we will attempt to explain how RTQ fits into the more global propaganda schema.

5.1.2 What Does the Word 'SITE' Mean?

The Army's obsessive need to control the universe of discourse goes beyond merely employing euphemisms and extends to concern with the usage and *meaning* of words as well. One example comes directly from an Army newsletter called, *CSEPP Update*, which reads: "The word SITE as it is used by the chemical surety community is often misleading and misrepresents what is actually intended by the writer. Why? There are numerous meanings for the word site. It's actual meaning depends on how it is being used and the connotations used before and after its initial use'' (Ellenberger 1992, p. 8). This document originates from the office of the Army's Chief Public Affairs Officer at FEMA (Federal Emergency Management Agency) headquarters in Washington, D. C. The piece quoted above is from an article entitled, "What Does the word SITE mean?'' Ellenberger (1992) argues, that the word "site'' has picked up sinister meanings when used in the context of emergency response and he wishes to advise those who are involved in writing documents for the Army's weapons disposal program, to be careful of its usage. He cautions that use of terms such as "incinerator site'' may conjure up negative images in the minds of some people. He suggests that other words such as "location'' be substituted for the word "site'' whenever possible. So instead of 'stockpile site' or 'incinerator site', you speak a location instead. The rationale for this suggestion is contained in the following paragraph which is reproduced here in its entirety despite its length:

> The major concern is that. . .If this meaning is prevalent in chemical emergency preparedness literature, continued use of the more generic meaning could lead to the wrong perception; {emphasis added} that is, the installation, facility, location, to include the surrounding civilian community will equate to the problem area, when in fact nothing is further from the truth. These are the exact areas where emergency preparedness is being improved and these locations are being made safer to prevent them from becoming a SITE.
>
> Bottom line--Let's start using the NCP and the new AR 50-6 definition of the words site and on-site and eliminate the use of the more generic meaning of these words. . .

In another example of this phenomenon, the use of the term "safe'' has undergone transformation through the years. An Army document prepared in 1986 contained the words: "The U. S. Army is actively planning for the safe and environmentally acceptable disposal of obsolete and unserviceable chemical warfare agents and munitions'' (ORNL 1986, Report No. 6197, p. 1). This contrasts markedly with later language usage where principals were directed to avoid the use of the word "safe'' altogether (*CSEPP Update* 1991, which cautioned emergency managers and others concerned with the Chemical Stockpile Disposal Program to "Avoid the Word 'SAFE' when Talking About Risk''). The newsletter goes on to describe how participants at a professional development workshop on risk communication were opposed to using the term "safe'' to define risk to the public, "whether it relates to a substance such as dioxin or to a plant or other site, like a landfill'' (*CSEPP Update* 1991, p. 9). One workshop participant cautioned, "If you mean safe is zero risk, then your credibility goes down real quick when there is some

exposure.'' The CSEPP article prescribes the following precautionary strategy to avoid the above-mentioned pitfalls:

> It's better to talk about *minimal* or *acceptable* levels of risk. Public affairs or public information practitioners should encourage discussions about risk between an organization and its neighbors in order to build trust (*CSEPP Update*, September/October 1991, p. 9).

5.1.3 Army 'Newsspeak' and the CSDP:

The Army has developed its own version of "newsspeak'' for the Chemical Stockpile Disposal Program (CSDP). The Army's stockpile disposal plan is known in the halls of the Pentagon as "chem demil''---bland Army shorthand for an emotional issue---the destruction of 27,000 tons of unitary chemical weapons in specially designed high temperature incinerators, most of which are located near thriving population centers. The term 'demilitarization' (*demilitarization* for short) is an Army term meaning "to render unusable for any military purpose'' (Transcript, February 16, 1984, Public Meeting, Richmond, KY. p. 1).

In classic Orwellian fashion, numerous euphemistic "inversions'' appear regularly in Army documents relating to the CSDP. They also crop up in briefings, in newsletters, at scoping meetings, and in professional journals as well. Some of the more notable examples include the following (N. B. This is not an exhaustive list, but it does provide a window of opportunity to see how language affects the way the problem is framed from the Army's point of view).

In the Army's carefully crafted rhetoric, one speaks of "selective incentives'' (not bribes) to make hazardous waste facilities more appetizing to

local communities (Carnes and Sorensen 1983). The community opposition, which is in fact *national* in scope involving all eight storage sites, is labeled "locational conflict'' or "localized resistance," and the vociferous citizen opposition is referred to as a "siting controversy,'' thus minimizing the central role of power. In terms of dealing with affected publics, otherwise referred to as "stakeholders,'' the Army speaks of "building consensus,'' "maintaining citizen concurrence,'' or "channeling opposition.'' In terms of the potential risks associated with the program, the Army talks about the need for "mitigating public concern,''and about "perceived risk'' (as if there were no *real* risk). In this regard, the word "accident'' is assiduously avoided; instead, we speak of a chemical "event,'' or an off-post "incident'' (meaning a plume of deadly nerve gas which travels beyond the installation boundary), or an off-post "release.'' One never speaks of nerve gas, only "agent.'' One never speaks about how many people might die as a result of a chemical *event*, instead, we speak of "no-death downwind distance.'' One does not use the word weapons but "munitions.'' The Army speaks about "Getting the Job Done,'' and about "Lessons Learned.'' The Army never lies, they just say they "mishandled the truth.'' "Public education'' and "public outreach'' become euphemisms for propaganda. In speaking about the NEPA review process, professionals refer to agencies that initiate actions calling for the preparation of Environmental Impact Statements (EISs) as "potentially responsible parties,'' or PRPs; thus masking the fact that in the scheme of things, the deck is stacked in favor of this entity.

Some other items worth mentioning in this lexicon of technostrategic discourse are the euphemisms employed to describe the toxicity of agent and probable fatalities. Terms such as LD_{50} (Lethal dose to 50% of those exposed),

and LCt_{50} (Statistically derived concentration-time integral, lethal for 50% of "reference population"), are derived from an older statistic, the "Mortality Index" which rated degrees of toxicity and was usually expressed as: (1) The lower limit of irritability; (2) The limit of supportability; and (3) The Mortality Product. *The Mortality Product*, also termed the *Lethal Index* or the *Hober Product W* which:

> gives the toxic power of the asphyxiants and of those poisons absorbed through the skin. It cannot be experimentally determined on the human subject, and experiments are normally made on animals: cats, rabbits, calves and dogs" (Clark 1968, p. 3).

Notice the deliberate banality of the term "reference population." Here we could be referring to infants (for example, newborns), children, the disabled, or the elderly. The term "reference population" is denuded of the emotional impact that would be associated with speaking about death by nerve gas. Notice also that the more modern statistical terms have been stripped of their older references to "poisons" or "mortality," but the things that they refer to are no less dangerous. Finally, mention should be made of the curious linguistic practice of making verbs out of nouns, e.g, "task" becomes "tasking" or "tasked" as in "The Oak Ridge National Laboratory was *tasked* to study the problem of reentry."

Fairclough (1989) who has explored the connections between language and power, posits a dialectical relationship between the two. He argues that the relationship between discourse and social structures is not a one-way relationship, but instead represents a dialectical one. He writes:

> It is because the relationship between discourse and social structures is dialectical in this way that discourse assumes such importance in terms of

> power relationships and power struggle: control over orders of discourse by institutional and societal power holders is one factor in the maintenance of their power (Fairclough 1989, p. 37).

He further argues that, "As far as the social world is concerned, social structures not only determine social practice, they are also a product of social practice'' (Fairclough 1989, p. 37). The language employed by the Army in documents and statements relating to the CSDP, attempts to: (1) limit the scope of the problem; (2) minimize the breadth and strength of the opposition; (3) minimize the threat and the consequences of a potential chemical accident; (4) redirect our attention away from public safety concerns by tauting its emergency preparedness plan as a panacea and (4) trivialize other issues the Army wishes not to discuss. At the same time, the Army focuses on its instrumental goal of destroying the weapons in the most efficient way manner, and we would add---with the least possible interference from citizens.

Following Fairclough's (1989) analysis, the Army's choice of discourse is directly related to the numerous challenges mounted by citizens who oppose the on-site incineration plan. Citizen opponents of the Army's current disposal plan, being fully cognizant of the centrality of language in defining the problem, have mounted numerous challenges to the Army's 'definition of the situation', through newsletters, circulating petitions, sponsoring public forums, writing letters to the editor, talking to reporters and newspaper editors, writing letters to friends and public officials, participating in public debates with Army representatives, educating Congress, sponsoring conferences, etc. They have attempted time and time again to force the Army to clarify its positions. They have challenged the

Army's rhetoric concerning the alleged "safety" of incineration on numerous fronts. Their attempts to expose the myths behind the Army's various pronouncements have been nothing less than heroic. Their stick-to-itiveness has been a source of great consternation to the Army, causing one Army spokesman to declare in desperation, "What do these people want?!"

5.2 The Function of Legitimation

Legitimation is the process of "explaining and justifying" the institutional order. The problem of legitimation has been examined by numerous scholars, most notably in the work of Habermas (1973) and Berger and Luckmann (1967) from whom we take our point of departure. Berger and Luckmann (1967) begin their discussion of legitimation by reminding us that, "*All* social worlds are precarious. *All* social worlds are constructions in the face of chaos" (Berger & Luckmann 1967, p. 103). This said, they go on to assert the primary necessity for <u>all</u> societies to defend and promote their view of reality. They distinguish between first-order and second-order objectivations (of meaning). First-order objectivations have to do with the "taken-for-granted" world view incorporated by the child in the process of primary socialization. During this process, the world view of the particular society into which the child is born is absorbed into consciousness *in its totality*----without question or need for justification. Berger and Luckmann (1967) point out that legitimation has both cognitive and normative elements. Not only does legitimation tell an individual why a person should perform one action and not another, it also tells him why things <u>*are*</u> the way they are. Legitimation *explains* the institutional order by ascribing cognitive validity to its imperatives. Additionally, integration in one form or another

is also a typical motive underlying attempts at legitimation (Berger & Luckmann 1967). Thus the Army makes much of the fact that the NEPA process, particularly the public scoping meetings, are there to bring people "into the process," when, in reality, they are part and parcel of the *legitimation* process for the Army's program. In fact, we argue that the NEPA process itself has been co-opted by the Army for the purpose of legitimation.

The earliest and simplest forms of legitimation are those which simply affirm: "This is how things are done." The second level deals with theoretical propositions in rudimentary form: proverbs, moral maxims and wise sayings are common on this level. The third level of legitimation contains explicit theories by which an institutional sector is legitimated in terms of a differentiated body of knowledge, for example, rules of kinship as developed and administered by elders of a clan. Berger and Luckmann (1967) state that "with the development of specialized legitimating theories and their administration by full-time legitimators, legitimation begins to go beyond pragmatic application and to become 'pure theory'" (p. 95). Symbolic universes constitute the fourth level of legitimation. Berger & Luckmann (1967) write, "These are bodies of theoretical tradition that integrate different provinces of meaning and encompass the institutional order in a symbolic totality" (Berger & Luckmann 1967, p. 95). Here we enter the realm of language and types of "discourse" which serve to reinforce the "correct" view of reality. Berger & Luckmann (1967) stress the importance in understanding the "taken for granted" nature of these symbolic universes. They come to us as if they were inevitable and immutable laws, forgetting that they are human creations and must be sustained and reaffirmed from generation to

generation. This is the problem of legitimation. In *The Sacred Canopy*, Berger and Luckmann (1969) write: "The problem of legitimation is to explain why the particular arrangement that has developed in a particular society, in whatever sequence of historical accidents, should be faithfully adhered to, even if it is at times annoying or downright painful'' (Berger 1969, p. 20). With respect to this point, the Army hides behind NEPA procedures to affirm its right to control the process.

Yet another strategy for reinforcing power is the careful employment of the symbols and rituals of power. We are reminded of the centrality of these symbols of "ideological hegemony'' from writers such as Habermas (1975) and Lukacs (1971) who wrote about the importance of symbols in maintaining dominance:

> Legal privilege, deference, prohibitive ritual display and their many manifestations are means of domination which are exercises in the establishment of *legitimacy*. The key point here is that they come into being as a result of *already* existing relations of super-and subordination (Wenger 1980, p. 367).

The Army has made good use of its already-established position of dominance through the use of ritual displays. Anyone who has attended scoping meetings is familiar with the spectacle of Army personnel in uniforms and the profusion of American flags. A citizen from Richmond, KY., commenting on the early years of the opposition movement there said:

> We had lots of meetings with the Army. . .There were lots of meetings. They were very intimidating to us. They wore their uniforms. They were trained in a manner that was professional. They didn't know our names.

Another interesting illustration of the use of symbols to legitimate the stockpile destruction program involves the creation of the Chemical Stockpile Emergency Preparedness Program (CSEPP) logo. In 1991, FEMA and the Army approved an official logotype for use on all CSEPP printed materials. The logo was a triangle representing the three tiers of government involved with the CSDP: federal, state and local. According to their newsletter *CSEPP Update*, the logo was created:

> To project a consistent graphic image of our program. . . Its graphic elements are designed to solidify and strengthen CSEPP identification in each community. . .The Public Information and Education Standards recommended that the logo be used for CSEPP letterhead, CSEPP publications, briefings, transparencies and slides and CSEPP signage (*CSEPP Update:* September/October 1991, p. 2, 3).

The CSEPP logo was in use until the summer of 1992 when it was discontinued because of a special set of circumstances (see Chapter 6 for details). In the following sections we will review the typical legitimations offered by the Army and examine some of the institutions and practices that support the legitimation function.

5.3 Army Legitimations for the CSDP

Since its inception, the Army has offered numerous justifications for the existence and the necessity for the Chemical Stockpile Disposal Program (CSDP). Some of the major legitimations proffered by the Army have already been mentioned in a previous chapter, e.g., the Congressionally-mandated destruction deadline, the dangers of continued storage (i.e., *the deteriorating*

stockpile argument), the alleged "safety" of incineration, our international treaty agreements to eliminate chemical/biological weapons (i.e. the Chemical Weapons Convention {CWC}), the potential economic benefits to the affected communities in terms of job creation, etc. All of these rationales have been debunked by factual demonstrations of their specious character. However, there is more to the process of legitimation than merely making pronouncements. In the next section, we will undertake an examination of some institutional arrangements that have evolved as a are part of this *process*.

5.4 The ICCB and SARA Title III: Legitimating Practices and Institutions

SARA Title III, otherwise known as Public Law 99-499, the Superfund Amendments and Reauthorization Act of 1986, also known as the *Emergency Planning Right-To-Know Act of 1986*, was created in response to the disaster in Bhopal, India in which several hundred people were killed due to the release of toxic chemicals. Title III's primary objective is to force states and communities to plan for these types of accidents. To accomplish its goals, Local Emergency Planning Committees (LEPCs) were established in communities. These local committees were responsible for: "(1) gathering data on chemical facilities and disseminating that information to the public ("right-to-know"), and (2) incorporating public participation in chemical hazards planning" (Feldman 1991, p. 134). For a variety of reasons, not the least of which is the paucity of resources available to the LEPCs to carry out their mandate, Local Emergency Planning Committees (LEPCs) have fallen short of the mark set for them by the law.

The Army, anxious to gain acceptance for its program of on-site incineration, and being fully cognizant of the added burdens placed upon

these local emergency planning committees, seized the day and superimposed another institutional structure, the **Intergovernmental Consultation and Coordination Boards (ICCBs)** on to the already-existing Local Emergency Planning Committee (LEPC) structure created under SARA. Among other things, the ICCB added to the LEPC structure the fact of centralized control and coordination from the Pentagon. This statement taken from the minutes of the Kentucky ICCB meeting which was held in Lexington on October 6, 1989, is indicative of the Army's thinking on the matter:

> f. There will be a Steering Committee meeting at the Pentagon in November. We need to be looking at such things as political and economic differences, etc. We need to develop a central theme that we can utilize in these programs (*Minutes* : LBAD ICCB Meeting, Lexington, KY., October 6, 1989, p. 2).

Title III requires that LEPCs be comprised of relevant state and local officials, police, fire, civil defense, public health, environmental affairs, transportation personnel, members of the mass media, and designated community groups (Feldman 1989, p. 16). While the Army is not legally obligated under SARA Title III as are private enterprises engaged in similar activities, the DOD agreed to voluntarily comply with certain aspects of the law, and employing an expansive interpretation of the Act, decided that the goals of the newly-created ICCB structure would best be served by including the following components: "(1) Army participation in local LEPCs; (2) Army selection of persons to serve on ICCBs; and (3) development of emergency notification and warning systems in cooperation with local communities" (Feldman 1989, p. 2). Through these channels, Army influence penetrates deep into the local social structure.

Concern about emergency response for the CSDP is a legitimate concern of the Army (nearly $8,000,000 has been allocated), but so is community acceptance of incineration technology. We argue that the primary reason for the creation of this additional bureaucratic tier is to control the information flows into the community concerning the CSDP and to attempt to co-opt important members of state and local governments and other "diverse interests'' into compliance with the Army's Chemical Stockpile Emergency Preparedness Program (CSEPP).

There is little doubt about the Army's intentions to use the newly-created ICCBs as a vehicle for gaining community acceptance for the Army's program. Feldman (1988) writes about "Maintaining Citizen Concurrence and Gaining public Support through Intergovernmental Consultation'' (Feldman 1988, p. 14). Later, he proposes that, "Intergovernmental Consultation and Coordination can reduce public opposition by providing institutional arrangements to mitigate socio-economic impacts arising from implementation of this program'' (Feldman 1988, p. 14). He goes on to describe various methods by which the Army can induce communities to accept the CSEPP program by using either (a) tax-equivalent payments in lieu of revenue losses resulting from the necessity to upgrade emergency preparedness infrastructure; (2) anticipatory compensation payments prior to an action; or (3) incentive-building measures which might include providing technical assurances of quality control in program management, mitigating health and safety concerns, upgrading emergency response capabilities (Feldman 1988). Indeed, the Army's decision to build Emergency Operation Centers in communities adjacent to each of the stockpile sites, represents such an effort.

Feldman (1989) argues that because SARA Title III encourages the participation of "diverse interests" in emergency planning (e.g., the mass media), the presence of these organizations on local ICCBs "may also produce a climate more conciliatory from that which prevailed during the public hearings/scoping meetings phase of the CSDP" (Feldman 1989, p. 3). In defending the need for the creation of this additional bureaucratic structure to supplement the already-existing Local Emergency Planning Committees, Feldman (1989) argued that:

> While effectively facilitating installation-local community contact and liaison for CSDP emergency planning, however, LEPCs cannot preform all intended aspects of ICCBs. Non-emergency planning activities, such as public information and education, channeling public concerns to the Army, should be provided by ICCBs (Feldman 1989, p. 1).

Because these local committees are not autonomous from the structure, they are very dependent on on the Army's good will in order to obtain the needed goods and services necessary to cope with any untoward accident resulting from CSDP operations. This indebtedness helps to insure *compliance* and allows the propaganda function to flourish without being obvious. Feldman's (1989) research into LEPC functioning at the various stockpile sites, indicated an almost universal lack of resources necessary to deal with the joint responsibilities imposed upon them by SARA and the CSDP. He reiterated this failing at a Hazardous Materials Management Conference in 1991, where he said: "Currently, the sole sources of fiscal support for LEPCs are state and local government revenues (often derived from a special chemical facilities' operator tax) (Feldman {April} 1991, p. 135). This is one of the reasons they are so vulnerable to Army influence. He

found, for example, that in Alabama, "public information management, in general, is not up to expectation," and additionally, his report noted that, "the state lacks adequate resources for information management, data processing and clerical support" (Feldman 1989, p. 9). In Arkansas, he found that no money had been appropriated for Title III implementation. With respect to Colorado, he wrote, "Title III has been funded by established emergency planning budgets of other agencies. Pueblo does levy a small fee on chemical facility operators" (Feldman 1989, p. 10). In Indiana, he reported that there is no "Right-To-Know" law and noted that for 1987-88, Indiana had appropriated $65,000 for Title III implementation. This translates into one full and two part-time staffers and a small office. In Kentucky because of financial constraints, he reports, a "less than perfect effort" of Title III implementation exists. (There are other reasons that may explain Kentucky's "less than perfect effort" with respect to Title III implementation. It may also be due to the Army's lessened credibility and influence at that site and to the Army's inability to co-opt important members of state and local governments). Feldman (1989) makes much of the organization and super-enthusiasm of the LEPC in Fayette County, Kentucky as compared with that in Madison County, Kentucky. The fact of the matter is that Madison County (the site of the Lexington-Bluegrass Army Depot) is more likely to be affected by an off-site release from LBAD, but it is also the site of the most vociferous and tenacious opposition movement. In an attempt to put a positive "spin" on events at LBAD, Feldman (1989) stresses the importance of "personal rapport" in the success of the ICCB program. He reports that in Madison County, for example, this rapport was developed over a period of eight

months in a series of one-on-one meetings "which were very constructive" (pp. 25-6).

In Maryland, he found that while unable to devote much money to local emergency planning, Maryland had a head start on SARA implementation because its own hazardous materials plan had been in operation since 1987. In Oregon, although no SARA Title III funding has been made available to Oregon, the state's RTK law has been funded separately for some time. Finally, in Utah, he reported that Title III implementation funds had been made available by the legislature, but had not found their way to counties. However, this is where the need for funding is felt (Feldman 1989).

5.4.1 Mitigating Public Concern through 'Compensation':

The financial resources being thrown at these communities via ICCBs in an attempt to enhance their readiness to handle a chemical accident are substantial. In conjunction with discussions concerning the role of ICCBs in enhancing public acceptance of the Army's emergency plan, compensation looms as one possible avenue of entry, as this statement demonstrates:

> A principal means of mitigating public concerns in perceived risk laden programs is compensating communities for their impacts (Carnes, et al., 1983). This can be a prime factor hastening public acquiescence toward such programs. The Army, working in conjunction with FEMA, is committed to upgrading emergency response infrastructure at CSDP sites (U. S.Army, 1989a). Initially, this upgrade process involved expenditures of $100,000/CSDP state, with several upgrade stages yet to be completed, as well as additional funds (Feldman {May} 1991, p. 1018).

According to Feldman (1988) "Four different but complementary goals of ICCBs have been identified: (1) meet with requirements of federal laws; (2) maintain citizen concurrence with, or gain public support for a program; (3) maximize program effectiveness by minimizing delay and legitimizing decisions; and (4) promote democratic values shared by members of the public'' (Feldman 1988, p. 13). It is the second of these goals, that of *maintaining citizen concurrence*, that concerns us here, for we are arguing, that legitimation of the on-site incineration decision through the co-optation of community social structures is the *raison d'etre* for the Army's creation of the ICCBs. An Army Public Affairs Officer, gave the Army's version of why the ICCB was created, "To create a format to present a reasoned argument of what's going on'' (4/28/92 Personal Communication to C.Griffith Davies). Indeed, ICCB is considered by some as "a potential form of alternative dispute resolution {or ADR} (Bear 1989) likely to increase the chances for constructive solutions to environmental conflicts by avoiding impasse'' (Feldman {May} 1991, p. 1019). However, ICCB board participants at the Lexington Bluegrass Army Depot site in Kentucky, paint a rather different picture. According to Kentucky representatives, ICCB meetings are very top-down affairs with the Army setting agendas, showing viewgraphs, giving briefings, etc. One informant remarked, "ICCB was originally sold to the communities as an *information conduit* but it's been totally subverted into emergency response.'' A knowledgeable Kentucky state official commented, "I was concerned about spending so much time on emergency response." The reference to "emergency response'' refers specifically to CSEPP---the Chemical Stockpile Emergency Preparedness Program---the Army's grand plan designed to protect citizens from a chemical accident resulting from CSDP operations.

The focus on emergency response is very significant, for if one becomes enmeshed in the workings of the Army's Chemical Stockpile Emergency Preparedness Program (CSEPP), one buys into the idea of the inevitability of on-site incineration. Citizens who oppose the Army's plan in Kentucky realized this early on, as did the citizen activists in Maryland who, at one point, refused to accept money from the Army for emergency response.

5.4.2 The ICCB and Control of Information:

In conjunction with centralized control from the Pentagon, the Army imposes tight controls over the flow of information emanating from national ICCB meetings. While declaring that the process of information exchange through the consultation and coordination process is a vital component of the program, they tolerate only two types of information flow at the national level, i. e., from Army officials at the Pentagon to the local ICCB; from the local ICCB to the Pentagon. Information to the general public (and that includes citizens in the affected communities) is carefully controlled and monitored. An Army directive flatly states:

> All information provided by the Army to Local and Programmatic ICCBs which is in draft form and/or has not been cleared for public dissemination shall be treated as sensitive, confidential, and {is} to be withheld from public disclosure until cleared by the Army for public release (U. S. Department of the Army, *Procedures of the CSDP Programmatic and Local Intergovernmental Consultation and Coordination Boards*, no date, p. 4).

While minutes are kept of the local ICCB meetings, none are kept of the national meetings, and all ICCB meetings are closed to the public (although at times, visitors are permitted at local meetings). Feldman (1991) writes that "The status of meeting closure, practiced by all ICCBs, is a

contentious issue'' (Feldman 1991, p. 1017). The Army's rationale for meeting closure can be seen in the following statement: "The prevailing view is that ICCBs are a "buffer'' between the general public and the Army, offering the former the opportunity to channel their concerns to officials having access to the CSDP, while offering the latter a good communication forum for the candid airing of concerns'' (Feldman 1991, p. 1017). The Army feels that access should be controlled to "expedite frank discussion of concerns'' (Feldman 1991, p. 1017). The real reason behind this need to control access to these meetings is that they want to prevent the general public from hearing discussions concerning such things, for example, as: (1) the re-entry problem which involves decisions as to when and under what circumstances persons may return to their dwellings after a chemical accident involving stockpile destruction activitities---a very sticky issue for the Army and a potentially hot potato for Army Public Affairs moguls; or (2) the problems with testing at the Johnston Island facility; or (3) discussions about bids and the amount of contract awards etc. While the Intergovernmental Consultation and Coordination Board (ICCB) is not the main pillar in the Army's arsenal of institutions and practices designed to win public support for the incineration of chemical weapons, it is not insignificant. Although its influence is subtle, it represents yet another example of power processes at work, it creates another barrier to participation. An appreciation of its various workings and underpinnings can help to illuminate other parts of the puzzle.

5.5 Ideology and Myth in the CSDP

Closely associated with the concept of legitimation is that of *ideology*, which Berger and Luckmann (1967) describe as, "ideas serving as weapons for

social interest'' (Berger & Luckmann 1967, p. 6). According to their formulation, ideologies are the underlying assumptions (or presuppositions) embedded in particular conventions and depend on the power relations which underlie these conventions. However, Clelland notes that "'ideology' is more often viewed as explicit rationalized doctrine" (Personal Communication, March 1995). Ideologies are means of legitimizing existing social relations and differences of power simply through the recurrence of ordinary, familiar ways of relating which take these relations and power differences for granted (Berger & Luckmann 1970). What are the underlying assumptions or presupposition that underscore Army rhetoric vis-a-vis the Chemical Stockpile Disposal Program? In this section we will explore some of the more obvious ideologies and the myths that support them.

5.5.1 Ideologies and the CSDP

One of the most frequently employed ideologies to emerge in the early days of the CSDP was what we refer to as *the ideology of harmony*. The idea that "we're all in this together.'' The idea that we share a common goal (i.e., that of getting rid of chemical weapons) and a common purpose. Marx gave the fullest expression to this notion when he wrote: "The ideas of the ruling class are in every epoch the ruling ideas, i.e., the class which is the ruling *material* force of society, is at the same time its ruling *intellectual* force'' (*The German Ideology*, pp. 64-66). He further argued that each ruling class conceives its ideas to have the status of immutable, inevitable laws. "For each new class which puts itself in the place of one ruling before it,'' he wrote:

> is compelled, merely in order to carry through its aims, to represent its interest as the common interest of all the members of society, that is,

> expressed in ideal form: it has to give its ideas the form of universality, and represent them as the only rational, universally valid ones (Marx & Engles,*The German Ideology* {1845-6}(1970) p. 65).

We see the echoes of this sentiment expressed in the Army's defense of the programmatic decision as doing, "What's best for the country." Marx further argued that during normal periods, (i.e., not during periods of upheaval or revolution), the majority of the subordinate class in most societies hold the belief that the society is working for their interests---or, at least, that it is the best possible society at the present time (Sherman and Wood 1989). Finally, mention should be made of Gramsci's notion of "cultural hegemony" since "harmony" is an idea generally accepted by both superordinates and subordinates thus making it difficult to combat.

5.5.2 Eliade and the Function of Myth

The function of myth according to Eliade (1958) is to provide a model, an exemplar, an archetype. "The main function of myth," he writes, "is to determine the exemplar models of all ritual , and of all significant human acts" (Eliade 1958, p. 410). Unfortunately, the original term '*mythos*' came to denote "what cannot really exist" and in usage came to mean "falsehood" or "illlusion." However, Eliade (1958) argues that this is not how we should understand "myth." He directs us to look upon myth rather as the ancients looked upon them, as "exemplars" and models or patterns of behavior. According to Eliade, "Myth is an extremely complex cultural reality, which can be approached and interpreted from various complementary viewpoints" (Eliade 1963, p. 5). Myth taught man the primordial stories that gave him his existential identity, and for contemporary Americans, the myth of democracy

(i. e., the belief that the U. S. is a democracy in the classic sense) holds preeminent place among all our cultural myths.

5.5.3 The Myth of Democracy

In the beginning (1984) the Army relied heavily on calls for patriotism to secure the cooperation of communities. In attempting to convince them that the weapons were everyone's problem and their rapid destruction was in everyone's best interests, they made it seem as if it were their patriotic duty to cooperate with the Army's incineration decision.

The Army's rhetoric of "we're all in this together" did not hold sway very long in Kentucky. Therefore, Army replaced *patriotism* argument and began relying on what we call the *myth* of democracy. Belief in the *ideal* of a Jeffersonian Democracy (i. e., 'government of the people, by the people, and for the people') runs very deep in Richmond, KY. Belief in democracy as a cherished value is to be found among all the persons interviewed in conjunction with this program--- Army personnel as well as citizen activists of varying political persuasions. For example, in describing the early days of organizing Concerned Citizens of Madison County in Richmond, KY., one informant said the Army held many meetings with local citizens in the early days (circa 1984). As this Concerned citizen recounted: "Before the meeting, you can't imagine the turn out. It was swelling. What every person had done was before your eyes. Democracy and *we the people* were about to speak." When asked to speculate on the probable outcome of the citizen protest at LBAD, that person replied, "I feel that they will gradually phase out this site because of the number ---we have less (i.e., LBAD has only 1.6% of the stockpile)--- and this is a democracy." Another example comes from the

account of an activist who was present at the hearing in which testimony was given before the House Armed Services Committee. Speaking about the Army, the informant said:

> They were damn mad. They were summoned by the duly-elected representatives of the people. We had our day. [*Associate*] and I were treated fairly. That night, we passed the Jefferson Memorial. It's true. We the people have the right to redress our grievances. That made me feel great. If you have a plausible concern, then you make yourself heard.

These eloquent expressions embody our most fundamental political beliefs; yet they symbolize what we *perceive* to be true, rather than what is *actually* true. Following Eliade's (1958) formulation of myth as a pattern or archetypal model, the ideal of democracy, i. e., 'government of the people, by the people and for the people' is the quintessentially American myth. It is the model by which we judge other governments and our own conceptions of right and wrong behavior stem from our belief in this model. However, the myth can be employed by powerful interests to control the behavior of citizens. It can be used to thwart any attempts at rebellion. By evoking this myth, as the Army has done on numerous occasions at scoping meetings, in the press, in face-to-face encounters with opponents of the program. The ideals of democracy which revolve heavily around citizen participation in and control of government, can be effectively used to dissipate dissent. Let us make note here of the dialectic of "cultural hegemony." The ideology of democracy does encourage dissent and does force the Army into an incredibly convoluted decision process. That is, this aspect of cultural hegemony is quite expensive for superordinates.

On numerous occasions, the Army has cautioned citizens to be patient and to have respect for "the process." "Having respect for the process" is equated with democracy. Here, instead of being the actual practice of democracy with all the potential chaos of a genuine "give and take" situation, we have the Army making a fetish out of the process and equating that with democracy. For example, citizens of Madison County (Kentucky) were told at a public hearing on the Draft Programmatic EIS which took place in 1986 that:

> This is not your only opportunity to be heard; there are ways to be heard, by written submission, by paying attention to the process that the law requires us to follow here, in particular, taking note that a final statement of evidence, record, material, comments, positions and the like has not been prepared and will not be prepared until we have had all of that material to consider (Transcript: CSDP Public Hearing, 28 August 1986 p. 8).

The effect of employing predominant myths in the service of vested interests is one way of entrenching their power. It allows opponents of the stockpile destruction program to perceive the present problem as just a blip in an otherwise equitable system of checks and balances; it serves to secure the status quo because it forces people to be self-policing. It is inimical to any type of direct action as it makes this approach seem almost "unAmerican." "Working through the system," to borrow a phrase from the sixties, becomes an exercise in futility as the system works to absorb controversy in an endless round of bureaucratic procedures and regulations. The entire opposition movement is encapsulated and opposition is not so much crushed, as it is kept in its proper place---"channeled" into a cul de sac as it were.

Even among citizen activists, there are those who are unaware that they are being manipulated. Of course, this is clearly an example of the third

dimension of power, i. e., where people have internalized the controls even when it is not in their interest to do so. In such cases, people see what they want to see. They see groups of citizens proudly standing up for their beliefs against what they believe is a bad decision, what we have come to expect as the essence of democracy. They see the government making some concessions---again, democracy in action. What many fail to see, is that their range of choices is so constrained as to preclude any real practice in democracy. This was Marcuse's (1968) point exactly when he wrote, "The range of choice open to the individual is not the decisive factor in determining the degree of human freedom, but what *can* be chosen and what *is* chosen by the individual" (Marcuse, 1968, p. 7). This dichotomy between appearance and reality is reminiscent of Machiavelli who argued that it is important for rulers (or those who wish to maintain power) to at least create the *appearance* that the old forms have not changed.

Related to the myth that America is a *democracy* is the idea that the Army is subservient to Congress --- that Congress is the representative of the people against the encroachment of the military establishment, and furthermore, that Congress exercises real authority over the military. Even members of Common Ground/KEF (Citizen group from Berea, Kentucky) who generally hold a more skeptical view of the system, regard Congress as receptive to citizens' concerns. One activist expressed great faith in Congress and said that at one point the focus of their activity shifted away from the Army to Congress because they were able to obtain more information from Congress and because "Congress controls the purse strings."

In theory, Congress does control. However, in practice, it rarely works out that way. Save for annual decisions about appropriations, there is little

oversight according to knowledgeable sources. As a member of Congressman Hopkins' (U. S. House of Representatives) staff pointed out. In theory, he said, it is Congress that provides oversight and legislative {control}. .But he was careful to point out that:

> In reality, {there are} varying degrees of interest/oversight. What is involved is legislative control of activities of a department of three million people (the DOD) and three services, plus all sorts of committees. Clearly, when you see the scope of the Department of Defense (DOD), you can see why {*it is difficult to scrutinize the workings of the Army too closely*}.

Additionally, another factor has entered the picture of the modern state which clouds the issue even further---that of the ascendence in the power of lobbyists, which the framers of our constitution could not even have imagined. Comments from concerned citizens who had gone to Washington to observe the Congressional deliberations concerning the Chemical Stockpile Disposal Program when it was in its infancy, recall seeing "the suits'' (as they put it) in the gallery quietly observing the proceedings. They were sure these were lobbyists for the incinerator industry. Nevertheless, efforts to track down specific lobbying activities for the CSDP have proven fruitless, largely because reporting procedures are inimical to tracking down *who* gave *what* to *whom*.. (Although we understand that this is changing).

Nevertheless, as a general rule, the citizens who organized to oppose the Army's plan, believe fiercely in the ability of the system to change in respond to their pressure. Therefore, there is no need for the state to bring out its repressive forces, for as Parsons (1966) pointed out, "A power system in which the only negative sanction is the threat of force is a very primitive one which cannot function to mediate a complex system of organizational

coordination---it is far too blunt an instrument'' (Parsons, 1966, p. 260). Thus, perpetuating certain ideologies and playing upon myths is more effective in maintaining power processes. In this case, the myth that America is a *democracy* along the Jeffersonian model is very useful to the Army, for it engenders the notion of 'playing by the rules' and fosters cooperation with the complex NEPA procedures and regulations which the Army uses to its advantage. As they are fond of reminding the citizens who oppose the plan, "We will comply with the law.'' Our analysis is in harmony with Althusser's (1971) statist conception of power, where power is located in the state (as opposed to the people) and its various components, from the Armed Forces and the police to the schools and churches---called by Althusser, the 'repressive state apparatus' and the 'ideological state apparatus' respectively (Bocock 1986). If we are to know the limits to the power of the state we must understand the premises from which it derives its power. In the case under consideration, the Army's ability to call upon the enduring cultural myths is of vital importance in the maintenance of its power.

5.5.4 Hierophanies and Kratophanies

"To the place of the skull we have come.'' These were the opening lines from the script of a peace vigil (i.e., demonstration) which was held in Kentucky at the site of the Lexington-Bluegrass Army Depot on April 17, 1992. A small group of activists and sympathizers from the community stood around in the light rain outside the gate to the depot to give witness to their opposition to the proposed nerve-gas facility. Participants in the peace vigil placed paper cranes on the fence at the conclusion of the vigil as a symbol of hope and empowerment.

There are about 70,000 M55 "explosively configured" rockets stored at the Lexington-Blluegrass Army Depot (LBAD) (See Appendix E). The rockets contain the nerve agents GB and VX. The *igloos* (earth-bermed bunkers) are 90 feet long, 25 feet wide and 15 feet high. A local newspaper reported that "there are approximately 2,500 rockets stored in each igloo which is designed to be thinner on top so that if the rockets inside explode, the force of the blast will go upward, then fall back down into the igloo. The igloos are also placed far enough apart so that a blast in one will not detonate the rockets in another" (*Lexington-Herald Leader*, Tuesday, November 27, 1984, p. 1).

One could see no evidence of the huge military presence that afternoon. The igloos are not visible from the depot gate. They are stored in the central portion of the depot and are not visible from the depot fence. However, it was pointed out quite eloquently by one of the speakers that these igloos represent the Army's version of "sacred ground" as they are heavily guarded and hidden from view (to frighten off potential terrorists, we are told). They are modern-day *hierophanies* , i.e., manifestations of the sacred. In this case they would also be categorized as *kratophanies*---i. e., manifestations of power which are therefore feared or venerated (Eliade 1958). Kratophanies are simply another modality of the sacred ---one that inspires fear.

The phenomenon of *hierophanies* and *kratophanies* has been discussed quite eloquently by Mircea Eliade (1958) in his now-classic work *Patterns in Comparative Religion.* Hierophanies appear in many forms, he writes, "Everything unusual, unique, new, perfect or monstrous at once becomes imbued with magico-religious powers and an object of veneration or fear according to circumstances (for the sacred usually produces this double

reaction)'' (Eliade 1958, p. 13). Anything---any object or person---may become a hierophany, he explains and we can find examples of such things even among modern-day civilization. "We must get used to the idea of recognizing hierophanies absolutely everywhere,'' he writes, "in every area of psychological, economic, spiritual and social life'' (Eliade 1958, p. 11). A hierophany implies a more or less clear choice, a singling out. "A thing becomes sacred in so far as it embodies (that is reveals) something *other* than itself'' (Eliade 1958, p. 13). Durkheim (1915) too has described the quality of the sacred as "things set apart,'' "things forbidden.'' (We are reminded that the word *taboo*, a Polynesian word also means "sacred'' or "*sacré*''' in Latin.)

The igloos that house the "explosively configured'' lethal unitary chemical weapons at the Lexington-Bluegrass Army Depot certainly fit Eliade's description of kratophanies perfectly. These latter-day hierophanies inspire dread and fear because they contain some of the most lethal weapons of mass destruction ever created by man. (Recall that a drop of VX can kill a man in minutes).

The conceptualization of the Army's nerve gas igloos as *hierophanies* is directly related to the Third Dimension of Power. The presence of such phenomena contribute greatly---enhance enormously---the perception of power (and legitimacy) of the military, after all, the military are the *possessor* and the *guardians* of these weapons. They are the "experts'' in knowing how to handle them, store them, deploy them.

5.6 Gramsci's Concept of "Ideological Hegemony''

Without entering into an extended debate regarding the issue of whether or not there is a *ruling* or *dominant* 'class' in contemporary

American society, it is useful to look at Gramsci's concept of *hegemony*. which has relevance to our discussion. For Gramsci, hegemonic leadership involves developing intellectual, moral and philosophical *consent* from all major groups in a nation (Bocock 1986). Bocock (1986) points out that **"it is the sheer taken-for-grantedness of hegemony that yields its full effects**---the 'naturalness' of a way of thinking about social, economic, and political issues'' (Bocock 1986, p. 6). Forgacs (1988) comments that in Gramsci's prison notebooks the meaning of hegemony is qualitatively modified: "hegemony comes to mean 'cultural, moral and ideological' leadership over allied and subordinate groups. . .Hegemony in this sense is identified with the formation of a new ideological 'terrain', with political, cultural and moral leadership and with consent'' (Forgacs 1988, p. 423). Gramsci also insists that hegemony is dynamic {dialectic} i.e., "is characterized by the *combination of force and consent* variously balancing one another'' (VII.2. in Forgacs 1988, p. 423). The fact that hegemony is dynamic implies that it must take into account the interests and tendencies of subordinate groups. "In other words,'' Forgacs (1988) argues, "It presupposes an active and practical involvement of the hegemonized groups, quite unlike the static, totalizing and passive subordination implied by the dominant ideology concept'' (Forgacs 1988, p. 424). (Recall that maintaining citizens' *consent* is also a key component of Machiavelli's model.)

We will elaborate further on Gramsci's ideas regarding the dynamics of engineering citizens' consent in the next chapter which deals with Army propaganda. At this point the reader will excuse a minor digression while we pick up one thread of Gramsci's argument concerning the force/consent dichotomy. For this can be seen clearly in the Army's attempt to convince the

citizens that the elaborate concrete fortresses built to protect igloos which house these weapons of mass destruction and the concomitant security measures which have grown up around them, are for their protection---against "terrorists." As Sherman and Wood (1989) remind us, ideologies make use of social myths and one of the primary myths operative in this controversy is the belief that the elaborate security systems at the Depots are necessary "for protection against terrorists." Do these measures really make us more safe, or do they serve as legitimations for the Army's secrecy surrounding the production, use and stockpiling of weapons of mass destruction? And, what effect, if any, do these measures have on the willingness of opponents to attempt any form of direct action or civil disobedience? To answer these questions we must turn once again to the empirical data.

Speaking to an assembly of invited guests which included members of Concerned Citizens of Madison County (Kentucky), General Hidalgo made the following remarks at the Overview and Discussion Workshop held at the Tooele Army Depot (TEAD). Colonel Hidalgo opened his remarks by stating that "Special security measures preclude access to the grounds" (Hidalgo, Transcript TEAD CAMDS Overview and Discussion Workshop 1984, p. 122). This bare statement is a master stroke of understatement. During the course of that session, in an effort to reassure citizens about the safety of the stockpile, the General gave these graphic descriptions of the state'[6] attempt to secure the stockpile from untoward intrusion by "outsiders":

---

[6] We are using the word *state* here in the Gramscian sense. The state consists of the means of violence (the police and the armed forces) in a given territory, together with the state-funded bureaucracies, e.g., the several national laboratories.

> There is a 5,000 to 5,500 pound block of cement on steel spikes sitting in front of each door to an igloo (Gen. Hidalgo 1984, CAMDS Overview and Discusion Workshop,p. 123);

Later he described the proposed destruction facilities in terms of their structural integrity and their security against untoward intrusion:

> The building would be a three-level rigid frame steel building, which would contain steel reinforced concrete explosive containment areas within (Portion of transcript of proceedings of the Tooele Army Depot CAMDS Overview and Discussion Workshop, August 15, 1984, p. 87);

> The plant site would be approximately 11 acres in size. It would be surrounded by security sensors. Personnel would enter the site from this position,through a guardhouse which is called an entry control facility (Portion of transcript of proceedings of the Tooele Army Depot CAMDS Overview and Discussion Workshop, August 15, 1984, p. 87).

The reality of the inaccessibility to the stockpile sites is driven home quite clearly to anyone who has visited any of the Army Depots where the unitary weapons are stored and seen the signs posted on the Depot fence which warn: "USE OF MAXIMUM FORCE AUTHORIZED." One citizen present on that tour described her feelings as she toured the Tooele Army Depot's chemical destruction facility complex:

> Many hours on a bus, and miles and miles of driving. When I saw the guards with guns and wire, it all became real to me.

Is it any wonder that citizens are wary of attempting any kind of civil disobedience or direct action? With regard to this last point, early on in the

interview process (1991), leaders of citizen groups who oppose the Army's on-site incineration plan, voiced the opinion that some form of direct action or civil disobedience would not be ruled out somewhere down the line. There was talk of chaining themselves to the Depot fence. Presumably, they regarded this as a last resort if all else failed. One cannot escape the obvious conclusion that the Army has, through the use of carefully-controlled avenues for public participation, together with the implied threat of force (Gramsci's *force/consent* dichotomy), been able to forestall just this type of escalation. The Army continuously assured the citizens during this same meeting in 1984 that "the community and the state officials and the Army are *partners* in this decision. And indeed, we will be *partners* {emphasis added} in whatever decision is made'' (Gen. Bobby Robinson 1984, Transcript, TEAD, CAMDS Overview and Discussion Workshop, Salt Lake CIty, Utah, p.117).

The repressive forces in place at the Depots where the weapons are stored are a type of "insurance'' for the Army, against terrorists---possibly, but, surely, these repressive forces can be turned against opponents of on-site incineration as General Hidalgo's remarks about the security in place at LBAD make quite clear: "In answer to your question directly,'' he said: "Yes, I believe that at Anniston and at Lexington. . .I have personal knowledge that those forces are drilled, trained in every aspect and equipped to cope with a wide range of terrorists or dissident activities'' (General Hidalgo 1984, p. 123).

5.7 The Myth of Emergency Preparedness

In their efforts to gain community acceptance for the on-site incineration program, the Army has created a myth---The Myth of Emergency Preparedness. The Army argues it is prepared to handle the eventuality of an

accidental release of toxic nerve or mustard gas involving civilian population centers. (Here we are using the term "myth" in line with the common parlance---to refer to "illusion" or as we noted earlier "what cannot really exist"). The author having spent several years at a national laboratory working closely with various aspects of the Army's "grand emergency plan," i. e., CSEPP (Chemical Stockpile Emergency Preparedness Program), has seen firsthand how tenuous is the Army's claim that it can protect civilians in the case of an accident involving the release of nerve gas into a populated area.

Up until the last half of this century, "Civil Defense" usually meant protection against ordinary bombs (Keyes 1982). With the advent of nuclear missiles, an entirely new adjustment had to be made. During the fifties, school children were trained in drills to "duck and cover" under their desks as if this would afford any protection against the firestorm of a nuclear explosion which Larson and Michells-Cyrus (1992) humorously describe as "No worse than if a 500,000 ton baseball, hit on a line drive, were to strike your home." The creation of the nerve agents (i.e., nerve gas) pose even greater challenges in terms of adequate warning and protection against harm. Not only because they are among the most toxic substances known to man, but because they are colorless, odorless, and their presence---even in microgram amounts---can be deadly. Additional problems with protection against these agents involve the various routes to exposure. For not only can these gases be inhaled, they can also be absorbed through the skin; therefore, just donning a face mask is not enough protection. Additionally, unless the facemasks fits properly and are ready at hand, they are of no use at all.

Protection against the various agents that make up the unitary stockpile of chemical weapons is complicated by the fact that research in this

area is in its infancy. In 1989, the first systematic investigation of the effects of in-place sheltering as protection against chemical agent infiltration was undertaken at the Oak Ridge National Laboratory, in Oak Ridge, Tennessee (see Rogers et al 1990). The bulk of research that has been done by the Army regarding the human health effects of nerve and/or vesicant agents has been restricted to effects on young, healthy, males, under battlefield conditions. Complicating this already dim picture is the fact that the only known antidotes possess toxic properties of their own. Atropine, for one, is a hallucinogen, and its use is recommended only when agent exposure is relatively certain and then should be administered only by trained personnel (Rogers 1990). In a brilliant understatement, Stringer (1986) observes that "the measures employed to defend against chemical agents have unfortunately not achieved the quantum leap in effectiveness seen in the agents themselves'' (Stringer 1986, p. 11). Additionally, the Army has not solved the reentry problem, and research in this area is fairly recent (Watson and Munro 1990; Munro et al 1990; Munro et al 1991; Watson 1992, 1992, 1992; Argonne National Laboratory 1991; Daugherty, M. et al 1990; Halbrook, R. S. et al 1992; U. S. Department (HHS) 55 *Federal Register* 28940).

However, one of most troubling aspects in the entire oeuvre of designing protective actions for chemical agent accidents involves the short time available to warn the public. Data indicate that decision making among community officials would take 15 to 20 minuntes under ideal conditions (Rogers 1990). Rogers and Sorensen (1988) found that "even assuming better than ideal decion-making times of about 10 minutes in fast moving events, many people would be exposed before being warned'' (Rogers 1990, p.39). While the time of arrival of a toxic plume will vary depending on

meteorological conditions, the reader should be aware that, under certain conditions, it is possible for a toxic plume to arrive 3 km downwind in 8 minutes. Now, admittedly, this would not present the same need for rapid emergency response if it occurred on Johnston Island (JACADS) (the Army's only full-scale test facility) as it would be if it occurred in Berea or Richmond, Kentucky or in the Edgewood Area of Aberdeen Proving Ground (MD), nevertheless, it presents one of the most difficult problems in terms of protecting civilian populations from exposure to toxic gases.

5.8 The Creation of CSEPP: The Chemical Stockpile Emergency Preparedness Program

Public safety was uppermost in the minds of Congress when they funded the creation of CSEPP. As Public Law 99-145 stipulates, the destruction of the unitary stockpile of chemical weapons is to be carried out in accordance with "maximum protection for the environment, the general public, and the personnel who are involved in the destruction of the lethal chemical agents and munitions referred to in subsection (a)'' (PL 99-145, *The Department of Defense Authorization Act of 1986*, November 8, 1985, Section 1412, p. 99 STAT. 747). The Army's emergency preparedness plan for the Chemical Stockpile Distruction Program, known as "CSEPP'' (**C**hemical **S**tockpile **E**mergency **P**reparedness **P**rogram), grew out of this mandate.

In 1988, the Army asked the Federal Emergency Management Agency (FEMA) to cooperate in the design, development and implementation of CSEPP (Carnes, Garcovich and Shriver 1991). A memoramdum of understanding (MOU) was drawn up between FEMA and the DA (Department of the Army) in which FEMA assumed responsibility for off-post emergency planning activities. Subsequently, a Joint Steering Committee was

instituted to serve as a focal point and provide oversight for CSEPP. Six subcommittees function to support the emergency planning effort, they include: Planning Standards and Criteria, Reentry/Restoration, Training Exercises, Public Affairs, and Automated Emergency Management and Simulation Modeling.

Funding for CSEPP began in Fiscal Year 1989 with the Department of the Army originally committing $100,000 for each of the eight sites with chemical storage installations. As it became apparent that local communities were not prepared for the new responsibilities imposed upon them by the impending on-site incineration program, FEMA requested the Army to release an additional $820,000 during Fiscal Year 1989 to begin initial upgrades. Eventually, the CSEPP budget blossomed out to $27 million for Operations and Maintenance (O&M) and $5.5 million for procurement. (*CSEPP Update*: September/October 1991, p. 1-2).

According to the Army, CSEPP includes, "ten states, thirty-two counties, and at least five Federal agencies" (*CSEPP Update* 1991, p. 11) including, but not limited to: the newly-created U. S. Army Chemical Material Destruction Agency; DOD (Department of Defense); EPA (Environmental Protection Agency); FEMA (Federal Emergency Management Agency); the DHHS (Department of Health and Human Services) and numerous other state and local civil defense agencies as well as several National Laboratories (e. g., Oak Ridge National Laboratory, Argonne National Laboratory, etc.), as well as their subcontractors .

CSEPP is by far the largest *legitimation* for the Disposal Program. After CSEPP's funding began in 1989, the Army immediately contracted with various national laboratories (specifically the Oak Ridge National Laboratory

in Oak Ridge, Tennessee) to begin conducting research into various ways of protecting the public from an accident involving the release of chemical (nerve or mustard gas) agents resulting from disposal operations. CSEPP's very existence and its extensiveness are designed to support the belief that it is possible to adequately respond to a catastrophic accident involving the release of nerve/mustard gas involving a civilian population. CSEPP is like a giant octopus with tentacles penetrating deep into the local social structure of the communities adjacent to the stockpiled weapons. Its influence is both subtle and profound, and, as we shall see, is not limited solely to emergency response. It is the main propagandizing vehicle and the purveyor of the greatest myths, i.e., (1) that the process can be controlled; and (2) that the communities, with help from the Army, are prepared (or can be prepared in time) to cope with a major release of toxic nerve or mustard gas which crosses the Army installation boundary. Michael Reich (1991) discussed the dangers inherent in putting blind faith in new technologies which make the Army's reassurances appear unrealistic at best. He wrote:

> Often, society reexamines the application of new technology only after it is too late, after the device is thoroughly integrated into social institutions, after the device has produced a series of undesirable second or third-order consequences, or worse, after the device has caused a disaster and a body count.

The Army's emergency plan revolves around three principal protective actions: (1) in-place sheltering; (2) evacuation; and (3) respiratory protection. Of the three, evacuation seems to be the one most experts feel offers the most promise of saving the most lives in the "unlikely" event of a chemical accident relating to the operations of the disposal program; however, there are serious problems with relying solely on evacuation as the

method of escape. Depending on the wind speed, direction of the plume and atmospheric stability, it may be necessary for a great number of people to seek shelter *in place*. All methods for protecting the public depend on obtaining quick, reliable, information on exactly what has been released, which direction the plume is likely to travel and what quantity of agent has been released. In order to do this, sophisticated computer-generated atmospheric dispersion models have been developed.

5.8.1 Plume Dispersion Models:"*The Uncertainty Principle*:"

In terms of hazard prediction, researchers working on atmospheric-dispersion models (computer programs which predict how far a toxic plume will travel given certain parameters, e. g., meteorology, topography, etc.) for the Army have evolved some fairly sophisticated models. Research in this area has been going on at least since 1986 (Whitacre 1986) when the first of these models (D2PC) was developed by Army researchers at the Chemical Research and Development Center of Aberdeen Proving Ground, MD. The work has continued since then, first at Los Alamos National Laboratory (Yamada et al 1989) and at the Oak Ridge National Laboratory (Oak Ridge, Tennessee) where the current models were perfected and tested. However, even the experts who are involved in developing these models are guarded in their estimation of their effectiveness. One researcher whose work is highly respected in the field, speaking about ***P A E C E*** , (Protective Action Evaluator for Chemical Emergencies), which is actually a collection of FORTRAN programs designed to help the user in analyzing protective action scenarios, wrote:

> Uncertainty permeates the PAECE at every juncture: the dispersion model at best predicts the expected exposure within ± 50%; the decision-to-warn assumptions are based on limited cases; the receipt of warning is based on extrapolations and interpolations of limited data; public response is estimated based on a limited number of previous accidents; implementation of in-place shelter techniques is based on a limited number of trials. Although any one of these uncertainties may be estimated, the combined effect of these uncertainties cannot be estimated (Rogers et al 1990, p.91).

Even as late as the summer of 1992 when the author was engaged in writing a user manual to be used in conjunction with the latest version of these air-dispersion models, (PADRE) **P**rotective **A**ction **D**ose **R**eduction **E**stimator, there was still a great deal of tentativeness associated with their use (PADRE User Manual, June 29, 1992. Unpublished Draft). Traffic models (computer-generated models of traffic flow and patterns) developed in conjunction with evacuation scenarios, have also achieved a great deal of sophistication, taking into account time-of-day, one-way streets, population density, special events, meteorology, topography, etc. These models are used in conjunction with air-dispersion models and are designed to assist decision-makers in deciding upon possible evacuation routes. They employ a zone-based emergency planning concept, a well-known method for developing emergency plans (Carnes et al 1989). Basically, potentially-affected areas are divided into three zones: the IRZ (immediate response zone; the PAZ or protective action zone (an intermediate zone); and the PZ or precautionary zone. The IRZ is the zone in closest proximity to the threat, for example, it might be area within 3-10 km of a stockpile site (the actual distances may vary substantially, based upon the circumstances). The capability to implement the

most appropriate protective action(s) very quickly is critical within the IRZ, hence, warning times are critical. The PAZ defines an area where the available emergency response times and the hazard distances associated with them are sufficiently large to allow most people to respond effectively through evacuation; the PZ is far enough away from the hazard to allow sufficient time to both plan either evacuation or in-place sheltering.

5.8.2 "In Harms Way": Communities at Risk

The Army's probabilistic risk analysis (PRA) for the stockpile disposal program (GA Technologies 1987a, b, c, and MITRE 1987) identifies a whole range of possible accidents with potential "off-site" consequences related to disposal operations. Among those cited are storage accidents, transportation accidents, handling accidents, and plant operations accidents. Included in this risk analysis are catastrophic accidents caused by plane crashes into an igloo or an earthquake. The Army's risk analysis does not identify accidents with extremely low probabilities (less than 10^{-8}), or accidents resulting from acts of sabotage or terrorism (Carnes et al 1989). The focus is on catastrophic external events (earthquake,s plane crashes, etc.). However, the FPEIS (1988) does list some smaller accident scenarios involving possible everyday occurrences such as forklift accidents or accidents involving the transportation of munitons from storage to the destruction facility.

Although Army documents flatly state the the possibility for accidents resulting from disposal operations is extremely small and point to the low probability of catastrophic accidents, it should be kept in mind that even minor accidents of lesser magnitude could easily overwhelm local emergency responders. While the Army argues that the likelihood of an accident involving nerve or mustard gas is extremely small, one researcher involved

in studying protective actions wrote, "The universe of potential accidents relevant to the storage and disposal of the unitary chemical stockpile is very large'' (Rogers 1990, p. 67). Army people are firmly convinced that an accident is unlikely, and pooh pooh any attempt to alter the impression that the CSEPP can handle the problem of protecting the public. However, given the complexity of the process and the high toxicity of the substances involved, this is a calculated risk at best. The question remains, what is an *acceptable* level of risk and *to whom* is it acceptable?

Although it certainly is possible to exercise some control over what happens in the event of a chemical accident, nevertheless, it is very hard to predict (and thus to prepare for) the combined effect of several things going wrong at once. Perrow's concept of *system accidents* is particularly germane to the Army's chosen disposal technology and to the emergency plan now in place to protect the public. Perrow (1984) argues that most high-risk systems (such as the Army's reverse assembly thermal destruction system for the CSDP) have special characteristics beyond their toxic or explosive attributes that make accidents in them *inevitable*, even "normal.'' He calls these qualities: *interactive complexity* and *tight coupling*. When he speaks of interactive complexity, he is referring to the possibility of simultaneous multiple failures. He argues that we can prepare for and predict any <u>one</u> of these failures, however, we are not prepared for the simultaneous failures that are bound to occur. "This interacting tendency is a characteristic of a system,'' he states, "not of a part or an operator; we call it the 'interactive complexity' of the system'' (Perrow 1984, p. 4). Add to this mix the idea of tight coupling, i.e., the system works very fast and cannot easily be turned off, "the failed parts cannot be isolated from other parts, or there is no other way

to keep the production from going safely'' (Perrow 1984, p. 4). He argues that interactive complexity and tight coupling will *inevitably* produce an accident, thus, he feels justified in referring to them as *normal accidents.* He concludes with the statement that although system accidents are uncommon, even rare; this is not at all reassuring if they can produce catastrophes (Perrow 1984). He gives Three Mile Island and the grounding of the Exxon Valdes as examples of *normal accident*.s and argues persuasively that these were <u>not</u> caused by human failure as some have charged.

Looking at stockpile disposal from the standpoint of the destruction technology alone, a very frightening picture emerges. However, if one pulls back and takes a more global look, which takes into account all the variables relevant to emergency management (i.e., warning times, how swiftly a decision-to-warn is reached and communicated to the public, how quickly people respond to warnings, evacuation scenarios, meteorological conditions, population density, etc.), one can begin to question the Army's insouciance regarding the possibility of an accident as well as the capacity of communities to handle an accident. Where does that leave us? Despite the Army engineers' assurances about *redundancies* (back up systems) built into the technology, Perrow's (1984) work does give us cause to ponder, to question and, ultimately, to hold the Army and the various contractors accountable.[7]

---

[7] For an interesting discussion of liability with respect to the CSDP, read, "The Issue of Tort Liability and the Acquisition of Emergency Equipment: Impacts on State and Local Governments.'' p. 19 in Feldman, 1990, *Implications of SARA Title III for Community-Based Emergency Planning in the U. S. Army Chemical Stockpile Disposal Program: The Acquisition of Equipment.* ORNL/TM-11388. Available from the National Technical Information Service, U. S. Department of Commerce, 5285 Port Royal Road, Springfield, Virgnia 22161.

5.9 Summary and Conclusion:

We have surely not said all that could be said regarding the issue of how language and its use supports certain power relationships, nor have we fully explored all the multiple interconnections between myths, legitimations, and ideologies. Our goal was more modest: (1) To show the numerous efforts, both institutional and linguistic that infuse the Army's CSDP with its peculiar flavor and help to determine the course of its acceptance by those who oppose or support its aim; (2) To demonstrate how the modern 'state' approaches the problem of legitimizing its prerogatives to its citizens; and (3) To illustrate the efficacy of the controls available to the state.

We began this chapter speaking about the third dimension of power which involves investigating the various means through which power "influences, shapes or determines conceptions of the necessities, possibilities and strategies of challenge" (Gaventa 1980, p. 15). We have examined the various myths which help perpetuate the status quo decision of the Army. It should be noted that these various mechanisms (myths, legitimations, eupemisms of power) help shape beliefs about the "inevitabililtly" of incineration as the only "possible" choice and about the sacredness of "the process" as the only proper venue for asking questions. Thus keeping the level of dissent well within the bounds acceptable to the Army by portraying the issue of the destruction of the weapons as a purely technical problem, rather than as an exercise in power. In the next chapter we will take up the issue of propaganda and we will further develop some of the ideas touched upon in this chapter.

Chapter 6

Propaganda and the Chemical Stockpile Emergency Preparedness Program (CSEPP)

> 'We cannot assume today that men must in the last resort be governed by their own consent. Among the means of power that now prevail is the power to manage and manipulate the consent of men. That we do not know the limits of such power---and that we hope it does have limits---does not remove the fact that much power today is successfully employed without the sanction of reason or the conscience of the obedient.'
>
> C. W. Mills, *The Sociological Imagination (pp 40-41).*

6.1 The Third Face of Power--- Propaganda and CSEPP:

In the previous chapter we presented several examples of what Lukes (1974) describes as the third dimension of power in the form of myths, ideologies and legitimations employed by the Army in defense of its program of on-site incineration. Analyses of power often assume that the absence of grievances is evidence of concensus. However, the third dimension of power forces us to consider the fact that a concensus can be manipulated. Lukes (1974) asks,

> Is it not the supreme and most insidious exercise of power to prevent people from having grievances by shaping their perceptions, cognitions and preferences in such a way that they accept their role in the existing order of things, either because they can see or imagine no other alternative to it, or because they see it as natural and unchanageable (Lukes 1974, p. 24)?

In this chapter we will examine exactly how the state attempts to shape the perceptions of citizens to suit its own purposes. The Army's attempts to

influence how citizens defined the situation did not begin in any formal way that one could identify as 'propagandizing' until the citizen protest movement which started in Kentucky began to show appreciable gains at other, formerly quiescent sites. Then and only then, did we see the systematic development of propaganda on a national scale. It developed in concert with the Army's emergency plan known as the Chemical Stockpile Emergency Preparedness Program (CSEPP).

As the Army's major propagandizing device, CSEPP serves a dual purpose: (1) complying with the Congressional mandate to carry out the goals of the destruction program in keeping with the 'maximum protection of the public' (its *manifest* function); and (2) functioning as the major propaganda vehicle for the entire destruction program (its *latent* function --- in the sense of a "hidden agenda").

We argue that in pursuing its aim to site eight nerve-gas incinerators in the continental U. S., the Army has constructed an elaborate propaganda campaign. The campaign has several goals: (1) to enlist the cooperation of state and local civil defense personnel and to utilize the infrastructure of emergency response as a vehicle for "selling" the states on the program; (2) to prop up the Army's prestige and thus its credibility; (3) to make the idea of destroying the stockpile by incineration seem *inevitable,* i. e., the only *sensible* thing to do; (4) to create an aura of certainty surrounding "safety." That is, to establish the idea that the Army, in cooperation with state and local governments, is prepared to handle any catastrophic accident related to the destruction of the stockpile. Before returning to the empirical data, we will spend some time discussing some of the theoretical perspectives that have examined the phenomena of propaganda in the modern state.

6.2 The Nature of Propaganda

According to Lasswell (1950) propaganda consists mainly of political symbols manipulated for the control of public opinion. The definition requires that symbols be manipulated, that is, specifically introduced for their effect on public opinion. As Goebbels said, "We do not talk to say something, but to obtain a certain effect" (Goebbels 1935). As far as definitions are concerned, there seems to have been an evolution in the United States. From 1920 to 1933 the main emphasis was on the psychological: Propaganda consisted of the manipulation of psychological symbols having goals of which the *listener is not conscious.* While definitions of propaganda multiplied, American authors eventually accepted the definition given by the Institute for Propaganda Analysis and inspired by Lasswell: "Propaganda is the expression of opinions or actions carried out deliberately by individuals or groups with a view to influencing the opinions or actions of other individuals or groups for predetermined ends and through psychological manipulation" (Ellul 1965, p. xii). Lasswell (1950) added that propaganda relates only to controversial matters, not to those on which disagreement is excluded by the group. He notes that nothing is implied in the definition about the properties of the symbols themselves, but only about their *function.* "The symbols may be (and, of course, frequently are) sentimentalized, fallacious, irrational and so on" (Lasswell 1950, p. 14). Finally, Ellul (1965) agrees with Lasswell's definition of the goal of propaganda which he says is "to maximize the power at home by subordinating groups and individuals, while reducing the material cost of power" (Ellul 1965, p. x, footnote).

6.3 Military Use of Propaganda

According to Chomsky (1991), the first modern government propaganda operation began under Woodrow Wilson's administration (1916) around the time of the first World War. The Wilson administration was committed to war and had to do something to rouse the generally pacifistic citizenry; so it established The Creel Commission---a government propaganda commission. Within six months, the Commission succeeded "in turning a pacifistic population into a hysterical, war-mongering population which wanted to destroy everything German, tear the Germans limb from limb, and go to war and save the world'' (Chomsky 1991, p.9). There had already been a public relations industry in the United States where such things were pioneered. "This effort taught the lesson that state propaganda, when supported by the educated classes, and when no deviation is permitted from it, can have a big effect'' (Chomsky 1991, p. 9).

The use of public relations men and propaganda techniques on a huge scale dates from WWII (Cook 1962). At that time, the Air Force (then, the *Air Corps*) led the way. The Air Corps, "thirsted for equal status with the Army and Navy; it loaded its ranks with publicity men and pulled out all the stops in a propaganda campaign to glorify itself, its generals, its heroes, its potentialities---bombing alone could bring Germany to her knees'' (Cook 1962, p. 91). The pattern set by the Air Corps soon became the pattern for all the services. Every service began swelling its ranks with publicity staff devoted to the task of seeing that the American public got the correct perspective. "The growth of the publicity services as a result was spectacular'' (Cook 1962, p. 95).

This grandiose propaganda machine perfected by the military, was exercised on a grand scale for the first time in the postwar battle over

universal military training. Cook (1962) observes, "Its effects were insidious and far-reaching and helped to determine to a great degree the pattern of the world in which we have lived ever since" (Cook 1962, p. 97). He concludes his analysis with this trenchant observation:

> In the rabbit warren of the Pentagon, publicity branches and bureaus spread in octopus fashion. Each was designed to pluck a special nerve controlling a segment of public reaction. No media that was influential in creating and channeling public was overlooked (Cook 1962, p. 94).

In more recent times and in conjunction with the Chemical Stockpile Destruction Program, the Public Affairs Subcommittee ---part of CSEPP--- (CSEPP), has taken over this role. Cook (1962) argues that the American people have failed to recognize the full impact of the burgeoning propaganda mill perpetuated by the military. He avers that it portends nothing less than a radical shift in the basis of power in the United States. "The voting booth would be retained," he writes, "so would the democratic trappings of our society; but, increasingly, all the vital decisions would be influenced and predetermined by the uniform---by men whose professional judgment it would be positively unpatriotic to question" (Cook 1962, p. 91).

6.4 Characteristics of Modern Propaganda

According to Michael Parenti, "The first premise of propaganda in the United States is that it doesn't exist, that there is no propaganda from the established media and the government and that we have only 'information'" (Barsamian Interviews 1991). However, Ellul (1965) cautions that we must pay close attention to the relationship between 'information' and propaganda because propaganda's content increasingly resembles information. Ellul

(1965) argues that "a surfeit of data, far from permitting people to make judgments and form opinions, prevents them from doing so and actually paralyzes them. . . Thus the mechanisms of modern information induce a sort of hypnosis in the individual, who cannot get out of the field that has been laid for him" (Ellul 1965, p. 87). Furthermore, propaganda operates all the time, and its major dedication is to avoid any kind of confrontation regarding class struggle in the United States. Peterson (1992) observes that, "One of the goals of ruling class propaganda is to deny that it's class controlled" (p. 82). As Marx and Engles pointed out, they (the power holders) take their class interest and always try to represent it as the general interest. In the milieu of the technological society, Ellul (1973) argues that propaganda is simply the means used to prevent the State's prerogatives from being felt as too oppressive and to make people consent willingly with its world view.

6.5 Ellul's Propaganda Model: The State's Necessity

Jacques Ellul (1965) has fashioned a view of propaganda and a method of analysis that goes far beyond the conventional understandings on the subject. It is to Ellul's model that we now turn. He states that, "Propaganda is called upon to solve problems created by technology, to play on maladjustment's, and to integrate the individual into a technological world" (Ellul 1965, p. xvii). He maintains that propaganda is the Siamese twin of technological society. In his opinion, propaganda is needed for the exercise of power simply because the masses have come to participate in political affairs. "In order for propaganda to be so far-ranging," he writes," it must correspond to a need. The state has that need" (Ellul 1965, p. 121). Unlike other writers on the subject, he prefers not to give a definition. "I consider it more useful,"

he says, "to proceed with the analysis of the characteristics of propaganda as an existing sociological phenomenon'' (Ellul 1965, p.. xii). He flatly rejects as unrealistic all laboratory experiments that have been conducted with small groups to gauge the effectiveness of propaganda, noting that propaganda is a unique phenomenon that results, "from the totality of forces pressing in upon an individual in his society, and therefore cannot be duplicated in a test tube'' (Ellul 1965, p. vii), or as Henri Poincare once said, *"It is the scale that makes the phenomena.''*

Ellul (1965) argues that even Democratic regimes are driven into using propaganda because of the external challenges they face. In fact, he observes that the democratic State, precisely because it believes in the expression of public opinion and does not gag it, must channel and shape it. Furthermore, in a democracy, citizens must be tied to the decisions of the government. "This is the great role propaganda must perform," he writes. "It must give the people the feeling---which they crave and which satisfies them---to have wanted what the government is doing, to be responsible for its actions, to be involved in defending them and making them succeed, to be 'with it'''(Ellul 1965, p 126). In the case of the Chemical Stockpile Disposal Program, the U. S. Army is subject to external pressures from Congress, U. S. international treaty obligations, industry lobbyists, numerous government regulatory agencies, and residents of the communities in question.

Ellul (l965) observes that, "Propaganda must be seen as situated at the center of the growing powers of the State and governmental administrative techniques'' (p. xvii). Many people erroneously believe that it is the *kind* of state that makes the effects of propaganda harmful. To this assumption, he counters that this inherently pernicious process has the same effects when

practiced by a totalitarian regime or an allegedly democratic one. He argues that propaganda renders the exercise of true democracy nearly impossible. Propaganda as a phenomenon is essentially the same, he writes, whether practiced in China or the former Soviet Union or the United States or, for that matter, Algeria. He includes the newly-formed Public and Human Relations domain among the four areas that broadly cover the concept of propaganda. Others areas include purely psychological action, re-education and brainwashing, and psychological warfare. Although "disinformation" has also been mentioned as a component of propaganda, this is misleading in that, strictly-speaking, Ellul's model eschews the view that propaganda is concerned with disseminating lies or deliberate falsehoods. Rather, propaganda is concerned with truth, albeit a very circumscribed truth---half-truth, truth out of context. He notes that propagandists agree that lies must not be told *except* those that are completely unverifiable. For example, Goebbel's could lie about the successes achieved by German U-boats because only the captain of the U-boat knew if he had sunk a ship or not. (Ellul 1965, p. 55 footnote). Similarly, the Army *could* lie about the exact size of the unitary weapons' stockpile because this information is *classified* . Thus he writes, "Falsehood bearing on fact is neither entirely useless nor to be strictly avoided. Nevertheless, bear in mind that it is increasingly rare" (Ellul 1965, p. 55).

Ellul points out that social science has greatly enhanced the effectiveness and scope of propaganda. In fact, he argues that propaganda in the modern world would not be possible without it. "Without the scientific research of modern psychology and sociology," he writes, "there would be no propaganda, or rather we would still be in the primitive stages of propaganda

that existed in the time of Pericles or Augustus'' (Ellul 1965, p. 4). In fact he argues that Propagandists will inevitably have a better idea of how to utilize the fruits of these sciences than many practitioners. The Propagandist must first of all know the terrain on which he is operating. He must be able to gauge the current trends in public opinion, and he must tailor the message to the type of audience to be reached. To this end, survey research, demography and even the skills of qualitative field research can serve the Propgandist.

We wish to clarify at the outset our use of the term "Propagandist.'' In using this term, we do not wish to convey the idea that propaganda is the work of one individual. Rather, we are referring primarily to *organizations* that make propaganda ---not to individuals. A man standing on a street corner passing out leaflets containing his own opinion about a subject is *not* disributing propaganda. Organization is the *sine qua non* of Propaganda in Ellul's model, and the Army's vast bureaucratic network financed by the Pentagon has the necessary infrastructure to sustain such an enterprise. Because the Army's Chemical Stockpile Emergency Preparedness Program (CSEPP) involves three tiers of government (federal, state and local), it is perfectly poised to orchestrate an effective propaganda campaign on behalf of the CSDP that is capable of reaching a very wide and diverse group of potentially-affected parties and also quite capable of sustaining itself over time.

Ellul (1965) argues that propaganda has the following characteristics: (1) Propaganda is *sociological* as opposed to merely psychological in character; (2) Propaganda deals with simplification and repetition; (3) Propaganda is dialectical in nature and it must change according to circumstances; (4) Propaganda must be total. It must use every means available. (i.e., it is not

limited to the media as is the general conception); (5) Propaganda does not tolerate discussion. With respect to the latter, Ellul (1965) has argued that propaganda ceases when real dialogue begins. The following section presents a brief discursus on Ellul's characterization of modern forms of propaganda.

(1) Propaganda is *sociological* :

It is with respect to Ellul's (1965) insistence that propaganda is *sociological* in nature that, in our opinion, distinguishes Ellul's model from others. Rather than look at the discrete actions of either the propagandist or the propagandee (who is assumed to be a *passive* receptor) Ellul directs our attention to the interactive nature of the process and views it more as dialectic rather than as a one-way, top-down imposition of information. As Ellul (1965) describes it, the situation is actually the reverse of what we have come to believe. "There is not just a wicked propagandist at work," he writes, "who sets up means to ensnare the innocent citizen. Rather, there is a citizen who craves propaganda from the bottom of his being and the propagandist who responds to this craving" (Ellul 1965, p. 121). This perspective underscores his position regarding the sociological character of modern propaganda. For the individual, confronted with a dilemma throws himself in the direction of a propaganda that justifies him and thus eliminates one of the sources of his anxiety.

(2) Propaganda involves *simplification* and *repetition*::

Ellul states, "Propaganda dissolves contradictions and restores to man a unitary world in which the demands are in accord with the facts" (Ellul 1965, p. 159). This effect is achieved through the twin processes of *simplification*, and *repetition*---two of the characteristic processes of propaganda. These are

particularly salient concepts when analyzing the stockpile disposal program, which presents the penultimate politico/technological conundrum. Ellul (1965) writes:

> Without simplification, no public opinion can exist anyway; the more complex problems, judgments, and criteria are, the more diffuse opinion will be. Nuances and gradations prevent public opinion from forming; the more complicated it is, the longer it takes to assume solid shape. But in the case of such diffusion, propaganda intervenes with a force of simplification (Ellul 1965, p. 205).

Answers to problems become clear-cut, black and white (i.e., the Army says, "The stockpile is deteriorating and needs to be destroyed; "incineration is a safe proven technology," etc.). Thus, citizens facing the information overload presented by the complexities of the Chemical Stockpile Disposal Program are already predisposed to search for a ready anchor, and that anchor the Army is only too happy to supply in the form of its emergency preparedness program, i. e., CSEPP. Repetition figures prominently in this process as an aid to solidify positions after they have been articulated. Because propaganda is a slow, continuous process, not a "quick fix," repetition becomes an important element in keeping the "correct" line in full view.

(3) Propaganda is dialectical in nature:

The dialectical nature of propaganda also assumes that it must remain flexible and demonstrate an ability to change. Two examples drawn from the empirical data will serve to illustrate this point. First, we can see a marked contrast in the content of the Army's propaganda of the fifties and that of the eighties and nineties with regard to protection of the public from toxic chemicals. Early efforts were directed at showing off the various protective

apparatus designed to protect civilians from chemical warfare attack. For example, the U. S. Army Chemical Corps and the Office of Civil Defense Mobilization developed a gas mask constructed to resemble Mickey Mouse for children, which was displayed at the Andrews Air Force Base 1959 Armed Forces Day celebration (See Appendix E). More recently, Army propaganda excludes any mention of protective gear, e.g., you will not see the *baby bubble* for infants (see Fig. C3, p. C-14 in Rogers 1990), or the protective jacket and hood for children (see Fig. C2, p. C-12, in Rogers 1990). Current Army propaganda dwells almost exclusively on the safety of the process, the unlikeliness of an accident and the excellence of their emergency management plan, while all the time they may be glossing over a potentially even greater danger.

Additionally, Army rhetoric changed over the years in response to public opposition. At the early public meetings (1984) held to discuss the program, there was a great deal of talk about the "technical" aspects of the incineration process in the belief that "a little knowledge is a dangerous thing." The Army sponsored tours to their prototype facility in which they flooded participants with information regarding the technical aspects of the incineration process. However, realizing that this was not succeeding in quieting the opposition (in some ways it fed the fires of their skepticism), they changed the focus of their discourse away from the technical aspects *per se* to the emergency preparedness program itself as *the* "fail-safe" back up mechanism.

However, the dialectical nature of propaganda can be seen most clearly in the Army's response to the citizens in Maryland when in April of 1992, the Kent County Board of Commissioners published an anti-incineration

statement and divorced themselves and the county from CSEPP. They refused to accept federal (FEMA) money for enhanced emergency management related to the Chemical Stockpile Emergency Preparedness Program (CSEPP). A statement given to the Army from the Kent County group read: "We cannot, in good conscience and practice, continue to accept grant funds for a planning program that we believe is indirectly tied to, and coincides with, the Federal government's plan to construct a chemical weapons incinerator at APG" (*CSEPP Update*: May/June 1992, p. 4). The Army countered by saying that, "Maryland CSEPP is needed because of the threat that exists due to the presence of an aging chemical agent stockpile at APG. The means by which the stockpile is ultimately destroyed does not guide the Maryland CSEPP and it never will" (*CSEPP Update*, May/June 1992, p. 4). Citizens dispute the fact that CSEPP is not directly tied to incineration. Members of the Kent County group argue that the Army did nothing to mitigate the risk posed to the community by the presence of the chemical weapons prior to the disposal program. They like to point out that the cost of mitigating the risk of continued storage of the weapons would be far, far less than building a half a billion dollar incinerator facility.

A footnote to this episode has to do with the context for the opposition in Kent County, Md. Kent County has a population of about 17,000. There are 8,000 registered voters. In April 1992, 7000 persons from Kent County, Maryland signed a petition against the Army's on-site incineration plan for that site (APG) citing concerns such as the potential long-term health effects and the continued use of the incinerator.

The Army concluded from this experience that they had learned a "lesson" and that lesson resulted in their changing their approach.

"Maryland learned a difficult lesson," an Army directive lamented, "If we are to take a proactive emergency management message to the citizens, it must be generic emergency management and in no way linked to destruction of chemical weapons" (*CSEPP Update*: May/June 1992, p. 4). The dilemma over Kent County's recalcitrance caused the Army to do some soul-searching. Quickly on the heels of this experience, the Army Public Affairs Office at the Pentagon instituted sweeping changes in the way the Army presented emergency management materials (and thus the entire stockpile destruction program) to state and local emergency responders. Some of the changes the Army recommended include the following:

> All reference to CSEPP logo will be deleted from all public information documents. They've been selling people on the idea that CSEPP was just part of your regular, normal emergency preparedness program; the logo draws attention to the fact that CSEPP is separate and related specifically to the nerve-gas issue which the Army wishes to downplay for obvious reasons. (Field Notes: ORNL, July 13, 1992).

By July of 1992, however, Kent County was back in the program. What caused this radical about-face in the space of only two months? According to two informants, it was money --- lots of money. The money offered to the community jumped from $50,00 to $450,000. "It was hard for them to hold out," one informant said. The Army said something like, "We'll buy buses, radios, etc." For a poor rural community, this kind of money was difficult to turn down. Because the Army's emergency plan for Aberdeen Proving Ground centered largely on evacuation, Kent County, would need buses with which to evacuate its citizenry. However, there were conditions placed upon the Army when Kent County finally capitulated. They insisted that the

Army's on-site emergency management staff person desist from engaging in any public relations activities concerning the proposed incinerator.

4) Propaganda is total:

Although scholars such as Gitlin (1980) and Chomsky (1988; 1991) have contributed greatly to our understanding of modern propaganda techniques by analyzing how the mass media is used as a propaganda vehicle, mass media are only one part of propaganda. Ellul (1965) argues that propaganda must be total, in the sense that every means available must be used. Ellul (1965) writes that "the Propagandist must utilize all of the technical means at his disposal---the press, radio, TV, movies, posters, meetings, door-to-door canvasing'' (Ellul 1965, p. 9). Because, he agues, there is no propaganda as long as one makes use of, in sporadic and random fashion, a newspaper article here, a poster or a radio program there...Each usable medium has its own particular way of penetration'' (Ellul 1965, p. 10). He contends that, "the very fact that the effectiveness of each medium is limited to one particular area clearly shows the necessity of complimenting it with other media'' (Ellul 1965, p. 10).

The aim of the propagandist is to get as much saturation as possible to several discrete audiences; therefore, a mix of methods, strategies and techniques must be available. These may include movies, T. V., radio programs, interviews, appearances on talk shows, posters, flyers, news briefings, conferences, scoping meetings, door-to-door canvassing, feature articles in newspapers, Letters to the Editor, etc. Ellul (1965) writes that, "propaganda tries to surround man by all possible routes'' (p. 11). The Army has utilized all the above-mentioned methods---and then some--- in getting its message across.

To begin with, the Army's *CSEPP Update* (the newsletter sponsored by the Federal Emergency Management Agency (FEMA) and distributed widely to interested parties) contains a wealth of information on the Army's vast propaganda machine related to the Chemical Stockpile Emergency Preparedness Program (CSEPP). There is a regularly featured Public Affairs segment called, SUBCOMMITTEE HIGHLIGHTS, which reports on the latest media event or project related to Public "Education." For example, the May/June 1992 issue talks about a Communications Workshop that was part of a national conference. Numerous other public relations efforts are also mentioned. The editor reports that, "Expected to be competed by press time is the emergency management calendar materials for local reproduction; The Public Officials briefing materials have been sent into the field; Several States have requested assistance in public affairs plan development; Work is continuing on a national video and citizens' brochure" (*CSEPP Update*, May/June 1992, p 4). Another issue of *CSEPP Update* reports that "Successful Media Interviews" a primer on media relations for non-public affairs professionals, was distributed at both the National Conference (June 1-4, 1992, Huntsville, AL) and the Public Affairs Conference. "Other products in the pipeline," the editor boasts, "include the CSEPP Orientation brochure for the general public and press kits. In addition, the 'PIO Handbook,' a manual for public affairs professionals involved in CSEPP was distributed in September" (*CSEPP Update*, p. 11).

Evidence of an intensive campaign, which coincides with Ellul's (1965) conception of propaganda as "total," is buried in one of the government planning documents prepared by the Oak Ridge National Laboratory in support of the Army's plan to install alert and notification systems (i. e.,

warning sirens, etc.) at the various stockpile sites. The document entitled, "Guidelines for Conducting Public Affairs Activities in Support of Alert and Notification System Development, Installation and Operation" (FEMA, Final Interim Guidance, September 7, 1991). The document represents a massive public education effort to prepare people for the inevitability of on-site incineration and falls squarely into the category of the third dimension of power.

The Introduction to this report begins: "An aggressive public education campaign is an essential ingredient of the CSEPP alert and Notification system if the public is to understand and accept it" (p. 2). Ellul (1965) discusses the importance of public education as a form of 'pre-propaganda.' "The conditioning of minds with vast amounts of information already dispensed for ulterior purposes and posing as "facts" and as "education" (Ellul 1965, p. vi). In line with Ellul's (1965) contention regarding the role of "education" in the preparing the way for propaganda, the Army report states that, "Pre-emergency public education must complement and support other elements of the community's emergency preparedness program" (FEMA, Final Interim Report, September 7, 1991, p. 3).

Given Ellul's (1965) assertions that propaganda must be *total*, the report is in a sense a blueprint for the Army's propaganda campaign for the Chemical Stockpile Disposal Program. The report identifies various segments (i.e., target populations) and outlines very specific methods and strategies for reaching these audiences. The report is broken down into several parts each dealing with a specific topic area, e. g., Goals, Assumptions, Basic Vs. Enhanced Public Affairs Activities, Operational Concepts, Identification of Information to be Presented, Identification of Media, and then of course,

Standards. Finally, and in concert with Ellul's (1965) formulation that propaganda seeks to tailor its message to discrete audiences, we read: "The public education materials (brochures, television and radio spots, newspaper ads, public presentations, etc.) must be designed and disseminated to target audiences'' (FEMA, Final Interim Guidance,1991, p. 4).

Under the BASIC Public Affairs Activities, the following topic areas are listed: Army briefings; prepared news releases; attendance at media editorial board meetings; establishing a dedicated telephone line to receive public inquiries; establishing, maintaining and using mailing lists of persons with expressed interest in CSEPP; establishing information depositories for Alert & Notification/CSEPP program materials; drafting and issuing radio/ TV public service announcements; preparing and distributing information for special needs populations; developing and using RTQ (Response-To-Query), i.e., questions and answers regarding Alert & Notification issues.

Enhanced Public Affairs Activities include: developing materials to be included in local school curriculum; establishing and operating speakers bureaus; conducting community involvement activities (e. g., calendar art competition, mall demonstrations, county fair exhibits); developing promotional items for distribution at community fairs, malls, meetings; conducting specialized briefings for targeted opinion leader groups (e.g., medical, legal, political, educational, religious, agricultural, etc.) (FEMA: Final Interim Guidance: 1991, p.13). The Army will argue that this massive Public Education plan is necessary and that it has nothing to do with incineration; however, adding the tag, "in support of Alert and Notification'' in no way changes the hidden agenda for this program, which we argue is purely Public Relations designed to serve as a propaganda launching pad for the Army's

on-site incineration decision. As has been stated elsewhere, the Army's claim about the fragility of the stockpile has been greatly exaggerated. We know, for example, that at least at the Lexington-Bluegrass Army Depot (LBAD) the stockpile has been certified stable for at least 25 years. The claim that this mammoth public education effort is simply to secure Alert and Notification systems is spurious.

6.6 Army Propaganda Pieces

While the above-mentioned documents outline only a plan, the following sections will describe actually existing materials that are part and parcel of the Army's Public Affairs "project." In keeping with Ellul's (1965) dictum that propaganda must "surround man by every possible means," the following information is a chilling reminder of the vast resources available to the military to influence the public (FEMA: 1989-1992, A Proposal).

6.6.1 CSEPP Calendar

Of all the glossy four-color process "info" pieces the Army has developed for general consumption regarding the stockpile disposal program, none produced quite the stir among opponents of the CSDP as the 1992-1993 Madison County Emergency Preparedness Calendar. The calendar, distributed to citizens of the Berea/Richmond area at the site of the Lexington-Bluegrass Army Depot, caused quite a stir. The calendar itself is a visual delight, drawing cleverly on Berea's rich cultural traditions with gorgeous photographs of bucolic countryside, historic buildings, and lush flora. The inside cover contains maps and evacuation information and explains the various protective action zones, which are part of the grand

emergency preparedness plan. It also contains a glossary of terms, a drawing depicting the location of the new Emergency Operations Center (the "E-O-C") and a space on the inside cover to write in your own personal evacuation plan. The evacuation plan itself has been the center of intense debate among citizen opponents and seeing this piece cleverly distributed to area residents rankled even the most tacit observers of the program. Again, there is no way to evaluate the impression this calendar made in establishing the legitimacy of the CSDP. But recalling Ellul's (1965) dictum that propaganda must be total and must use every means available, the calendar is but one small example of the resources available to influence the population. Because the Lexington Bluegrass Army Depot was the site of the most intense opposition, a CSEPP calendar could be viewed as an easy way to soft-peddle the on-site incineration program to the unwary citizens of Madison County; but the calendar itself, does not constitute Propaganda; it is only a small piece of the pie.

6.6.2 "SRFX-91"- The Video

"SRFX-91"refers to the Army's training exercise, which was held in Tooele, Utah during the week of June 10-14, 1991 at the Tooele Army Depot. The exercise was designed to train the emergency managers and technical teams that would respond to an accident involving military chemical agents. This exercise was the seventh in a series of annual exercises held at Army depots across the country. SRFX-91, which stands for "Service Force Response Exercise," served as a pilot exercise for CSEPP, the Army's grandiose emergency preparedness plan. According to an issue of *CSEPP Update*, "The exercise included play by the State of Utah and Tooele County, Utah County,

and Salt Lake City, including the activation of their respective emergency operations centers. Exercise activity also took place at local care centers, medical facilities, and traffic control points to evaluate protective actions taken in communities near the depot'' (*CSEPP Update*: September/October 1991, p. 10).

In March of 1992, the Army released a video documentary on the exercise entitled, "SRFX-91: The Community Response.'' The video which lasts about 30 minutes, opens with a panoramic view of the areas surrounding the Tooele Army Depot (Tooele, Utah) and features the sounds of birds chirping prominently in the background. An Army's newsletter in describing the video boasts: "The finished product employs animated maps and other special effects as well as music and sound effects created electronically in the editing room'' (CSEPP Update: February/March 1992, p. 1).

The exercise was designed to test the metal of emergency responders in the area. However, the staged accident involved only mustard agent (Bear in mind that 42% of the stockpile is stored at Tooele, most of it is nerve gas). From what we could see, there was only one fatality. There was hardly enough drama to merit the hyperbole regarding the success of the exercise which emenated from the Pentagon. Additionally, there was no clock in the picture so one really doesn't get any information about elapsed time into the incident, which would be very useful information. But the most disturbing thing about the video, from the position of those who oppose the incinerator complex, is the portrayal of protesters outside the depot fence. Opponents were presented as "hippies'' clad in bell-bottom blue jeans and carrying signs (Certainly not the profile of citizens who comprise the opposition

movement.) And, of course, these were OUTSIDE the depot fence. There isn't even a hint of the massive military presence that is waiting in reserve, aside from warning signs on depot fences that advertise "Use of Maximum Force Allowed-Keep Out." And, of course, there was the typical interview of the "innocent by-stander" who says that he/she believes the weapons must be destroyed and that incineration is the way to go. Copies of this video were distributed to FEMA regions and CSEPP states. Copies were also made available to local governments.

6.6.3 Videos for the General Public

While the training video described above deals with a fairly specific, delimited area of the Army's overall emergency preparedness program, i. e., that of training experts to deal with a potential crisis, Army Public Affairs persons have been busy devising other types of videos intended for viewing by the general public. For example, CSEPP staff in Harford County, Maryland planned to introduce a video entitled, "Partners in Preparedness" to all high schools, middle schools, and 4th and 5th elementary school grades, as well as private and parochial schools (CSEPP Update: October/November 1993, p. 1). In addition, the Army plans to use the video in presentations to clubs and associations, for example, Lions Clubs, Kiwanis Clubs, and the Harford County chapter of the Association of Retired Persons. Harford County also plans to provide a copy of the video to cable television stations as well as the 11 branches of the public library. *CSEPP Update* reports that copies of the video were shipped to each CSEPP state (*CSEPP Update*: October/November 1993).

6.7 The Mass Media

Despite the media blitz that surrounded the issue of chemical weapons during The Gulf War, and considering its international ramifications, the destruction of the U. S. stockpile of unitary chemical weapons has received surprisingly little attention from the press. Except for a few notable exceptions, the national media (especially print media) has virtually ignored the topic of the nerve-gas controversy---the entire chemical weapons disposal program has fallen into a black hole of sorts. When the national print media has dealt with the subject, it has framed the subject as a NIMBY ("Not-In-My-backyard''--- a strictly local phenomenon); they tend to parrot the Army's imperatives about the necessity for destroying the stockpile. Whether this is by accident or design, the fact remains that the CSDP controvery has been largely ignored by the mainstream press (and, we might add, the alternative press as well). The Army has shied away from employing the media as its principal public education vehicle, although as noted previously, the Army Public Affairs Office at the Pentagon has prepared a handbook for use by Army professionals on how to deal with the media. The Army's posture vis-a-vis the press with regards to the CSDP appears to be one of maintaining a low profile. Opponents of the Army's plan lament this lack of attention arguing that reporters are ignoring what could be a Pulitzer Prize-winning story. As the co-founder of Concerned Citizens of Madison County commented, "This is the greatest David and Goliath story ever!'' Some of the notable exceptions include stories in *The Washington Post* and *The New York Times* (e. g., *The Washington Post*, May 8, 1986. "Maryland Officials Probing Aberdeen Chemical Disposal; ''*The New York Times* INTERNATIONAL, Tuesday, October 31, 1989 "An Oratory Fades, Obstacles to

Chemical Arms Pact Multiply.'') Articles have also appeared in *The Chicago Tribune, USA Today, The LA Times* and the *Savannah Tribune* according to citizen activists.

However, the local papers at the Lexington-Bluegrass Army Depot site (Kentucky) have been fairly good about keeping the issue before the public and representing the community's views fairly, with the possible exception of the *Lexington-Herald Leader* , which, according to activists, has been guilty of such things as under-reporting the number of people attending scoping meetings, not returning telephone calls, etc. The four local newspapers in the Berea/Richmond area include: *The Berea Citizen, The Richmond Register, The Lexington Herald Leader* and *The Courier Journal.* Between them they published no less than sixty-four articles in 1984 alone on the nerve gas issue--- more than one per week. By 1986, when a Congressional Hearing took place in Richmond, that number jumped to 220! Coverage has since tapered off considerably. However, there are still items in the paper at least bimonthly. (A sampling of headlines from the year 1984 appears in Appendix G-2).

Asked about their opinion of the media, citizens at LBAD believe that the media has helped. One activist commented, "They {i.e., the local press} have tried very hard to maintain objectivity. They always present the Army's point of view later---an editorial debate of sorts. In their reporting, they try to give both sides.'' According to this informant, "National news tends to be more objective---non-interested parties. They are not so educated on the issues as the local press. They don't have the breadth.'' However, all in all, activists feel the media has been a boon to the opposition. Another activist

from LBAD commented, "The media has been all important. . . What brought every single political person was the media (i.e., the local papers)."

Opponents of the Army's plan at other sites, however, paint a different picture of the role of the local media. Although we only have detailed information about the role of the media at LBAD, anecdotal information points to the fact that Kentucky's local press differs markedly from the local press coverage at other sites, which have more in common with the press coverage at Aberdeen Proving Ground (Maryland), where the local press seems to favor the Army. Activists at APG report that the local media was, "very cool, very conservative, very much in favor of the Army. Sometimes they try to be objective, but it always seems slanted towards the Army." The founder of Concerned Citizens for Maryland's Environment observed that, "reporters usually accept the Army's definition of the situation unquestionably when they say that continued storage is more dangerous than incineration." Nevertheless, there was once a good piece in the *Baltimore Sun* , and apparently the Evansville, Indiana newspaper did a scathing piece on emergency response in 1993 (CWWG Newsletter, March 3, 1993). Because these three sites: Kentucky, Maryland and Indiana have the most well-organized and vocal opposition movement, there is obviously some connection between level of mobilization and the media, at least at the local level. The exact nature of the dynamic is not well understood, but it may have something to do with social network ties (i.e., reporters ties to the community) or with the proactive attempt by activists to educate the media about the issues.

6.7.1 Broadcast Media

Although largely marginalized by the mainstream press, the nerve gas issue has been picked up by the broadcast media. Several major networks have picked up the story during the ten years that the controversy has ensued. The most famous of these, of course, is the segment done by CBS's "*60 Minutes*" news program which aired on January 5, 1992. The segment was called, "Time Bombs," and disappointingly, but not surprisingly, the segment regurgitated the Army's line about the dangers posed by the deteriorating weapons (hence the name *Time Bombs*)---specifically referring to the M55 rockets which are stored at LBAD. Although the television crew impressed activists at LBAD with their thoroughness, the program does leave one with the impression of the urgency attached to the demilitarization of the weapon. Again, this emphasis supports the Army's point of view.

In the early days of the controversy (November 29, 1984), CBS filmed a panel discussion featuring depot representatives (i. e., Army experts) and members of the Madison County Concerned Citizens group. Activists were interviewed by a "CBS Good Morning" crew including reporter Robert Pierpoint. On November 21, of that same year, the nerve gas issue was discussed on "ABC/TV Good Morning America." In 1991, Sebia Hawkins of Greenpeace Pacific Campaign appeared on a PBS television show called, "America's Defense Monitor," which originates in Washington, D. C. on station WHMM (Channel 32). In addition, Greenpeace has produced its own video on the chemical weapons controversy called, "Scrapping Chemical Weapons."

Overall, the media has not played a dramatic role in the Army's propaganda effort for the disposal program. Instead, they have placed heavy

emphasis on the Public Affairs function of CSEPP and, as we have stated elsewhere, CSEPP is perfectly poised to carry out this leading role.

6.8. The Committee for National Security (CNS)

In 1992, eight years after this controversy first began, a new entity entered the fray in the form of "The Committee for National Security," also known as CNS. CNS was created in 1981 as a direct reaction to the election of Ronald Reagan. It was started by Paul Warnke, an Arms Control negotiator in the Carter Cabinet. (Paul Warnke was head of the American delegation to S.A.L.T. when Carter was President.) CNS is staffed by retired military and government officials interested in Arms Control issues. It is based in Washington, D. C., and was started with foundation money. A knowledgeable source said, "They got together a few hundred thousand dollars {they were all well-connected}. Founders are all members of 'the power elite.'" A CNS Newsletter boasts: "CNS is made up of over one hundred men and women who are experts in various aspects of arms control and other national security issues" (CNS Newsletter, no date, p. 4).

6.8.1 Horizontal Propaganda

CNS represents a new form of propaganda, which Ellul (1965) describes as *horizontal* propaganda because it is made inside the group (not from the top). It involves using knowledge of group dynamics and human relations to overcome opposition and build consensus; its locus is the small group setting. It is a form of *integration* (as opposed to *agitation*) propaganda. Ellul (1965) argues that horizontal propaganda is very hard to make particularly because it requires so many instructors---but it is exceptionally efficient. "It is peculiarly

a system that seems to coincide perfectly with egalitarian societies claiming to be based on the will of the people and calling themselves democratic: each group is composed of persons who are alike, and one actually can formulate the will of such a group" (Ellul 1965, p. 84). "Progress is slow,'' Ellul (1965) writes, "there must be many meetings, each recalling the events of the preceding one, so that a common experience can be shared'' (p. 81). According to Ellul (1965) each individual helps to form the opinion of the group, but the group helps each individual to discover the *correct* line. "For miraculously, it is always the correct line, the anticipated solution, the 'proper' convictions which are eventually *discovered*'' (Ellul 1965, p. 81). All the participants are placed on an equal footing, meetings are intimate, discussion is informal, and no leader presides. (In Project Victory's *mediated dialogues*, leaders are replaced by *facilitators*.) Now let us return to the empirical data and analyze how this form of propaganda fits into the Chemical Stockpile Disposal Program.

6.8.2 *Project Victory*

Project Victory is but one undertaking of the Committee for National Security (CNS). It is a California-based "educational'' organization that offers workshops on conflict resolution and conducts dialogues on controversial public issues. The Executive Director says he was approached by the Director of the Committee for National Security (CNS) John Parachini, who had obtained a $10,000 Ford Foundation Grant to conduct research concerning the stockpile destruction controversy. CNS turned to Project Victory because of its interest in conflict resolution techniques. The Executive Director agreed to become involved in the chemical disposal controversy, and his first

assignment was to conduct a survey of the communities adjacent to the stockpile sites.

On the subject of the chemical weapons controversy, one informant said, "We take no position. We're not pushing incineration. We just want to help people work together more effectively." They reiterated their neutrality at the first meeting, at which time the Executive Director stressed that he was not working for the government, that he was independent from the government, and that they existed solely to conduct meetings in communities with knowledgeable people from both sides. They were neutral. "As far as we could tell," commented one participant, "they were." However, we find CNS's claim to neutrality suspect. As Schattschneider (1975) points out, "It must be assumed that every change in the number of participants is *about* something; that newcomers have sympathies or antipathies that make it possible to involve them. "By definition, *the intervening bystanders are not neutral*" (Schattschneider 1975, p. 4).

Project Victory's executive director has the squirrelly enthusiasm of a salesman who can't stop talking about his product because he truly believes in it; however, what he and his organization are really selling is sham democracy couched in the rhetoric of inclusiveness and citizen empowerment. Project Victory's rhetoric is flamboyantly "democratic" but driven by narrow speical interests. It is part of the new style of democracy which emanates from "K" street in Washington---the seat of public relations firms and "spin doctors" who utilize artfully constructed "opinion polls" and can corral experts at a moment's notice to support any particular position. The latest trend to emerge from this milieux are groups devoted to correct situations where citizens put up roadblocks to what they consider to be

undesirable governmental or corporate projects. "Mediation" techniques are fast becoming the new religion.

Ellul (1965) argues that the aim of modern propaganda is not to change ideas but to provoke action---to obtain an *orthopraxy*. The action that propaganda seeks is not individual but *collective*. One must be mobilized within the context of one's peers. The goal of collective action is the reason why Ellul (1965) sees *organization* as fundamental to propaganda, precisely because "without organization, psychological excitement leads to excess and deviation of action in the very course of its development" (Ellul 1965, p.29). Thus action must be integrated within the confines of a group. According to Ellul (1965) propaganda is not basically interested in determining the truth or falsity of dogmas, "it seeks instead, to unite within itself as many individuals as possible, to mobilize them, and to transform them into active militants in the service of an *orthopraxy*" (Ellul 1965, p. 97).

The idea of *praxis* (action) is central to Ellul's model, and indeed, Project Victory stresses the importance of participation. In their letter to "community leaders" they write: "I hope you will plan on being an active participant" (Letter to a Community Leader, Harford County, MD. June 1, 1992). Additionally, they encourage these "community leaders" to *educate* their friends and colleagues about the Chemical Stockpile Disposal Program. This is the orthopraxy that the Committee for National Security (and, of course, the Army) seeks and the reason the Army has allowed this group to go into the communities and tamper with the discourse surrounding this program.

Project Victory's *raison de etre* seems to be the alleviation of what they term, "the politics of gridlock," a catch-all phrase applying to recent grassroots opposition movements that have had a moderate amount of success at blocking the siting of hazardous waste incinerators nationwide. As their newsletter explains:

> As you know, we believe that to overcome the *politics of gridlock*, reflected in our current national and global crises, requires a fundamental shift in values and consciousness. All of our programs are directed toward helping to create this shift in the way we live our lives towards respect for self, others, community and Earth. (Project Victory Fund-raising letter, July 1, 1992).

While conflict resolution may indeed be their short-term goal for the Chemical Stockpile Disposal Program, CNS and Project Victory have more grandiose long-range goals, which call for fundamental change in the social structure. What this change portends is anyone's guess, but it has something to do with the way our democracy functions. To eliminate what they term "*the politics of gridlock*" caused by our "*national crises*" may in fact mean eliminating the messy aspects of a functioning democracy whereby citizens can become obstreperous with respect to certain governmental programs.

In calling for a "fundamental shift" in the social structure, one wonders what they have in mind to replace democracy? We aver that it is the politics of engineering consent that is real business of both CNS and Project Victory. The following few examples illustrate the type of work for which Project Victory is known: they conducted dialogues between environmental and corporate leaders in Silicon Valley on how to reduce toxic waste; they facilitated a one-day training in conflict management and effective communication for the University Lutheran Church in Palo Alto, California

in December 1991; in March 1992, the President of Project Victory, facilitated a one-day training session entitled, "Turning Conflicts into Mutual Gain." Finally, in 1992, they began work on a proposal to conduct a series of interracial Dialogues designed to reduce violence and racism.

Project Victory developed a technique known as "mediated dialogues" which it utilizes in an attempt to bring contentious issues to resolution by bringing together opposing parties, not in an open debate, but rather in a particular structured situation. Hence the term *mediated* dialogues, rather than simply *dialogues*. Their newsletter says:

> Project Victory's innovative 10-step model of Mediated Dialogue has been nationally acknowledged as a pioneering effort at true communication and creative problem-solving among people of divergent views. We use this model to address particular conflicts or issues in order to build consensus and generate win/win strategies (*Project Victory Newsletter*: July 23, 1992, p. 4).

The newsletter explains that the 10-step approach is intended for structured meetings while the more informal four-step approach (STOP, LOOK, LISTEN, DISCOVER) is used in less formal settings. The choice of the word "discover" is very interesting. For Ellul (1965) insists that in settings such as these, individuals are led to "discover" the *correct* line. In this case, that would be that incineration is the only real alternative for the disposal of these weapons. Project Victory's newsletter describes the program it conducted in Harford County, Maryland:

> Theo Brown used Project Victory's 10-step mediated dialogue process to facilitate a dialogue between two experts---one representing the Army's position that incineration is a safe technology, and

> one speaking for environmental groups who believe that a better method of disposal can be found. (Project Victory Newsletter, 1992, p. 3).

The writer pointed out that the dialogue identified areas of agreement and disagreement, "so that future discussion of this vital question can focus on the real areas of dispute" (Project Victory Newsletter, 1992, p. 3). Here is another curious statement. If the question of the safety of incineration is not the *real* issue, then what *is* the real issue? What *are* the real issues?

Finally, Project Victory's newsletter bears a logo which is strangely suggestive of a Christian cross, which may or may not be an attempt to play upon one of the dominant ideologies---the cross being suggestive of victory over death. The resemblance is probably not accidental. However, it is not clear what the "*Victory* " in *Project Victory* stands for, unless it refers to victory over *the politics of gridlock.* This less than subtle attempt to insinuate religious symbolism into a clearly secular endeavor leaves one with the uneasy feeling that there is more going on here than meets the eye. At any rate, it adds a curious flavor to their otherwise ordinary document.

6.8.3 *Project Victory* and "The Harford County Community Leader Dialogue Forum on Chemical Demilitarization" (Maryland)

An informant for Project Victory says he spoke with activists at six of the stockpile sites but had no success gaining entrance to the community around the Lexington-Bluegrass Army Depot in Kentucky. CNS and Project Victory spokesmen were summarily dismissed by the Citizen Groups around LBAD and the newly-formed Kent County, MD. citizens group did the same. However, they were able to gain a foothold in Harford County, Maryland---at the Aberdeen Proving Ground site. An activist at the Edgewood Area of

Aberdeen Proving Ground recalls her first encounter with representatives from CNS with dismay. Two members of this group came to her house saying that they wanted to act as liaison between the grassroots activists and the Army. She distrusted them. She commented, "If I receive any threats, I'm out of here." At first, she rejected the idea, but was pressured into participating by a local government official , who insisted that if she didn't attend, the citizen opposition group would appear to be a "fringe" group and would be discredited. She reluctantly agreed. She said the meeting was "by invitation only" and that about 30 or 40 people attended. They included local elected officials, a Chamber of Commerce representative, numerous educators, environmentalists and other civic leaders. "The primary goal of the evening," according to Project Victory's spokesman, "was to identify various aspects of chemical demilitarization of most concern to area residents." One participant (a high school science teacher) recalled that, "Ambassador Flowers (retired Arms Control negotiator) began the program by giving background information on the Arms Control treaties that have made chemical demilitarization necessary." This informant also recalled that Ambassador Flowers, although strictly speaking, not part of the debate, talked freely with participants during breaks about how safely the Army could destroy the weapons. Now recall that CNS insists on its neutrality in this debate; nevertheless, they have permitted this type of behavior contrived for its effect on the conscience of the participants. One participant described the meeting as follows: " {Public Relations Officer for the Army} was permitted to speak as well as several other 'Army experts.' The audience was invited to ask questions." The citizen activist herself was not permitted to speak nor to

rebut any of the Army's information. "I was only allowed to ask questions," she said.

A second community dialogue forum took place on June 16, 1992. The question discussed was: "Does the proposed on-site incineration of the mustard gas at Aberdeen Proving Ground pose a significant health risk?" Again, the same participants heard presentations, this time on the potential health effects of the proposed mustard-gas facility at APG. In a letter to a participant, CNS stated that the purpose of the second forum was to "clarify the confusion many feel when assessing the actual threat that chemical demilitarization plans pose to Harford County residents." Again, as if there were no real threat, but only a perceived threat. A third forum examined the issue of alternative technologies to destroy chemical weapons other than incineration. This meeting took place on August 3, 1992. It involved a presentation by two persons on opposite sites of the issue: Mr. Charles Baronian, Deputy Program Manager and Technical Director for the CSDP and Ms. Sebia Hawkins, Coordinator of Greenpeace's Pacific Campaign. The meeting consisted of presentations by each person and a question and answer session later in the program. The *facilitator* again acted as moderator.

Lest anyone have doubts about the efficacy of this type of program for shaping opinion, the following two statements were given by one of the participants we interviewed: (1) "We have agreed to eliminate our chemical stockpile with other European countries---that is the reason we had to get rid of the unitary stockpile;" (2) "It needs to be incinerated because this material has been there for 50 years. The chances are greater than transporting and incinerating it." Each statement contains a half truth. As Ellul (1965) points out, propaganda deals not with deliberate falsehoods, but with truth---half-

truth, and truth out of context. In this respect, we can examine these two statements in an effort to glean just how cleverly this process works. The first statement, made by a person who has a great deal of credibility in the Arms Control area, is true---but only half true. Yes, the United States does have international treaty obligations to destroy existing stockpiles of chemical weapons; however, timetables can be changed and have been altered in the past. The real reason for the destruction of the stockpile originally had to do with the Army wanting to get funding to build binary weapons, and in order to obtain this funding, Congress mandated the destruction of the unitary stockpile as a condition. This information was not conveyed to participants. What is particularly salient here is that this same informant observed that most participants in these workshops, although educated individuals, were not very well informed when they came in about the chemical stockpile destruction program, and therefore, were susceptible to suggestion. The material was presented to them in a very digestible form. The second statement is purely and simply the Army's prime legitimation for moving ahead with incineration. The idea is to portray alternatives to incineration as taking ten years before they could be perfected and at the same time, create a concern about the stability of the stockpile. Ellul (1965) has cleverly analyzed this technique and states that, "A large dose of fear precipitates immediate action; a reasonably small dose produces lasting support. The listener's critical powers decrease if the propaganda message is more rational and less violent'' (Ellul 1965, p. 86).

Many of the citizens who were asked to participate in "Project Victory's'' mediated dialogues were no doubt flattered to be asked, since ordinary Americans are seldom invited to participate in a personal way in the

larger debates, even by national civic organizations that presumably represent them. In a twisted sense, Project Victory's leader does what political parties used to do for citizens---he educates, he agitates and he mobilizes. The Army has nothing to loose by permitting CNS to meddle with the CSDP because they disclaim having anything to do with the mediated dialogues or CNS. However, Project Victory did obtain permission from the Army to conduct these dialogues in the stockpile site communities even though the Army did not actually pay for them. The nature of the dialogues as described in in interviews with participants, leaves the question of CNS's neutrality on the incineration issue open to question

It is difficult to assess the long-term impact of projects like "Project Victory." However, programs such as these are part of a national trend toward trying to find ways to build consensus through conflict remediation techniques in communities across the country where hazardous technologies are being questioned.

6.9 The Role of National Laboratories and the Control of Information

Lukes (1974) suggests that power holders need not resort to extreme measures to achieve thought control which is a third dimensional power relationship. He argues that, "One does not have to go to the lengths of talking about Brave New World, or the world of B. F. Skinner to see this: thought control takes many less total and more mundane forms, through control of information, through the mass media, and through the process of socialization" (Lukes 1974, p. 23).

Habermas (1976) supports this position. He argues that in the context of the Western democracies, social control of opposition is achieved, not by

outright repression, but by control of information (Habermas 1976). Chomsky (1991) has also spoken on the subject of information control and its implications. He says: "An alternative conception of democracy has been the belief that the public must be barred from management of its own affairs, and the means of information must be kept narrowly and rigidly controlled" (p. 8).

Control of Information figures predominantly in the exercise of power in the modern state. However, it takes many subtle forms. Information control is one way power holders attempt to shape the way a situation is perceived, and its use in the Stockpile Disposal Program is one which has received scant attention. However, it is easy to see why this aspect of power may have been overlooked. It is primarily because one of the features of the modern state and the hallmark of the Army's Stockpile Disposal Program is the production of *voluminous* amounts of information. This "information overload" is aided by NEPA regulations and compounded by the extensive data-gathering capabilities of the national laboratories and their subcontractors. Opponents of the Army's on-site incineration decision often complain about being overwhelmed by *too much information*, too many documents, yet another study, etc. So, how is it that we can suggest that control of information is not only employed, but effectively employed in the service of keeping only certain kinds of information circulating to the "official publics." As we shall see, despite the appearance of openness, the Army exercises tight control over what information "gets out" and the shape it takes when it does. The national laboratories play a significant role in this regard, but the Army always has the last word.

There is a curious paradox with respect to "information" and the public's right to know in a democracy. On the one hand, citizens demand being kept informed, and the government is supposed to be accountable to the people. Indeed, there are laws which explicitly mandate public disclosure of information (e. g., SARA Title III Superfund Amendments and Reauthorization Act of 1986, also known as the EMERGENCY PLANNING RIGHT-TO-KNOW Act of 1986). On the other hand, government has a stake in pursuing certain prerogatives. Ellul (1965) offers some insight into the rationale behind the State's desire to control information:

> Propaganda can never reveal its true projects and plans or divulge government secrets. That would be to submit the projects to public discussion, to the scrutiny of public opinion, and thus prevent their success (Ellul 1965, p. 59).

First, although few (if any) documents relating to the Chemical Stockpile Disposal Program (CSDP) or the Chemical Stockpile Emergency Preparedness Program (CSEPP) are classified, documents produced by the national laboratories for the Army are subject to a fairly rigorous and tightly-controlled distribution protocol. All documents go through various stages in the course of their development from conception to their final end-point distribution. They usually begin as DRAFT documents and/or "Preliminary Assessments," and as such as not intended for release or publication. Later, they may appear in FINAL DRAFT form, then move on to FINAL REPORT status---again, these remain strictly internal documents. At other times, documents receive tentative approval for distribution to officers in cooperating agencies for their review and comments. A later stage might involve distribution to certain "interested" parties and finally some documents are released as Technical Memorandums (TM) and are available

to the general public from the National Technical Information Service (U. S. Department of Commerce, 5285 Port Royal, Springfield, Virginia). Many documents relating to the Chemical Stockpile Disposal Program (CSDP) are available through this service for a fee. For example, the Army did release a series of "Concept Plans" (one for each of the eight sites), which described how the destruction program would affect each site, during the preliminary phases of the stockpile destruction program. However, these were very general in nature and not particularly useful as instruments of persuasion, although they did serve a purpose as legitimation devices for the Army. This is why we believe they were made available for public release. For purposes of information control, many documents deemed by the Army to be potentially sensitive, are kept in the DRAFT form for years---some as long as five years. Occasionally, we have seen documents stamped "Sanitized for Public Distribution." However, this is not the norm. Not all documents make it as far as public distribution, however, some do.

As stated earlier, the Army maintains tight control over the work produced by its contractors at the various national laboratories. With respect to the Army's stockpile destruction program, the Public Affairs Subcommittee (headquartered at the Pentagon), one of six subcommittees organized by the Federal Emergency Management Agency (FEMA) as part of the Chemical Stockpile Emergency Preparedness Program (CSEPP), is the bottom line about what information is released and to whom. For example, research staff at the Oak Ridge National Laboratory have been developing a training course for Emergency Medical Technicians (EMTs) and Paramedics which will contain job aids, video presentations, and computer-based modules. The Army routinely reviews all documents prepared by the staff of the national

laboratories prior to release. Research staff at the Oak Ridge National Laboratory (ORNL) were dismayed to discovered on one occasion that the Army had deleted entire sections of a document and replaced them with the words "To be developed''---or required drastic revisions. This practice became Standard Operating Procedure (SOP) and continued throughout the development of the Training materials. Sections that were deleted included: emergency medical services, reentry, etc. This practice continued to be an area of great concern to research staff who took their charge to develop plans to protect the public quite seriously. Someone speculated, "They may be worried that these sections will cause anxiety about the program and therefore, felt it was easier to leave it out.'' (Field Notes: ORNL, Staff Meeting, Hazard Management Group 7/13/92). This foot dragging is typical of the way power holders deal with sensitive information which could be potentially damaging to their case or could raise pesky questions about the real agenda. On another occasion, contractors working on Environmental Impact Analyses for the one of the sites in the destruction program were told that they could not communicate directly to state level emergency managers, but instead had to submit their questions in written form to the Army's Public Affairs officer for approval.

6.10 Summary and Conclusion

As C. W. Mills (1959) observed, we don't know the limits of the State's ability to control the thoughts of its citizens; however, Ellul's (1965) model of propaganda provides some insight into how the modern state goes about the task of engineering the consent of citizens. The fact that propaganda *surrounds* us, as Ellul (l965) points out, makes it very difficult to analyze it,

for we are confronted with a phenomenon and a force that is relatively new (at least in its present form) and ubiquitous. We have argued in this chapter, that the Army's emergency preparedness program (CSEPP) is a propaganda apparatus and have presented evidence of a vast, heavily-financed Public Relations ("public eduction") campaign directed from the Pentagon.

Chapter 7

Discussion and Conclusion

'The denizen of the technological state of the future will have everything his heart ever desired, except of course, his freedom.'
Jacques Ellul, *The Technological Society*. p. xvii

7.1 An Attempt at Synthesis

In this chapter we will attempt to draw together the various elements of this research which have hitherto been treated somewhat individually. To do this, we will try to answer the following questions: (1) What are the conceptual components of the work and how are they related; (2) How do they integrate into a conceptual system; (3) How does the work contribute to theory; (4) What are the limitations of the study; (5) What are the possibilities for future research in this area; (6) "What's To Be Done?!''

7.2 Conceptual Components and their Relationship

This research purports to call in to question the validity of the pluralists assumptions about political power in contemporary America where participation is assumed to occur within decision-making arenas, which are in turn assumed to be open to virtually any organized group. What is at stake is the whole question of power and how the State uses it to maintain its prerogatives.

We have employed the framework developed by Lukes (1974), who argues for a view of power that looks beyond the overt, obvious exercise of power proffered by the pluralists. His three dimensional view of power

stresses mechanisms and strategies of control that remain hidden unless brought to light in an analysis that takes into account what goes on behind the interstices of power --- precisely a Machiavellian concept.

In the case under consideration, the first dimension of power can be seen in the Army's decision over the choice of technology, which it announced in 1984. Following a pluralist methodology, we can only judge who is powerful by observing the "observable," i.e., by observing actual decisions in actual situations of overt conflict. In the absence of conflict, according to pluralist thinking, there would not be an exercise of power. Since pluralists characterize the situation as open and available to all, the absence of challenge is merely an indication of consensus. The major decision affecting this program was the Army's unilateral decision to destroy the stockpile through thermal destruction, i. e., incineration. However, since that decision was made in secret somewhere in the halls of the Pentagon, there was no "observable" conflict over that decision simply because people didn't know about it when it was being made. Are we to assume then, that no one objected? Judging from the public outcry after the decision was announced, we know the answer is that many objected. Needless to say, there *is* no observable conflict when decisions are made outside the bounds where people cannot do anything about it, so our analysis of power does not stop here.

The pluralists model takes no account of the fact that power may be, and often is, exercised by confining the scope of decision-making to relatively *safe issues*. The second dimensional view of power involves the erection of barriers to participation and control over issues through tactics such as agenda setting, "decisionless decisions," and recourse to existing biases of the system

or failing these, the creation of new barriers. The NEPA process, as we have demonstrated, creates formidable barriers for citizens who oppose government projects, despite the fact that it also provides entry points for opponents (citizen participation is a mandatory part of the law).

First, as we have argued, the entity who proposes the action is empowered to prepare the necessary impact statements. This alone precludes ordinary citizens from the process because tremendous resources are necessary to adequately prepare an EIS. The Army also engaged in a good deal of what theorists refer to as 'non-decision making' in the creation of the extra-legal NEPA steps described as the Site Specific Environmental Impact Statement (SSEIS) and associated the PHASE I and PHASE II processes.

The SSEIS debacle is only one instance of several where the Army used non-decision making to lull opponents of the plan into believing that someday, they would do what the citizens asked i.e., come down and conduct individual site specific studies and then re-evaluate the on-site incineration decision ---on a site-by-site basis. By adding these additional ("extra-legal") steps to the already-cumbersome NEPA review process, they created yet another formidable barrier to citizen participation, while at the same time appearing to comply with citizens expressed wishes. Time and again, the Army sought to short-circuit attempts to widen the scope of the conflict by delaying tactics, as was the case with the promises for site-specific studies and by "defining out" certain issues they did not wish discussed openly by publics, e.g., the dioxin issue, the continued use of the incinerators beyond the destruction of the stockpile, the long-term health effects of incineration, the decontamination issue, and, of course, the issue of *whether* to use incineration at all or some other alternative. Recall the FPEIS which defined

the three *alternatives* which the Army considered before making its on-site incineration decision: (1) national site; (2) regional site; or (3) on-site). In each case, the decision was about *where* to conduct the incineration, not *whether* to do it.

Finally, we come to what Gaventa (1980) describes as 'the least understood' mechanisms of power --- those of the third dimension. The Third Dimension has to do with how an entity (in this case, the Army) influences and shapes citizens' consciousness about the destruction program. It has to do with explaining how dominant groups create the impression that the status-quo is the only plausible reality and consequently attempts to reformulate the situation along lines more in line with subordinates wishes are not only undesirable, but also lacking in legitimacy.

With respect to the CSDP, we hear expressions of powerlessness coming from some unsuspecting sources e.g., not only do citizens feel intimidated and frustrated by the NEPA review process, but there is evidence that many state and local emergency managers are also exasperated in their attempts to deal with the new responsibilities being thrust upon them in conjunction with the CSDP. As one state emergency manager who had grown weary of trying to live up to Army expectations with respect to the CSDP said, "They are asking us to do things we cannot do" (Field Notes: November 11, 1991).

The Third Dimension of Power also relates to how the Army goes about creating the impression that incineration is the *inevitable* and only *reasonable* alternative. For this we turned to Ellul's (1965) theory of propaganda and we argued, that, quite clearly, the Army's emergency preparedness program is the vehicle for a massive propaganda campaign

designed to make the populace comfortable with the inevitability of incineration through complicity with the CSEPP program. In essence, the Army has exercised control over issues, manipulated the NEPA process, set agendas, controlled information, co-opted state and local leaders, used "selective incentives" to co-opt community leaders, and instituted a massive propaganda campaign in pursuit of its goal of siting eight nerve gas incinerators in the continental United States.

Finally, it should be noted that the success of the opposition movement in Kentucky, Maryland and Indiana is due, not to their participation in "the process," as laid out for them by the Army, but to their taking advantage of the one Achilles heel --- that of state control of air pollution control permits. The citizens, having exhausted all the avenues available to them via "the process" (i.e., NEPA scoping meetings, independent community review studies, site-specific reports, Congressional hearings, etc.), went directly to the state legislators in their efforts to forestall the construction of incinerators in their respective communities. Only then, did they achieve the necessary leverage to block the Army's inexorable march towards incineration. Although there are no state laws, strictly speaking, that forbid the construction of nerve-gas incinerators, the laws passed in these three states make it nearly impossible for the Army to obtain state permits for operating incinerators (Ember 1989, p. 20).

7.3 Limitations of the Study

As a research paradigm, case studies present certain limitations, not the least of which is their lack of representativeness. However, because of its scope, involving as it does three tiers of government as well as industrial

elites and at least half a dozen federal agencies, (including the military bureaucracy), we argue that this study has the potential to illuminate certain regularities and patterns of the social structure. Thus, despite the limitations of this study, its value lies in the ability to reveal previously hidden processes of power that are an integral part of the social structure of twentieth century technological society, particularly in the United States.

However, there are some obvious limitations which we will try to present in a brief synopsis. Admittedly, the present study cannot speak about the very important issue of why it took so long for sites other than the Lexington-Bluegrass Army Depot (LBAD) to mobilize. Unfortunately, although there is anecdotal evidence that the Army's reputation for power was responsible for the relative quiescence at many of the stockpile sites, we did not conduct a systematic investigation of this phenomenon.

We believe the relative quiescence at other sites (e.g., ANAD, PBA, TEAD, UMDA, PUDA) is related to the perception that the Army is "going to do what it is going to do,'' and to the hegemony enjoyed by the Army at those sites vis-a-vis the adjoining communities, many of these towns being very much under the spell of the Army because of the depot's prominence in the community as an important source of revenue and jobs. This is not true of the Lexington-Bluegrass Army Depot site however. The depot there no longer holds the importance for the community that it once did.

We lack any basis for comparing the sites with one another with regard to either the mobilization of protest or the role of the media in sustaining quiescence, nor can we evaluate the relative success or failure of the Army's propaganda campaign. Admittedly, there is ample room left for future researchers interested in grassroots mobilization surrounding hazardous

waste incineration and the variables involved in either quiescence or rapid mobilization. It will also be up to future researchers to determine if the patterns of power, which we have identified, are typical of the ones that prevail in society with regard to other conflicts of similar scope.

7.4 Reprise: General Theoretical Import

We have argued that the Army has been able to put up formidable barriers to participation, despite citizens efforts to widen the scope of issues to be considered. In order to level the playing field (if this is even possible), one of the problems facing us is the vast scope of power exerted by industry on the government (i.e., Congress and certain federal agencies). For example, Freudenburg (1984) writes that, "Industry's success in forcing the EPA to see itself as a 'neutral' judge of the various positions, rather than as an advocate for the people --- its legal mandate --- is one measure of its immense power'' (Freudenburg 1984, p. 64). Coupled with the co-optation of the EPA (i.e., the Environmental Protection Agency) we have the problem of the corruption of NEPA (The National Environmental Policy Act of 1969), particularly, the scoping process which has been turned into a tool of the powerful, where, although the "letter'' of the law is fulfilled, its spirit is egregiously violated, to make matters worse, we have the added feature of a powerful entrenched bureaucracy spewing out propaganda directed at creating a climate more conciliatory to dominant interests ---*the engineering of consent*- --- on an unprecedented scale which goes largely unrecognized as such, but hides under the guise of public "*education*'' and which denies its true class-based nature.

Finally, we come face to face with the limitations of science as a tool for solving environmental health problems. Freudenburg (1984) cautions that the relationship between science and politics is important and he reminds us that during the Love Canal debates, "Every scientific finding became the subject of controversy. . .scientists who studied health problems near the dump site disagree profoundly on the ill effects of that exposure'' (Freudenburg 1984, p. 58). Similarly, in the case of the Chemical Stockpile Disposal Program (CSDP) experts appeared on both sides of the controversy. On the one hand, we have Army experts testifying to the alleged "safety" of the incineration process, and on the other hand we have credible scientist/scholars testifying to the unremitting dangers associated with incineration --- both short term and long term.

There are parallels here too with Parenti's (1970) Analysis of the Newark Community Union Project (NCUP) rent strike and traffic-light issues. The rationalizations used to defend the government's actions with respect to the traffic-light issue, are very similar to those employed by the Army in conjunction with the stockpile disposal program: (1) the insistence that the problem needed elaborate investigation; (2) the claim that the issue was not within a given authority's jurisdiction, or that this was not the correct time or place to raise certain issues; (3) the posing of rigorous and time-consuming legalistic procedures; (4) the ritualistic appearance of a public official to investigate the question followed by disingenuous promises that a solution was at hand; (e.g., the National Academy of Sciences numerous "independent'' studies of the problem); (5) and the constant admonition that the protesters should exercise restraint and patience (Parenti 1970). For example, the Deputy Program Manager and Technical Director once called for

"common sense'' to prevail at Aberdeen {APG} (*Harford County Sun*, Sunday, August 11, 1991, p. 7).

The situation facing us is described succinctly by William Greider (1992) in his book, *Who Will Tell the People.*, Greider (1992) argues that American democracy is in much deeper trouble than most people wish to acknowledge. If communities now feel distant from Washington, it's because they are, he writes. He argues that we are experiencing a new kind of democracy --- "the new politics,'' he calls it. We are seeing what he describes as:

> the expensive politics of facts and information. Only those who have accumulated lots of money (typically major corporations) are free to play in this version of democracy. Only those with a strong, immediate financial stake in the political outcomes can afford to invest this kind of money in manipulating governing decisions (Greider 1992, p. 35).

Greider doesn't offer any real solution to these dilemmas other than to state that people must come together and fight to retain power. However, indications are that even this kind of "coming together'' or citizen empowerment is going to come upon some formidable obstacles under the present system. As Parenti (1980) points out: "Far from the fluid interplay envisioned by the pluralists, the political efficacy of groups and individuals is largely determined by the resources of power available to them, of which wealth is the most crucial. . .those who control the wealth of society enjoy a persistent and pervasive political advantage'' (Parenti 1980, p. 304). Needless to say, the military has great wealth as do the major corporations that have now turned from making bombs to the business of building incinerators to destroy existing munitions.

Parenti (1980) argues that some of our liberal elites believe our problems can be solved within the present system, simply by changing our "warped priorities." He argues that, "the political system will belong to the people only when the resources of power belong to them, enabling them to effect their democratic will at all levels of private and public institutional life" (Parenti 1980, p. 319). Given this caveat, Parenti doesn't hold out much hope for structural change within the present system. He concludes that people will not discard the present system no matter how it oppresses them until they can conceive of an alternative that would be better. "It is not that they don't want things to change, but they don't believe things *can* change --- or they fear that whatever changes might occur would more likely be for the worse," he writes (Parenti 1980, p. 322).

If we have learned anything from this research it would be that our taken for granted assumptions about the nature of our democracy must be re-examined in light of the evidence that we are in the midst of a shift in the balance of power away from traditional views of what a democracy is. Whether a constitutional amendment for the environment, as some have suggested (Caldwell 1989), would effect any significant change in the trend away from citizen control of the government, is a moot point. It doesn't appear such an amendment is in the offing. The recent successes of grass-roots environmental groups in preventing the siting of hazardous waste incinerators could be construed as a ray of hope or a window of opportunity toward greater citizen empowerment. If this study can shed some light on the political climate within which the citizens of the twenty-first century must labor, perhaps we have made a contribution.

7.5 Stockpile Activities Update: (May 1995).

The Army is steadfastly sticking to its guns with respect to incineration. As recently as August 1994, the Executive Program Manager for Chemical Demilitarization wrote that, "Both the Army and the NRC agree that no alternative technology is currently available to replace the liquid agent incinerator" (Letter: Walter L. Busbee, Brigadier General, U. S. Army, Commander/Director to Mr. John E. Nunn, III, Co-Chair Governor's Commitee on Alternative Technologies, August 19, 1994, p. 3). Since that time, General Busbee has been reassigned and a number of key players in the drama have retired.

Activists report that gigantic strides are being made at the Army research laboratory at Aberdeen Proving Ground, MD. involving the development of alternative technologies---particularly neutralization involving the most lethal of the nerve agents VX and the vesicant mustard. Additionally, activists report that on a recent visit with individual Congressmen (March 27, 1995) attitudes had shifted somewhat and many seem to be asking opponents of the plan for a "road map" a way out of the CSDP conundrum. (Personal Communication: Executive Director KEF, Inc. 5/4/95). (The CSDP has been subject to huge cost overruns and is now not very popular with the conservative Congress).

With regard to the current status of the citizen opposition movement, it breaks down by site in the following manner:

Cluster I:

TEAD	(Tooele, Utah)	Facility built and undergoing testing. Appeal of permit pending.

Cluster II:

APG	(Aberdeen, Maryland)	Nothing built yet; opposition strong
LBAD	(Richmond, Kentucky)	Nothing built yet; opposition strong
NAAP	(Newport, Indiana)	Nothing built yet; opposition strong
PUDA	(Pueblo, Colorado)	Nothing built yet; opposition strong
UMDA	(Umatilla, Oregon)	Nothing built yet; permitting process underway; opposition strong
Cluster III:		
ANAD	(Anniston, Alabama)	Nothing built yet; permitting process underway; opposition movement gaining momentum.
PBA	(Pine Bluff, Arkansas)	Nothing built yet; opposition movement still weak

The sites in the southern states are, not surprisingly, were the last to organize and are receiving assistance in this regard by individuals from the more vocal sites. Much of the delay is likely the result of a combination of factors: (a) the Army's reputation for power in the communities adjacent to these sites; and (b) their rural character. At Alabama, organizers of the opposition are considering law suits charging environmental racism. Residents of Pine Bluff are predominantly black and activists charge that this population has been largely ignored by the formal NEPA procedures.

7.6 "What Is To Be Done?"

In a recently released report prepared by the Battelle Corporation (1994), Bradbury et al analyzed community viewpoints of the Chemical Stockpile Disposal Program and came to the following conclusions: They argued that "it is increasingly evident that public protest over "risk" technologies is not only about technology, it is also, and perhaps mostly, about people and

human relationships'' (Bradbury et al, 1994, p. 1.5). This agrees with our own premise as stated in the Introduction, that the controversy surrounding the destruction of chemical weapons is not primarily a technical controversy, but is essentially a political problem ---i.e., it is concerned with power.

One solution regarding 'what's to be done' is proposed by Michael Reich (1991) in *Toxic Politics*. He writes that one alternative to government regulation of industry is to depend on industry's self-regulation (Reich 1991, p. 278). He dismisses this proposal almost as quickly as he suggests it, and concludes that "such proposals, however, are not likely to be well received in corporate circles'' (Reich 1991, p. 278). He then suggests that various policies could be adopted to insure that companies pay the cost of redress. Again, not a proposal likely to succeed. Reich (1991) points out that increased regulation, of itself, will not accomplish the goal of alleviating the present crisis. He notes that "conceivably, all the companies in our cases could have been in compliance with TSCA and RCRA (Reich 1991, p. 278); new regulations without enforcement will accomplish little.

Feldman (1991), one of the most articulate writers on public policy, has described his suggestions for reformulating public policy in his book, *Water Resources Management: In Search of an Environmental Ethic*. He writes:

> An optimal public policy would maximize the range of alternatives under consideration and provide lucid, scrutable information about all alternatives. It would hold policy makers accountable for the consequences of their decisions and would assure adequate time and methods for deliberation about all relevant social goals (Feldman 1991, p. 15).

If we were to follow his advice, we might be paving the way toward developing an environmental ethic that would help avoid the pitfalls created by the present *un-regulatory* climate. Dr. Feldman (1991) suggests that

ecofeminism might provide a useful paradigm for the development of such an ethic. Ecofeminists place heavy reliance upon: (1) examining the long-term consequences of environmental impacts; (2) self-management and direct democracy; (3) open decision-making, with full and free discussion of all available alternatives, stemming from the conviction that the dynamic processes of change and growth necessitate the free flow of information (Merchant 1981).

Feldman (1991) calls for a reemphasis on "process," but it is precisely this emphasis on "process" as opposed to "substance" that has allowed the abuses of power such as we have described, to creep in. Under the present system, the Army has made a fetish of "process." Broadening public participation in the political process, in and of itself, is not the answer either. The Army was quick to point out that the citizens were *empowered* to participate in *the process.*

As we mentioned earlier, Lynton Caldwell's (1989) answer is a constitutional amendment for the environment. Perhaps this is the answer, but we have doubts about the possibility of such a proposal altering the status quo. The answer, if there is one, lies somewhere in the realm of generating alternatives to the present politico/economic arrangement. Alternatives that combine the high idealism of the ecofeminist perspective with ones that embody real choice and veto power by publics, and real consequences for would-be polluters.

However, most promising of all is a concept that has already been tried in Denmark. In answer to the question, "Can everyday folks play a constructive role in complex decisions involving science and technology?"

The Danish model seems to answer a resounding YES! The model, described by Sclove (1994) is referred to as the "Consensus model." As he describes it:

> In 1992 a panel of ordinary Danish citizens attended two background briefings and then spent several days hearing diverse expert presentations on genetic manipulation in animal breeding. After cross-examining the experts and deliberating among themselves, the lay panel reported to a national press conference their judgment that it would be "entirely unacceptable" to genetically engineer new pets but ethical to use such methods to develop a treatment for cancer. Their conclusions influenced subsequent Parliamentary legislation.

In order to institute such a program, the Danish government's Board of Technology (an institution roughly akin to the U. S. Office of Technology Assessment) begins by selecting a salient topic and then advertises in the newspapers for volunteers. These volunteers are asked to send in a one-page resume detailing their background and explaining why they are interested in a particular topic. About 15 lay persons are chosen to serve on panels. According to Sclove (1994), "These are genuine lay groups ranging, say, from college-educated professionals (but excluding professionals in the topic under consideration) to housewives, office and factory workers, or garbage collectors" (Sclove 1994, Memo, p. 1). Next a separate panel is assembled consisting of people with varying levels of expertise with the particular technology. A final step is bringing these two panels together in what is termed a "Consensus Conference," ---a three-day event bringing the lay and expert panels together in a forum open to the media and the public at large. Sclove (1994) reports that Danish businesses, once skeptical have openly embraced the idea of a "Consensus conference," as being useful in forestalling

the more common types of gridlock encountered when communities resist projects involving hazardous technologies.

However, adopting this model to the United States will not prove easy. Even though the panels' decisions have often been adopted by the Danish Parliament, this doesn't guarantee the concept would have the same impact here. In the first place, the decision of the "Consensus Conference" is not binding. The panels are only advisory. We have already witnessed what can happen when the conclusions drawn by citizen advisory panels (for example, the Army-funded Community Study Groups for the CSDP) go against vested interests. They are summarily ignored. The Danish model does show promise, however. It suggests a structure within which citizens can perform the duties incumbent upon citizens who live in a democracy. It is perhaps a beacon for the future.

List of References

List of References

Abowitz, D.A. 1990. "Sociopolitical Participation and the Significance of Social Context: A Model of Competing Interests and Obligations." *Social Science Quarterly* 71 (Summer): 543-566.

Adams, Valerie. 1989. *Chemical Warfare, Chemical Disarmament: Beyond Gethsemane*. London: Macmillan.

Ad Hoc Advisory Committee. 1969. National Research Council. *Report of the Disposal Hazards of Certain Chemical Warfare Agents and Munitions.*

Akara, Moanikeala. 1990. "The Living Water of OHA." (Journal) Office of Hawaiian Affairs, Volume 7, July 1990.

Albert, Michael. 1992 (January). "Conspiracy?...Not!?""*Z" Magazine* Published by: The Institute for Social and Cultural Communications, Boston, MA.

Allison, G. 1971. Essence of Decision: Explaining the Cuban Missile Crisis. Boston: Little,Brown.

Althusser, Louis. 1971. "Ideology and Ideological State Apparatuses." (Ed), *Lenin and Philosophy and Other Essays* (pp. 127-186). New York: *Monthly Review Press*

Ambrose, Record of Decision (ROD) 1988. Chemical Stockpile Disposal Program (January) Office of the Undersecreary, Washington, D.C.

Ambrose, J. R. 1988. *Record of Decision*: Chemical Stockpile Disposal Program, Department of the Army, Under Secretary of the Army.

Anderson, F.A., Kneese, P. Reed, S. Taylor, and R. Stevenson. 1977. *Environmental Improvement Through Economic Incentives.* Johns Hopikins Press: Baltimore.

Annual Status Report on the Disposal of Lethal Weapons and Material. December 15, 1993. U.S. Department of the Army and the Department of Defense (DOD) in response to Title 14, Part B, Section 1412 of the 1986 Defense Authorization Act and Section 171 of the 1991 Defense Authorizatin Act.

Apt, Kenneth E. 1988. *Chemical Warfare Arms Control: Issues and Challenges.* Los Alamos National Laboratory.

Apter, David E. (Eds). 1964. *Ideology and Discontent*. New York: The Free Press.

Apter, David E. 1974. *Three Varieties of Pluralism.*. New York: St. Martin's Press.

Arblaster, Anthony. 1987. *Democracy.* Minneapolis: University of Minnesota Press.

Argonne National Laboratory. 1991. *Recovery, Reentry and Restoration from a Chemical Weapons Accident or Incident: A Concept Paper on Offpost Planning and Preparedness.* Department of the Army.

Arms Control and Disarmament Agency, U. S. Draft Convention on the Prohibition of the Development, Production and Stockpiling and Use of Chemical Weapons and on their Destruction. 1992 Extracted from CD/1173, Dated September 3, 1991.

Arms Control and Disarmament Agency, U. S. 1993. *Press Release.*: France to Host Signing Ceremony for Chemical Weapons Convention. Washington, D.C., January 5, 1993.

Arnold, Thurman. 1935. *The Symbols of Government.* New Haven: Yale University Press.

Aroesty, Jerome. 1991. *Comments on Implementation: Contingency Options for Chemical Weapons Demilitarization.* Boston: Rand Corporation.

Arms Control and Disarmament Agency, U. S. *Draft Convention on the Prohibition of the Development, Production, Stockpiling and Use of Chemical Weapons and on their Destruction.* 1992. Extracted from CD/1173, Dated September 3, 1991.

Arms Control and Disarmament Agency, U. S. 1993. *Press Release: France to Host Signing Ceremony for Chemical Weapons Convention.* Washington, D. C. January 5, 1993.

Auld, Major S.J.M. 1918. *Gas and Flame in Modern Warfare.* New York: George H. Doran.

Aveni, Adrian F. 1978. "Organizational Linkages and Resource Mobilization: The Significance of Strength and Breadth." The Sociological Quarterly. (Spring) No. 19. pp. 185 -202.

Bachrach, Peter and Morton Baratz. 1970. *Power and Poverty: Theory and Practice.* New York: Oxford University Press.

Bachrach, Peter and Morton S. Baratz. 1962. "Two Faces of Power." *American Political Science Review* 56: 947-952.

Bachrach, Peter and Morton S. Baratz. 1963. "Decisions and Nondecisions: An Analytical Framework." *American Political Science Review* 57: 641-651.

Bailey, Connor and Charles E. Faupel. 1989. "Out of Sight Out of Mind: Public Opposition to Ocean Incineration." *Coastal Management.* Vol.17, pp.89-102.

Faupel, Charles E. 1992. "Environmentalism and Civil Rights in Sumpter County, Alabama in Bunyan Bryant and Paul Mohai. *Race and the Incidence of Environmental Hazards: A Time for Discourse.* Westview: Boulder, Colorado.

Bailey, Connor et al. 1993. "Fighting Toxics in Dixie: The Historical Transformation of a Radical Environmentalist Group." Paper read at the 27th Annual Meetings of the Oral History Association, Birmingham, Alabama, October 1993.

Bailey, Connor, Charles Faupel and Kelly D. Alley. 1993. "Environmental Justice: Mobilization of a Grassroots Social Movement." Submitted for Publication in *Journal of Agricultural and Food Information.*

Bailey, Conner and Charles F. Faupel. 1993. "Movers and Shakers and PCB Takers: Hazardous Waste and Community Power." *Sociological Spectrum* 13 89-115.

Bailey, Kathleen C. 1991. *Doomsday Weapons in the hands of many: the arms control Challenge of the '90s.* Chicago: University of Illinois Press.

Bailey, Kathleen C. 1992. "Problems with a Chemical Weapons Ban." *Orbis: A Journal of World Affairs* 36 (Spring): 239-251)

Balandier, G. 1966. "The Colonial Situation: A Theoretical Approach." In Immanuel Wallerstein (Ed), *Social Change: The Colonial Situation* (pp. 34-61). New York: John Wiley and Sons

Barsamian, David (1991) *Stenographers to Power: Media & Propaganda--- David Barsamian Interviews* . Monroe, Maine: Common Courage Press, as cited in "*Z Magazine*" by David Peterson, pp. 80-84, *Media and Power.*

Bates, H.C. 1990. "The Growth of Citizen Politics: Stages in Local Community Organizing." *Dissent* 37 517-518.

Bear, Dinah. 1987. "Overview of Dinah Bear's Presentation on the National Environmental Policy Act (NEPA)." National SPOC Conference-March 18-19,1987.

Bear, D. 1989. "NEPA at 19: A Primer on an "Old" Law with Solutions to New Problems." *Environmental Law Reporter--News and Analysis* February .

Bell, Roderick, David Edwards and R. Harrison Wagner (Eds). 1969. *Political Power: A Reader in Theory and Research.* New York: Free Press.

Benford, Robert D., Helen A. Moore and J.Allen Williams Jr. 1993. "In Whose Backyard?: Concern About Siting a Nuclear Waste Facility." *Sociological Inquiry* 63 (No. 1): 31-47.

Bennett, Stephen Earl. 1990. "The Implications of Nonvoting for Democracy in the United States." *American Journal of Political Science* 34 (3): 771-802.

Berger, Peter and Thomas Luckmann. 1969. *The Sacred Canopy.* New York: Doubleday & Co., Inc.

Berger, Peter L. and Thomas Luckmann. 1966. *The Social Construction of Reality: A Treatise in the Sociology of Knowledge.* New York: Doubleday & Company.

Bernauer, Thomas. 1990. *The Projected Chemical Weapons Convention: A Guide to the Negotiations in the Conference on Disarmament.* New York: United Nations Institute for Disarmament Research.

Birch, A. 1964. *Representative and Responsible Government.* London: Allen and Unwin.

Bittman, Ladislav. 1990 (Summer). "The Use of Disinformation by Democracies." *International Journal of Intelligence and Counterintelligence* 4 (2): 243-261.

Blackwell, Oris. 1987. *Report of Kentucky Community Study Group.*

Block, Fred. 1980. "Beyond Relative Autonomy: State Managers as Historical Subjects." *The Socialist Register* 227-240.

Boyd, J. (Ed). 1950. *Jefferson Papers.* Princeton: Princeton University Press.

Bradbury, J. A. et al. 1994. "Community Viewpoints of the Chemical Stockpile Disposal Program." Prepared for Science Applications International Corporation under Contract 05-940641-00, Battelle Pacific Northwest Laboratories, Washington, D. C.

Braybrooke, David and Charles Lindblom. 1963. *A Strategy of Decision: Policy Analysis as a Social Process.* New York: Free Press.

Bregman, Jacob I. and Kenneth M. Mackenthun. 1992. *Environmental Impact Statements.* Boca Raton: Lewis Publishers, Inc.

Brown, Frederic. 1968. *Chemical Warfare: A Study in Restraints.* Princeton: *Princeton University Press.*

Burck, Gordon M. 1990. "Chemical Weapons Production Technology and the Conversion of Civilian Production." *Arms Control: The Journal of Arms Control and Disarmament* 11: 122-163.

Burck, Gordon M. and Charles C. Flowerree. 1991. *International Handbook on Chemical Weapons Proliferation.* Greenwood Press.

Bush, George. 1990. *Executive Order 12735: Chemical and Biological Weapons Proliferation.* Weekly Compilation of Presidential Documents.

Bush, George. 1991(May 13). Statement on chemical Weapons. Weekly Compilation of Presidential Documents:

Butterfield, L. III (ed.). 1962. *Diary of John Adams.* Camridge, Mass.

Cable, Sherry and Michael Benson. 1993. "Environmental Injustice: The Failure of the Regulatory Process and the Emergence of Grassroots Environmental Organizations." *Social Forces.*

Cable, Sherry, Edward J. Walsh and Rex H. Warland. 1988. "Differential Paths to Political Activism: Comparisons of Four Mobilization Processes After the Three Mile Island Accident.'' *Social Forces*. Volume 66:4 (June).

Cairncross, F. 1990. "Put It Somewhere Else Please.'' *Economist* 316: Survey (S: 8): 10-11.

Caldwell, Lynton K. 1977. "The Environmental Impact Statement: A Misused Tool.'' Environmental Impact Analysis: Emerging Issues in Planning. Papers of the Conference on Environmental Impact Analysis. "The Decision Process''., Urbana-Champaign, Illinois.

Caldwell, Lynton K. 1979. "Is NEPA Inherently Self-Defeating?" *Environmental Law Reporter* 9: 50001-7

Caldwell, Lynton K. 1983. "EIS Procedures in the U.S.A.: 12 Years On. A Personal View.'' Aberdeen, Scotland.

Caldwell, Lynton K. 1988. "Environmental Impact Anlysis (EIA): Origins, Evolution, and Future Directions.'' *Impact Assessment Bulletin* 6 (No. 3-4): 75-83.

Caldwell, Lynton K. 1989. "A Consitutional Law for the Environment: 20 Years with NEPA Indicates the Need." *Environment* 31 (10 (December)): 6-28.

Caldwell, Lynton K. 1989. "Understanding Impact Analysis: Technical Process, Administrataive Reform, Policy Principle." In R. V. Bartlett (Ed), *Policy Through Impact Assessment: Institutional Analysis As a Policy Strategy*. Westport, Connecticut: Greenwood Press

Caldwell, Lynton K. 1990. "NEPA at Twenty: A Retrospective Critique.'' *Natural Resources and Environment* 1 (Summer) (6-8): 49-50.

Caldwell, Lynton K.1969. *Major Alternatives for Institutional Reforms Designed to Improve the Government's Capacity to Manage the Environment*. [Listed also under II. REPORTS AND TESTIMONY, from Lynton Caldwell's collection of publications]

Cardechi, Guglielmo. 1987. "Dialectical Class Analysis.'' (Ed), *Class Analysis and Social Research* (pp. London: Blackwell

Carnes, Samuel. 1983. "Incentives and Nuclear Waste Siting: Prospects and Constraints." *Energy Systems and Policy* , 7

Carnes, Samuel A. . 1989. "Disposing of Chemical Weapons: A Desired End in Search of Acceptable Means." *The Environmental Professional* 11 (No. 4): 279-289.

Carnes, S. A. and J. Sorensen. N.d.. "Sweets for the Sour: Incentives in Environmental Mediation."

Carnes, Samuel A. (as quoted by Owen Grise, Staff Writer). 1986. "Incinerator Decision May be Made Before Effects are Determined." *Richmond Register*, May 16, 1986, 1.

Carnes, S. A. et al. 1989.*Emergency Response Concept Plan for Newport Army Ammunition Plant and Vicinity.* October. Oak Ridge, Tennessee, ORNL. Martin-Marietta Energy Systems for the Department of Energy.

Carnes, S.A. et al. 1982. *Incentives and the Siting of Radioactive Waste Facilities.* Martin Marietta Energy Systems for the Department of Energy.

Carnes, Samuel et al. 1989. *Emergency Response Concept Plan for Aberdeen Proving Ground and Vicinity.* (October). U.S. Department of Energy.

Carnes, Samuel et al. 1989. *Emergency Response Concept Plan for Newport Army Ammunition Plant and Vicinity.* (October). U.S. Department of Energy.

Carnes, Samuel A. et al. 1986 (March). *Preliminary Assessment of the Health and Environmental Impacts of Incinerating M55 Rockets Stored at Pine Bluff Arsenal, Lexington-Bluegrass Depot Activity, and/or Anniston Army Depot at Pine Bluff Arsenal.* Oak Ridge, Tennessee. ORNL. Report No. 6197, for the U. S. Department of Energy under contract No. DE-AC05-84OR21400.

Carr, C.H. 1951. *The New Society.* London: Macmillan.

Carter, Luther J. 1970. "Nerve Gas Disposal: How the AEC Refused to Take Army off the Hook." *Science* 169 1296-1298.

Catlin, G.E. G. 1927. *Science and Method of Politics.* Alfred A. Knopf.

Catlin, G.E.G. 1930. *A Study of the Principles of Politics.* Macmillan.

Cecil, Paul Frederick. 1986. *Herbicidal warfare: The RANCH HAND Project in Vietnam.* Praeger Publications.

Centaur Associates. 1979. *Siting Hazardous Waste Management Facilities and Public Opinion.* Washington D. C.: U. S. Environmental Protection Agency, pp. 210-215.

Chemical and Engineering News, "Removal of U. S. Stocks from Germany Sparks Debate," August 13, 1990, pp. 10-11.

Chemical Demilitarization Update. 1990. U. S. Army Chemical Materials Destruction Agency. (USACMDA). Office of the Program Manager for Chemical Demilitarization: SAIL-PMI, Aberdeen Proving Ground, MD.

Chemical Demilitarization Update. 1993. Issue No. 3, Office of the Program Manager for Chemical Demilitarization. SAIL-PM, Aberdeen Proving Ground, MD.

Chemical Stockpile Disposal Program: General Information. Army Public Relations Officer. no date. U.S. Army Toxic and Hazardous Materials Agency, Aberdeen Proving Ground, MD.

Chemical Weapons Movement History Compilation. 1987. Program Manager for Chemical Demilitarization. (Chemical Stockpile Disposal Program) 12 June 1987. Program Executive Officer- Program Manager for Chemical Demilitarization, Aberdeen Proving Ground, Maryland 21010-5401.

Chen, Edwin. 1979. *PBB: An American Tragedy.* Englewood Cliffs, New Jersey: Prentice Hall.

Christrup, J. 1990. "Not in Anyone's Backyard." *Greenpeace.* 15:1, p. 14, January.

Chomsky, Noam. Fall 1991. "20th Century American Propaganda: A Brief History of U.S. Corporate and Government Propaganda Operations." *Propaganda Review* 8 8-44.

Chomsky, Noam. 1988. *Manufacturing Consent: The Political Economy of the Mass Media.* New York: Pantheon Books.

Cobb and Elder. *American Policy: The Dynamics of Agenda Building.*

Cohen, Jean. 1982. "Between Crisis Management and Social Movements: The Place of Institutional Reform." *Telos*. LII, p. 21-40.

Cohn, Carol. 1987. "In the Rational World of Defense Intellectuals." *Signs* 12:4 (Summer).

Conti, Laura. 1977. *Visto da Seveso, l'Evento Straordinario e l'Amministrazione Ordinaria.* Milan: Feltrinelli.

Council on Environmental Quality. *Regulationds on Implementing NEPA.* November 29, 1978. Reprint 43 Federal Register 55978-56007.

CSEPP Update: News of the Chemical Stockpile Emergency Preparedness Program. (FEMA) Federal Emergency Management Agency, Washington, D. C. September/October 1992

CSEPP Update: News of the Chemical Stockpile Emergency Preparedness Program, (FEMA) Federal Emergency Management Agency, Washington, D. C. February/March 1992.

CSEPP Update: News of the Chemical Stockpile Emergency Preparedness Program. (FEMA) Federal Emergency Management Agency, Washington, D. C. October/November 1993

Cochrane, Rexmond C. "Medical Research in Chemical Warfare." Undated (believed to have been written in 1946). U. S. Department of the Army.

Common Sense: A Newsletter of Common Ground. 1992. Funded by the Kentucky Environmental Foundation, Inc. Berea, KY (April).

Congress, U.S. U.S. Department of Defense Authorization Act of 1986. November 8, 1985.

Cook, Frank J. 1962. *The Warfare State.* New York: The Macmillan Company.

Corry, J. Alex. 1979. "Soverign People or Soverign Governments." Soverign People or Soverign Governments, Halifax.

Costner, Pat and Joseph Thornton. 1990. *Playing With Fire: Hazardous Waste Incineration.* Greenpeace U.S.A.

Cousins, Norman. 1987.*The Pathology of Power*. New York: W.W. Norton & Company.

Cox, Andrew, Paul Furlong and Edward Page. 1985. *Power in Capitalist Societies: Theory, Explanations and Cases.* Brighton, Sussex: Wheatsheaf Books, Ltd.

CSEPP Update: News of the Chemical Stockpile Emergency Preparedness Program. (FEMA) Federal Emergency Management Agency, Washington, D. C., September/October 1992.

CSEPP Updaate: News of the Chemical Stockpile Emergency Preparedness Profram, (FEMA), Federal Emergency Management Agency, Washington D. C. October/November 1993

Crenson, Matthew. 1971. *The Unpolitics of Air Pollution.* Baltimore: The Johns Hopkins Press

Dahl, Robert A. 1957. "'The Concept of Power'." *Behavioral Science.* 2: 201-205.

Dahl, Robert. 1969. "'The Concept of Power.'" In R. Bell, D. M. Edwards and R. H. Wagner (Ed), *Political Power: A Reader in Theory and Research*) New York: Free Press

Dahl, R.A. 1958. "A Critique of the Ruling Elite Model." *American Political Science Review* 52, (June): 463-469.

Dahl, R.A. 1961. *Who Governs? Democracy and Power in an American City.* New Haven: Yale University Press.

Dahrendorf, Ralf. 1959. *Class and Class Conflict in Industrial Society.* Stanford: Stanford University Press.

Daugherty, M. , A. P. Watson and T. Vo-Dinh. 1992. "Currently Availalble Permeability and Breakthrough Data Characterizing Organophosphate and Warfare Agent Simulants in Civilian Protective Clothing Materials." *J. Hazardous Materials (In Press)*

Davis, Kenneth S. (Eds). 1971. *Arms, Industry and America.* New York: H.W. Wilson Co.

Demecs, Desiderio D. 1987. *Final Report of the DPEIS and Related Drafts, Pine Bluff Arsenal.* U. S. Army Office of the Program Manager Executive Officer,
Program Manager for Chemical Demilitarization.

Department of the Army, U. S. "Chemical Stockpile Disposal Program: In Defense of the Programmatic Approach." no date.

Department of the Army, U. S., "DRAFT: PHASE I ENVIRONMENTAL REPORT for Pine Bluff Arsenal (PBA)." No Date. Martin Marietta Energy Systems for the Department of Energy (DOE)..

Department of the Army, U. S. 1991. "STATUS DRAFT: Phase I Environmental Report, Disposal of Chemical Agents and Munitions Stored at Pueblo Depot Activity (PUDA), Pueblo, Colorado." April. Program Manager for Chemical Demilitarization, Aberdeen Proving Ground.

Department of the Army, U. S 1991. *Instructor's Guide: Madison County CSEPP Orientation Course.* October. Office of Program Manager for Chemical Demilitarization, Aberdeen Proving Ground, Maryland.

Department of the Army, U. S. 1986. "Chemical Stockpile Disposal Concept Plan." March 15, 1986. Aberdeen Proving Ground, Maryland.

Department of the Army, U. S. 1985. "Independent Evaluation/Assessment of Rocket, 115mm: Chemical Agent (GB or VX), M55." October 1985, Aberdeen Proving Ground, MD.

Department of the Army, U. S. 1985 "Toxicological Research on Chemical Agents Medical Task Area Update." 1985. Health Effects Division.

Department of the Army, U. S. 1986. "Chemical Stockpile Disposal Program Draft Programmatic Environmental Impact Statement (DPEIS) " Aberdeen Proving Ground, Maryland.

Department of the Army, U. S. 1991. *Hearings on National Defense Authorization Act for Fiscal Years 1992 and 1993*---H. R. 2100; Oversight of Previously Authorized Programs before the Committee on Armed Services, House of Representatives, One Hundred Second Congress, First Session: Procurement and Military Nuclear Systems Subcommittee Hearings on PROCUREMENT OF AIRCRAFT, MISSILES, WEAPONS AND TRACKED COMBAT VEHICLES, AMMUNITION, AND OTHER PROCUREMENT. March 21, April

10,11, and 17, 1991. U. S. Government Printing Office, Washington, D.C.

Department of the Army, U. S. 1986. "Army Disposal of Chemical Weapons: Hearing before the INVESTIGATIONS SUBCOMMITTEE of the COMMITTEE ON ARMED SERVICES," House of Representatives, Ninety-Ninth Congress, Second Session. Friday, July 25, 1986. U.S. Government Printing Office: Washington 1986.

Department of the Army, U. S. 1986. *CSDP Concept Plan.* Public Affairs Office, Office of the Program Manager for Chemical Demilitarization, Aberdeen Proving Ground, MD.

Department of the Army, U. S. 1988. "Chemical Stockpile Disposal Program: Final Programmatic Environmental Impact Statement (FPEIS) ", Vol. 1,2, and 3. (January). Aberdeen Proving Ground, Maryland.

Department of the Army, U. S. *Chemical Stockpile Disposal Public Hearings: Information for Public Hearings.* (No date) U.S. Army Program Manager for Chemical Demilitarization, Aberdeen Proving Ground, MD 21010-5401.

Department of the Army, U. S. 1990. *Planning Guidance for the Chemical Stockpile Emergency Preparedness Program: Final Interim Draft..* Federal Emergency Management Agency, Washington, D. C.

Department of Health and Human Services ,U. S.. *Results of a Workshop Meeting to Discuss Protection of Public Health and Safety during Reentry into Areas Potentially Contaminated with a Lethal Chemical Agent (GB, VX, or Mustard Agent).* Availability announced in 55 Federal Register 28940.

Department of the Army, U. S. 1993. *Annual Status Report on the Disposal of Lethal Chemical Weapons and Material.* December 15, 1993. Prepared in response to Title 14, Part B, Section 1412 of the 1986 Defense Authorization Act and Section 171 of the 1991 Defense Authorization Act.

Department of Commerce, U. S. 1993. National Technical Information Service. 5285 Port Royal Road, Springfield, VA 22161.

Department of Defense Appropriations Bill of 1992. *Report on the Committee on Appropriations to Accompany H. R. 2521.* 102nd

Congress, First Session, Report 102-95. June 4, 1991, U. S. Government Printing Office, Washington, D. C.

Department of State, U. S. 1990. "Union of Soviet Socialist Republics-United States: Agreement on Destruction and Non-Production of Chemical Weapons and on Measures to Facilitate the Multilateral Convention on Banning Chemical Weapons." *International-Legal Materials* 29 (June): 932-940.

DTIC (Defense Technical Information Center). 1987. *Le Monde*, " Chemical Armaments Stored in the USSR" 29 December 1987.Alexandria, VA.

DTIC (Defense Technical Information Center).1987. *International Defense Review*,
"The Soviets Reveal Their Chemical Warfare Means." (November).

Dolan, Frederick M. 1991. "Hobbes and/or North: The Rhetoric of American National Security." In A. a. M. Kroker (Ed), *Ideology and Power in the Age of Lenin in Ruins* (pp. 191-209). New York: St. Martin's Press

Domhoff, William. 1967. *Who Rules America?* New York: Random House.

Domhoff, William. 1970. *The Higher Circles.* New York: Random House.

Domhoff, William. 1976. "'I am not an 'Insrumentalist': A Reply to 'Modes of Class Struggle and the Capitalist State' and Other Kapitalistate Critics." *Kapitalistate* 4-5 221-224.

Domhoff, G. William. 1978. *Who Really Rules? New Haven and Community Power Reexamined.* New Brunswick: Transaction Books.

Domhoff, William. 1983. *Who Rules America Now? New* York: Simon and Schuster.

Douglas, Joseph D. 1990. "Beyond Nuclear War." *Journal of Social, Political and Economic Studies* 15 (Summer): 141-156.

Drury, Allen. 1962. *A Shade of Difference.* New York: (?).

Dunleavy, Patrick and O'Leary. 1987. *Theories of the State: The Politics of Liberal Democracy.* London: Macmillan Education Limited.

Dye, Thomas R. 1983. *Who's Running America?* Englewood Cliffs: Prentice Hall.

E.A. Engineering, Science and Technology (APG). October 1987. *Community Review Support Study: Aberdeen Area.* U.S. Army: Office of the Program Executive Officer- Program Manager for Chemical Demilitarization, Aberdeen, Maryland.

Eliade, Mircea. 1958. *Patterns in Comparative Religion: A Study of the Element of the Sacred in the History of Religious Phenomena.* Translated by Rosemary Sheed. Meriden Books, The World Publishing Co. (out-of-print): New York.

Eliade, Mircea. 1963. *Myth and Reality.* Harper & Row Publishers: New York.

Eckstein, Arthur. 1992. "George Orwell's Second Thoughts on Capaitalism." In J. Rose (Ed), *The Revised Orwell* (pp. 191-205). East Lansing: Michigan State University Press

Edelman, Murray. 1964. *The Symbolic Uses of Politics.* Urbana: University of Illinois Press.

Eggington, Joyce. 1980. "The Poisoning of Michigan." New York: W. W. Norton.

Environmental Protection Ageny (EPA). 1985d."Ocean Incineration Regulation." Proposed Rules. February 28, 1985. Federal Register 50 (40): 8222 -8288.

Elliot, Karen and Philip Revzin. 1993. "Arsenal of Poison Gas Languishes as Russia is Unable to Destroy It." *The Wall Street Journal*, February 25, A-1; A-6, Column 2.

Ellis, William E. 1985. *Madison County: 200 Years in Retrospect.* Richmond: Madison County Historical Society.

Ellul, Jacques. 1964. *The Technological Society.* Toronto: Alfred A. Knopf, Inc.

Ellul, Jacques. 1965. *Propaganda: The Formation of Men's Attitudes.* New York: Alfred A. Knopf, Inc.

Elster, J. 1982. "Marxism, Functionalism and Game Theory." *Theory and Society* 11 453-82.

Ember, Lois R. 1990. "Chemical Weapons Disposal: Daunting Challenges Still Ahead." *Chemical and Engineering News* 68 (33): 1-20.

Emerson, Robert M. 1983. *Contemporary Field Reseasrch: A Collection of Readings.* Boston: Little, Brown and Company.

Etzioni-Halevy, Eva. 1989. *Fragile Democracy: The Use and Abuse of Power in Western Societies.* New Brunswick: Transaction Publications.

Fairclough, Norman. 1989. *Language and Power.* London: Longman Group UK Limited.

Federal Emergency Management Agency, U. S. (FEMA) 1991. *Guidelines for Conducting Public Affairs Activities in support of Alert & Notification System Development, Installation and Operation: Final Interim Guidance.* September 7, 1991. FEMA, Offices of Public and Intergovernmental and Congresional Affairs. Washington, D. C. in support of the Chemical Stockpile Emergency Preparedness Program.

Feldman, David L. 1988. *Intergovernmental Consultation and Coordination: Mitigating Public Concerns Relating to Implementation of the U.S.Army's Chemical Stockpile Disposal Program,* ORNL/TM-10730. Oak Ridge, Tennessee. ORNL.

Feldman, David Lewis. 1991 (April). "SARA Title III and Community Hazards Planning: Lessons From the U.S. Army's Chemical Stockpile Emergency Preparedness Program." The Fourth Annual HAZARDOUS MATERIALS CONFERENCE/CENTRAL, Rosemont, Illinois.

Feldman, David Lewis. 1991 (April 28-May 3). "The Chemical Stockpile Intergovernmental Consultation Program: Lessons for High Level Waste Public Involvement." High Level Radioactive Waste Management: Proceedings of the Second Annual Interntional Conference, Las Vegas, Nevada.

Feldman, David Lewis. 1989. *Intergovernmental Consultation and Coordination and Emergency Response: The Relationship Between ICCB and SARA Title III in the U. S. Army's Chemical Stockpile Disposal Program.* ORNL/TM-10923, Oak Ridge, Tennessee. ORNL.

Feldman, David Lewis. 1991. *Water Resources Management: In Search of an Environmental Ethic.* Baltimore: Johns Hopkins University Press.

Field Notes. 1993 (February 1). ORNL Bulletin Board "D" Corridor. Oak Ridge, Tennessee: Martin Marietta Energy Systems for the Department of Defense and the U.S. Army.

Field Notes for August 19, 1993. Connor Bailey. Community Meeting on Alternative Technology sponsored by Anniston depot, Anniston City Auditorium.

Field Notes for 31 January 1994. Connor Bailey. Jacksonville State University on ANAD incineration of cw.

Findlay, Trevor. 1990. "Chemical Disarmament and the Environment." *Arms Control Today* 20 (Spring): 12-16.

Findlay, Trevor (Eds). 1991. *Chemical Weapons & Missile Proliferation: With Implications for the Asia/Pacific region.* Lynne Rienner Publishers.

Fitzgerald, Tom. 1988. "Comments of the Kentucky Resources Council, Inc. on
Final Programmatic Environmental Impact Statement Chemical Demilitarization Program." January 29, 1988.

Flamm, K.J., Q. Kwan and W.B. McNulty. Chemical Stockpile Disposal Program: Chemical Agent and Munition Disposal, Summary of the U.S. Army's Experience. 1987. Aberdeen Proving Ground, MD.

Forgacs, David (Eds). 1988. *An Antonio Gramsci Reader: Selected Writings, 1916-1935.* New York: Shoken Books.

Fox, M. and Scott, D. 1980. "The Genetic Toxicology of Nitrogen and Sulphur Mustard." *Mutation Research*, 75, 131-68.

Francis, Taylor and. 1983, January 13-20. "Herbicides in War: The Long-Term Ecological and Human Consequences." *International Symposium on Herbicides and Defoliants in War: The Long-Term Effects on Man and Nature*, Ho Chi Minh City, Vietnam,

Frederick, C.J. 1937. *Constitutional Government and Politics.* Harper.

Freeman, Karen. 1991. "The Unfought Chemical War." *The Bulletin of the Atomic Scientists* (December):

Freudenburg, William R. and Robert Grambling. 1990. "Community Impacts of Technological Change: Toward a Longitudinal Perspective." Paper presented at the Annual Meetings of the Rural Sociological Society, Norfolk, VA.

Freudenburg, William R. and Susan Pastor. 1992. "NIMBYs and LULUs: Stalking the Syndromes." *Journal of Social Issues* 48 (No. 4): 39-61.

Fredonia Group. 1990. "Hazardous Waste Management." *The Hazardous Waste Consultant* . January/February (Industry Study # 261): 1.1-1.3.

Frey, Frederick. 1971. "Comment: On Issues and Nonissues in the Study of Power." *The American Political Science Review* 65 1081-1104.

Friere, Paulo. 1972. *The Pedagogy of the Oppressed.* Harmondsworth: Penguin Books."

Frumkin, Paul. 1989. "A Looming Crisis." *Restaurant Business* 88 143-154.

Fujitani, Kevin Takashi. 1991. *The United States and Chemical Warfare: The 1925 Geneva Protocol and Its Legacy.* University of Hawaii.

Gamson, William. 1968. *Power and Discontent.* Homewood, Illinois: The Dorsey Press.

Garrett, Robert T. 1984. "Kentuckyans arrive in Utah for tour of nerve-gas incinerator." Courier Journal, August 16, 1984, p.1; p. 3, col. 4.

Gauss, Christian. 1952. "Introduction." In T. b. L. Ricci (Ed), Niccolo Machiavelli: THE PRINCE (New York and Toronto: The New American Library

Gaventa, John. 1980. *Power and Powerlessness: Quiescence and Rebellion in an Appalachian* Valley. Chicago: University of Illinois Press.

Gerlach, Luther P. and Virginia H. Hine. 1970. *People, Power, Change: Movements of Social Transformation.* Indianapolis, IN: Bobbs-Merrill.

Gibbon, Edward. 1963` {1788}. The Decline and Fall of the Roman Empire. Abridged and with an Introduction by Frank C. Bourne. New York: Dell Publishing.

Gilchrist, Colonel Harry L. 1928. A Comparative Study of World War Casualties from Gas and Other Weapons. Washington, D.C.: USGPO.

Gitlin, Todd. 1980. *The Whole World is Watching: Mass Media in the Making and Unmaking of the New Left.* Berkeley: University of California Press.

Goebbels, Joseph. 1935. *Wesen and Gestalt des Nationalsozialismus.* Berlin: Junker and Dunnhaupt.

Gold, David, Clarence Lo and Erik Olin Wright. 1975. "Recent Developments in Marxist Theories of the Capitalist State." Monthly Review (November): 29-51.

Goldblat, Jozef and Thomas Bernauer. 1990. "The U.S. Soviet Chemical Weapons Agreement of June 1990: Its Advantages and Shortcomings." *Bulletin of Peace Proposals: To Motivate Research; to Inspire Future-Oriented thinking; to Promote Activities for Peace* 21 355-362.

Goldfarb, A.S. et al. 1991. Engineering Analysis for Future Use of Chemical Agent Demilitarization Plants: Feasibilty and Desirability. The MITRE Corporation.

Goldman, B.J. Hulme and C. Johnson. 1986. Hazardous Waste Management: Reducing the Risk. Feasibility, CA: Island Press.

Greenberger, Robert S. and John Walcott. 1988. "Chronology of U.S. efforts to oust Gen.Noriega: planned CIA propaganda campaign against him." *Wall Street Journal*, May 6, 211:1.

Greenpeace Pacific Campaign 1989. Map of the Pacific environmental pollution. Designed by D. R. Pollard and Associates. Obtained from Greenpeace Headqurters, Washington, D. C.

Greider, William. 1992. *Who Will Tell the People: The Betrayal of American Democracy.* New York: Simon and Schuster.

Grise, Owen. 1985. "Local Officials React To Report of Nerve Gas Leak at Tooele." *Richmond Register*, May 14, 1985,

Ground, Common. April 1992. "The Politics of Incineration." *COMMON SENSE: A Newsletter of Common Ground* funded by the Kentucky Environmental Foundation. Berea, KY.

Gruber, W. 1990. "The DOE's $100 Billion Cleanup." EI Digest (August)

Gusfield, Joseph. 1963. Symbolic Crusade: Status Politics and the American Temperance Union. Urbana, Illinois: University of Illinois Press.

Gustafson, Phillip F. 1985. "Environmental Assessment Process Needs and Future Directions." In R. G. Post (Ed), Waste Management '85: Waste Isolation in the U.S. Technical Programs and Public Education: Proceedings of the Symposium on Waste Management March 24-28 (pp. Tuscon, Arizona: Department of Energy

Guthman, Edwin O. and C. Richard Allen (Eds). 1993. RFK Collected Speeches. New York: Viking Press.

Habermas, Jurgen. {1973} 1976. Legitimation Crisis. London: Heinemann.

Hackett, P.L. et al. Tetraology Studies of Sulfur Mustard in Rats and Rabbitts: Final Reports. 1985. Fort Detrick, Frederick, MD.

Halbrook, R. S. , L. R. Shugart, A. P. Watson, N. B. Munro and R. D. Linnabary. 1992. "Biological variability in baseline whole blood cholinesterase activity in livestock. Establishing a biomonitoring protocol." *American Journal of Veterinary Research* .

Halpern, M.H. 1975. Bureaucratic Politics and Foreign Policy. Washington, D.C.: Brookings Instutution.

Hamlin, Alan and Philip Pettit (Eds). 1989. The Good Polity: Normative Analysis of the State. New York: Basil Blackwell.

Hampson, Fen-Osler. 1992. The Allies and Arms Control. Baltimore: Johns Hopkins University Press.

Hayes Holgate, Laura Susan. 1990. The Politics of Chemical Weapons Destruction. Massachusetts Institute of Technology.

Hayes-Holgate, Laura. 1990. The Environmental Politics of Chemical Weapons Destruction. Massachusetts Institute of Technology.

Transcript, House of Representatives (U. S.), Subcommittee on Investigations, Committee on Armed Services. Eastern Kentucky University, Richmond, KY. Friday, July 25, 1986, Hearing on Army Disposal Of Chemical Weapons.

Heiman, M. 1990. "From 'Not in My Backyard! to 'Not in Anybody's Back Yard: Grassroots Challenges to Hazardous Waste Facility Siting." *Journal of the American Planning Association* 56 (Summer): 359-362.

Fox, M. and Scott, D. et al. 1957. "Toxicity of Nitrogen and Sulphur Mustard." *Mutation Research*, 75: 131-168.

General Accounting Office (United States) 1990. *Chemical Weapons: Obstacles to the Army's plan to destroy Obsolete Stockpiles: Report to Congressional Requesters.* Washington, D. C.

Heiser, C. et al. Community Review Final Report: Disposal of Ton Containers of VX (U). October 1987. U.S. Army: Ofc of the Program Executive Officer-Program Manager for Chemical Demilitarization.

Hindman, Douglas. 1989. "Public Input to the Chemical Stockpile Disposal Program NEPA Process." *The Environmental Professional* 11 (4): 291.

Ho, I.K. et al. *First Annual Report. Basal Gangalia Dopamine-g-Aminobutyric Acid-Acetylcholine Interaction in Organophosphate Induced Neurotoxicity.* 1985. U.S. Army Medical Research and Development Command, Frederick, MD.

Hobbes, Thomas. 1909. *Leviathan: Reprinted from the Edition of 1651.* London: Oxford at the Clarendon Press.

Hooks, Gregory. 1990. "The Rise of the Pentagon and U.S. State Building: The Defense Program as Industrial Policy." *American Journal of Sociology* 96 (2): 358-401.

Hudson, R. 1990. "Organizing Agendas for the 90s." *Neighbor* 13:1, p. 1 Fall.

Hunsaker, D.B. 1990. *Disposal of Chemical Agents and Munitions Stored at Anniston Army Depot, Anniston, Alabama, Final Phase I Environmental Report.* September. Martin Marietta Energy Systems, Inc., for the DOE.

Hunscher, Don. 1983. "Psychological Effects at NEPA's Threshold." *Columbia Law Review 83*

Hunter, Floyd. 1953. *Community Power Structure.* Chapel Hill: University of North Carolina Press.

Inhaber, Herbert. 1992. "Of NIMBYs, LULUs, and NIMTOOs." *The Public Interest* 107 (Spring): 52-64.

*I*Isaacs, John. 1990. "Banning Chemical Weapons." *Technology Review* 93 32-40.

Javna, John. 1992. "The Problem no one knows how to solve: toxic waste."*Knoxville News Sentinel,* August 10, B1,B2.

Jensen, Kenneth M. and David Wurmser. 1990. *Is It Feasible to Negotiate Chemical and Biological Weapons Control?* Washington, D.C.: U.S. Institute for Peace.

Jessop, Bob. 1978. "Capitalism and Democracy: The Best Possible Political Shell?" In G. Littlejohn, B. Smart, J. Wakeford and N. Yuval-Davis (Ed), *Power and the State* (pp. 10-50). London: Croom Helm Limited

Jones, Charles. *Introduction to the Study of Public Policy.*

Jones, Daniel R. 1969. *The Role of the Chemist in Research on War Gases in the U.S. During WWI.* University of Wisconsin.

Kentucky Natural Resources and Environmental Protection Cabinet. 1986. *Comments on the Final Programmatic Environmental Impact Statement (FPEIS) for the CSDP).* Frakfort, Kentucky.

Klandermans, Bert and Dirk Oegema. 1987."Potentials, Networks, Motivations, and Barriers: Steps Towards Participation in Social Movements." American Sociological Review. Volume 52 (August 519 -531).

Knoke, David. 1982. "Power Structures." In S. Long (Ed), *The Handbook of Political Behavior* . New York: Plenum

Knoll, E. 1990. "Organizer's Organizer." *Progress* 54:1, p. 37. January.

Kourvetaris, George A. and Betty A. Dobratz. 1982. "Political Power and Conventional Political Participation." *Annual Review of Sociology* 8 289-317.

Kramnick, Isaac (Eds). 1987 (1788). *The Federalist Papers: James Madison, Alexander Hamilton and John Jay.* London: Penguin Books, Ltd.

Krause, Joachim. 1991. "The Military Utility of Chemical Weapons in Current Warfare." *International Spectator* 26 (April/June '91): 85-99.

Krieger, Joel and David Held. 1984. "Theories of the State: Competing Claims." In J. Krieger, D. Held and S. Bornstein (Ed), *The State in Capitalist Europe* .

Kroeker, H.V. (Eds). 1979. *Sovereign People or Sovereign Governments.* Halifax: The Institute for Research on Public Policy."

Ladd, Anthony E. 1991. "Opposition to Solid Waste Incineration: Pre-Implementation Anxieties Surrounding a New Environmental Controversey." *Sociological Inquiry* 61 (No. 3): 299-312.

Larson, Jeanne and Madge Cyrus-Michells. 1987. *Seeds of Peace: A Catalogue of Quotations.* (No city name given). New Society Publications.

Lasswell, Harold. 1930. *Psychopathology and Politics.* Chicago: University of Chicago Press.

Lasswell, Harold D. and Abraham Kaplan. 1950. *Power and Society: A Framework for Political Inquiry.* New Haven: Yale University Press.

Latimer, George and Linda K. Carlisle. 1985. "Personnel modernization in Saint Paul: a model for participation and consensus building." *National Civic Review: Making citizen-democracy-work* 74 (Spring): 365-371.

Ledogar, Stephen J. 1991. "Destruction of Weapons Systems under Multilateral Arms Control Agreements." *Disarmament: A Periodic Review by the United Nations* 14 115-131.

Letter: Senator Wendall Ford to House Armed Services Committee, Congress of the United States. July 1986.

Lenin, V.I. 1929. *The State.* Pravda.

Lerner, Max. 1940. "Introduction." (Ed), *The Prince and the Discourses* .New York: Random House, Inc.

Levine, Adeline Gordon. 1982. *Love Canal: Science, Politics and People.* Lexington, Mass.: Heath.

Lewin. 1920. *Gifte in der Weltgeschichte.* Berlin:

Lewis, Paul. 1989. "Soviets Welcoming Bush's Plan on Chemical Arms go Further." *New York Times,* September 27, 1989,

Lewis, W. Lee. 1922. "Is Prohibiting of Gas Warfare Feasible?" *Atlantic Monthly* 129 (June 1922).

Ley, D. and J. Mercer. 1980. "Longitudinal conflict and the politics of consumption." *Economic Geography.* 56: 89-109.

Lippman, Thomas W. 1994. "Chemical Weapons: A Difficult Legacy." The Washington Post, Monday, June 13, 1994, 1; A-10.

Lippman, Walter. {1921} 1932. *Popular Opinion.* London: Allen & Unwin.

Liston, Robert A., *The Right To Know.*

Little, Arthur D. 1982. *Incineration versus Neutralization for Johnston Atoll Chemical Agent Disposal System..* Huntsville, Alabama.

Little, Arthur D. *Preliminary Study of Subsequent Uses for Chemical Agent Demilitarization Facilities.* May 1984. Cambridge, Massachusetts.

Locke, John. 1689. *Second Treatise of Civil Government.*

Lubasz, Heinz. 1964. *The Development of the Modern State.* London: The Macmillan Company.

Lukes, Steven. 1974. *Power: A Radical View.* London: Macmillan.

Lurk, P.W. *Novel Approaches to Demilitarizing Burstered Chemical Munitions.* 28-30 August 1984. U. S. Army Toxic and Hazardous Materials Agency (USATHAMA).

Lyon, L., L. Felice, M. Perryman and E. Parker. 1981. "Community Power and Population: An Empirical Test of the Growth Machine Model." *American Journal of Sociology* (86): 1387-1400.

Machiavelli, Niccolo. {1513}1940. *The Prince and The Discourses: With an Introduction by Max Lerner.* New York: The Modern Library.

MacIver, R.M. 1926. *Modern State.* Clarendon Press.

Mandel, Ernest. 1977. "Introduction."'(Ed), *Karl Marx: CAPITAL,Volume One* (pp. 11-86). New York: Vintage Books (Random House)

Manes, Christopher. 1990. *Green Rage: Radical Environmentalism and the Unmaking of Civilization. Boston:* Little, Brown and Company.

Mangun, George H. January 1947. "Toxicity Laboratory, University of Chicago." *Chemical Corps Journal* Vol. 1 (2): 25-26, 49-50.

Mannheim, Karl. 1936. *Ideology and Utopia.* New York: Harcourt Brace Jovanovich.

Marcuse, Herbert. 1968. *One Dimensional Man: Studies in the Ideology of Advanced Capitalist Society.* Boston: Beacon Press.

Marx, Karl and Friedrich Engels. {1845-6}1970. *The German Ideology.* London: Lawrence & Wishart, Inc.

Marx, Karl and Friedrich Engels. {1852}1962. *Karl Marx and Friedrich Engles: Selected Works, 'The Eighteenth Brumaire of Louis Boneparte'.* Moscow: Foreign Language Publishing House.

Marx, Karl and Frederich Engels. 1971{originally published in 1848}. *The Communist Manifesto.* New York: International Publishers.

Mazur, Allan. 1981. *The Dynamics of Technical Controversy.* Washington, D.C.: Communications Press, Inc.

McCoy and Associates. l990. "Outlook for Commercial Hazardous Waste Management Facilities: A Nationwide Perspective.". *The Hazardous Waste Consultant* 8 (2) (March/April): 4.1-4.6.

McAdam, Doug. 1982. *Political Process and the Development of Black Insurgency l930-1970.* Chicago: University of Chicago Press.

McCarthy, Richard D. 1969. *The Ultimate Folly.* New York: Alfred A. Knopf, Inc.

McCarthy, John D. and Mayer N. Zald. 1976. "Resource Mobilization and Social Movements: A Partial Theory. *American Journal of Sociology.* Volume 82, Number 6, pp. 1212-1238.

McGeorge, Harvey. 1990. "Bugs, Gas and Missiles" *Defense and Foreign Affairs Strategic Policy* 17 (May/June): 14-19.

McGeorge, Harvey. 1991. "The Growing Trend Toward Chemical and Biological Weapons Capability." *Defense and Foreign Affairs Strategic Policy 19 (April): 4-7.*

McGeorge, Harvey J. 1991. "Defining Chemical and Biological Capability." *Defense and Foreign Affairs Strategic Policy* 19 14-15.

McLuhan, Marshall and Quentin Fiore. 1968. *War and Peace in the Global Village.* New York: Touchstone: Simon and Schuster.

Mead, Andy. 1984. "Visitors Find Depot Welcome in Utah." *Lexington Herald Leader,* August 19,

Meetings, Public. Army Disposal of Chemical Weapons Hearing before the Investigations Subcommittee on Armed Services, House of Representatives, Ninety-Ninth Congress, Second Session, July 25, 1986. 1986-July 25.

Memmi, Albert. 1967. *The Colonized and the Colonizer.* Boston: Beacon Press.

Memorandum. January 4, 1992. *Memorandum on National Academy of Sciences Study.*

Menke, John, Hans Carlson M. and et al. *Evaluation of the GB Rocket Campaign: Johnston Atoll Chemical Agent Disposal System Operational Verification Testing.* June 1991,the MITRE Corporation.

Merchant, Carolyn. 1981. "Earthcare: Women and the Environmental Movement,''
Environment 23 (June).

Merelman, Richard M. 1968. "'On the Neo-Elitist Critique of Community Power'." *American Political Science Review 62 451-460.*

Memo announcement of Task Force Meeting in Richmond, Kentucky, August 28, 1984. Cited with permission of Berea College Archives.

Merton, Robert K. 1968. *Social Theory and Social Structure.* 3rd. New York: The Free Press.

Miliband, Ralph. 1969. *The State in Capitalist Society.* London: Weidenfeld and Nicolson.

Mills, C.Wright. 1956. *The Power Elite.* Oxford: Oxford University Press.

Mills, C. Wright. 1959. *The Sociological Imagination.* Oxford University Press,

Minutes of Madison County Task Force on Chemical Weapons, August 22, 1984. Cited with permission of Berea College Archives.

Mitchell, Robert C. and Richard C. Carson. 1986. "Property Rights, Protest and the Siting of Hazardous Waste Facilities.'' *The American Economic Review.* 76: 285-290.

MITRE, Corporation. 1987. *Risk Analysis in Support of the Chemical Stockpile Disposal Program* (CSDP).

MITRE Corporation. 1991. *Engineering Analysis for Future Use of Chemical Agent Demilitarization Plants: Feasibility and Desirability.* April. Cambridge.

Mollenkopf, John. 1975. "Theories of the State and Power Theory Research.'' *Insurgent Sociologist* 4 (Spring).

Morn, Peter. 1972. "Power in New Haven : A Reassessment of Who Governs.''`` *British Journal of Political Science* 2 :457-465.

Morris, Aldon. 1981. "Black Southern Student Sit-In Movement: An Analysis of Internal Organization.'' *American Sociological Review.* Vol.46 (December: 744-767).

Morrison, David C. 1991. "No Easy Out: Environmental and Grass-Roots Opposition Threatens to Upset Arms Control Timetables for Eliminating Chemical Weapons in both the United States and the Soviet Union." *National Journal: The Weekly On Politics and Government* 23 (May 11): 1100-1104.

Morrison, David C. 1992. "Chemical Arms Aren't Easy to Destroy." *National Journal* (June): 2068-2069.

Mostov, Julie. 1992. *Power, Process, and Popular Sovereignty.* Philadelphia: Temple University Press.

Munro, Nancy, L. Shugart, A. Watson and R. Halbrook. 1991. "Cholinesterase Activity in Domestic Animals as a Potential Biomonitor for Nerve Agent and Other Organophosphate Exposure.'' pp.103-115.

Munro, N., A. Watson, K. Ambrose and G. Griffin. 1990. "Treating Exposure to Chemical Warfare Agents: Implications for Health Care Providers

and Community Emergency Planning." *Environmental Health Perspectives* , 89 205-215.

National Environmental Policy Act of 1969 (NEPA) Public Law 1.99-190.

National Research Council. 1992. Board on Army Science and Technology, Commission on Engineering and Technical Systems. *STAR 21: Strategic Technoligies for the Army of the Twenty-First Century*. Washington, D.C.: National Academy Press.

National Research Council. 1984. *Disposal of Chemical Munitions and Agents*.. Committee on Demilitarizing Chemical Munitions and Agents, Board of Army Science and Technology, Commission on Engineering and Technical Systems, National Academy, Washington, D. C.

Newport Study Group and Parke Concerned Citizens of Vermillion, Vigo, Fountain, and Tippecanoe Counties. 1987.*Community Review Final Report: Disposal of Ton Containers of VX.* (Newport Army Ammunition Plant, Newport, Indiana: NAAP).

Nichols, David. 1974. *Three Varieties of Pluralism.* London: Macmillan Limited.

Nielsen, Richard P. 1981. "Toward a method for building consensus during strategic planning." *Sloan Management Review* 22 (Summer): 29-40.

Orum, Anthony. 1967. *Introduction to Political Sociology.* Englewood Cliffs: Prentice Hall.

Orwell, George. 1949. *Nineteen Eighty-Four.* New York: Harcourt, Brace & World, Inc.

Orwell, George . 1992. "Second Thoughts on Capitalism." In J. Rose (Ed), *The Revised Orwell* (pp. 193). East Lansing: Michigan State University

Office of Technology Assessment. 1989. *Coming Clean: Superfund Problems Can Be Solved.* Washington, D.C.

Office of Technology Assessment. 1992. *Background Paper: Disposal of Chemical Weapons: Alternative Technologies.* (OTA), .

O'Hare, M. 1977. "Not on my block you don't: Facility siting and the Strategic Importance of Compensation." *Public Policy.* Fall: 407-458.

Opening Statement: Chairman Mike Synar (D-OKLA.), June 16, 1992. Before the Congress of the United States, House of Representatives, Environment, Energy, and Natural Resources Subcommiteee of the Committee on Government Operations, Rayburn House Office Building, Washington, D. C.

Page, Ann L. and Donald A. Clelland. 1978. "The Kanawha County Textbook Controversy." Social Forces (57): 265-281.

Parenti, Michael. 1970. "Power and Pluralism: A View from the Bottom." *The Journal of Politics* 32 :501-530.

---------- 1980. *Democracy for the Few.* New York: St. Martin's Press.

Parsons, Talcott (Eds). 1966. *On the Concept of Power.* Englewood Cliffs, New Jersey: Prentice-Hall.

Pateman, Carole. 1970. *Participation and Democratic Theory.* Cambridge: Cambridge University Press.

Peck, Elizabeth S. and Emily Ann Smith. 1982. *Berea's First 125 Years.* Lexington: The University Press of Kentucky.

Peden, W. (Eds). 1955. *Notes on the State of Virginia.* Chapel Hill: University Press.

Perrow, Charles. 1984. *Normal Accidents: Living with High-Risk Technologies.* New York: Basic Books, Inc.

Peterson, David. (1992). "Media and Power," *Z Magazine,* April 1992, pp. 80-84

Picardi, Al. 1991. *Alternative Technologies for the Detoxification of Chemical Weapons: An Information Document.* May 24. Greenpeace International, Washington D.C.

Pilisuk, Marc and Thomas Hayden. 1965. "Is There a Military Industrial Complex Which Prevents Peace?" *Journal of Social Issues* (July 21): 67-117.

Pine Bluff Commercial, 1992. "Chemical Incineration Foes Outnumbered by Backers." Tuesday, August 20, 1992, by Malea Walters.

Polsby, Nelson W. 1963. *Community Power and Political Theory.* New Haven and London: Yale University Press.

Poulantzas, Nicos. 1973. *Political Power and Social Classes.* London: New Left Books.

Poulantzas, Nicos. 1974. *Fascism and Dictatorship.* London: New Left Books:

Poulantzas, Nicos. 1975. *Classes in Contemporary Capitalism.* London: New Left Books.

Poulantzas, Nicos. 1978. *State, Power, Socialism.* London: New Left Books.

Powell, Bill. 1970. "Nerve Gas Fears Allayed by Watts." *Lexington-Herald Leader,* August 5, 1970,

Powell, J. Stephen.1984. Political Difficulties Facing Waste-To-Energy Conversion Plant Siting. Cerrell Associates, Inc.

Portion of transcript of proceedings of the Tooele Army Depot CAMDS Overview and Discussion Workshop. August 15, 1984. Cited with permission of the Berea College Archives.

Procedures of the CSDP Programmatic and Local Intergovernmental Consultation and Coordination Boards, U. S. Department of the Army. (undated). Source: Deputy Commissioner for Special Projects, Kentucky Department for Environmental Protection, Natural Resources and Environmental Protection Cabinet, January 14, 1991, Frankfort, Kentucky.

Public Law 99-145. *Department of Defense Authorization Act , 1986.* (99th Congress, November 8, 1985)

Rasmussen and et al. 1975.*Reactor Safety Study: An Assessment of Accident Risks in U.S. Commercial Nuclear Power Plants.* National Technical Information Service, Washington, D. C.

Register, Federal. Intent to Prepare a Site-Specific Environmental Impact Statement: Chemical Stockpile Disposal Program. April 9, 1991. U. S. Congress.

Reich, Jacqueline Carol. 1991. *Structure and Behavior as Determinants: United States Nuclear Test Ban and Chemical and Biological Arms Control Policy.* University of California, Berkeley.

Reich, Michael R. 1991. *Toxic Politics: Responding to Chemical Disasters.* Ithica: Cornell University Press.

Report, 1989. "Chemical Stockpile Disposal Program Site Specific NEPA Reviews Phase I Criteria." Document received by Valerie Hudson, Kentucky Natural Resources and Environmental Protection Cabinet: Department for Environmental Protection, prepared by the U. S. Department of the Army.

Robinson, J.P. 1980. "The Negotiations on Chemical-Warfare Arms Control." *Arms-Control* 1 (1, May): 30-52.

Rogers, George O. 1992. "Aspects of Risk Communication in Two Cultures." *International Journal of Mass Emergencies and Disasters 10 (3)*: 437-464.

Rogers, George O., Annetta P. Watson, John Sorenson, R.D. Sharp and Sam A. Carnes. 1990. *Evaluating Protective Actions for Chemical Agent Emergencies.* Oak Ridge National Laboratory, Oak Ridge, TN., Report No. ORNL-6615.

Rogers, Paul and Malcolm Dando. 1990. *Directory of Nuclear, Biological and Chemical Arms and Disarmament.* London: Tri-Star Service Press Limited.

Rose, Arnold. 1967. *The Power Structure. Lon*don: Oxford University Press.

Russell, Bertrand. 1938. *Power: A New Social Analysis.* London: George Allen and Unwin.

Sartori, Mario. 1939. *The War Gases: Chemistry and Analysis.* New York: Van Nostrand Co., Inc.

Schattschneider, E.E. 1960. *The Semi-Sovereign People: A Realist's View of Democracy in America.* New York: Holt, Rinehart and Winston.

Schroeder, Pat, Representative from Colorado and Citizen's Hearings for Radiation Victims Sponsor. 1987. "Seeds of Peace: A Catalogue of Quotations." In L. A. Cyrus-Michells (Ed). New Society Publications

Schwarzmantel, J.J. 1987. *Structures of Power: An Introduction to Politics.* New York: St. Martin's Press.

Sclove, Richard E. 1994. *Memo: An Update on Consensus Conferences in Europe* , Contained in FAX of January 5, 1995 to offices of the Kentucky Environmental Foundation, Inc.

Scott, James B. 1915. *The Hague Conventions and Declarations of 1899 and 1907.*

Seigel, Lenny, Gary Cohen and Ben Goldman. 1991. *The U.S. Military's Toxic Legacy: America's Worst Environmental Enemy.* Boston: The National Toxics Campaign Fund.

Seigel, Lenny. 1990. (Second Draft) *Chemical Weapons Incineration: The Threat at Home* , for the Military Toxics Network of the National Toxics Campaign.

Sherman, Howard J. and James L. Wood. 1989. *Sociology: Traditional and Radical Perspectives.* New York: Harper & Row.

Shiver, W. 1960. *The Rise and Fall of the Third Reich.* New York: Simon and Schuster.

Shrivastava, Paul. 1987. *Bhopal: Anatomy of a Crisis.* Cambridge: Ballinger.

Shulman, Seth. l990. "US to End Modernization." *Nature* 345 (17): 192.

Shumpert, Barry and A. P. Watson. *Planning Standards for Decontamination for the Chemical Stockpile Emergency Preparedness Program.* August 2, l991. Oak Ridge, Tennessee, ORNL.

Sigal, Lorene L. and Glenn W. Suter II. 1989. "Potential Effects of Chemical Agents on Terrestrial Resources." *The Environmental Professional* 11 (4): 376.

Skinner, Quentin, Richard Tuck, William Thomas and Peter Singer. 1992. *Great Political Thinkers.* New York: Oxford University Press.

Skocpol, Theda. 1980. "Political Response to Capitalist Crises: Neo-Marxist Theories of the State and the New Deal." *Politics and Society* 10 (12): 155-201.

Skocpol, Theda. 1985. *Bringing the State Back In.* UK: Cambridge University Press.

Skocpol, Theda. 1985. *Bringing the State Back In.* UK: Cambridge University Press.

Smith, C. and R. Hanham. 1981. "Any place but here! Mental Health Facilities as Noxious Neighbors." *Professional Geographer.* 33: 32-334.

Solheim, Cathy, Charles Faupel and Connor Bailey. 1994. "Speaking Out Against Garbage: The Vocabularies of Local Citizens in Opposition to the Siting of Solid Waste Landfills.

Sorensen, John, Jon Soderstrom and Sam Carnes. 1984. "Sweets for the Sour: Incentives in Environmental Mediation." *Environmental Management.* Volume 8, No. 4. pp. 287-294.

Sorensen, John and George Rogers. 1989. "Chemical Fears: The Social Effects of the Chemical Stockpile Disposal Program." *The Environmental Professional*
11 385-395.

Spiers, Edward M. 1989. *Chemical Weapons: A Continuing Challenge.* London: Macmillan.

Spivak, Gayatri Chakravorty . (N.d.) "Can the Subaltern Speak?" in L. Grossman.

Staggenborg, Suzanne. 1989. "Organizational and Environmental Influences on the Development of the Pro-Choice Movement." *Social Forces* 68 (1): 204-240.

Statement before Subcommittee on Environment, Energy and Natural Resources, Committee on Government. Brigadier General Walter L. Busbee, Director U. S. Army Chemical Material Destruction Agency Operations. June 16, 1992.

Stern, Jessica Eve. 1992. *The Control of Chemical Weapons: A Strategic Analysis (Arms Control).* Harvard University.

Stringer, Hugh. 1986. *Deterring chemical Warfare: U.S. Policy Options for the 1990s.* Washington: Pergamon Brassey's International Defense Publishers.

Sur Serge. 1990. "Disarmament Argreements and Negotiations: The Economic Dimension." Chemical Weapons Convention (Disarmanent),

Sur-Serge (Ed). 1991. *Verification of Current Disarmament and Arms Limitation Agreements: Ways and Means and Practices.* Gower.

Sutton, Francis X. 1956. *The American Business Creed.* Cambridge: Harvard University Press.

Tabb, W. and L. Sawers (Eds). 1978. *Marxism and Metropolis.* New York: Oxford University Press.

Tawney, R.H. 1931. *Equality.* Harcourt, Brace.

Taylor, Verta. 1989. "Social Movement Continuity: The Women's Movement in Abeyance." *American Sociological Review.* Volume 54 (October: 761 -775).

Technologies, GA. 1987. *Risk Analysis of the On-Site Disposal of Chemical Munitions.*

Technologies, GA. 1987b. *Risk Analysis of the Disposal of Chemical Munitions at National or Regional Sites.*

Technologies, GA. 1987c. *Risk Analysis of the Continued Storage of Chemical Munitions.*

Terrill, W. 1991. "The Chemical Warfare Legacy of the Yemen War." *Comparative Strategy: An International Journal* 10 109-119.

Thomas, Ann Van Wynen and A. J. Thomas Jr. 1970. *Legal Limits on the Use of Chemical and Biological Weapons .* Dallas: Southern Methodist University Press.

Thompson, K. 1989. "Winning the Big One/ Citizen Participation." *Social Policy.* 20:1, p. 34, Summer.

Timmerman, Kenneth R. 1991. *The Death Lobby: How the West Armed Iraq.* New York: Houghton Mifflin.

Tonnies, Ferdinand. {1887} 1963. *Gemeinschaft and Geselleschaft.* New York: American Book.

Transcript: 1986. *Public Meeting on the Chemical Stockpile Dispoal Program* Lexington-Bluegrass Army Depot. May 15, 1986, Commonwealth Reporters, Inc.

Transcript: 1986. *Public Hearing on the Chemical Stockpile Disposal Program,* Richmond, Kentucky, Thursday, August 28, 1986, Brock Auditorium,Eastern Kentucky University. Sandy C. Wilder, Certified Shorthand Reporter, Danville, KY. 40422.

Transcript of Hearing on Army Disposal of Chemical Weapons. Friday, July 25, 1985. Eastern Kentucky University, Conference Room, Richmond, KY.

Transcript of Public Meeting held January 31, 1986. U. S. Department of the Army. Commonwealth Reporters, Inc. (606) 259-2760, Richmond, KY.

Transcript of Public Scoping Meeting: April 25, 26, 1991. Richmond, Kentucky. Associated Reporting Services, Inc., Free-Lance Court Reporter, P.O.Box 85, Lexington, KY. 40501.

Transcript of Public Meeting held in Richmond, Kentucky. May 15, 1986, Commonwealth Reporters, Inc., Lexington, Kentucky.

Turner, Jonathan H. 1986. *The Structure of Sociological Theory.* Fourth Edition. Chicago: The Dorsey Press.

Umatilla and County Soil and Water Conservation District. 1987. *Evaluation of the Draft Programmatic Environmental Impact Statement for the Destruction of Chemical Munitions Stored at the Umatilla Army Depot and Other Army Facilities.* September. U. S. Army: Office of the Program Executive Officer-Program Manager for Chemical Demilitarization, Aberdeen, MD.

Urry, T. and John (eds.) Wakeford. 1973. *Power in Britain: Sociological Readings. London:* Heinemann Educational Books.

U. S. Environmental Protection Agency (EPA) 1979. *Draft Environmental Impact Statement for Subtitle C.* Washington, D.C. : Government Printing Office, January 1979.

U. S. Environmental Protection Agency (EPA). Science Advisory Board. April 1985.

U. S. Environmental Protection Agency, (EPA) 1976. *In Productive Harmony: A Brief Explanation of Environmental Impact Statements.* Washington, D.C. 20460.

U. S. Environmental Protection Agency (EPA) 1988. *The Solid Waste Dilemma: An Agenda for Action.* U.S. Government Printing Office.

Van Dyke, Jon M. 1991. "Protected marine areas and low-lying atolls." *Ocean and Shoreline Management* 16 (2): 87-160.

Van Voorst, Bruce. 1992. "A Thousand Points of Blight" *Time Magazine.*

Vidich, A. and Joseph Bensman. 1958. *Small Town in Mass Society.* Princeton:

Vo-Dinh, T. and T. Pal. 1991.*Development of a Spectrochemical Modification (SM) Technique To Detect Permeation of Chemical Warfare Agent Simulants Through Protective Clothing Materials..* Martin-Marietta Energy Systems for the Department of Energy.

Wachtel, Curt. 1941. *Chemical Warfare.* Brooklyn: Chemical Publishing Co., Inc.

Walsh, Edward J. and Rex H. Warland. 1983. American Sociological Review, Volume 48 (December: 764 -780).

Wasson, John M. and Stephanie Pollack. 1987. "The Waste Land: Confronting America's Garbage Glut." *Science for the People* 19 4-32.

Waters, Lee. 1990. "Chemical Weapons in the Iran/Iraq War." *Military Review* 70 56-63.

Watson, Annetta P. 1989. "Health Effects of Warfare Agent Exposure: Implications for Stockpile Disposal." *The Environmental Professional,* Volume 11, pp. 335-353.

Watson, Annetta P.. Jones and J. Adams. 1992. "Relative Potency Estimates of Acceptable Residues and Reentry Intervals After Nerve Agent Release." *Ecotoxicology and Environmental Safety* (In press).

Watson, A. et al. 1992. "Estimated General Population Control Limits for Unitary Agents in Drinking Water, Milk, Soil and Unprocessed Food Items." Martin-Marietta Energy Systems for the Department of Energy.

Watson, Annetta P. et al. 1992. "General Guidelines for Medically Screening Mixed Population Groups Potentially Exposed to Nerve or Vesicant Agents." Martin-Marietta Energy Systems for the Department of Energy.

Watson, Annetta P. and N. B. Munro. 1990. "Reentry Planning: The Technical Basis for Offsite Recovery Following Warfare Agent

Contamination." April 1990. Martin-Marietta Energy Systems for the Department of Energy.

Weber, Max. 1970. "'Politics as a Vocation.'" In H. H. a. C. W. M. Gerth (Ed), *From Max Weber: Essays in Sociology* (p. 77). London: Routledge & Kegan Paul

Weiss, Frederick G. (Eds). 1974. *Hegel: The Essential Writings*. New York: Harper & Row.

Weiss, Jack S. 1991. "The Approval of Arms Control Agreements as Congressional-Executive Agreements."

Wenger, Morton G. 1980. "The Transmutation of Weber's *STAND* in American Sociology and Its Social Roots." (Ed), *Current Perspectives in Social Theory* (pp. 357-378). JAI Press, Inc.

Westing, Arthur H.D. 1984. *Herbicides in War: The Long-Term Ecological and Human Consequences*. Stockholm International Peace Research Institute.

Whitacre, C. G. et al. 1986. *Personal Computer Program for Chemical Hazard Prediction (D2PC)*. Chemical Research, Development and Engineering Center, Aberdeen Proving Ground, Aberdeen, MD.

White, D.M. 1972. "The Problem of Power." *British Journal of Political Sociology* 2 479-490.

Whiteside, Thomas. 1979. *The Pendulum and the Toxic Cloud: The Course of Dioxin Contamination*. New Haven: Yale University Press.

Whitt, J. Allen. 1982. *Urban Elites and Mass Transportation: The Dialectics of Power*. Princeton: Princeton University Press.

Whittmore, Gilbert F., Jr. 1975. "World War I, Poison Gas Research, and the Ideals of American Chemists." *Social Studies of Science* 5 135-163.

Wilson, L. 1989. "Moving Toward a Movement." *Social Policy*. 20:1, p. 53. Summer.

Wilson, Joy and Assistant Administrator EPA Office of External Affairs. 1987. "NEPA: Present Benefits and Future Goals." Environmental Impact Assessment: Proceedings of Conference on the Preparation and Review of EISs., West Point, New York.

Wolfinger, Raymond E. 1971. "Nondecisions and the Study of Local Politics." *American Political Science Review* , Vol. *65* .

Wolpert, J. A. Mumphrey, and J. Seley. 1972. *Metropolitan Neighborhoods: Participation and Conflict over Change.* Association of American Geograp[hers. Washington, D.C.

Wood, G. (Eds). 1972. *The Creation of the American Republic* 1776-1787. New York:

Wrong, Dennis. 1979. *Power: Its Forms, Bases, and Uses.* New York: Harper & Row.

Yurow, H.W. and R. Herd. 1986. *Decomposition of Agents in Surface Waters.* U.S.Army Armament Munitions and Chemical Command.

Van Kampen et al. 1969. "Organophosphate Poisoning of Sheep in Skull Valley, Utah." *Journal of the American Veterinary Association..* March 15, 154 (6): 623.

Zanders, Jean Pascal. 1990. "Chemical Weapons: Beyond Emotional Concerns." *Bulletin of Peace Proposals: to motivate research; to inspire future-oriented thinking; to promote activities for peace.* 21 87-98.

Zilinskas, Raymond A. August l990. "Biological Warfare and the Third World." *Politics and the Life Sciences* 9 (1): 59-76.

Zinn, Howard. 1980. "War is the Health of the State." (Ed), *A People's History of the U.S.* New York: Harper & Row

Zurcher, L. A., R. G. Kirkpatrick, R. G. Cushing and C. K. Bowman. 1971. "The Anti-pornography campaign: A symbolic crusade." *Social Problems.* 19 217-238.

Appendices

Appendix A

Unitary Stockpile Distribution Around the Country

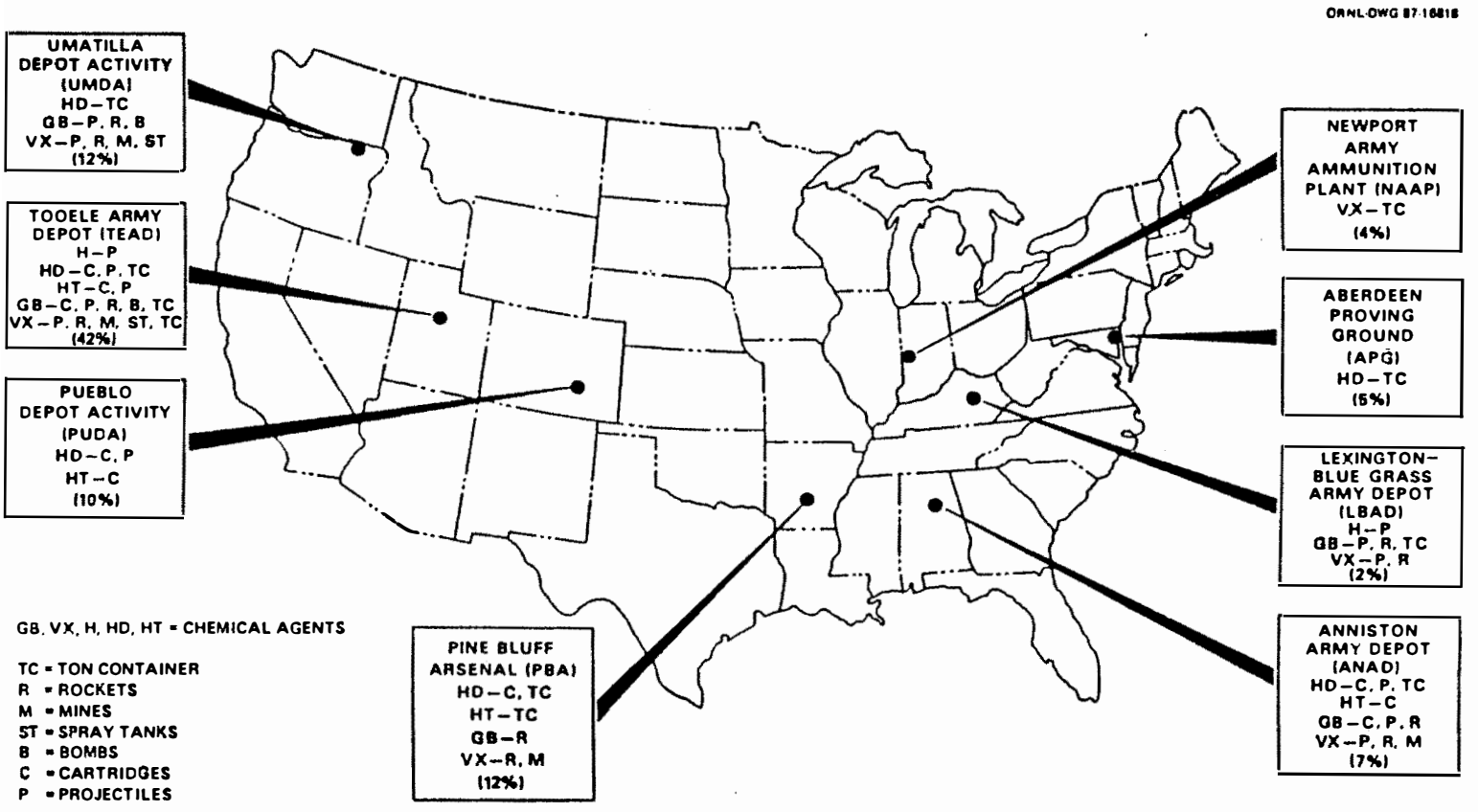

Fig. 1.1. Unitary stockpile distribution throughout the country. Note that small quantities of GA and Lewisite are also stored at TEAD.

Source: U.S. Department of the Army, Final Programmatic Environmental Impact Statement, (FPEIS), 1988, Printed with permission of the U. S. Army Public Affairs Office, Aberdeen Proving Ground, MD.

Appendix B

Percent of Stockpile of Unitary Weapons at Each Storage Site

Appendix B

Table 1

Percent Distribution of Unitary Weapons Stored in the Continental United States

Site locaton	Percetage of total
Tooele Army Depot, UT	42.3
Pine Bluff Arsenal, AR.	12.0
Umatilla Depot, OR.	11.6
Pueblo, CO.	9.9
Anniston Army Depot, AL.	7.1
Johnston Island, South Pacific	6.6
Aberdeen Proving Ground, MD.	5.0
Newport Army Amunition Plant, IN.	3.9
Lexington-Blue Grass Army Depot, KY.	1.6

(Source: U.S. Department of the Army, "Chemical Stockpile Disposal Program Final Programmatic Environmental Impact Statement," Vols. 1,2,3, Office of the Program Manager for Chemical Demilitarization, Aberdeen Proving Ground, MD, 1988).

Appendix C

CSDP Implementation Schedule

CHEMICAL STOCKPILE DISPOSAL PROGRAM

IMPLEMENTATION SCHEDULE

June 1994

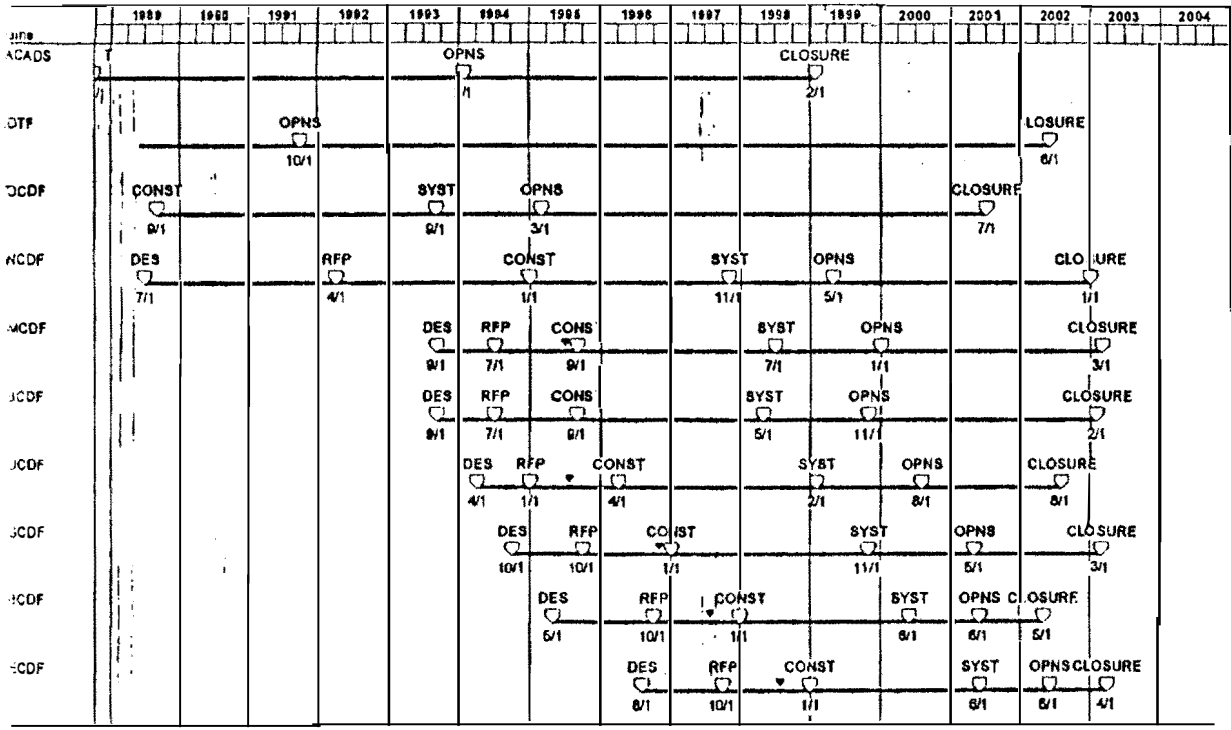

Spurce: B.S. Army Public Affairs Office, Office of the Program Manager for Chemical Demilitarization, Aberdeen Proving Ground, Maryland.

rrent Program Schedule te: 6/8/94	Summary	RFP	Operations Starts		
	Permits	Const Starts	Closure Starts		
	Design Starts	Syst Starts	Pre-Ops		

APR-14 94 10 39 FROM RSMD/USACMDA ID 4106126571 PAGE 1/1
FAX TRANSMITTAL

Appendix D

U. S. Superfund Sites

Hazardous Waste Sites

. Hazardous Waste Sites on the National Priority List, by State: 1991

[Includes both proposed and final sites listed on the National Priorities List for the Superfund program as authorized by the Comprehensive Environmental Response Compensation, and Liability Act of 1980 and the Superfund Amendments and Reauthorization Act of 1986]

STATE	Total sites	Rank	Percent distribution	Federal	Non-Federal	STATE	Total sites	Rank	Percent distribution	Federal	Non-Federal
Total	1,211	(X)	(X)	119	1,091	Missouri	22	16	1.8	3	19
						Montana	8	39	0.7	-	8
United States	**1,201**	**(X)**	**100.0**	**118**	**1,082**	Nebraska	8	39	0.7	1	7
						Nevada	1	50	0.1	-	1
Alabama	12	27	1.0	2	10	New Hampshire	17	22	1.4	1	16
Alaska	6	43	0.5	4	2	New Jersey	109	1	9.1	6	103
Arizona	10	32	0.8	3	7	New Mexico	10	32	0.8	2	8
Arkansas	10	32	0.8	-	10	New York	84	4	7.0	4	80
California	91	3	7.6	20	71	North Carolina	22	16	1.8	1	21
Colorado	16	23	1.3	3	13	North Dakota	2	47	0.2	-	2
Connecticut	15	24	1.2	1	14	Ohio	33	11	2.7	3	30
Delaware	20	18	1.7	1	19	Oklahoma	10	32	0.8	1	9
District of Columbia	-	(X)	0.0	-	-	Oregon	8	39	0.7	1	7
Florida	52	6	4.3	4	48	Pennsylvania	97	2	8.1	4	93
Georgia	13	26	1.1	2	11	Rhode Island	12	27	1.0	2	10
Hawaii	2	47	0.2	2	-	South Carolina	23	15	1.9	1	22
Idaho	9	37	0.7	2	7	South Dakota	4	45	0.3	1	3
Illinois	37	10	3.1	4	33	Tennessee	14	25	1.2	2	12
Indiana	33	11	2.7	-	33	Texas	29	13	2.4	4	25
Iowa	20	18	1.7	1	19	Utah	12	27	1.0	4	8
Kansas	11	30	0.9	1	10	Vermont	8	39	0.7	-	8
Kentucky	19	21	1.6	-	19	Virginia	20	18	1.7	1	19
Louisiana	11	30	0.9	1	10	Washington	49	7	4.1	15	34
Maine	9	37	0.7	2	7	West Virginia	5	44	0.4	-	5
Maryland	10	32	0.8	2	8	Wisconsin	39	9	3.2	-	39
Massachusetts	25	14	2.1	3	22	Wyoming	3	46	0.2	1	2
Michigan	77	5	6.4	-	77						
Minnesota	42	8	3.5	2	40	Guam	1	(X)	(X)	-	1
Mississippi	2	47	0.2	-	2	Puerto Rico	9	(X)	(X)	1	8

- Represents zero X Not applicable.

U.S. Environmental Protection Agency, press release, July 1991. Also in the *Federal Register*.

U. S. Bureau of the Census: Statistical Abstracts of the U. S.,1992, U. S. Department of Commerce. Washington, D.C.,U.S. Government Printing Office.

Appendix E

Nerve Gas Rocket

M55 ROCKET

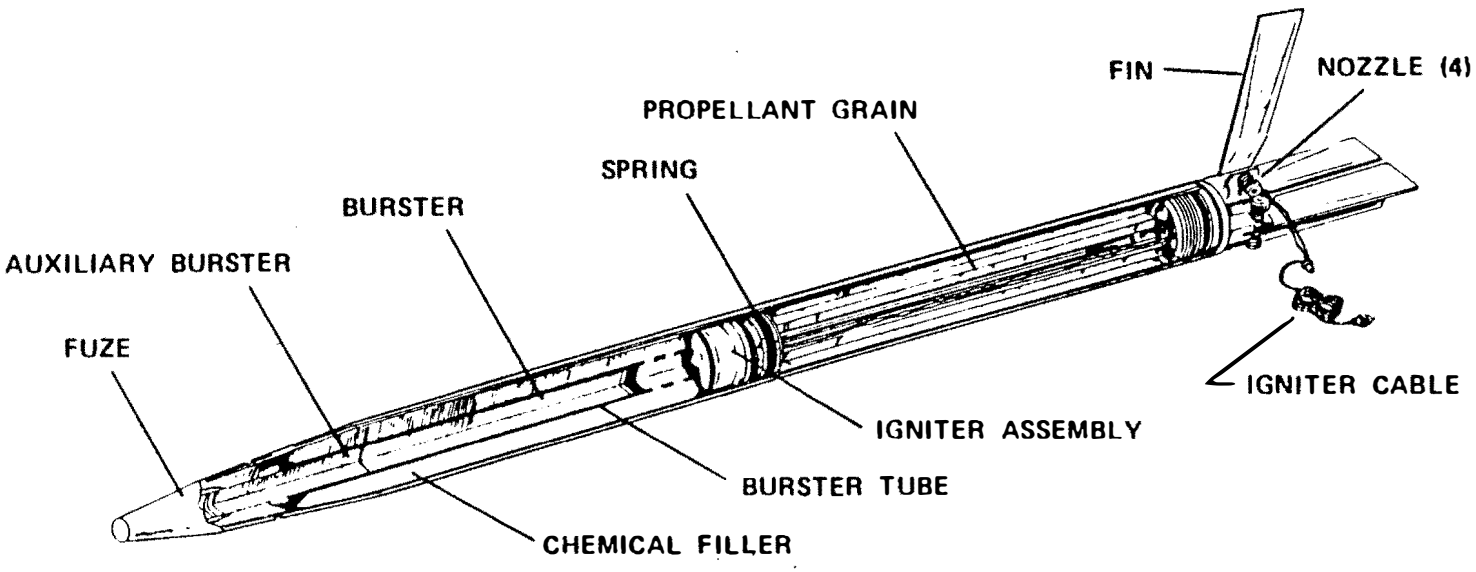

1.1. Components of M55 rockets.

Appendix F

"Through the Past...Defense Against Chemical Weapons"

Through the Past . . .



In preparing for a chemical attack on the United States, the U.S. Army Chemical Corps and the Office of Civil Defense Mobilization developed and designed civilian protection gear against chemical, biological and radiological warfare. These and other "space-age developments" were displayed at Andrews Air Force Base during the 1959 Armed Forces Day Celebration.

OFFICE OF THE PROGRAM MANAGER
FOR CHEMICAL DEMILITARIZATION
SAIL-PMI
ABERDEEN PROVING GROUND, MD 21010-5401
PHONE: (301) 671-2583



BULK RATE
U.S. POSTAGE
PAID
EDGEWOOD, MD
PERMIT NO.10

Printed with permission from the U. S. Army Public Affairs Office,
Office of the Program Manager for Chemical Demilitarization,
Aberdeen Proving Ground, Maryland.

Appendix G

Methodology

Appendix G

Methodology

I. The Research Paradigm

Essentially the research presented here is based on a case study of the U. S. Army's programme to destroy the U. S. stockpile of chemical weapons {known as the Chemical Stockpile Disposal Program (CSDP)} and of the citizens' movement that emerged to oppose the Army's on-site incineration plan. The research is based on field work took place between April 1991 and June 1992 in the towns of Berea and Richmond, Kentucky, the site of the Lexington Bluegrass Army Depot known as "LBAD" in Army documents and to the residents as "the depot."

This is also a work of ethnography as I have sought to capture the distinctive interpretations of reality that were made by members of the groups I studied---both the Army's perspective and that of the citizen activists. Since the first task of field work is to assemble "richly textured and accurate descriptions of events and activities in the lives of those studied" (Emerson 1983, p. 20), I found myself faced with a dilemma of sorts. The stockpile sites are located around the country at eight different locations throughout the continental United States as well as on a remote island in the South Pacific.

Lacking a grant with which to travel to many of the more remote places, my choice of fieldwork setting was dictated by mere convenience. As it happened, the choice of the LBAD site proved propitious for a number of reasons. It was here that the earliest opposition movement emerged ---we might say it "exploded" on the scene after one seemingly innocuous precipitating event (from the perspective of the Army). This being the case, I

was able to track the growth of the movement first-hand and to gauge the various responses this provoked in the Army.

My fieldwork was not limited only to this site, however. I was able through the many contacts I made in Berea and Richmond, KY to gain entrance to another field setting at the Aberdeen Proving Ground site in the Edgewood Area of Maryland. During the course of the field work, I made several trips to Aberdeen to talk with activists and to speak with Army personnel at the Proving Ground. Additionally, I was able to spend a good deal of time in Washington, D.C. interviewing military and civilian elites at the Pentagon. I also had the opportunity to visit with staffers from Greenpeace whose headquarters is also in Washington. Finally, because I was simultaneously involved in working at the Oak Ridge National Laboratory in Oak Ridge, Tennessee, I had the unique opportunity to see first-hand many of the Army documents relating to the Stockpile Disposal Program. In fact, I was actively involved in preparing many of the site studies undertaken in conjunction with the various protective action/evacuation scenarios. As one would expect, this dual role presented certain constraints upon my research, not the least of which was the fact that I had to curb my tendency to want to side with the activists and to "do good." Additionally, I had the problem of convincing citizens that I was <u>not</u> working for the Army. However, the other side of this dubious position was that it allowed me access to documents that would otherwise have completely escaped my purview and it gave me some credibility with the higher strata of decision-makers in the military, whose cooperation might not have been so easy to secure. But, of course, this is sheer conjecture.

II. Participant Observation

My first contact in the field was made through the intercession of a member of Greenpeace who provided me with a list of activists working at the LBAD site. I made my first contacts by telephone. I explained my interest in studying the problem of chemical weapons destruction and asked if a meeting could be set up. A cook-out was arranged and I was invited to meet all the members of the group (Common Ground) at one time. From there, I set up individual interviews and later I contacted the key players from the Richmond group and began a similar dialogue.

During the fourteen or so months of field work, I made as many trips as I could manage to the Berea/Richmond, Kentucky area. In the beginning, this was almost weekly. I usually stayed the whole week-end as I was working part-time in Oak Ridge, Tennessee and couldn't remain in the field on a full-time basis ---although I would have liked to. I usually stayed with activists or at the Boone Tavern Hotel. Often, my husband would accompany me on these trips and he proved to be a valuable co-researcher. Having him along also seemed to help me secure the trust of the activists. Lengthy interviews were conducted ---both formal and informal. Some lasted for hours and well into the night. Often these took place at Papa Lino's Restaurant --- a local restaurant in Berea and a favorite haunt of students and residents of the small college town. Interviews were not tape recorded. I took detailed notes and transcribed them immediately upon returning to my room. I also kept a log in which I made notes about the field setting.

While in the field, I took part in planning meetings (occasionally), attended a peace vigil held at the depot, met regularly with activists, attended numerous pot-luck suppers sponsored by the Berea Interfaith Task Force for

Peace, met with members of the press, attended a gala rock concert (fund raiser) and was invited to attend the press conference sponsored by the Chemical Weapons Working Group {CWWG} (Richmond, KY), the international coalition of activists from U. S. sites as well as from Hawaii and the former U. S. S. R. I never had the opportunity to attended any of the scoping meetings held at the sites. That phase of the project had been over by the time I entered the field. However, I availed myself of the opportunity to read over thousands of pages of transcripts of scoping meetings produced by the Army from meetings held around the country.

III. Primary Sources-The Interview Data:

Interviews were conducted with pertinent persons involved with the CSDP both in the field, in Maryland, at the Pentagon and at the Oak Ridge National Laboratory, Oak Ridge, Tennessee. A total of forty-five persons were interviewed during the course of the study (July 1991 through September 1994), although 95% of the interviews took place between 1991 and 1992.

A snowball sampling technique was utilized to obtain the names of likely interview candidates. Semi-structured interview schedules were develped in conjunction with each separate target group, i.e., activists, military elites, local political elites, members of the press, etc. During the course of the field work, multiple interviews were conducted with members of Common Ground/Kentucky Environmental Foundation, Inc., Concerned Citizens of Madison County (Kentucky), and Concerned Citizens for Maryland's Environment (at the Aberdeen Proving Ground site, Maryland). Additionally, I interviewed a number of political and military elites at the local, state and federal level.

For example, in addition to citizens involved in protesting the CSDP, I interviewed: military officers and civilian government officials at the Pentagon (including Federal Emergency Management Agency {FEMA} staff), professional staff members in the House of Representatives, local and state political elites (e.g., the local mayor, state regulators, etc.), research staff at the Oak Ridge National Laboratory and Army Public Affairs Officers. Further interviews were conducted with legal counsel for the citizens opposition movement, newspaper reporters, and Greenpeace activists in Washington D. C.

Interviews lasted an average of three hours, although many lasted five or six hours. Interviews were not tape recorded, although detailed notes were kept of all interviews and an informal interview schedule was drawn up --- although not always adhered to. Interviewees often offered interesting insights that might have been missed had a formal, more structured interview been forced upon them. Additionally, because of my close interaction with the activists over an extended period of time, I had ample opportunity to develop new insights as events progressed, thus enabling me to further refine the theoretical framework. (A list of those interviewed appears at the end of this section. Only job titles are given due to the privacy regulations governing human research subjects as required by the University of Tennessee's Human Subjects as required by the University of Tennessee's Human Subjects Committee. Other primary sources include my personal correspondence with activists, field notes, log book, minutes of ORNL staff meetings, etc.

IV. Secondary Data Analysis

The documents used for secondary data analysis include materials drawn from the following sources: (1) Oak Ridge National Laboratory published technical reports (TMs); (2) archival data from the Berea College Library, Southern Appalachian Collection which included: newspaper clip files from the years 1980 through 1992 pertinent to the CSDP as well as memorandums, personal letters, transcripts of public meetings, committee reports, minutes of ICCB meetings, etc.; (3) thousands of pages of transcripts from public scoping meetings; (4) the private records and personal correspondence of citizens with Army elites; (5) pertinent documents relating to the early history and activities of Common Ground and Concerned Citizens {at least three boxes of documents}; (5) news items and reports obtained from the Defense Technical Information Center (DTIC), Defense Logistics Agency, Alexandria, Virginia, an electronic database whose access is restricted to the military and their contractors; (6) transcripts of public meetings held at the ANAD (Alabama) site gathered by researchers at Auburn University; (7) hundreds of assorted Army documents relating to the CSDP and to CSEPP, the most noteworthy of which are, of course, Volumes 1, 2, and 3 of the Final Programmatic Environmental Impact Statement (FPEIS), final reports of all the Army-funded study groups, the MITRE report on continued use, etc.; (9) numerous government documents such as those produced by FEMA, the U. S. Arms Control and Disarmament Agency, the Office of Technology Assessment, the Federal Register, the National Academy of Sciences, the National Research Council, The Congressional Record, etc.; (10) media such as videotapes of scoping meetings, documentaries prepared by Greenpeace, and the videotape of CBS's *60 Minutes* segment on the

destruction of chemical weapons. Finally, the Army's two newsletters: *CSEPP Update* and *Chemical Demilitarization UPDATE* , and the opposition's newsletter, *Common Sense: A Newsletter of Common Ground* (funded by the Kentucky Environmental Foundation), were all very helpful in providing details and updated information about emerging events.

V. Triangulation. Throughout the course of the research, every effort was made to gather data from many sources and to check facts revealed in interviews with authoritative documentation. At times, this meant checking and rechecking certain factual information. Additionally, considerable effort was made to interpret the interview data in a fashion consistent with the differing world views presented by informants.

VI. Qualitative Data Analysis

The analysis of the interview data was done with the aid of a computer software package known as "HyperQual2" For Qualitative Analysis and Theory Development. HyperQual enhanced greatly my ability to manage the interview data. Nevertheless, while programs such as these surely are time savers, it is still up to the researcher to do the conceptual work. The program doesn't do your "thinking" for you. But I was glad to have had the opportunity to utilize this state-of-the-art technology in the analysis of the date. Of course, in the case of interview data in which tape recorders are used, programs such as HyperQual or Ethnograph are invaluable because taped interviews produce anywhere from thirty to forty pages of text.

Appendix G-1

Newspaper Clip Files 1984

List of Headlines

11/29	CBS films debate over nerve agent incinerator. (RR)
11/26	Nerve Gas Disposal refined at Utah site/ Army tests Nerve-Gas incinerator at Utah
11/27	Army's Plan to burn nerve gas has met skepticism in Madison Plan to incinerate nerve gas has met doubts in Madison (LHL)
11/26	Nerve Gas was once burned in open pits, sunk in ocean. (LHL)
11/26	Nerve-gas disposal refined at Utah site. (LHL)
11/25	Richmond lives anxiously with nerve-gas dilemma. (LHL)
11/24	Utah governor says nerve gas should be destroyed on site. (RR)
11/24	Kentuckyans arrive in Utah for tour of nerve-gas incinerator (RR)
11/22	Final word still out on nerve gas issue. (BC)
11/22	Officials reveal emergency evacuation plan. (RR)
11/21	Never Gas issue is discussed on ABC-TV
11/20	Disposing of nerve gas: incinerator seems safest. (LHL)
11/18	Report urges burning gas in Madison (LHL)
11/17	Evacuation plan for citizens revealed by disaster officials. (RR)
11/17	On-site nerve gas disposal recommended.(RR)
11/17	Nerve gas report suggests disposal at storage sites.(RR)
11/17	Report Recommends disposal of nerve gas at current storage sites.(CJ)
11/14	Officials Reveal emergency evacuation plan. (RR)
10/25	Doctor explains physical effects of nerve gas. (RR)
9/6	Riding it Out on the Horns of a Dilemma. (BC)
8/29	Citizens respond to task force report. (RR)
8/29	Hauling missiles to Utah would entail risks, too (LH)
8/23	Army strikes out on tour of Utah facility (BC)

8/27	77-percent of locals opposed to Army's nerve gas incinerator.(RR)
8/23	Burning of one pound of nerve gas produces 1.59 lbs. residue. (RR)
8/23	Task Force Receives Briefing (photo in article). Owen Grise. (RR)
8/22	At Tooele Depot : Scrap furnace used to burn nerve gas.(RR)
8/20	Unconvinced. (RR)
8/19	Some options to nerve-gas incinerator would spread danger(CJ)
8/19	*Visitors find depot welcome in Utah (LHL)
8/19	Task force returns from Tooele depot.(RR)
8/17	Tour doesn't change minds of task force.(RR)
8/16	Task force receives 4-hour briefing in Utah. (RR)
8/14	Nerve gas task force leaves for Utah Wednesday. (RR)
8/11	Army to abide by state EPA regulations.(RR)
8/10	Nerve Gas inspection permitted. (LHL)
8/9	State says Army must obey waste law (LHL)
8/9	Army plans meeting on rocket transport(BC)
8/9	Army finally on right track on nerve gas issue (BC)
8/7	New option is offered to dispose of nerve gas (CJ)
8/3	Army delays hearing on shipping nerve gas rockets to Utah(LHL)
8/2	Funds denied for nerve gas disposal at depot (BC)
8/4	Army talks on moving nerve gas set for '85 (LH)
8/1	EVACUATION for gas accident is discussed. (RR)
9/13	Army may fly gas out of Madison County (BC)
7/26	Nerve gas debate highlights U.S. polity (BC)
7/26	Congress cuts nerve gas funds .(RR)
7/19	Hopkins says Army Depot is getting new commander.(RR)
7/19	Ford questions the safety of rockets at Army depot.(RR)
7/12	Army invites task force to visit incinerator in Utah(BC)
7/11	Army tries to calm fears about disposal of old nerve gas(CJ)
5/28	Army may import nerve gas to plant, EPA alleges. (RR)

6/21	General says depot won't get more nerve gas(LHL)
6/21	Depot won't get more nerve gas, Army says: Citizens' panel voices concerns on incinerator.(CJ)
6/19	Huddleston says Congressional inquiry possible on nerve gas. (RR)
6/15	ARMY depot to hold open house (RR)
6/15	Nerve gas group sets objectives (LHL)
6/7	Depot workers are also concerned about safety(LHL)
5/31	County seeks Congressional investigation.(RR)
5/28	Army may import nerve gas to plant, EPA alleges. (RR)
5/11	Madison requests nerve gas probe. (LHL)
4/19	Other options still open for nerve gas facility
4/19	Army wants to improve its image.(RR)
3/6	Court opposes destruction of nerve gas here (RR)
3/1	Ordinance to double number of employees(BC)
2/23	Additional 2,000 jobs coming to Army depot at Av. (RR)
2/23	Residents against plan to dispose of nerve agent(BC)
2/19	No easy answer to gas disposal (LHL)
2/18	Nerve gas disposal draws heavy opposition: Residents distrust weapons disposal plan.(RR)
2/17	Madison area residents denounce Army plan to incinerate nerve gas. (LHL)
2/9	Public hearing set on disposal of gas. (BC)

Legend:

BC =	Berea Citizen
LHL=	Lexington-Herald Leader
RR =	Richmond Register
CJ =	Courier Journal

Appendix H

Nerve Gas Chronology

Nerve Gas Chronology

A brief history of events pertaining to the chemical weapons stockpile at the Lexington-Bluegrass Army Depot at Richmond, Kentucky. All events have been verified and documented.

Early 1940's:	Lexington Bluegrass Army Depot (LBAD) activity begun.
Early to Mid 1960's:	M55 rockets containing nerve agent transported by rail into LBAD.
Early 1970's:	Some nerve agent moved out by rail under strict secrecy.
August 1979:	Improper burning of smoke pots causes a toxic cloud, resulting in 45 local citizens hospitalized. The Army denies responsibility until independent observers identify LBAD as the source.
February 1984:	Army announces hearing to explain plans for nerve gas incinerator. Over 300 citizens attend, overflowing the base cafeteria and expressing overwhelming rejection of the plan.
Spring 1984:	"Concerned Citizens of Madison County" is organized in response to the Army briefing.
June 1984:	LBAD Security Guard kidnaps two co-workers. Incident ends in shoot-out with Richmond City Police.
April 1986:	LBAD Employee barricades himself in his Richmond apartment: shots fired at police.
June 1986:	General munitions storage igloo at LBAD explodes due to incorrect storage procedures.
July 1986:	Army issues Draft Programmatic Environmental Impact Statement.
August 1986:	Public hearing on the Draft Programmatic Environmental Impact Statement. Army agrees to fund local study group.
January 1987:	Community Review Support Contract signed to fund study team headed by Dr. Oris Blackwell.
November 1987:	Community Review group issues report recommending air transport of the Richmond stockpile to Tooele, Utah.
January 1988:	Army releases Final Programmatic EIS recommending on-site incineration.
January 29, 1988:	Over 2000 citizens pack the gymnasium at Madison Central High School for meeting with Army Representatives. State and local officials join citizens in rejection of the plan to build an incinerator in Madison County.
February 1989:	Army announces Programmatic Record of Decision to build incinerators at all eight sites, including Richmond, and that the Site Specific EIS will not re-evaluate the options for each site: it will only be used to decide where on the depot to build the incinerator.
November 1989:	Congress approves funding for a study of possible on-going use of the incinerators after the nerve agent is burned.
May 1990:	Army training exercise uses scenario of local protesters in conjunction with terrorist activity. Scenario includes protest at front gate, gunfire, guards wounded, terrorist sniper "disposed of."
July 1990:	Chemical stockpile moved from Germany.

Compiled by Common Ground, 620 Blue Lick Rd., Berea, KY 40403

Appendix I

Demographic Data for Each Site

Appendix I-1

Demographic Data for Aberdeen Proving Ground (APG)

1990 AND1980 US CENSUS DATA

	United States		Maryland		Baltimore County		Harford County		Kent County	
	1990	1980	1990	1980	1990	1980	1990	1980	1990	1980
Urban and Rural Residence										
Total Population	248,709,873	226,545,805	4,781,468	4,216,975	692,134	655,615	182,132	145,930	17,842	16695
Urban Population	187,051,543	167,054,638	3,887,981	3,386,693	631,280	604,132	126,975	91,190	4,005	3,300
Percent	75.21%	73.74%	81.30%	80.31%	91.20%	92.15%	69.70%	62.49%	22.40%	19.77%
Rural Population	61,658,330	59,491,167	893,487	830,282	60,854	51,483	55,157	55,136	13,837	13,395
Percent	24.79%	26.26%	18.70%	19.69%	8.80%	7.85%	30.30%	37.78%	77.60%	80.23%
Farm Population	3,871,583	5,617,903	32,596	44,934	1,734	*	1,102	*	1,207	*
Percent (of total population)	1.56%	2.48%	0.68%	1.07%	0.25%	*	0.61%	*	0.00%	*
Educational Attainment										
Persons 25 Years and over	158,868,436	132,835,687	3,122,665	1,952,261	473,574	411,225	115,199	62,565	11,822	10,260
Percent high school graduate of higher	75.20%	66.50%	78.40%	69.90%	78.40%	68.30%	81.60%	64.10%	71.40%	53.90%
Percent Bachelor's degree or higher	20.30%	16.20%	26.50%	22.10%	25.00%	18.80%	21.50%	17.10%	16.90%	12.60%
Employment										
Persons 16 years and over	191,829,271	171,214,258	3,736,830	3,214,983	556,056	520,515	138,391	106,697	14,467	13,271
Persons in labor force	125,182,378	106,084,668	2,639,896	2,108,754	381,531	345,318	102,019	72,031	9,197	7,692
Percent	65.26%	61.96%	70.6	65.59%	68.60%	66.30%	73.70	67.51%	63.6	57.96%
Civilian labor force	123,473,450	104,449,817	2,592,878	2,065,512	380,440	344672	96,765	66,613	9,128	7,664
Employed	115,681,202	97,639,355	2,481,342	1,946,612	366,276	327,459	93,500	62,729	8,822	7,084
Unemployed	7,792,248	6,810,462	111,536	118,900	14,164	17,213	3,265	3,884	306	580
Percent Unemployed	6.31%	6.52%	4.30%	5.76%	3.70%	5.26%	3.40%	6.19%	3.47%	7.57%
Armed Forces	1,708,928	1,634,851	47,018	43,242	1,091	646	5,254	5,418	69	28
Percent	1.37%	1.54%	1.26%	2.05%	0.20%	0.19%	3.80%	7.52%	0.48%	0.36%
Income (In dollars)	In 1989	In 1979	In 1989	In 1979	In 1989	In 1979	In 1989	In 1979	In 1989	In 1979
Median household income	$30,056	$16,841	$39,386	$20,281	$38,837	21640	$41,680	$27,612	$30,104	$13,979
Median family income	$35,225	$19,917	$45,034	$23,112	$44,502	$24,413	$45,923	$30,328	$35,231	$16,347
Median non-family income	$17,240	$6,695	$24,482	$8,398	$24,511	$10,163	$23,356	$13,004	$14,212	$4,306
Per-capita income	$14,420	$7,298	$17,730	$8,293	$18,658	$9,044	$16,612	$10,065	$15,488	$6,502
Poverty Status (1989)	In 1989	In 1979	In 1989	In 1979	In 1989	In 1979	In 1989	In 1979	In 1989	In 1979
All persons for whom poverty status is determined	241,977,859	220,845,766	4,660,591	4,118,381	677,714	642595	178,074	141,910	16,928	16,085
Persons below the poverty level	31,742,864	27,392,580	385,296	404,560	37,154	33,861	9,122	10,638	1,943	2,129
Percent below the poverty level	13.12%	12.40%	8.27%	9.82%	5.48%	5.27%	5.12%	7.50%	11.48%	13.24%

* Data not provided

1-2

Demographic Data for Anniston Army Ammunition Depot (ANAD)

1990 AND1980 US CENSUS DATA

	United States		Alabama		Calhoun County		Talladega County		Cleburne County	
	1990	1980	1990	1980	1990	1980	1990	1980	1990	1980
Urban and Rural Residence										
Total Population	248,709,873	226,545,805	4,040,587	3,893,888	116,034	119,761	74,107	73,826	12,730	12,595
Urban Population	187,051,543	167,054,638	2,437,715	2,337,033	82,726	90,459	39,081	37,396	2,908	3,014
Percent	75.21%	73.74%	60.30%	60.02%	71.30%	75.53%	52.70%	50.65%	22.80%	23.93%
Rural Population	61,658,330	59,491,167	1,602,872	1,556,855	33,308	29,302	35,026	36,430	9,822	9581
Percent	24.79%	26.26%	39.70%	39.98%	28.70%	24.47%	47.30%	49.35%	77.20%	76.07%
Farm Population	3,871,583	5,617,903	59,349	87,757	768	*	674	*	601	*
Percent (of total population)	1.56%	2.48%	1.47%	2.25%	0.66%	*	0.91%	*	4.72%	*
Educational Attainment										
Persons 25 Years and over	158,868,436	132,835,687	2,545,969	2,217,315	72,445	65,341	46,091	40,547	8,101	7,425
Percent high school graduate or higher	75.20%	66.50%	66.90%	56.50%	67.40%	57.60%	60.70%	49.10%	49.80%	38.30%
Percent Bachelor's degree or higher	20.30%	16.20%	15.70%	12.20%	14.20%	11.00%	10.20%	7.80%	6.50%	5.80%
Employment										
Persons 16 years and over	191,829,271	171,214,258	3,103,529	2,881,348	90,240	90,228	56,181	52,448	9,816	9,327
Persons in labor force	125,182,378	106,084,668	1,895,361	166,352	55,865	54,762	32,687	29,656	6,104	5,587
Percent	65.26%	61.96%	61.10%	57.80%	61.90%	60.70%	58.20%	56.50%	62.20%	59.90%
Civilian labor force	123,473,450	104,449,817	1,870,381	1,634,743	51,249	46,833	32,546	29,414	6,074	5,572
Employed	115,681,202	97,639,355	1,741,794	1,511,928	46,899	42,549	30,069	26,755	5,741	5,232
Unemployed	7,792,248	6,810,462	128,587	122,815	4,350	4,284	2,477	2,659	333	340
Percent Unemployed	6.31%	6.52%	6.90%	7.51%	8.50%	9.15%	7.60%	9.04%	5.50%	6.10%
Armed Forces	1,708,928	1,634,851	24,980	30,609	4,616	7,929	141	242	30	15
Percent	1.37%	1.54%	0.80%	18.40%	5.12%	14.48%	0.25%	0.82%	0.31%	0.27%
Income (in dollars)	In 1989	In 1979	In 1989	In 1979	In 1989	In 1979	In 1989	In 1979	In 1989	In 1979
Median household income	$30,056	$16,841	$23,597	$13,669	$23,802	$13,665	$21,378	$12,625	$21,158	$12,782
Median family income	$35,225	$19,917	$28,688	$16,347	$28,340	$16,131	$25,225	$14,806	$25,900	$14,642
Median non-family income	$17,240	$6,695	$10,894	$4,589	$10,765	$4,327	$8,540	$3,826	$6,633	$3,637
Per-capita income	$14,420	$7,298	$11,486	$5,894	$10,704	$5,576	$9,700	$4,981	$9,876	$5,013
Poverty Status	In 1989	In 1979	In 1989	In 1979	In 1989	In 1979	In 1989	In 1979	In 1989	In 1979
All persons for whom poverty status is determined	241,977,859	220,845,766	3,945,798	3,813,014	110,981	111,618	71,619	71,992	12,653	12,550
Persons below the poverty level	31,742,864	27,392,580	723,614	719,905	17,385	18,231	14,435	14,973	1,936	2,093
Percent below the poverty level	13.12%	12.40%	18.34%	18.90%	15.66%	16.33%	20.16%	20.80%	15.30%	16.70%

* Data not provided

Appendix I-3

Demographic Data for Lexington Bluegrass Army Depot (LBAD)

1990 US CENSUS OF POPULATION AND HOUSING SUMMARY

Summary Tape File 3A

	United States	Kentucky	Clark County	Winchester	Madison County	Richmond	Berea	Estill County	Irvine
Urban and Rural Residence									
Total Population	248,709,873	3,685,296	29,496	15,799	57,508	21,155	9,126	14,614	2,816
Urban Population	187,051,543	1,910,028	15,799	15,799	30,281	21,155	9,126	2,816	2,816
Percent	75.21	51.8	53.6	100	52.7	100	100	19.3	100
Rural Population	61,658,330	1,775,268	13,697	0	27,227	0	0	11,798	0
Percent	24.79	48.2	46.4	0	47.3	0	0	80.7	0
Farm Population	3,871,583	174,204	1,608	0	2,666	0	0	807	0
Percent (of total population)	1.56%	4.73%	5.45%	0.00%	4.64%	0.00%	0.00%	5.52%	0.00%
Educational Attainment									
Persons 25 Years and over	158,868,436	2,333,833	19,172	10,165	32,274	10,054	5,141	9,170	1,845
Percent high school graduate or higher	75.20	64.6	65.1	62.4	64.8	65.4	66.5	46.5	46.7
Percent Bachelor's degree or higher	20.30	13.6	13	11.4	19.1	19.6	26.8	5.4	7.4
Employment									
Persons 16 years and over	191,829,271	2,838,709	22,682	12,066	46,210	18,132	7,360	11,134	2,187
Persons in labor force	125,182,378	1,718,145	14,175	7,354	29,576	10,716	4,871	5,640	955
Percent	65.26	60.5	62.5	60.9	64	59.1	66.2	50.7	43.7
Civilian labor force	123,473,450	1,688,314	14,150	7,344	29,444	10,646	4,854	5,637	955
Employed	115,681,202	1,563,960	13,222	6,890	27,242	9,474	4,565	4,866	857
Unemployed	7,792,248	124,354	928	454	2,202	1,172	289	771	98
Percent Unemployed	6.31	7.4	6.6	6.2	7.5	11	6	13.7	10.3
Armed Forces	1,708,928	29,831	25	10	132	70	17	3	0
Percent	1.37%	1.05%	0.11%	0.08%	0.29%	0.39%	0.23%	0.03%	0.00%
Income (1989, in dollars)									
Median household income	$30,056	$22,534	$25,323	$21,543	$21,388	$15,588	$21,622	$16,056	$15,366
Median family income	$35,225	$27,028	$29,089	$21,543	$27,052	$21,441	$26,391	$19,223	$22,143
Median non-family income	$17,240	$11,471	$12,663	$11,581	$10,111	$9,440	$12,288	$6,681	$8,403
Per-capita income	$14,420	$11,153	$11,655	$10,832	$10,029	$8,771	$9,802	$7,474	$7,972
Poverty Status (1989)									
All persons for whom poverty status is determined	241,977,859	3,582,459	29,119	15,623	51,209	16,151	7,865	14,465	2,705
Persons below the poverty level	31,742,864	681,827	5,142	3,383	10,859	5,112	1,365	4,199	801
Percent below the poverty level	13.12%	19.03%	17.66%	21.65%	21.21%	31.65%	17.36%	29.03%	29.61%

I-4

Demographic Data for Newport Army Ammunition Plant (NAAP)

1990 AND1980 US CENSUS DATA

	United States		Indiana		Vermillion County	
	1990	1980	1990	1980	1990	1980
Urban and Rural Residence						
Total Population	248,709,873	226,545,805	5,544,159	5,490,224	16,773	18,229
Urban Population	187,051,543	167,054,638	3,596,017	3,525,298	5,040	5,267
Percent	75.21%	73.74%	64.86%	64.21%	30.05%	28.89%
Rural Population	61,658,330	59,491,167	1,948,142	1,964,926	11,733	12,962
Percent	24.79%	26.26%	35.14%	35.79%	69.95%	71.11%
Farm Population	3,871,583	5,617,903	188,133	*	748	*
Percent (of total population)	1.56%	2.48%	3.39%	*	4.46%	*
Educational Attainment						
Persons 25 Years and over	158,868,436	132,835,687	3,489,470	3,135,772	11,163	11,268
Percent high school graduate of higher	75.20%	66.50%	75.60%	66.40%	72.10%	60.50%
Percent Bachelor's degree or higher	20.30%	16.20%	15.60%	12.50%	7.80%	7.80%
Employment						
Persons 16 years and over	191,829,271	171,214,258	4,248,923	4,080,934	13,082	13,749
Persons in labor force	125,182,378	106,084,668	2,798,370	2,575,284	7,538	7,609
Percent	65.26%	61.96%	65.86%	63.11%	57.62%	55.34%
Civilian labor force	123,473,450	104,449,817	2,788,838	2,566,755	7,507	7,590
Employed	115,681,202	97,639,355	2,628,695	2,366,263	6,952	6,944
Unemployed	7,792,248	6,810,462	160,143	200,492	555	646
Percent Unemployed	6.31%	6.52%	5.74%	7.81%	7.39%	8.51%
Armed Forces	1,708,928	1,634,851	9,532	8,529	31	19
Percent	1.37%	1.54%	0.34%	0.33%	0.41%	0.25%
Income (in dollars)	In 1989	In 1979	In 1989	In 1979	In 1989	In 1979
Median household income	$30,056	$16,841	$28,797	$17,582	$22,339	$14,119
Median family income	$35,225	$19,917	$34,082	$20,535	$29,100	$17,141
Median non-family income	$17,240	$6,695	$15,379	$6,389	$10,177	$6,556
Per-capita income	$14,420	$7,298	$13,149	$7,142	$11,217	$6,151
Poverty Status (1989)	In 1989	In 1979	In 1989	In 1979	In 1989	In 1979
All persons for whom poverty status is determined	241,977,859	220,845,766	5,372,388	5,341,438	16,494	18,016
Persons below the poverty level	31,742,864	27,392,580	573,632	516,190	1,925	1,925
Percent below the poverty level	13.12%	12.40%	10.68%	9.66%	11.67%	10.68%

* Data not provided

I-5

Demographic Data for Pine Bluff Arsenal (PBA)

1990 US CENSUS OF POPULATION AND HOUSING SUMMARY
Summary Tape File 3A

	United States	Arkansas	Jefferson County	Pine Bluff	White Hall	Altheimer	Wabbaseka	Redfield	Saline County
Urban and Rural Residence									
Total Population	248,709,873	2,350,725	85,487	57,140	3,849	988	378	1,082	64,183
Urban Population	187,051,543	1,258,198	62,004	57,140	3,849	0	0	0	31,178
Percent	75.21	53.5	72.5	100	100	0	0	0	48.6
Rural Population	61,658,330	1,092,527	23,483	0	0	988	378	1,082	33,005
Percent	24.79	46.5	27.5	0	0	100	100	100	51.4
Farm Population	3,871,583	63,589	615	0	0	24	11	0	475
Percent (of total population)	1.56%	2.71%	0.72%	0.00%	0.00%	2.43%	2.91%	0.00%	0.74%
Educational Attainment									
Persons 25 Years and over	158,868,436	1,496,150	51,741	34,176	2,379	557	225	657	41,032
Percent high school graduate or higher	75.20	66.3	65.9	65.5	77.4	49.7	40.9	75 8	72 9
Percent Bachelor's degree or higher	20.30	13.3	14.6	16.6	12.6	5.9	8.4	11.9	11.9
Employment									
Persons 16 years and over	191,829,271	1,800,056	64,239	42,433	2,830	688	262	785	48,684
Persons in labor force	125,182,378	1,077,151	37,160	24,503	1,899	351	127	533	31,566
Percent	65.26	59.8	57.8	57.7	67.1	1	48.5	67.9	64.8
Civilian labor force	123,473,450	1,066,368	36,899	24,390	1,887	351	127	528	31,496
Employed	115,681,202	994,289	33,236	21,683	1,720	295	102	510	29,887
Unemployed	7,792,248	72,079	3,663	2,707	167	56	25	18	1,609
Percent Unemployed	6.31	6.8	9.9	11.1	8.9	6	19.7	3.4	5.1
Armed Forces	1,708,928	10,783	261	113	12	0	0	5	70
Percent	1.37%	0.68%	0.41%	0.27%	0.42%	0.00%	0.00%	0.64%	0.14%
Income (1989, in dollars)									
Median household income	$30,056	$21,147	$21,322	$19,143	$28,768	$11,422	$14,688	$30,761	$28,262
Median family income	$35,225	$25,395	$26,360	$24,442	$31,429	$16,111	$17,500	$35,729	$31,855
Median non-family income	$17,240	$10,295	$9,558	$9,548	$16,071	$4,999	$11,250	$9,700	$11,951
Per-capita income	$14,420	$10,520	$9,852	$9,530	$11,428	$5,989	$6,958	$11,533	$11,677
Poverty Status (1989)									
All persons for whom poverty status is determined	241,977,859	2,292,037	81,244	55,162	3,840	986	378	1,082	62,932
Persons below the poverty level	31,742,864	437,089	19,410	15,283	329	388	188	102	5,845
Percent below the poverty level	13.12%	19.07%	23.89%	27.71%	8.57%	39.35%	49.74%	9.43%	9.29%

I-6

Demographic Data for Pueblo Army Depot Activity (PUDA)

1990 US CENSUS OF POPULATION AND HOUSING SUMMARY

Summary Tape File 3A

	United States	Colorado	Pueblo County	Pueblo City	Boone	Avondale Division	Crowley County	Crowley Town	Ordway Town	El Paso County
Urban and Rural Residence										
Total Population	248,709,873	3,294,394	123,051	98,640	338	2,350	3,946	243	1,016	397,014
Urban Population	187,051,543	2,715,749	110,652	98,640	0	0	0	0	0	374,089
Percent	75.21	82.4	89.9	100	0	0	0	0	0	94.2
Rural Population	61,658,330	578,645	12,399	0	338	2,350	3,946	243	1,016	22,925
Percent	24.79	17.6	10.1	0	100	100	100	100	100	5.8
Farm Population	3,871,583	45,118	917	0	0	272	394	29	0	868
Percent (of total population)	1.56%	1.37%	0.75%	0.00%	0.00%	11.57%	9.98%	11.93%	0.00%	0.22%
Educational Attainment										
Persons 25 Years and over	158,868,436	2,107,072	79,524	63,625	210	1,455	2,758	137	704	240,251
Percent high school graduate or higher	75.20	84.4	73.9	73.2	57.6	65	70.3	54.7	61.4	88.3
Percent Bachelor's degree or higher	20.30	27	14	13.8	1	12.6	8	7.3	11.2	25.8
Employment										
Persons 16 years and over	191,829,271	2,518,482	94,058	75,610	227	1,804	3,199	166	790	298,563
Persons in labor force	125,182,378	1,771,107	52,310	41,287	100	1,002	1,143	58	365	215,050
Percent	65.26	70.3	55.6	54.6	44.1	55.5	35.7	34.9	46.2	72
Civilian labor force	123,473,450	1,732,719	52,107	41,146	100	1,002	1,141	58	363	186,047
Employed	115,681,202	1,633,281	47,431	37,313	90	944	1,067	49	336	172,530
Unemployed	7,792,248	99,438	4,676	3,833	10	58	74	9	27	13,517
Percent Unemployed	6.31	5.7	9	9.3	10	5.8	6.5	15.5	7.4	7.3
Armed Forces	1,708,928	38,388	203	141	0	0	2	0	2	29,003
Percent	1.37%	1.52%	0.22%	0.19%	0.00%	0.00%	0.06%	0.00%	0.25%	9.71%
Income (1989, in dollars)										
Median household income	$30,056	30,140	21,553	20,501	14,167	20,526	16,088	11,875	14,500	29,604
Median family income	$35,225	35,930	25,784	24,997	16,563	22,303	18,345	13,000	18,144	33,932
Median non-family income	$17,240	18,948	11,702	11,487	6,762	15,395	9,455	6,667	8,956	19,164
Per-capita income	$14,420	14,821	10,347	10,168	6,385	10,107	6,978	4,448	8,533	13,664
Poverty Status (1989)										
All persons for whom poverty status is determined	241,977,859	3,212,550	120,239	95,984	338	2,350	2,908	243	963	380,785
Persons below the poverty level	31,742,864	375,214	24,318	20,778	145	502	693	112	234	39,519
Percent below the poverty level	13.12%	11.68%	20.22%	21.65%	42.90%	21.36%	23.83%	46.09%	24.30%	10.38%

Appendix I-7

Demographic Data for Umatilla Army Depot (UMDA)

1990 US CENSUS OF POPULATION AND HOUSING SUMMARY — Summary Tape File 3A

							Washington Border Towns				
	United States	Oregon	Umatilla County	Hermiston	Stanfield	Morrow County	Boardman	Irrigon	Finley	Kennewick	Pasco
Urban and Rural Residence											
Total Population	248,709,873	2,842,321	59,249	10,040	1,567	7,625	1,432	692	4,897	42,155	20,337
Urban Population	187,051,543	2,002,999	33,570	10,040	0	0	0	0	4,897	42,155	19,935
Percent	75.21	70.5	56.7	100	0	0	0	0	100	100	98
Rural Population	61,658,330	839,322	25,679	0	1,567	7,625	1,432	692	0	0	402
Percent	24.79	29.5	43.3	0	100	100	100	100	0	0	2
Farm Population	3,871,583	68,729	2,636	0	33	629	0	0	0	0	22
Percent (of total population)	1.56%	2.42%	4.48%	0.00%	2.11%	8.25%	0.00%	0.00%	0.00%	0.00%	0.11%
Educational Attainment											
Persons 25 Years and over	158,868,436	1,855,369	37,316	6,023	848	4,731	769	444	3,046	24,989	10,882
Percent high school graduate or highe	75.20	81.5	75.1	71.9	60.4	73.9	68.4	68.9	73.5	82.5	57.7
Percent Bachelor's degree or higher	20.30	20.6	13.3	11.7	3.8	11.8	15.9	6.8	4.2	19.8	8.8
Employment											
Persons 16 years and over	191,829,271	2,191,764	44,531	7,220	1,053	5,544	980	500	3,572	30,296	14,010
Persons in labor force	125,182,378	1,410,695	28,016	4,681	706	3,571	722	258	2,367	20,886	8,757
Percent	65.26	64.4	62.9	64.8	67	64.4	73.7	51.6	66.3	68.9	62.5
Civilian labor force	123,473,450	1,407,143	27,984	4,668	704	3,558	714	256	2,367	20,855	8,734
Employed	115,681,202	1,319,960	25,612	4,197	635	3,238	641	236	2,227	19,393	7,726
Unemployed	7,792,248	87,183	2,372	471	69	320	73	20	140	1,462	1,008
Percent Unemployed	6.31	6.2	8.5	10.1	9.8	9	10.2	7.8	5.9	7	11.5
Armed Forces	1,701,928	3,552	32	13	2	13	8	2	0	31	23
Percent	1.37%	0.16%	0.07%	0.18%	0.19%	0.23%	0.82%	0.40%	0.00%	0.10%	0.16%
Income (1989, in dollars)											
Median household income	$30,056	$27,250	$22,791	$20,674	$23,564	$23,969	$21,336	$20,655	$30,175	$28,261	$17,897
Median family income	$35,225	$32,336	$27,459	$25,501	$24,449	$26,825	$22,468	$21,726	$32,419	$35,024	$21,433
Median non-family income	$17,240	$16,009	$12,500	$12,783	$12,031	$13,094	$14,896	$9,449	$20,893	$17,609	$9,904
Per-capita income	$14,420	$13,418	$11,178	$9,729	$8,815	$10,412	$8,842	$8,632	$11,165	$12,767	$8,016
Poverty Status (1989)											
Is determined	241,977,859	2,775,907	57,046	9,927	1,551	7,539	1,415	690	4,883	41,750	19,904
Persons below the poverty level	31,742,864	344,867	9,419	1,962	290	1,141	313	114	703	5,814	6,570
Percent below the poverty level	13.12%	12.42%	16.51%	19.76%	18.70%	15.13%	22.12%	16.52%	14.40%	13.93%	33.01%

I-8

Demographic Data for Tooele Army Depot (TEAD)

1990 US CENSUS OF POPULATION AND HOUSING SUMMARY

Summary Tape File 3A

	United States	Utah	Tooele County	Tooele City	Stockton	Rush Valley	Vernon	Stansbury Park CDP	Ophir	
Urban and Rural Residence										
Total Population	248,709,873	1,722,850	26,601	13,887	408	375	174	1,074	15	
Urban Population	187,051,543	1,499,375	18,174	13,887	0	0	0	0	0	
Percent	75.21	87.00	68.30	100.00	0.00	0.00	0.00	0.00	0.00	
Rural Population	61,658,330	223,475	8,427	0	408	375	174	1,074	15	
Percent	24.79	13.00	31.70	0.00	100.00	100.00	100.00	100.00	100.00	
Farm Population	3,871,583	11,685	254	0	0	26	50	0	0	
Percent (of total population)	1.56%	0.68%	0.95%	0.00%	0.00%	6.93%	28.74%	0.00%	0.00%	
Educational Attainment										
Persons 25 Years and over	158,868,436	897,321	14,518	8,027	220	235	96	628	14	
Percent high school graduate or higher	75.20	85.1	77.3	77.3	73.2	81.3	89.6	93.6	85.7	
Percent Bachelor's degree or higher	20.30	22.3	11.3	11.2	1.8	3.8	8.3	26.8	7.1	
Employment										
Persons 16 years and over	191,829,271	1,154,039	17,988	9,685	254	274	125	739	14	
Persons in labor force	125,182,378	784,501	12,345	6,238	173	188	97	546	10	
Percent	65.26	68	68.6	64.4	68.1	68.6	77.6	73.9	71.4	
Civilian labor force	123,473,450	777,448	11,968	6,162	173	188	97	538	10	
Employed	115,681,202	736,059	11,037	5,533	153	171	95	505	10	
Unemployed	7,792,248	41,389	931	629	20	17	2	33	0	
Percent Unemployed	6.31	5.3	7.8	10.2	11.6	9	2.1	6.1	0	
Armed Forces	1,708,928	7,053	377	76	0	0	0	8	0	
Percent	1.37%	0.61%	2.10%	0.78%	0.00%	0.00%	0.00%	1.08%	0.00%	
Income (1989, in dollars)										
Median household income	$30,056	$29,470	$30,178	$29,784	$28,214	$36,389	$33,125	$45,000	$26,875	$
Median family income	$35,225	$33,246	$33,507	$33,389	$32,500	$37,222	$35,750	$50,914	$26,875	$
Median non-family income	$17,240	$15,969	$14,860	$14,217	$12,500	$21,250	$26,875	$25,375	$22,500	$
Per-capita income	$14,420	$11,029	$10,568	$11,090	$9,038	$14,073	$10,685	$14,385	$21,523	
Poverty Status (1989)										
All persons for whom poverty status is determined	241,977,859	1,694,357	26,273	13,746	407	375	174	1,074	15	
Persons below the poverty level	31,742,864	192,415	3,012	1,641	42	1	3	6	0	
Percent below the poverty level	13.12%	11.36%	11.46%	11.94%	10.32%	0.27%	1.72%	0.56%	0.00%	

Appendix J

Sample Interview Schedules
CSDP Study

APPENDIX

Interview Guidelines for Grassroots Activists

1. History of the group. When it was formed, why, and how; social characteristics of: a) membership b) steering committee; membership number, number of active members; organizational force, legal status; relationship with other opposition groups; relationship with the local, state and national governments, relationship with the media; ideology; resource base, etc.

Sample question: "Please describe the early beginnings of your group." _____(name of site).

2. What historically has been the relationship between the Army and the community?
3. What do you see as the major issue?
4. What are the goals of the movement, both short term and long term? (For this specific group at this specific site.)
5. How do you feel about the Army's claim that delays in implementing the program are a bad thing?
6. How is your group structured?
7. How are decisions made with regard to tactics/strategies?
8. How often and in what manner do you communicate with other groups in the coalition?
9. Some people believe that Greenpeace is behind the mobilization of citizens in opposing the incineration of chemical weapons. What role (if any) has Greenpeace played in mobilizing people to oppose the Army's plan?
10. What strategies have been used thus far to oppose the CSDP?
11. About what percentage of citizens in this community support your efforts to oppose the Army's plan? (Just a "guesstimate")
12. Do you actively recruit new members?
13. How has the Army responded thus far to the opposition?
14. Do you think the NEPA process, specifically, the scoping meetings were useful forums for airing your views? Why/ Why not?
15. What, in your opinion, has been the impact of citizen opposition on the Army's plan?
16. Describe what happened at the last scoping meeting you attended? (Give date and time)

17. What do you do (as a group) when you need goods, services, e.g., legal advice, postage, printing, etc. ?

Informal Interview Schedule

Military/Government Elites

Research Project
Chemical Stockpile Disposal Program

1. In 1990, Laura Hayes Holgate did a master's thesis entitled, "The Politics of Chemical Weapons Production," in which she argued that there has been "a high degree of public scrutiny of the CSDP." DO YOU AGREE?

2. Thus far, what has been the Army's position on the public opposition to incineration?

3. Statement: A reporter for the New York Times said, "In Utah and Alabama, citizens say they are satisfied with how the Army conducted itself and have responded with overwhelming support. **How do you account for the different responses at the different sites?**

4. Hayes Holgate and others have argued that the stipulation for public participation in the regulatory process (specifically the NEPA process) opens the door to delays and complications in the implementation of the CSDP. **What is your feeling about this issue?**

5. There is mention in the literature of the potential for a Presidential waiver to remove military activities from the burden of complying with environmental regulations. **Is there such a waiver and what is the possibility it would be used?**

6. STATEMENT: The CSDP is a huge program, technologically very sophisticated, complex, difficult to evaluate and fraught with ambiguities. The CSDP proposes to destroy the U.S. arsenal of 27,000 metric tons of toxic lethal nerve and mustard agent in incinerators constructed specifically for that purpose. This program has never been done before on the proposed scale. Naturally, the program has produced fears on the part of the citizens who live near the proposed destruction sites.

How does the Army evaluate the publics' fears? Are some reality based while others are not? Which ones, in your opinion, are legitimate concerns? Pleasecomment.

7 Some of the publics' fears surround the issue of the continued use of the incinerators. It is my understanding that Public Law 99-145 authorized the dismantling of the incinerators once the weapons munitions were destroyed.

Does the Army have any plans for utilization of the incinerators beyond the destruction of the weapons?

8. Who (or what agency) is responsible for handling public relations with respect to the Chemical Stockpile Disposal Program?

9. I know there are plans to present a workshop for emergency managers throughout the nation this fall. Are there any plans of a similar nature to educate the public with the incineration process? If so, what are they, how and when will they be implemented?

10. MEDIA. In your opinion, has the media been a help or a hindrance to the CSDP? Discuss. Can you give examples?

Thank you so much for your kindness and patience in answering my questions. Are there other people in the Army with whom I could speak in conjunction with this research project?

Would you be willing to give me a letter of introduction or may I say I've spoken with you?

NAMES:

_____

_____

Interview Schedule

MEDIA

1. How and when did you first become acquainted with the nerve gas controversy at LBAD?

2. Have you covered similar stories before?

3. How is this controversy different from or similar to others you have written about?

4. Can you tell me a little about the history of the relations between the community and the depot?

5. You've covered the story for many years, what do you see as the major issue/s?

6. Was the nerve gas incinerator issue selected for you or did you choose it yourself?

7. What is the editorial position of the *Richmond Register* with respect to this issue?

8. Did you cover the scoping meeting at the Clarke-Moore Middle School last April?

   What was your impression of the proceedings?

9. Who/what are your main sources of information regarding the Chemical Stockpile Disposal Program?

10. Do you have a regular contact person in the Army?

11. With the citizens opposing the plan?

12. Does the Army furnish you with press releases about new developments?

13. Have you ever visited the depot?
    Under what circumstances did you visit? Did you have a guided tour Conference?

14. Did you witness the exercise involving their mock terrorist attack?

15. You've written about a number of the major controversies involved in this issue , e.g., the SSEIS issue, the "continued use " issue?

    How has the Army responded to the citizen opposition?

16. Have you had any constraints placed on your writing about this issue?

17. Have you met any of the activists who oppose the incinerator? Pleasedescribe:

18. How would you characterize the two groups?

19. How do you think the whole thing is shaping up?

Date:_____

Q1: Many people who have written about the CSDP comment on the difficulties faced by the Army in carrying out its Congressional mandate to destroy the weapons and at the same time, do it in a manner consistent with the stipulation that this be accomplished with maximum protection of the public in mind.

How have you tried to deal with this question given the fact that many people are wary of the choice of incineration as the method of choice?

Q2: **Thus far, what has been the Army's position on the public opposition to the incineration proposal?**

STATEMENT: A reporter for the New York times said, " In Utah and Alabama, citizens say they are satisfied with how the Army conducted itself and have responded with overwhelming support.

Q3: How do you account for the different responses at the different sites?

Q4: Holgate and others have argued that the stipulation for public participation in the regulatory process(i.e., specifically the NEPA process) implementation of the CSDP program. What is your feeling on this issue?

Q5: There is mention in the literature of the potential for a Presidential waiver to remove military activities from the burden of complying with environmental regulations. Is there such a waiver? If so, do you think such a thing will be used?

STATEMENT: The CSDP is a huge program, technologically very sophisticated, complex, and fraught with ambiguities. The program has produced numerous fears on the part of the public.

Q5: How does the Army evaluate the public's fears? Are some reality-based while others are not? What is your assessment of the public 's perception of the threat?

STATEMENT: Some of the publics' fears surround the issue of the continued use of the incinerators. It is my understanding that Public Law 99-145 authorized the dismantling of the incinerators once the weapons/munitions were destroyed.

Q6: Does the Army have any plans for utilization of the incinerators beyond the destruction of the weapons?

Q7: Who (or what agency) is responsible for handling public relations with respect to the Chemical Stockpile Disposal Program?

Q8: I know there are plans to present a workshop for emergency managers throughout the nation this fall. Are their any similar plans under way for public education that coincide with the implementation phase of the CSDP?

Media

Q9 What is your impression of how the media has handled information regarding the CSDP?

FAVORABLE/UNFAVORABLE?

Questionnaire # 5

Date: _____ Code: __ __ __ __

Questionnaire for Members of
Kentucky Community Review Team

1. How and when did you become a member of Concerned Citizens?

2. In your opinion, what are the major issues from the standpoint of Concerned Citizens?

3. How did the Richmond Study group come about?

4. Can you describe your role in that study group?

5. How was the group structured and what did you all do?

6. Did the Army cooperate with your efforts?

7. In your article, you said," **The Army staff undoubtedly sought to view the team as a means of mitigating public concerns while recognizing that the team's existence could not be allowed to become an** what you meant **by this.** (p. 295).

8. What did the study group conclude/ what were its recommendations to the Army?

9. What did the Army do with the report?

10. If you had it to do over again, would you do anything differently with respect to the study team process?

11. Did working as a member of the research team alter your perceptions of the situation or cause you to rethink your opposition to incineration?

12. In your article you argued that a key factor was the team's early decision to focus on participation in the process (p.295). **Would you comment on this statement?**

13. You implied that scoping meetings were not effective mechanisms for "mitigating public concerns," and that study teams offered more opportunity for real exchange of views. **Do you see publicly-funded study teams as the wave of the future in terms of improving the NEPA process?**

14. What percentage of the community would you guess are opposed to the incineration of the weapons on-site at LBAD?

16 Has EKU taken any position on the issue?

MEDIA:

17 In your opinion, how has the media reported this issue?

18. Has the media been a help or a hindrance to the opposition groups at LBAD?

BIOGRAPHICAL DATA

19. Have you been active in other kinds of protest groups?

20. What percentage of your time do you devote to movement activities?

21. With whom do you most often interact about this issue?

22. Are other members of your family involved with Concerned Citizens?

23 How have you managed to balance the roles of activist/ scholar/ family person?

24. How long have you lived in this community?

25. Do other family members live in this community?

26. Do you own or rent your home?

27. Education: Some HS *(Circle One)*
H.S. Grad
Some college
College grad/ trade school

Graduate or Professional

28. Has this experience radicalized ;you in other areas of your life?

29. Could you suggest anyone else with whom I could talk about this issue? Other members of study group?

COMMENTS:

VITA

Carol Griffith Davies received her A.B. from Boston College in 1975 and her M.Ed., also from Boston College, in 1981. She entered the University of Tennessee, Knoxville in 1987 and received her Ph.D. in sociology in 1995. Areas of interest include Political Sociology, Social Change, Sociology of Religion, Social Movements, and Popular Culture. She has taught at the University of Tennessee in Knoxville, TN and at Duquesne University, Pittsburgh, PA. She worked as a consultant from 1989 to 1993 as part of the Environmental Analysis and Assessment Section in the Energy Division of the Oak Ridge National Laboratory. In addition to teaching and research, she has worked in higher education administration both as a university registrar and as an admissions director. She currently resides in Pittsburgh, Pennsylvania.