BMEd-Tech
University of Tennessee,
MABE Department

May 12, 2022

Dear Dr. McAllister,

Contained within the following report is a summary of the actions of the BMEd-Tech team regarding the design and prototyping of the Medical Sound Simulation Vest (Simu-Vest) which we were tasked to develop. The purpose of this report is to inform you of the details of our final design prototype as it currently stands, including the process through which it was developed and the future work needed to improve the design. A highly detailed description of the final product can be found within the report.

Please let us know your thoughts, feedback, and suggestions based on our design, especially if there are any requirements which you do not believe have been met, or if you have any additional information to provide for us.

Sincerely,
BMEd-Tech Design Team
(Sarah Meeks, McKenzie England, Tyler Morris, Noah Robison)

FINAL DESIGN REPORT FOR THE MEDICAL SOUND SIMU-VEST AND DR. MARCIA MCALLISTER, CLINICAL ASSISTANT PROFESSOR AT THE UNIVERSITY OF TENNESSEE'S COLLEGE OF NURSING

May 12, 2022

BMEd-Tech Design Team:

Sarah Meeks, Chief Executive Officer
Email: smeeks5@vols.utk.edu
Phone: (559) 760-3434

Tyler Morris, Technical Officer
Email: tmorri35@vols.utk.edu
Phone: (901) 258-9854

Noah Robison, Communications and Financial Officer
Email: nrobiso1@vols.utk.edu
Phone: (901) 569-2473

McKenzie England, Medical Officer
Email: menglan8@vols.utk.edu
Phone: (865) 659-5332

Table of Contents

Cover Letter 1
Cover Page 2
Table of Contents 3
List of Figures 3
Executive Summary 4
Background 5
Problem Definition 6
Concept Development 8
Product Description 11
Design Evaluation 15
Estimated Cost of Prototype 15
Recommendations and Future Work 16

List of Figures

Cardiac Auscultation and Palpation Sites 7
Respiratory Auscultation Sites 8
Point Diagrams on Vest 9
Selection Matrix 10
Cross-Sectional View of Vest 11
Side and Top View of Vest 11
Wiring Schematic for Simu-Vest 12

Executive Summary

The Medical Sound Simulation Vest (Simu-Vest) is designed to be a low cost, adjustable simulation vest capable of reproducing various normal and abnormal bodily states that can be worn by a standardized patient during medical training sessions for future health care employees. The needs described by our main stakeholder, Dr. Marcia McAllister of the University of Tennessee's College of Nursing, included that the vest be able to simulate common heart and lung sounds and that alterations in sound production be easily accessible, and that the final design must be cost efficient. The main design alternative considered, and implemented in one prototype, involved the presence of speakers inside the vest at each sensor location. With this design, sound files had to be broken down into discrete points based on individual frames, and the small speakers being used were unable to produce low frequencies needed for many accurate heart and lung simulation sounds. The current and final design includes the use of one external speaker which attaches to the trainee's stethoscope and connects to an audio jack rather than directly to GPIO pins, allowing for sound files to be played as a whole and for both sound quality and accuracy to be increased.

The final design manufactured includes an outer layer of marine vinyl to ensure the vest is sanitizable and all electronic components are protected. Adjustable straps are attached on the top and both sides to provide adjustability in the vest for it to theoretically fit any standardized patient. A pocket which can be accessed through a zipper on the left side of the anterior of the vest holds the Raspberry Pi and battery pack, and allows for easier access to both. This pocket also gives access to the audio jack which connects the detachable speaker designed to fit most standard stethoscopes. In addition to the external speaker, a layer of soundproofing foam inside the vest further ensures the standardized patient's bodily sounds will be blocked from the stethoscope. Embedded in the foam are 31 sensor locations which project 15 alterable states including 1 healthy cardiovascular and respiratory, 7 unhealthy cardiovascular, 5 unhealthy respiratory, and 2 cardiovascular palpation states, all of which can be easily switched using wireless connection and the GUI. The cost of production is estimated at around $600, and the estimated retail price is $2000-$2400.

Background

In the wake of the COVID-19 pandemic, the need for properly trained medical and nursing staff has grown more apparent. In order to provide the most efficient and effective care possible, healthcare professionals must undergo rigorous and detailed instruction. This is most effectively accomplished in medical training programs, where students can be taught the newest and most effective diagnostic and treatment procedures and equipment. The use of simulation devices in medical training can equip healthcare workers with the proper training on a wide variety of symptoms and diseases without having to wait for a patient to appear or incurring harm onto the patient. However, in many small or low-income training programs, access to high-quality equipment, especially training equipment such as simulation devices, can be hampered by low budgets, as the current models of equipment can cost tens of thousands of dollars for a single unit. The need for affordable yet effective training equipment provides a large market for research and product development. Our goal is to develop a low-cost product that can adequately simulate basic cardiac, pulmonary, and abdominal normal and diseased states for medical students to practice diagnosing using fundamental auscultatory and palpatory techniques.

Development of a product that can meet these needs will have an impact on several groups of people. Our main client is Dr. Marcia McAllister of the University of Tennessee's College of Nursing; Dr. McAllister will function as our primary stakeholder, providing the insight of a trained clinical nursing professional. Other clients include instructors and professors in a range of nursing and healthcare education institutions, as well as their students, who will be the target audience for the implementation of our product. We expect that a successfully designed and implemented product would result in highly trained medical personnel ready to assist in the diagnosis and treatment of patients presenting a wide variety of common symptoms within the pleural and abdominal cavities. We believe that our product is an inexpensive way for lower-budget facilities to access a high-quality simulation device without having to purchase extra equipment, resulting in increased opportunities for students within these training programs. We believe that a reusable, standardized product will allow for high social benefits with little other impact.

Several products have been developed previously by companies with goals similar to ours. These products include Avkin's *Avtone*, Cardionics' *SimShirt*, the Rector Clinical Skills and

Simulation Center's *Simulation Vest*, and the *Educational Medical Mannequin* (US5314339A). These products all simulate various disease states in a manner similar to our proposed product; however, these various products have unique strengths and weaknesses that we can use in developing our product. The Avtone, SimShirt, and Simulation Vest all have conformable sizes that can operate on the standardized patient, with various disease state sounds being played. Some of these products even come with a tactile surface that mirrors the physiology of skin. The Educational Medical Mannequin allows for various procedural tests, such as tube insertion, while representing the patient's state for dozens of diseased states. These products also have a number of drawbacks: first, only the Avtone is shown to be bluetooth connectable; second, none of the existing products offers both auscultation and palpation training on the same device; and third, these products are all rather costly.

Problem Definition

The overall goal conveyed is to construct a medical simulation vest that completely covers both the anterior and posterior areas of the torso of a standardized individual for use in a clinical teaching environment. The vest is to be created primarily for Dr. Marcia McAllister, clinical assistant professor at the University of Tennessee College of Nursing, with a secondary client base of the UTK College of Nursing and eventually a broader audience of nursing or healthcare students in various training programs. Specifically, the key business objective for this design is to develop a relatively cost efficient medical simulation vest simulating anatomically correct normal and abnormal cardiac and respiratory sounds of the anterior and posterior torso for distribution and use in low-budget health care instruction programs, with a required retail value of between $2000-$2500, which is much lower than current equipment costs.

Design constraints for the vest include various physical and functional requirements for use, as well as the expected functionality of the final product. Physical needs for the design require that the product must be able to be worn comfortably by a standardized patient with anatomically accurate positioning of points to a person of average height (standardized patient with height of 67 inches). The device must not restrict basic motion for the wearer. The vest must have the ability to connect to mainstream electronic and medical technology in order to limit the equipment costs associated with purchasing the device. The design must also be sanitizable with

rubbing alcohol without the outer material deteriorating. The device must be available in multiple skin tones or be racial neutral in order to maintain an inclusive environment.

Functional requirements include the ability to respond to auscultation and palpation with a physiologically accurate sound and movement/vibration. The auscultation and palpation sites will be anatomically equivalent with that of an individual of height of 5’7’’ or 67 inches. The vest must respond to user input in order to effectively serve as a medical training simulation device. The required output can be divided into two categories: cardiac and respiratory. A diagram of the cardiac requirements and their positions can be seen in **Fig. 1**. Normal cardiac auscultation requirements include the S1 and S2 sounds. Abnormal cardiac sounds will include various types of murmurs; aortic, mitral, and pulmonic stenosis; aortic, mitral, and tricuspid regurgitation; point of maximal impulse; and mitral valve prolapse. Cardiac palpation requirements involve abnormal representation of the following states: abdominal aortic aneurysm at the abdominal aorta as well as the point of maximal impulse.

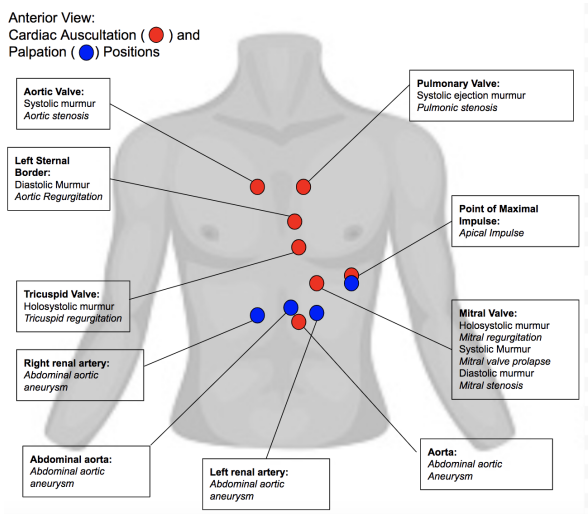

Figure 1: Cardiac auscultation and palpation sites and conditions required by the Simu-Vest.

The respiratory functional requirements are auscultatory only and involve both healthy and unhealthy breath sounds, as can be seen in **Fig. 2**. Normal states include healthy vesicular, bronchovesicular, and bronchial breath sounds. Abnormal sounds include the unhealthy versions of these three types, exhibited as crackles or wales, wheezes, stridor, rhonchi, and pleural rub.

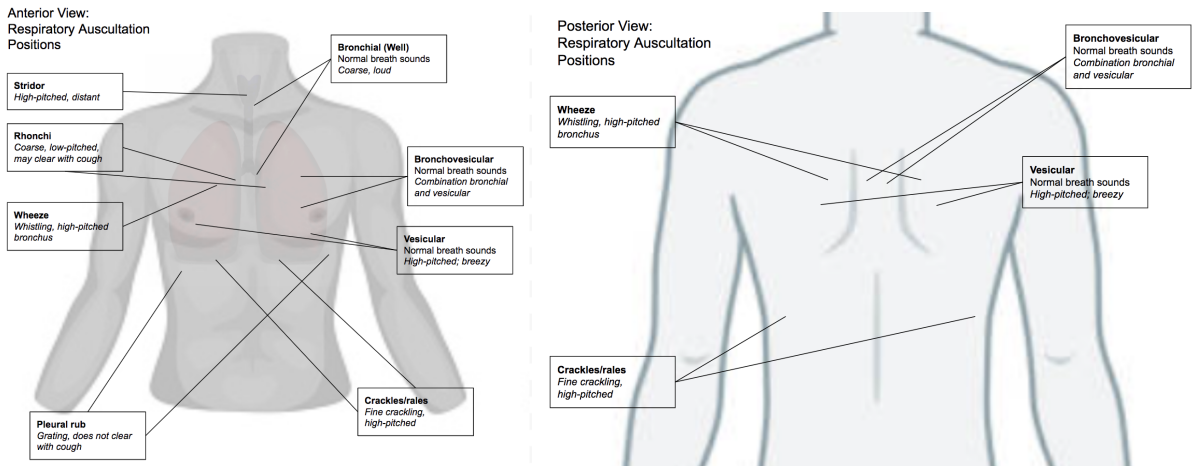

Figure 2: Respiratory auscultation sites and states required by the Simu-Vest.

Concept Development

Given the requirements and desires laid out by our stakeholder, the team had the goal to create a device that was a single product so that it was easy to use, store, and transport. A single self-containing vest is also a method to make the product cost efficient during the manufacturing and packaging processes. The design team proposed to create a vest that would cover all areas that are used during the auscultation and palpation process to determine if the cardiovascular and respiratory systems are functioning properly in the body. The vest would contain all of the electronic components and be fully functional as one unit, allowing for movement of the standardized patient and ease of setup in the testing environment. In order for the vest to function as such, there would need to be a system within the vest that controlled the inputs and associated outputs of the vest. The design team theorized that pressure would be an appropriate input for the system to register, as a stethoscope is pressed against a patient in order to hear their organs in the clinical setting. Other options were considered, such as locational input, a visual scanning system, or no input. A microcontroller would need to be used to register the pressure input onto the vest and trigger the corresponding output. The technical officer of the team considered both an Arduino and a Raspberry Pi; the Arduino would be more familiar when programming. However, the Raspberry Pi would have more capability in running the complex system. The microcontroller would also need to be connected to power in order to function, which could be satisfied by a wall outlet, a connection to another device such as a laptop, or a battery pack. The Raspberry Pi would output various sounds or motions depending on the pressure location that

was depressed and the disease state that had been selected. Locations for the speakers that would play the physiological sounds the Simu-Vest would be simulating were considered to determine what would be the best for quality of experience and accuracy to the real body. Possibilities considered included locating the speakers at the auscultation points or organ sites or simply using an external device. The vest also possesses palpation points where a motor would simulate the feeling of a pulse, which could be done with either a servo or vibration motor connected to the microcontroller. The whole system would need to be controlled by a device that could switch the type of output depending on the desired disease state. This could be done by an attached controller with some input to the Raspberry Pi or an accompanied user interface that could select the disease state and send the information to the Raspberry Pi. Either choice would have to be simplistic so that nursing professors could use it with ease.

One concern of using a vest on a standardized patient would be artifacts coming from the patient's body disrupting the artificial sounds being projected. One solution to this potential problem would be to create a thick enough vest that the sounds of the patient would be muffled. Soundproof foam that is used in recording studios could also be used to muffle these sounds and then stuffing could be added to the interior sides of the vest to provide more comfort for the patient. Placing the speaker outside the vest using an external extension could also prove as a solution. The vest would need to be made of a sanitizable and waterproof fabric. This fabric would also limit the vest's conformity to multiple body sizes. With this limitation, the vest would either need to come in different sizes or be adjustable so that it could fit more body styles.

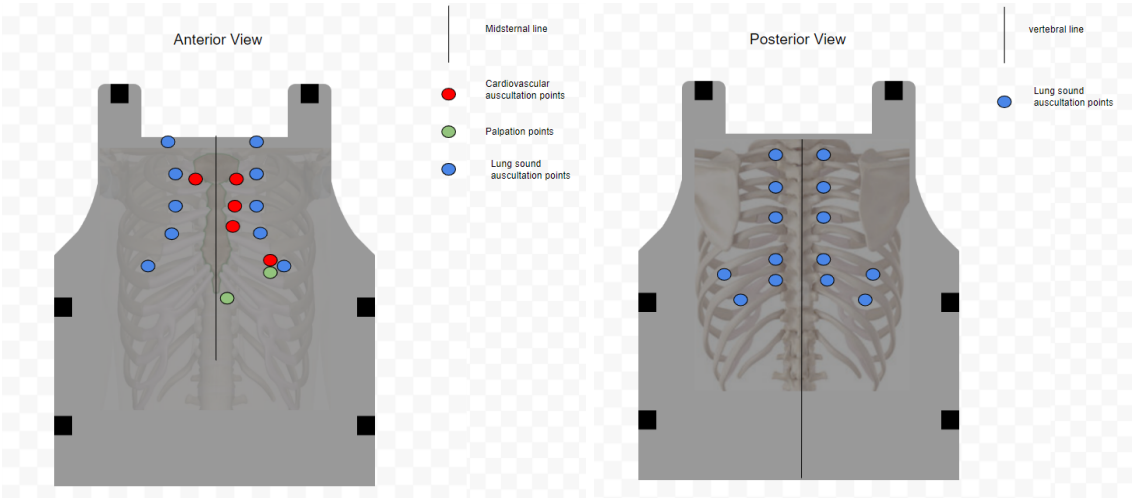

Figure 3: The locations of auscultation and palpation points determined by the design team for the anterior and posterior sides of the vest.

The auscultation points of the vest were designed as detailed in **Figure 3** further along in the design process, which gave the design team more insight into what aspects would work for the points located in such a manner. Individual pressure sensors were decided to be more useful than pressure strips due to the distribution of the points on the anterior side of the vest. The proximity of the auscultation points also limited the size of the speakers that could be used, which would have a negative effect on the quality of the heart and lung sounds. The number of points that were intended to be used made the design team choose the Raspberry Pi as it is the more powerful microcontroller along with a battery pack to power it while providing the most mobility.

	Sound Production Location			Sound Activation				Vest Design			Vest Compositon		Vest Control			Movement Simulation		Power	
	Auscultation Sites	Anatomic relevant sites	Addition external device	Pressure Sensor Strips	Individual pressure sensors	Programmed activation with external device	No activation (always playing)	Flexible material	Multiple sizes	Adjustable with straps on sides	Thick fabric layers	Sound dampening foam	External device to accompany vest	Connected controller	Wireless application	Servo motors	Vibration motors	Battery	Outlet
Reusability	N/A	N/A	N/A	5	5	5	4	3	5	5	5	5	4	4	5	5	5	4	5
Sterilization	N/A	N/A	N/A	N/A	N/A	N/A	N/A	2	5	5	N/A	N/A	4	2	5	N/A	N/A	5	3
Cost	3	4	1	2	3	1	5	3	2	4	3	4	1	4	5	4	5	4	3
Body Style Inclusion	3	5	3	N/A	N/A	N/A	N/A	3	5	4	N/A	N/A	N/A	N/A	N/A	N/A	N/A	N/A	N/A
Ease of Use	5	2	2	4	5	4	5	2	4	4	N/A	N/A	3	5	4	5	5	4	3
Reduction of Waste	3	4	2	3	2	1	5	5	2	5	2	3	1	4	5	3	3	3	4
Accuracy to Human Body	3	4	3	3	4	4	3	N/A	N/A	N/A	N/A	N/A	N/A	N/A	N/A	3	4	N/A	N/A
Simplicity	2	1	1	2	5	1	5	4	2	3	4	5	1	5	4	3	4	5	4
Effectiveness	5	2	4	4	5	5	4	4	3	4	2	4	5	4	5	4	4	4	4
Vest Comfort	4	2	4	2	4	5	4	3	5	4	3	4	5	4	5	4	5	3	5
Professionalism	N/A	N/A	N/A	5	5	5	0	N/A	N/A	N/A	3	5	5	4	5	3	4	5	4
Total	28	24	20	30	38	31	35	29	33	38	22	30	29	36	43	34	39	37	35

Figure 4: Selection matrix used to determine the most fit concepts for the Simu-Vest.

As can be seen in **Figure 4**, the design team used a selection matrix to select the final design features. Auscultation sites were chosen as the preferred method of sound production location as those are the locations where recordings would be more commonly taken and therefore more accurate to the user's experience with the actual body. This selection was modified in the later stages of the prototyping process as it was found that the Raspberry Pi was limited in its sound quality through the GPIO pins. Instead, a singular speaker that was connected to the vest through an auxiliary cord was created to attach to an user's stethoscope. The combined stethoscope and speaker depressed an auscultation location, producing the sound through the speaker, which is plugged into the auxiliary port of the Raspberry Pi. The sounds were selected to be activated by individual pressure sensors, which would increase the amount of wiring needed for the device but would simplify the coding needed to differentiate the different auscultation points with pressure strips. The vest was chosen to be adjustable on the top and sides in order to allow for different body styles which provided more inclusivity for the prototype. Soundproof foam was found to be more useful to make up the interior of the vest as it allowed for the vibration motors and pressure sensors to be firmly attached.

Product Description

Every component of the Simu-Vest was chosen to fulfill a specific requirement from the stakeholder while also contributing to other functions and necessities of the design. Furthermore, each component was completed in tandem with the others, leading to a complex integration of components that allowed the device to meet the set requirements. From the integration of multiple fabric layers to provide structural support and be sanitizable, to the electronic components that ran the simulations accurately and fully, each part of the Simu-Vest met the requirements set before the team one way or another.

The material components that comprise the Simu-Vest each provided a specific functionality that helped keep the vest structurally sound while also providing the necessary attributes required of the device. These layers can be shown by **Figure 5** below.

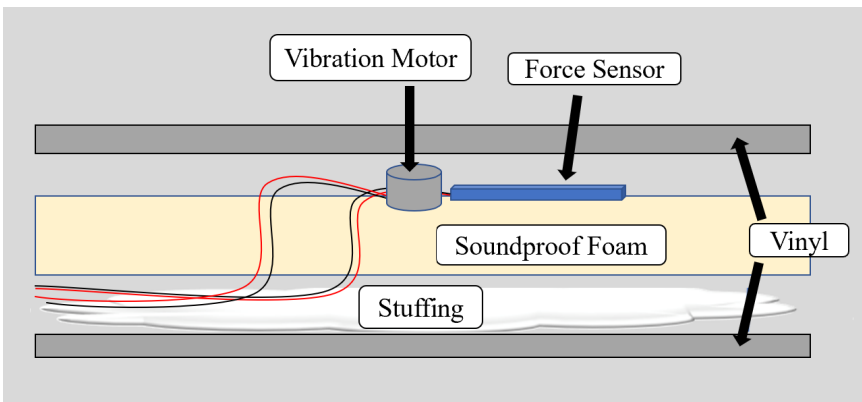

Figure 5: Layers that comprise the Simu-Vest

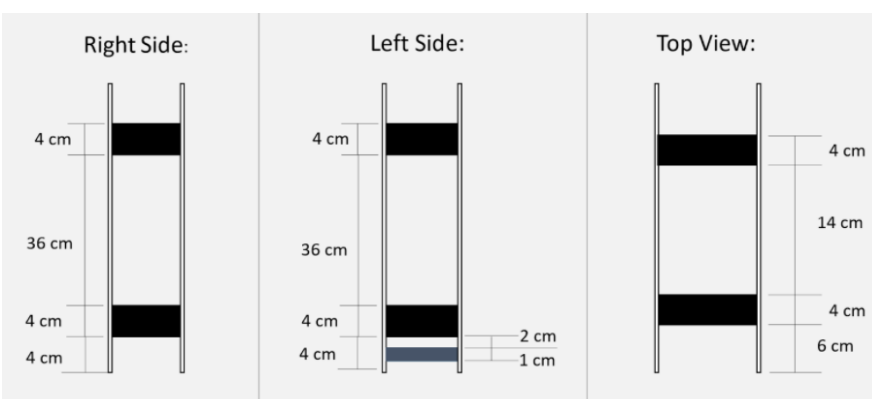

Figure 6: A side view of the Simu-Vest showing the adjustable straps.

As shown in **Figure 5**, the outer layers of the vest are composed of gray marine vinyl. This material was initially chosen for its durability and smooth surface, which allowed it to be reused repeatedly while also being santizable with standard alcohol without sustaining any

damage. The vinyl was also stiff and thick enough to provide an extra layer of protection and stability for the inner electronic components while still being thin and flexible enough to conform to the body of any standardized patient. The gray color was picked in order to keep the vest racially neutral. Below the vinyl layer, a thicker layer of soundproof foam was used to fulfill the stakeholder's requirement that the bodily sounds of the standardized patient be blocked out. The foam was also used to provide stability to the vest, both stabilizing the electronics by weaving the wires through it and being the structural frame for the vest. The last layer was a layer of stuffing between the foam/wires and the inner vinyl layer, which was put in to provide comfort to the wearer. The last component of the material vest, which is shown in **Figure 6**, were the straps that connected the posterior and anterior layers. Each of the straps were fully adjustable, which allowed the vest to fit any standardized patient. The adjustability of the straps also allowed the vest to be moved so that the points were accurately placed, which was another stakeholder requirement. A sewing machine was used to sew the marine vinyl together and then attach the straps.

The electronics that comprised the inner layer of the vest were each chosen for specific reasons as well. **Figure 7** below shows how these electronics were configured in the vest, showing both the wiring and the placement of each component.

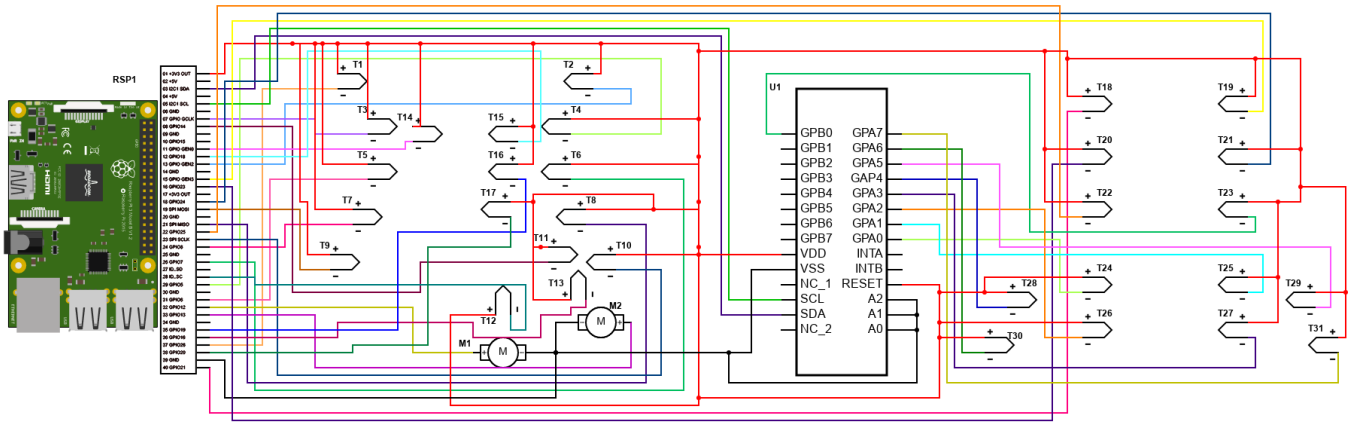

Figure 7: A full wiring diagram of the Simu-Vest, showing the Raspberry Pi (left), force sensors (labeled with Ts), motors (labeled with Ms) and the MCP23017 GPIO extension chip (mid-right)

A Raspberry Pi Model 4B was chosen because of its high processing power, which was required to run all of the points, and its user-friendly interface, which made it easily

programmable. All of the electronics were connected to a singular Raspberry Pi that was powered by a standard battery pack. Any battery pack with a USB connection can be used, although the vest will come with a standard rechargeable battery pack with a battery life of over 6 hours of continuous use within the vest. The force sensors that were used were chosen for their size and sensitivity. They were small enough to encompass the specific point outlined by the stakeholder without encroaching on any others. Additionally, they were sensitive enough to pick up any touch that a student might use to find the point without being too sensitive and going off just by the weight of the vest itself. These sensors were each grounded to a separate GPIO pin or a pin on the MCP23017 chip and powered by the 3.3V supply of the microcontroller, as shown in **Figure 7**,which caused them to complete the circuit when touched and activate the Python code, which is described later in this section. The other small electronic components used in the vest were two vibration motors, which were chosen due to their ability to mimic virtually any frequency with a wide range of power outputs. As shown in **Figure 7,** these motors were wired to the PWM pins on the Raspberry Pi (GPIOs 12 and 13) in order to control their frequency while also being grounded. These motors were programmed to pulse just like a standard heartbeat, which was confirmed by the user testing performed. The last interior component used was the MCP23017 chip, which was wired to the SDA and SCL pins on the microcontroller, since it works by using an I2C connection. This chip was used to add the nine additional points needed to have all 31 points required by the stakeholder since the Raspberry Pi only has 26 GPIO pins (2 of which were used by the chip itself once added). This chip was also properly wired to the ground and 3.3V power pins, as shown in **Figure 7.** An external speaker is attached to the vest and can be attached to any standard stethoscope to project the simulated noises. This was chosen because of its high quality sound output, which makes any simulated disease state easily recognizable by the student. It also allows the student to use their own stethoscope to more accurately simulate a clinical scenario. This speaker is plugged into the audio jack on the microcontroller, which allows any necessary sound to be played depending on the point pressed and the disease state simulated. Overall, each electronic component fulfilled the requirements set by the stakeholder, whether it be stimulating the desired bodily sound or motion or providing the necessary amount of points and processing power needed to accurately simulate a clinical environment.

All of the electronic components were programmed and controlled through a series of Python files that were uploaded to, controlled, and edited with Visual Studio Code (VSC). Python was chosen due to its vast amounts of libraries that can be used to provide a wide variety of functionality to any program, as well as its easy-to-use/learn language. Using VSC, each GPIO pin was mapped to the force sensor or motor it was connected to. GPIOs 2 and 3, however, were both programmed to interface with the MCP23017 chip through an I2C connection, which provided a stable and reliable interface that allowed for the addition of up to 16 more GPIO options (although only 9 were used). For each simulation point, the code was designed to wait for the corresponding force sensor to detect an input, after which either the corresponding sound was played through the external speaker or the internal vibration motor began to simulate a heartbeat. The code was also designed in a way that prevented any infinite looping by using a delay (set to 4 seconds for demonstration purposes, but easily adjustable), after which the sensor was reread and, if on, the loop was restarted or, if off, the speaker or motor was immediately shut off. During this delay, no other force sensor could be activated to further prevent infinite looping. Furthermore, for each disease state, a separate Python file was created. Each of these files contained the same points, electronic programming and set up, and healthy sound files. They differed depending on the disease state which they represented, in which they were programmed to play a different sound at a different set of points depending on the state. For example, the stridor disease state played the given sound file at each of the lung points, whereas the mitral stenosis state only played the disease sound at point 11, which is where the illness can be heard on an actual patient. This differentiation of each disease state allows the Simu-Vest to fulfill the stakeholder requirement of stimulating all 15 different disease states (one of which is a healthy person). To control these different files, a simple user interface (UI) was created using Python. This file, when run, will ask the user what disease state they would like to stimulate. The user can then use the terminal to enter the desired state, after which the code will then begin running the specified state and continue to do so until the user exits out of it. While running, the terminal will display what points are being pressed so that any instructor can tell if the student is pressing a point and if it is the correct one. Altogether, the Python code fulfills the remaining stakeholder requirements, which includes the ability to simulate multiple different disease states, be very user friendly, and be easily adjustable to any user requirements.

Design Evaluation

The primary requirement of the Simu-Vest was to allow students to be able to hear the sounds of various disease states emitted from the torso in anatomically correct positions in order for them to be able to learn how to diagnose patients. This product should be developed to be lower cost than currently-available products. The final working prototype successfully allowed for this function as the depression of a location on the vest triggered the sound of a disease state that was previously selected in the terminal user interface. The user interface is simple: the user types in the desired disease state, presses enter, and then it is transmitted to the Raspberry Pi, which alters the outputs produced by the speaker and motors at individual points. The depression triggered an audible sound to the connected speaker that attached to the user's personal stethoscope. All disease states were able to be produced through the speaker, which was high enough quality that more slight differences could be detected. The sound will continue to play as long as the pressure sensor is depressed, which is accurate to the human body, and will stop playing quickly after the stethoscope attachment is lifted from the vest. The palpation points were also fully functional, and when the location was depressed, the vibration motors quickly simulated a pulse that ended once the hand was lifted from the vest. The speaker attached to the stethoscope allowed for the user to only hear the heart and lung sounds of the vest, but outside artifacts were an issue during testing. As the stethoscope is attached to the motor with elastic straps, the stethoscope moves against the speaker which causes scratching noises and eclipses the sounds coming from the vest. The vest, however. did not complete all tests successfully. The MCP23017 chip was not able to work in tandem with the points on the vest that were controlled only by the Raspberry Pi, as the microcontroller did not have enough processing power to be able to do both. This resulted in nine posterior points not functioning during the testing phase of the process.The vest was successful in its usability in the clinical setting. The vest was constructed with adjustable straps on the top and sides of the vest so they could be extended as necessary. The vest is limited in its variability while still being comfortable when it comes to smaller standardized patients as it is the size of the torso of a 5'7" male. The vest can be sanitized fully as the marine vinyl is liquid-proof and the waterproof zipper on the side of the vest allows for all semi-external parts to be put inside before being wiped down. The torso of the vest was wiped down multiple times with alcohol prep pads and showed no sign of wear. The speaker of the vest would have to be more carefully sanitized than the vest as it has open holes to

its interior, but an alcohol prep pad would be suitable to clean this component. The vest was successfully running for over three hours continuously with one battery pack, which means that the vest could conservatively be used for six hours in the testing environment. The prototype also succeeded in its goal to be more affordable than other products that are on the current market.

Estimated Cost of Prototype:

The cost of materials was as follows:

Marine Vinyl (48x55 in): $21.00

Raspberry Pi Kit: $155

Soundproof Foam: $6

Buckles and Straps: $6.50

Wires: $16

Vibration Motors: $9

Port Expander: $10

Waterproof Zipper: $2.17

Pressure sensors: $177.44

Pillow Speaker: $4.99

Battery Packs: $21.99

Breadboards: $10

Superglue: $9.70

Elastic: $3.00

which totals to $452.79 for the parts of the prototype. It was estimated that about $150 dollars in labor would have to be spent in order to manufacture the prototype, which would bring the total cost to around $600. Given a standard retail value of four times the cost of production, the final cost of the Simu-Vest design would be between $2000-$2400, which is significantly lower than the current products available and falls within our target range.

Recommendations and Future Work

The Simu-Vest as developed by BMEd-Tech offers several advantages over currently available auscultation simulation devices. It offers a range of disease states corresponding to multiple organs, and has the potential for increasing that number to an even greater amount through the addition of new sound files to the code and new pressure sensors to the vest. It is

conformable to the standardized patient, which enables the vest to be worn comfortably by people with different types and heights and allows the training process to be conducted in a more realistic, clinical manner. The Simu-Vest also includes palpation points with the auscultation points, which is a new innovation. The pressure sensors allow for the Simu-Vest to act as a training platform for identifying location points anatomically, as output actions are only triggered when the corresponding pressure sensor is depressed. This forces the trainee to find the locations individually and precisely. The device is well suited for sound and feeling identification, as it plays highly differentiable sounds and palpation pulses. The Simu-Vest utilizes commonly available technology to use it, including the use of a personal stethoscope to allow students to train in a more clinically-accurate setting. Finally, the Simu-Vest costs significantly less than currently-available models, making it ideal for lower-budget programs.

Future work to further develop the Simu-Vest largely involves making the device more physiologically accurate. The current device is uniform in appearance, lacking the necessary landmarks for students to use to discover the locations of the pressure sensors. A more accurate model would incorporate an eternal matter that either comes in multiple skin tones or is racially neutral while also offering a more realistic tactile feel and sculpting to make the vest look more accurately proportioned and landmarked. A more accurate device would also incorporate some sort of internal bone structure, which plays a key role in auscultatory and palpatory techniques. Another update would be purchasing a Raspberry Pi with greater than 16 GB of RAM in order to allow the MCP23017 chip running the anterior panel of the Simu-Vest to function. The Simu-Vest's physical design would have to be adjusted some to better distribute the weight of the device and alter the tension on the pressure sensors. The attachment to the stethoscope needs to be created with a better material to prevent the speaker from slipping on it. Further, a different speaker should be chosen with a smaller surface that can more accurately depress the points desired during the training. Finally, Simu-Vests of various sizes and structures should be produced to create more anatomically correct scenarios with a wider population of standardized patients, including patients outside the 5'5"-5'9" range and women.