November 16, 1973

To the Graduate Council:

I am submitting herewith a thesis written by Doris Ellen Phillips entitled "Food Preservation Practices Used by Selected Homemakers in Hancock County, Tennessee." I recommend that it be accepted for twelve quarter hours of credit in partial fulfillment of the requirements for the degree of Master of Science, with a major in Food Science.

Mary A. Bass
Major Professor

We have read this thesis and recommend its acceptance:

Grayce E. Goertz

Roy E Beauchene

Accepted for the Council:

Hilton A. Smith
Vice Chancellor for
Graduate Studies and Research

FOOD PRESERVATION PRACTICES USED BY SELECTED HOMEMAKERS IN HANCOCK COUNTY, TENNESSEE

A Thesis

Presented to

the Graduate Council of

The University of Tennessee

In Partial Fulfillment

of the Requirements for the Degree

Master of Science

---

by

Doris Ellen Phillips

December 1973

ACKNOWLEDGMENTS

Obviously this thesis could not have been written without the aid of many sincere and dedicated people. Deep gratitude is given to Dr. M. Ann Bass for allowing and guiding the development of a philosophy regarding work which needs to be done in the sociocultural foods area. Appreciation is extended to Dr. Grayce Goertz and Dr. Roy Beauchene for their suggestions during the writing of the thesis. Appreciation also is expressed to the staff of the Hancock County Extension Office for their assistance in furnishing necessary information used in the study. Ms. Katheryn Kolasa, a fellow student, helped in the establishment of contacts in Hancock County, and her assistance and cooperation throughout the study is highly valued. A very special thank you is extended to all of the friendly people in Hancock County, without whose openness and cooperation, this study would have been impossible.

ABSTRACT

Food preservation practices of Home Demonstration Club (HDC) and Expanded Foods and Nutrition Education Program (EFNEP) homemakers and environmental factors possibly influencing these practices were studied. An interview schedule was used.

As a combined sample, 96% of the HDC and EFNEP homemakers participated in some form of food preservation. The percentages of homemakers using the various methods of food preservation differed with over 50% canning, pickling, making jelly, and freezing.

Educational level, social participation score, and income were all higher for the HDC homemakers than the EFNEP women ($P < 0.01$). Age of the homemaker and the number in the family were similar for the 2 groups.

The proportion of homemakers participating in the various forms of food preservation was different for freezing and curing only. The amount of food preserved varied both within and between the groups. Preserving methods of the HDC and EFNEP homemakers were similar.

Statements of pride by the homemakers expressed their perception of adding to the food supply for the family and/or of making food products which were attractive and flavorful.

TABLE OF CONTENTS

CHAPTER		PAGE
I.	INTRODUCTION	1
II.	REVIEW OF LITERATURE	4
	Environmental Factors	4
	Food Preservation	7
	Safety	7
	Food supply	8
	Preservation methods	8
III.	PROCEDURES	9
	Sample	9
	Interview Schedule and Methods	10
	Development of interview schedule	10
	Implementation of interview schedule	11
	Analysis of Data	11
	Combined samples	12
	Difference between the groups	12
	Group difference in preservation methods	13
	Amount of food preserved	13
	Food preservation methods used	13
	Evaluation of pride	13
IV.	RESULTS AND DISCUSSION	14
	Combined Sample Participation	14

CHAPTER PAGE

Group Comparison of Environmental Factors 17
Educational level 17
Social participation scores 19
Annual family income 19
Age of homemaker and number in the family 19
Work and residence 20
Other factors 20
Differences in Groups in Relation to Preservation Methods 20
Freezing and curing 20
Other preservation methods 22
Amount of Food Preserved 22
Canning 22
Pickling 22
Jelly making 27
Freezing 27
Curing, drying, and burying 27
Description of Procedures Used in Food Preservation . . . 28
Canning 28
Pickling 29
Jelly, jam, preserves, and fruit butter 29
Freezing 29
Curing 30

CHAPTER PAGE

Drying 30

Burying 31

Pride in Food Preservation 31

Food quantity 32

Food quality 32

Implications of the Study 33

Values and health 33

Transmission of food information 34

Availability of foods 34

V. SUMMARY 36

LIST OF REFERENCES 38

APPENDIXES 43

Appendix A 44

Appendix B 55

Appendix C 59

VITA 63

LIST OF TABLES

TABLE		PAGE
1.	Means and F-Values of Selected Environmental Factors for HDC and EFNEP Homemakers	18
2.	Profile of Homemakers	55
3.	Observations and Quotations Demonstrating the Homemakers' Pride in the Quantity of Foods Preserved	59
4.	Observations and Quotations Demonstrating the Homemakers' Pride in the Quality of Foods Preserved	61
5.	Observations and Quotations Demonstrating the Homemakers' Pride in Teaching Her Children Preservation Skills	62

LIST OF FIGURES

FIGURE		PAGE
1.	The Food Preservation Methods and the Foods Most Commonly Preserved by Percentage of Homemakers	16
2.	Percentage of Home Demonstration Club and Expanded Foods and Nutrition Education Program Homemakers Preserving Foods by the Various Methods	21
3.	Homemakers and the Amount of Foods They Canned	23
4.	Homemakers and the Amount of Foods They Pickled	24
5.	Homemakers and the Amount of Jelly, Jam, Preserves, and Fruit Butter They Preserve	25
6.	Homemakers and the Amount of Foods They Freeze	26

CHAPTER I

INTRODUCTION

Throughout time man has preserved surplus foods to be used at a time when food would otherwise be scarce. Because food preservation practices influence the family's economy and the homemaker's sense of self-worth and creativity, early methods have been retained, modified, and refined.

Science has continually contributed to the development of food preservation, to increase the nutrient retention, and to produce safer foods with a longer shelf life. However, many American families do not know the recommended procedures and/or can not afford the necessary equipment (Gifft et al., 1972). Governmental and private institutions recommend only currently acceptable preservation methods in their publications and do not give instructions for early procedures. Homemakers using obsolete equipment and/or methods often rely on their memory or instructions by an older homemaker for information. Transmission of knowledge in this way is sometimes misunderstood or inaccurate.

Food preservation is one aspect of food behavior. Therefore, for studies of foodways, it is important to know the methods of food preservation used and how these practices are related to the foods eaten and to the individual's participation in the preservation. There is not a distinct line between food preparation and preservation (National Research Council, 1945). Although home food preservation is declining

in the United States (United States Department of Agriculture, 1965a), home produced food is a major source of food supply for many families.

Food choices determining preservation practices may be influenced by such life-style indicators as age, family composition, employment status, educational level, and social participation (Schorr et al., 1972). Hancock County, with 1,768 families (University of Tennessee, 1971a), has a median family income of $1,442 which is the second lowest in the state (University of Tennessee, 1971b). Sneedville, the county seat and largest village, is a rural community with a population of 874 (United States Department of Census, 1970). The closest cities and town are Morristown, Rogersville, and Tazewell which are 32 miles, 24 miles, and 28 miles, respectively, from Sneedville. To reach these, one must travel over one or two ridges and/or on winding roads. There are 10 paved roads in the county with the others being gravel, dirt, or creek beds. Geographically, the county is relatively isolated and thus has been bypassed by the social and economic developments outside the region (Photiadis, 1970). These and other factors may influence the variety and quantity of foods available and the methods of preservation used.

Various books and articles have reported some of the "Old-timey" food preservation methods of the rural mountain people (Anonymous, 1972a; Crabb, 1966; and Douglas, 1962). These accounts were of individual practices without reference to the prevalence of the methods within the community. The variety of food preserved is dependent upon its availability, but there is little indication of the amount of foods preserved by the different methods.

The purpose of this study is to investigate selected environmental factors of HDC and EFNEP homemakers in Hancock County, Tennessee, and to relate them to the food preservation practices of each group. Selected environmental factors were studied in order to find differences between the HDC and EFNEP homemakers. The research also was used to describe the food preservation practices in relation to type of foods, amounts, and methods currently used by the HDC and EFNEP homemakers.

CHAPTER II

REVIEW OF LITERATURE

Environmental Factors

Social heritage has disciplined rural mountain people to live with dignity on a lower income than most Americans today can conceive as possible (Weatherford and Brewer, 1962). To accomplish this, the people must make use of all available resources. The people are not homogeneous, but the austerity of the pioneer mountain life has assisted in the development of the unmistakable ruggedness, independence, and self-reliance of today's mountain people.

The mother of a family is the gatekeeper for the available foods to her family (Lewin, 1943). She may cater to certain members of the family in order to eliminate conflict and retain good humor (Cussler and DeGive, 1952). Food habits resulting from repeated experiences with food begin in the child (Hill, 1969). Sanjur and Scoma (1971) found that a food which a mother dislikes or with which she is unfamiliar, is also unfamiliar to her children. The regional origin of the mother is the strongest factor for prediction of the family's food habits. As the educational level of the person responsible for procurring and preparing food increases, more adequate diets result (United States Department of Health, Education, and Welfare, 1972; and Eppright et al., 1970).

People's perception and behavior is the result of the socialization process which begins at birth and is continually influenced by social

groups and mass media (Abell, 1969). Popular women's magazines frequently contain recipes and directions for preserving foods, encouraging the homemaker to use these for family meals, food gifts for Christmas, shut-ins, a housewarming, or an upcoming bazaar (Anonymous, 1972b).

Socialization also is taught by the subtle cultural cues which encourage a person to accept his role as a part of the community in which he functions (Lee, 1959). Work as participation in a social structure can be meaningful, although it may have nothing to do with a sense of self achievement or virtue of an accomplished duty. There may be no personal justification for the work, yet it provides a source of satisfaction because one is participating in interdependence with other members of society. In this way, a homemaker is working in a social medium as a social being, not just as an individual fulfilling a task.

Foodways may be transmitted by informal interaction with others. The individual's food habits reflect the foodways of the group with which he desires association (Cussler and DeGive, 1952). The extent to which his food habits correspond to the foodways of a particular group depends upon his extent of interaction with others in that group. Adjustments to change are accepted by women who are members of cohesive cliques (Photiadis, 1970). These serve as a buffer to alleviate anxieties produced by possible change.

The United States Department of Agriculture, through the Extension Service, has recognized that personal interaction is important for producing behavioral change. The Home Demonstration Club system was devised to improve homemaking practices through educational

demonstrations for many homemakers at one time (Heywood, 1966). It also offered opportunities for socializing which were rare in the lives of most farm women in the early 20th Century. Home Demonstration Clubs continue to provide information to assist homemakers in keeping abreast of new research in developing their management abilities and to help them become intelligent consumers.

The Expanded Foods and Nutrition Education Program was established in 1968, when the United States Department of Agriculture allotted $10 million in special funds to the Cooperative Extension Service for the hiring and training of paraprofessionals to help improve the diets of low-income families (Spindler et al., 1969). These paraprofessionals are trained to teach fundamental nutrition, food buying, and food preparation (Anonymous, 1971). The aide's work usually is done within the home of the individual homemaker to give personal attention for meeting her specific needs (Tennessee Extension Service, 1972a). Personalized and informal experiences which utilize the resources of the family are essential if the homemakers who are geographically isolated and who are socially, economically, and educationally deprived are to raise their level of living (Oliver, 1967).

A homemaker's food preservation methods may change with environmental conditions. Jerome (1967) found in her study of Southern-born Negroes residing in a Northern metropolis that home food preservation differed substantially from former practices in the South. Many hundred quarts of fruits, vegetables, and meat were canned when the people lived in the South. Beans, peas, and some fruits were dried; and meat was salted and

smoked. The accessibility of freezers and the lack of fluctuation in the food supply in the North resulted in a reduced amount of preservation. However, the assumption that all poor people in rural areas are able to live off the land has been questioned (Anonymous, 1968). The people often do not possess the skills or stamina to provide food by gardening, hunting, or fishing.

Food Preservation

Safety. The homemaker is the judge of whether or not the foods have spoiled (Nelson, 1944). During World War II, food products canned by Iowa homemakers which deteriorated in greatest quantity during storage, in order of spoilage, were corn, tomatoes, fruits (all kinds), peas, and beans. Some of these were processed in a pressure canner. Spoilage, which was less than 2%, was attributed primarily to jars and lids. The substitutes and poor quality glassware, and smelly rubber closures were often not satisfactory (Hogan, 1944).

Most of the current outbreaks of botulism were traced to underprocessed home canned vegetables (Foster, 1968; United States Department of Health, Education, and Welfare, 1968; 1972). Annually, in the United States, 10 to 20 outbreaks of botulism are reported with 20 to 30 people affected, and 2 to 5 deaths occurring (Kauther and Lynt, 1972). Botulinal toxin has been found in a large variety of foods with the types of foods involved varying according to food preservation and eating habits in different regions. The spoiled foods usually are associated with an inadequate or minimal preservation treatment, held

for some time unrefrigerated and consumed without proper heating. The best control of botulinal toxin in home canned foods is proper processing methods.

Food supply. Home production adds greatly to the average value of food used at home by farm families (United States Department of Agriculture, 1965a). This accounts for 25% of the total food supply on rural farms in the South (United States Department of Agriculture, 1965b). The results of the 1965 Food Consumption Survey showed that 91.2% of the rural farm households consumed home produced food during the week of the survey. The specific types of these foods consumed by percentages of families in the survey include: meat - 51.5%; vegetables - 75.8%; fruits - 39.6%; and dried fruits and vegetables - 6.4%. Preserving available foods allows a family to become more self-sufficient and to have permanent self-control of the food supply (Barnett, 1970).

Preservation methods. Recommended techniques for food preservation are available through the United States Department of Agriculture and State Extension Services (Office of Consumer Affairs, 1973; and Noble and Hendren, 1971). Manufacturing corporations, and commodity boards and councils produce educational materials which give suggestions for food preservation (Anonymous, 1972c; Anonymous, 1969a; Anonymous, 1969b).

CHAPTER III

PROCEDURES

Prior to the collection of data in the Spring of 1973, many reconnaissances were made to Hancock County to become enculturated. General information about the county, cultural patterns, and terminology was obtained from local store keepers, families, and professionals. This background enabled the researcher to gain a perspective into her area of research (Bleibtreu, 1973).

Sample

The Tennessee Cooperative Extension Service cooperated in this study providing the names and addresses of homemakers who were participating in the Expanded Foods and Nutrition Education Program (EFNEP) and of the 24 homemakers who were active in the Home Demonstration Club (HDC) in Hancock County, Tennessee. The EFNEP homemakers' names were on five unequal lists representing residence in different parts of the county. A random selection was made from each list in proportion to the area participation to include a total of 18% (30) of the EFNEP homemakers. All of the HDC members were selected for the sample. The researcher was able to contact and interview all but 4 homemakers in the proposed sample (2 from the EFNEP group and 2 from the HDC group).

Interview Schedule and Methods

Development of interview schedule. A three part interview schedule, having both open-end and closed-end (coded) questions was designed and pretested by the researcher and 2 assistants (Appendix A). One section included questions about the food preservation methods as actually practiced by the respondant, as well as the variety and amounts of foods preserved. The seven forms of food preservation studied were as follows: canning, pickling, jelly making, freezing, curing, drying, and burying. The second section included questions about selected environmental characteristics of the homemaker. The third section contained observations and an evaluation by the interviewer of the homemaker's interest and pride in food preservation.

The interview schedule was pretested in the Hancock County Public Health Clinic waiting room by the researcher and 2 assistants. The amount of time required to complete the interview schedule necessitated pretesting by preservation methods in the clinic. For each of the 7 methods of food preservation, the interviewers completed five forms. The total interview schedule also was pretested by the researcher with five homemakers in the privacy of their homes.

The schedule was revised to clarify statements and terminology, and to adapt it to the local area.

To the homemakers in Hancock County, "preserved" referred to the making of jelly, jam, and preserves. "Put-up" was the term used to include all methods of preserving food. Likewise, the term "bury" had

little meaning for the homemakers. "Hole-up" was the local jargon referring to underground storage of food.

Implementation of interview schedule. Each informant was interviewed in the privacy of her home regarding the food preservation she had done during the previous year (June, 1972 to May, 1973). A semistructured interview schedule was used by the researcher. When misunderstanding of a question or a response was a possibility, the researcher asked probing questions to insure an accurate description. Following the interview, observations regarding the respondent, the home, and the atmosphere of the session were recorded to aid the researcher in interpretation of the data. As a token of appreciation for the homemaker's cooperation, each woman was given a booklet prepared by the researcher containing recipes selected for the ease of preparation and adaptation to locally available foods.

Analysis of Data

The data were coded onto the interview schedule and then transferred to the computer for tabulation of percentages, statistical analysis, and frequencies. Percentages were used to determine the extent of participation in the various preservation methods and the foods being preserved. A two-tailed analysis of variance was applied to the selected environmental characteristics of the HDC and EFNEP homemakers to determine differences in these 2 groups. A t-test for small sample sizes was used to find group differences in the type of food preservation methods being

used. Frequencies were tabulated to determine the amount of foods being preserved by each homemaker.

Combined samples. In order to determine the most commonly used food preservation methods, the responses of the HDC and EFNEP homemakers were combined and tabulated. For each of the 7 food preservation methods studied, the percentage of homemakers using that method was determined.

The variety of foods preserved by homemakers was calculated by 2 methods. First, the variety of foods preserved was tabulated as a percentage of all foods preserved by all 7 methods. Then, within each method, the percentage of homemakers preserving a specific food was determined.

Difference between the groups. A two-tailed analysis of variance was used to find the differences between the HDC and the EFNEP homemakers in relation to educational level, social participation score, annual family income, age of the homemaker, and number in the family. Mean scores were tabulated to show the actual differences between the two samples. Percentages for the HDC and EFNEP homemakers were determined for working outside the home, place of residence, electricity in the home, and type of primary cooking stove. Group comparisons were made.

The Social Participation Scale measures the degree of a person's participation in community groups and institutions (Chapin, 1955). The final score is computed by counting each membership as 1, each group attended on a regular basis as 2, each group requiring a financial

contribution as 3, each committee membership as 4, and each office held as 5.

Group difference in preservation methods. A t-test for small sample sizes was used to find group differences in the type of food preservation methods being used. In order to determine the specific differences, the percentages of homemakers in each group using the 7 preservation methods were tabulated.

Amount of food preserved. The quantity of food preserved by each of the preservation methods was determined for each homemaker. The average (mean) amounts of food preserved in each method by the HDC and EFNEP homemakers were determined. The food quantities then were grouped into ranges. A frequency distribution for the HDC and EFNEP homemakers, showing the number of women preserving the various quantities of foods, was made. Modes, the midpoints of these ranges showing the amount of foods preserved by the most homemakers in each group, were determined.

Food preservation methods used. The data were used to describe the most frequently used procedures for each of the preservation methods. Exceptions to the norm were noted.

Evaluation of pride. The researcher made a subjective evaluation of the homemakers' pride regarding the foods which they had preserved. The women's pride as demonstrated by their actions and/or statements were studied in relation to the quantity as well as the quality of the foods preserved.

CHAPTER IV

RESULTS AND DISCUSSION

Combined Sample Participation

Ninety-six percent of the 50 homemakers interviewed in Hancock County, Tennessee, participated in some form of home food preservation. This compares to 91.2% of the southern, rural, farm families found to be preserving food in the 1965 Food Consumption Survey (United States Department of Agriculture, 1965b). For many of the Hancock County families, their preserved foods provided a major source of their food supply for the coming year. "What I don't put-up, we don't eat," and "I put-up everything I can get my hands on" represent the attitude of the homemakers regarding their responsibility to their families' welfare.

Various social factors may influence the amount of food preservation done by these homemakers. Lack of convenient transportation to a grocery store may be a factor because the homemaker can prepare only what she has available. Sixty-two percent of the homemakers did not drive and had to depend upon their husbands, relatives, or neighbors to take them shopping.

A social tradition that almost required that homemakers preserve some food was observed. Even homemakers who seemed not to have an economic need for preserving food wanted to have a part in this traditional summer activity. Many women expressed a pride in fulfilling the

responsibility to supply a part of the families' food and/or to produce attractive and flavorful foods for future use.

Ninety percent of the homemakers obtained the food from their own gardens or trees, so fruits and vegetables common to East Tennessee were the foods most frequently preserved. The 2 homemakers who did not preserve food were physically unable to have a garden.

The homemakers participated to varying degrees in the 7 forms of food preservation studied (Figure 1). The data indicate the percent of homemakers performing the various types of preservation methods and the foods most commonly preserved. The foods listed in each method were preserved by at least 40% of the homemakers using that method. Green beans, red tomatoes, and cucumber pickles were preserved by over 75% of all homemakers (peaches were too expensive or unavailable in the area during the preserving season of June, 1972, to August, 1972).

Canning, pickling, jelly making, and freezing are the more frequently used methods of food preservation. Canning was done by 96% of the homemakers. All women who preserved food did some canning. Ninety percent of the homemakers pickled some fruits and/or vegetables. The families using home preserved jellies, jams, preserves, or fruit butters may be greater than 78%. Two homemakers indicated that they had made sufficient jelly for two years the previous season (Summer 1972). The percentage of homemakers freezing food, 62%, is equal to the percentage of homes having upright or chest freezers.

Curing, drying, and burying foods were each done by fewer than 50% of the families. Curing, which was done by 44% of the families, was

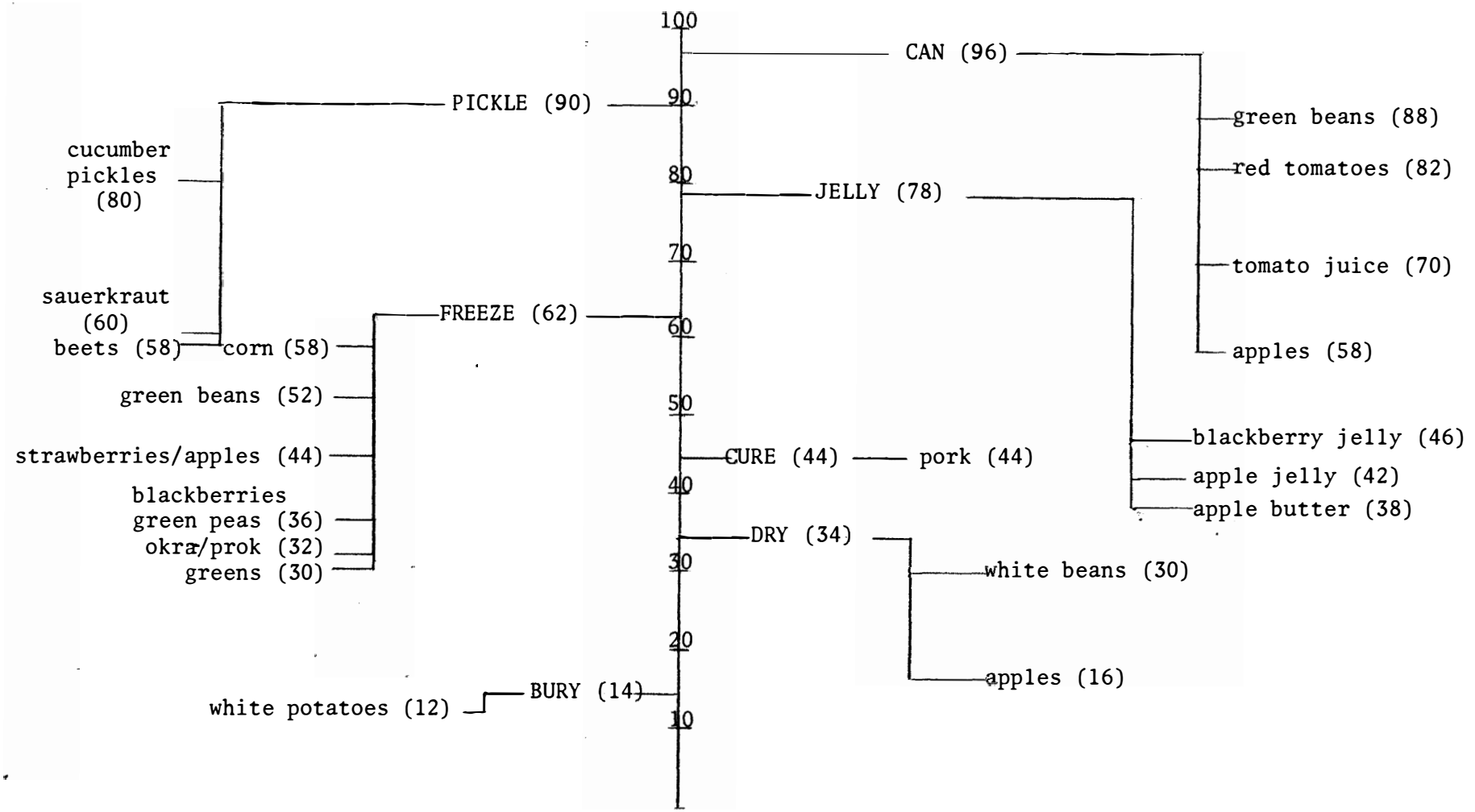

Figure 1. The food preservation methods and the foods most commonly preserved by percentage of homemakers.

limited to those who raised hogs. Pork was the only meat preserved by a curing method. According to the 1965 Food Consumption Survey, 6.4% of the southern, rural, farm families dried fruits and vegetables (United States Department of Agriculture, 1965b). In Hancock County, 34% of the homemakers dried foods, primarily white beans and apples. Several others indicated they had dried foods in the past, but had found other methods more satisfactory. Burying foods, better known in the area as "holing-up," was done by 14% of the families. Many others indicated storing potatoes and turnips in the basement or "dairy" (cold earth cellar).

Group Comparison of Environmental Factors

The Home Demonstration Club (HDC) members and the Expanded Foods and Nutrition Education Program (EFNEP) participants differed in some of the environmental factors which were studied. Educational level, social participation score, and income were higher ($P < 0.01$) for the HDC homemakers than for the EFNEP group (Table 1). However, the age range of the homemakers and number of family members were similar for both groups.

Educational level. Seventeen of the EFNEP homemakers had less than an eighth grade education (Table 2, Appendix B). None had finished high school with the highest level of formal education the ninth grade. Of the HDC homemakers, only 2 had not completed high school and none had less than an eighth grade education. Five of the 20 completing high school had attended college. The mean of the educational level attained was 5.4 years for the EFNEP homemakers and 12.1 years for the HDC homemakers.

TABLE 1

MEANS AND F-VALUES OF SELECTED ENVIRONMENTAL FACTORS FOR HDC[a] AND EFNEP[b] HOMEMAKERS

Environmental Factors	Means		F-Value
	HDC	EFNEP	
Educational level, years	12.1	5.4	114.8[c]
Social Participation Score, points	12.8	0.9	59.4[c]
Annual family income, dollars	7,364	1,643	44.9[c]
Age of homemaker, years	49	51	0.2
Number in family, persons	2.3	3.3	2.5

[a]Home Demonstration Club.

[b]Expanded Foods and Nutrition Education Program.

[c]($P < 0.01$).

Social participation scores. The range of Social Participation Scores, which are based upon the extent of participation in formally organized groups, differed within the 2 groups. The HDC homemakers social scores varied greatly within that group with 3 women having scores above 20 (Table 2, Appendix B). All of the EFNEP homemakers had a score of 3 or less, with 19 of 28 indicating no group participation. Mean scores for the 2 groups were 0.9 and 12.8 points for the EFNEP and HDC homemakers, respectively. The socialization process is influenced by group participation (Abell, 1969) and a person's food habits reflects his interaction with a particular group (Cussler and DeGive, 1952). Perhaps the HDC homemakers who seemed not to have an economic need for preserving food were manifesting a social need to remain accepted in the community. This Social Participation Score does not include informal interaction.

Annual family income. The average annual family income of the EFNEP homemakers was $1,643 as compared to the Hancock County median family income of $1,442 (University of Tennessee, 1971b). Eighteen of the 28 families received annually less than $3,000. The HDC family income average was $7,364 with 9 of 22 earning more than $10,000 (Table 2, Appendix B).

Age of homemaker and number in the family. Although the age of the homemakers and the number in their families were not statistically different between the 2 groups, 2 of the EFNEP families had 10 or more in the family. Average family size was 3.3 and 2.3 persons for the EFNEP

and HDC homemakers, respectively. The average ages of the homemakers in both groups were almost the same, with the EFNEP homemakers being slightly older. Distribution of the number of homemakers within each age range was almost equal (Table 2, Appendix B).

Work and residence. On a percentage basis, working outside the home and the place of residence differed for the 2 groups. Fifty percent of the HDC homemakers were employed away from the home and none of the EFNEP homemakers had paid jobs (Table 2, Appendix B). Only 7% of the EFNEP homemakers lived in Sneedville, but 27% of the HDC homemakers lived within the village.

Other factors. Electricity was available to all of the homes (Table 2, Appendix B). Twenty-one of the homemakers from each group used electric stoves for their primary cooking. Six of the EFNEP and 1 of the HDC homemakers used wood stoves.

Differences in Groups in Relation to Preservation Methods

Freezing and curing. The proportion of homemakers in each of the groups participating in the various forms of food preservation was different ($P < 0.01$) for freezing and curing only (Figure 2). Greater percentages of HDC homemakers than the EFNEP homemakers froze and cured meat. These differences may be related to income. Possibly more of the HDC homemakers are able to afford freezers and/or the production cost and facilities to raise their own meat.

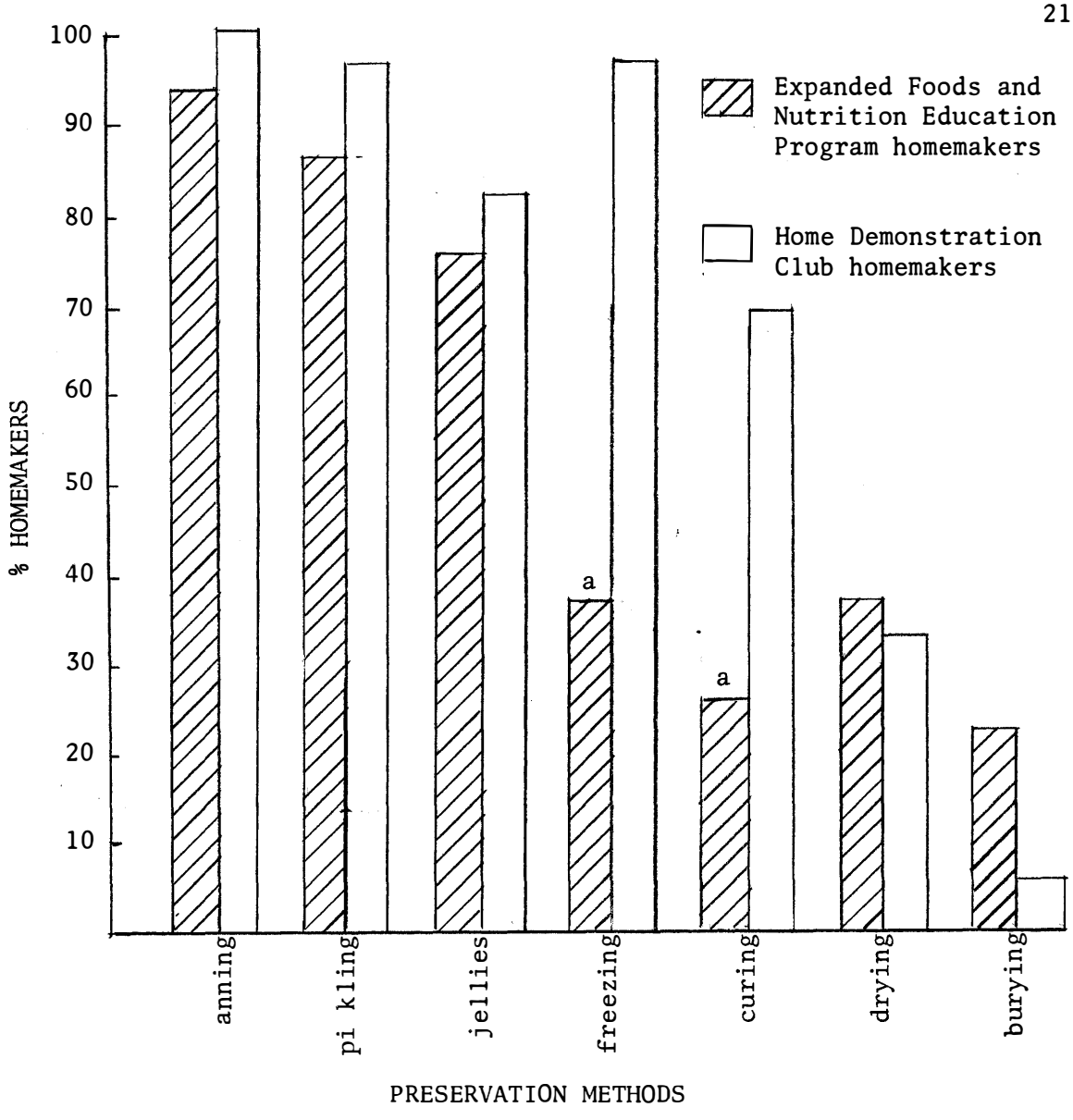

Figure 2. Percentage of Home Demonstration Club and Expanded Foods and Nutrition Education Program homemakers preserving foods by the various methods.

[a] ($P < 0.01$).

Other preservation methods. Canning, pickling, making jelly, drying, and burying were food preservation methods used equally by the 2 groups. The former 3 methods are used more frequently by both groups (Figure 2).

Amount of Food Preserved

The amount of food preserved by the HDC and the EFNEP homemakers varied both within and between the groups. The data in Figures 3, 4, 5, and 6 show the distribution of the number of women from each group preserving various amounts of food. The modes in these graphs are noted because they represent the food quantity preserved by the most homemakers.

Canning. The distribution of the quantity of canned food done by the homemakers in each group was similar (Figure 3). Seventy-five quarts of food were canned by the most homemakers in each group. The means for the HDC homemaker and the EFNEP homemaker were 162 quarts and 211 quarts, respectively.

Pickling. The number of HDC homemakers making pickles peaks at 38 quarts (Figure 4). Although the number of EFNEP homemakers making pickles declines with increasing quantities, several are preserving large amounts resulting in an average of 73 quarts. This may indicate that the HDC families use pickles as a condiment, whereas the EFNEP families depend on pickled foods as a major source of the food supply because equipment for other preservation methods is unavailable.

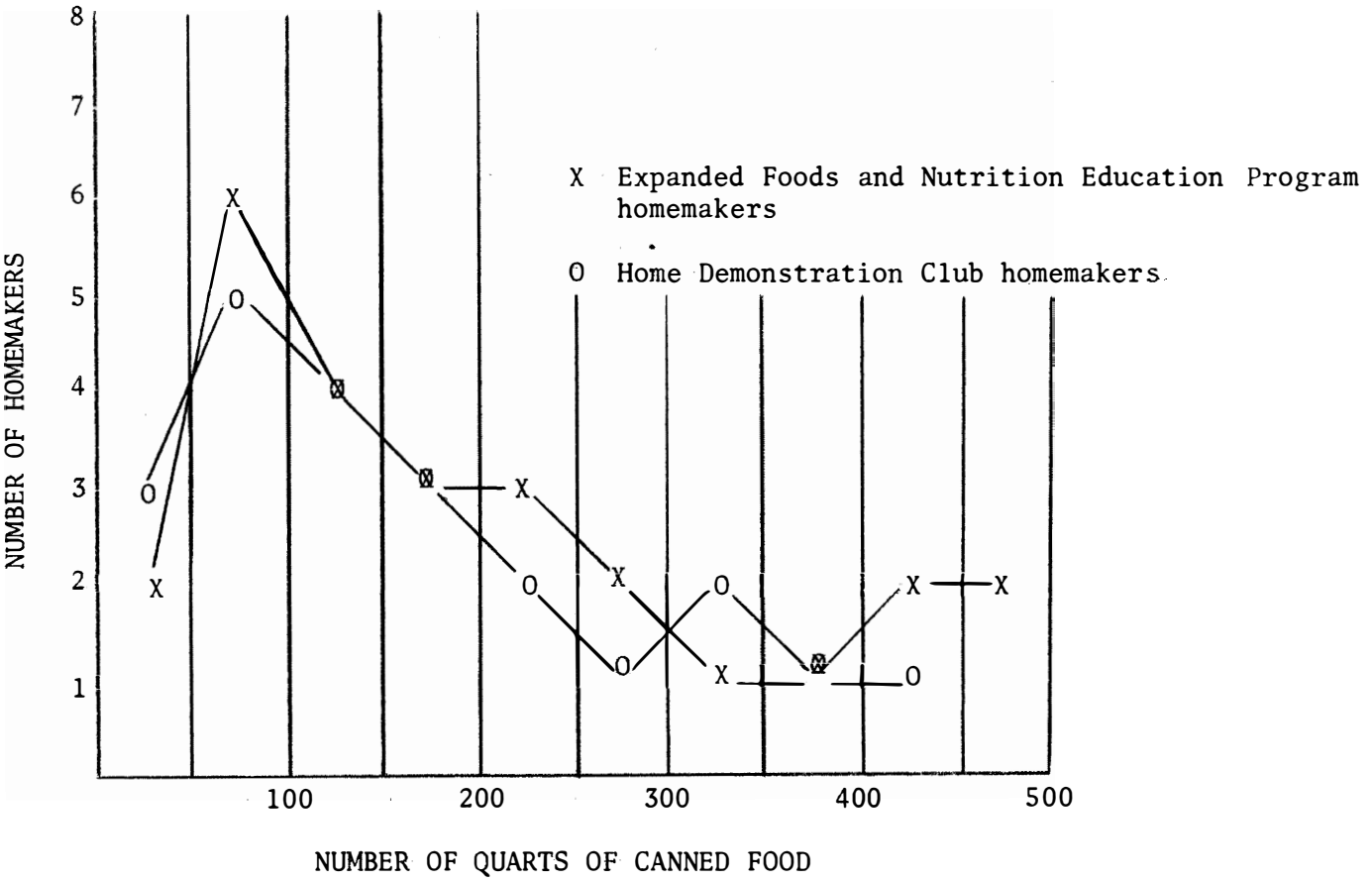

Figure 3. Homemakers and the amount of foods they canned.

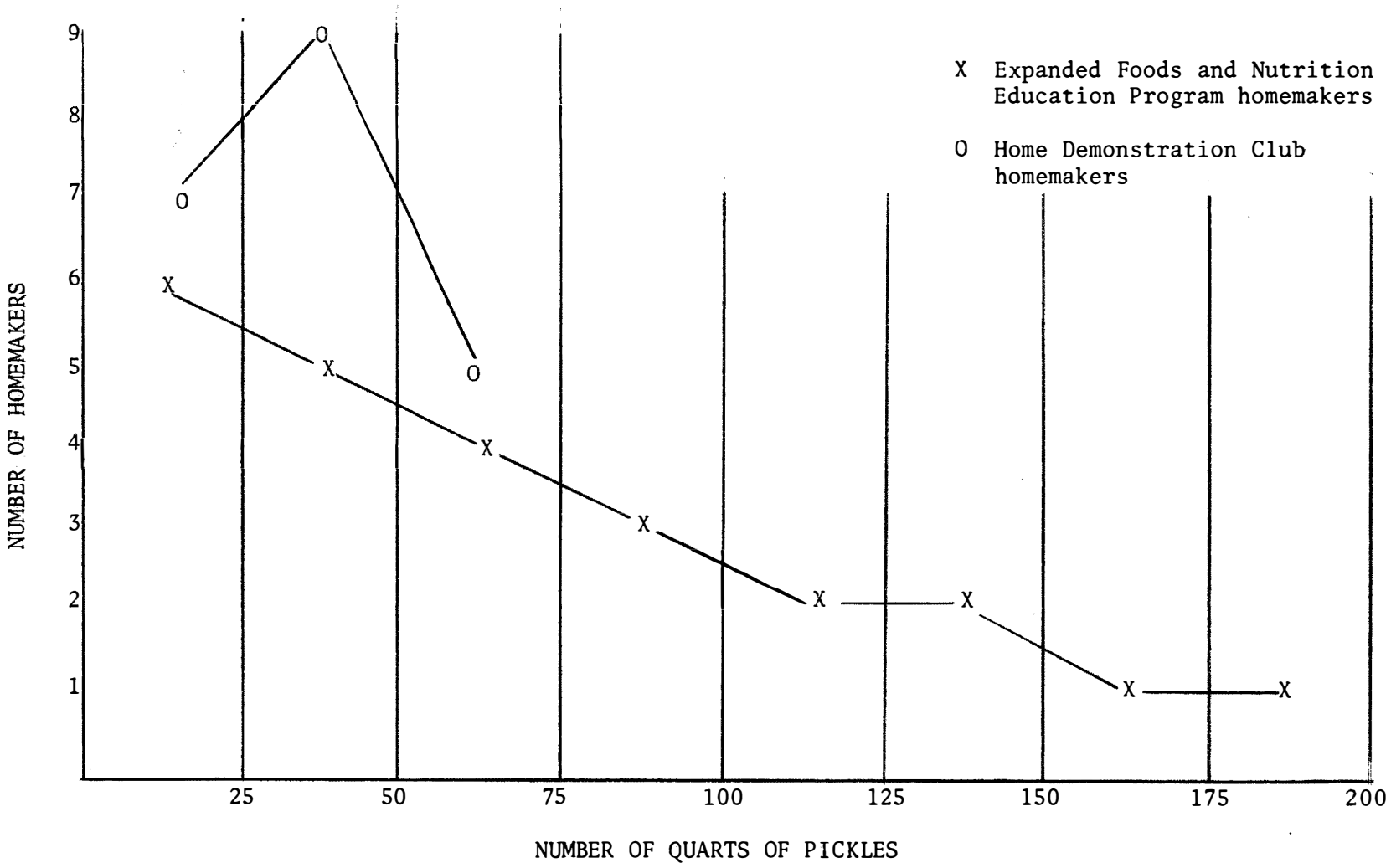

Figure 4. Homemakers and the amount of foods they pickled.

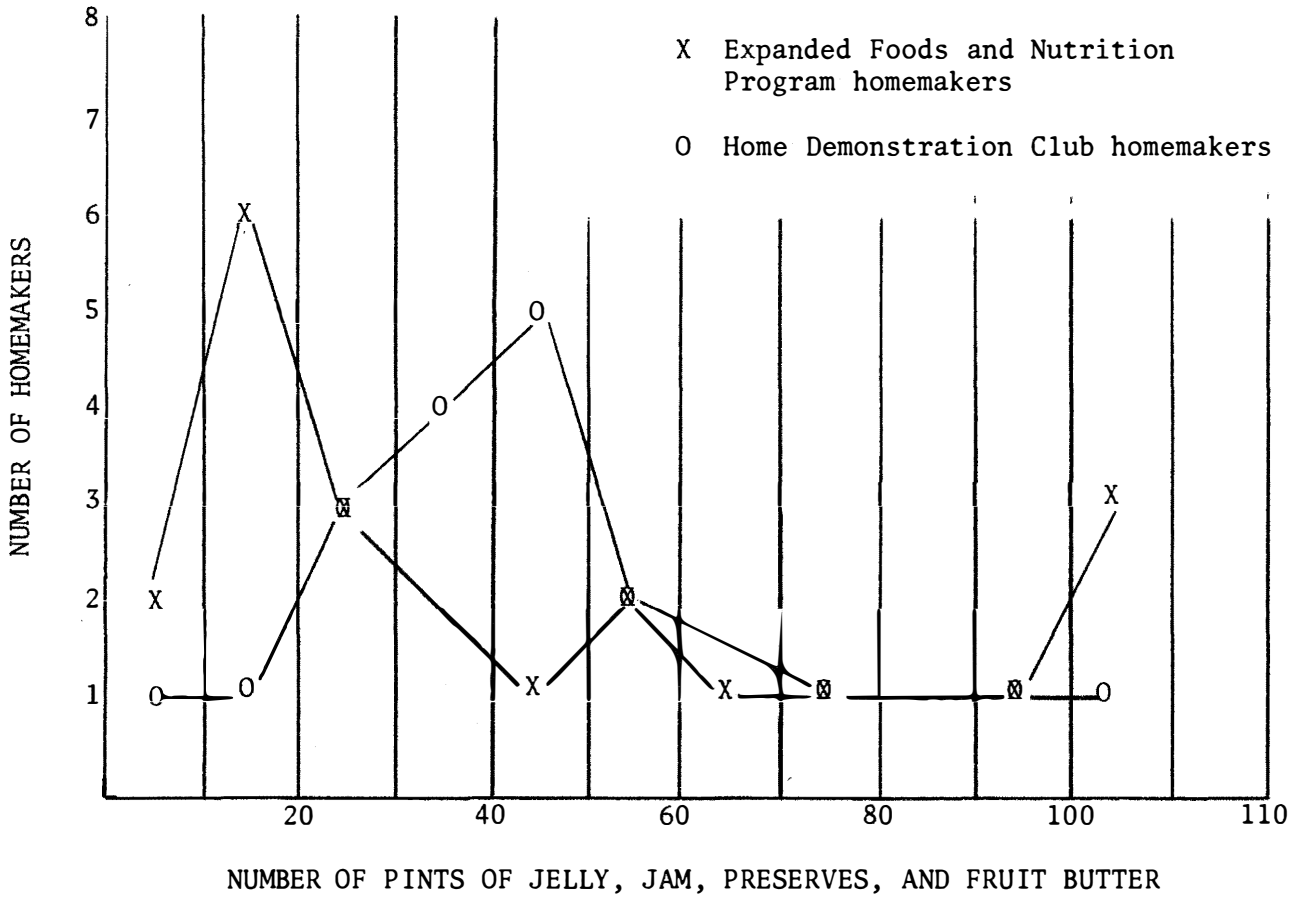

Figure 5. Homemakers and the amount of jelly, jam, preserves, and fruit butter they preserve.

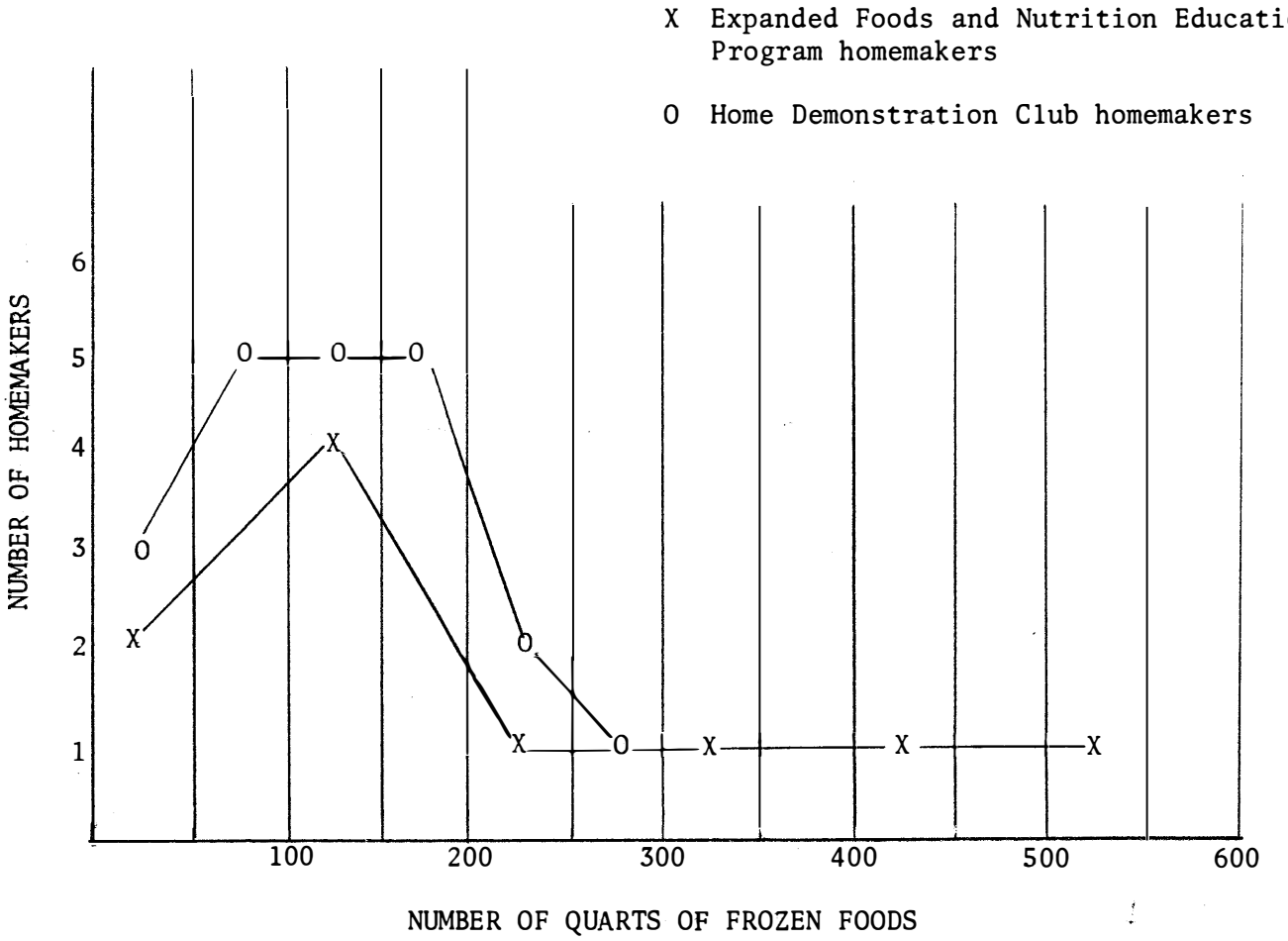

Figure 6. Homemakers and the amount of foods they freeze.

Jelly making. In the making of jelly, jam, preserves, and fruit butter (Figure 5), most EFNEP homemakers preserved 15 pints, but several of the homemakers made much greater quantities bringing the average number of pints preserved to 54. Most HDC women preserved 45 pints, with the average production being 67 pints.

Freezing. Most HDC homemakers froze 75, 125, or 175 quarts of food (Figure 6). No one froze more than 300 quarts. The mean for the HDC women was 127 quarts of frozen food. Although most of the EFNEP homemakers froze 125 quarts, the data indicate that some women preserve greater quantities by freezing. The mean number of quarts frozen per EFNEP homemaker was 262, which is twice as great as the average amount frozen by the HDC homemakers.

Curing, drying, and burying. Curing, drying, and burying were done by fewer families in both groups than other methods of home food preservation. Most HDC and EFNEP families curing meat cured one or two hogs. When more than 3 animals were cured, the meat was shared with relatives or sold. The EFNEP homemakers dried an average of 37 quarts of food with most producing 25 quarts. The HDC homemakers who dried foods varied equally in the quantities preserved with an average of 25 quarts. Only one HDC family buried food. The 6 EFNEP families buried from 1 to 50 bushels of food.

Description of Procedures Used in Food Preservation

Within each preservation method, the actual procedures used by the homemakers in the 2 groups were similar. Exceptions to the common practices occurred in both groups.

Canning. Of the homemakers interviewed, canning of fruits and tomatoes was primarily done by the open kettle method. Although 66% of all the homemakers had pressure canners, only 3 used them for processing fruits and tomatoes. Homemakers not owning pressure canners often shared one with a neighbor or mother. The hot water bath method was used by 1 homemaker to can fruits and by 4 to can tomatoes.

Vegetables usually were processed with a pressure canner. However, 10 used a hot water bath with 1 using a lard can heated over a wood fire in the yard. No one canned low acid vegetables by the open kettle method. The homemakers used their canning booklets to determine processing times in the pressure canner.

Meats usually were pressure processed. Exceptions to this were 2 homemakers using hot water bath and 3 homemakers frying the sausage and covering it with hot lard to form a seal in the jar. Boudreauz (1947) also found this latter method used by homemakers in Louisiana. This is a short-term preservation in that meat can be kept 2 months. If the winter months are cooler, the meat may be held longer.

When using the 2 piece lids, no homemaker reused the flat metal lids for foods which were to be heat sealed. However, if the metal lids were not bent, 18 women reused them for apple butter, pickles, and

sauerkraut. For jellies and pickles, several used the lids which came on the jars (examples: mayonnaise and peanut butter jars).

Pickling. All HDC and EFNEP homemakers who pickled fruits and vegetables used a short method and open kettle process. One homemaker sealed her pickles in a pressure canner, and 4 poured hot liquid over the food in the jars.

Homemakers using longer pickling methods were making "special" pickles with pickling times ranging from 1 day to 1 month. Sauerkraut usually was made with hot water, and stored in jars with the lid tightly affixed.

Jelly, jam, preserves, and fruit butter. When making jelly, jam, and preserves, a commercial pectin was usually added by the HDC and EFNEP homemakers. Three women also used pectin in their preparation of apple butter.

The HDC and EFNEP women stored their jellies, jams, preserves, and fruit butters in various sized jars and sealed them with a lid which was screwed onto the jar. Only 8 homemakers used a paraffin seal.

Two homemakers made apple butter over an outside fire in a brass kettle. These kettles were shared with their cousins, sisters, and other members in their families.

Freezing. All of the HDC and EFNEP homemakers freezing foods had chest or upright freezers. Although heat treatments were rare for fruits (except applesauce), the vegetables were blanched or "cooked to

almost done." The HDC and EFNEP homemakers normally packaged their food in freezer boxes or bags. Two homemakers used bread bags and 2 women froze their green beans in 2 thicknesses of a brown paper bag (these 2 women were neighbors).

Curing. All HDC and EFNEP families curing pork had a smokehouse where the meat was cured and stored. The meat preserved in Hancock County is salted while still warm. This technique could result in bone souring (Anonymous, 1972c).

The curing times used by the HDC and EFNEP families were dependent upon the temperature and humidity of the season. Apparently the end point of the curing period is arbitrarily determined.

Following the curing process, the Hancock County families removed the salt with scalding water; covered the meat with borax and pepper; and hung it in cloth bags. Proper wrapping is one of the best methods to prevent the invasion of skippers and other insects into the meat (Anonymous, 1972d).

Only 1 family sugar-cured hams. These were sold in their grocery store.

Drying. The HDC and EFNEP homemakers dried white beans in the pods by stringing and hanging them on nails on the porch or in the sun. One woman placed them behind the wood stove and 1 dried beans in the oven.

Untreated apples usually were placed in the sun, but brought inside at night and when it rained. No HDC or EFNEP homemaker blanched or sulfured the fruit prior to drying to prevent enzymatic browning.

The majority of the homemakers drying foods stored them in plastic bags in the freezer. One kept the dried food in a pillow case on the back porch and 2 stored them in paper bags in inconspicuous places around the house (behind doors, in closets, etc.).

Burying. Both the HDC and EFNEP homemakers used a straw pack for the vegetables which were buried. The hole was dug in a place which would drain and/or be protected from rain (i.e., inside the barn). In areas where the average winter temperature is 30°F or lower, some fruits and vegetables can be stored by the straw pack method (United States Department of Agriculture, 1973). The average temperature in the Hancock County area for October, 1972, to February, 1973, was 43.6°F (United States Department of Commerce, 1973). None of the monthly averages, nor the normal temperatures (20 year average) were below 30°F. This temperature factor may be the reason fewer people preserve food by burying than any other method of home food preservation. Several homemakers indicated storing vegetables in sacks, bags, or baskets in a basement or "dairy."

Pride in Food Preservation

Throughout the study the researcher observed that both the HDC and EFNEP homemakers had pride in their food preservation accomplishments. This pride was expressed because of the added food provided for the family and/or of making food products which were attractive, flavorful, and "special."

Food quantity. Twenty-seven homemakers expressed satisfaction in having added to the food available to their families (Table 3, Appendix C). The homemakers seem to accept responsibility for the production and extension of the food supply for their families throughout the year. This was manifested by their comments regarding the gardens and being "proud to be able to put-up so much food." Women with larger families and/or adolescents recognized the necessity of having larger quantities of foods available.

Women measured the adequateness of their food by having a full freezer or by having used all of their canning jars. At the time of the interview, 1 woman still had a full freezer. She was not concerned about planting a garden believing that she had sufficient food for her small family.

The older homemakers whose children were no longer at home expressed having preserved more foods when their families were larger. Sometimes this admission of preserving less food was expressed as an apology. Perhaps it was that a part of their sense of being needed had decreased.

Inaccessibility to a grocery store also was noted as a reason for the homemakers to preserve food. The geography of the county, distribution and size of the grocery stores, and limited transportation contributed to the homemakers dependence upon foods which they preserve themselves.

Food quality. The quality and variety of the preserved foods provided a source of pride for 13 HDC and EFNEP homemakers as observed by the researcher (Table 4, Appendix C). This is fewer than those

expressing quantity pride. The difference may be due to humility and/or the values placed upon the reasons for preserving food.

Pickled foods were most often mentioned as having exceptional quality. Perhaps bright colors and distinct flavors were associated with the pickled foods.

Foods not indigenous to the area also were mentioned with pride. This may be a manifestation of the creative spirit of these homemakers.

Two women mentioned having their teenage daughters aid with the food preservation (Table 5, Appendix C). This too is a source of pride, for it is a way of teaching their children a household task and perhaps transmitting basic family values.

Implications of the Study

This study raises several questions about the effect of the family environmental conditions on home food preservation and about the influence of home food preservation on the family. Home economists and other professionals need to be aware of these conditions and use the information for the betterment of families.

Values and health. 1. How does participation in the food preservation activity affect the children of a family? How does home food preservation, which furnishes a variety of foods over an extended period, affect the quality of the children's diet? Does the family working together for their common good help establish attitudes and values in the children regarding family interdependence?

2. What values encourage a homemaker to preserve food, and are these values related to quantity of food produced or quality of the finished product? Can these values be related to other food patterns of the family?

3. When 66% of the homemakers in this study had pressure canners, why are they canning fruits and tomatoes by the open kettle method? What effect may the low acid tomatoes have on the health and food habits of these families?

Transmission of food information. 4. How are food preservation methods transmitted? With the rapid increase of food prices in 1973, there are indications that more people are preserving foods. What is the learning source for home food preservation? Could it be the homemaker's mother, a friend, a professional home economist, the newspaper, a magazine, or other sources? What mix of these information channels is the most effective in transmitting correct knowledge which will result in advantageous behavioral change?

Availability of foods. 5. Although 96% of the homemakers in this study were preserving food, will the increased cost of foods in 1973 cause these homemakers to preserve a greater quantity of food than they have prepared in the past?

6. In metropolitan centers where families from rural areas have migrated, can city gardens become a part of urban renewal? Could pressure canners and rental space in institutional freezers be available in community centers? Would it be profitable and satisfactory for credit

arrangements to be made to aid low-income families to purchase foods in season and to preserve them for the future?

7. What part of the food supply is furnished by home preserved foods? More research is needed to determine the variety of foods available in the local grocery stores. What are the amounts, frequencies, and kinds of foods purchased? How does the distance to and the completeness of the local grocery stores affect the amounts and types of food preserved?

CHAPTER V

SUMMARY

The types of foods, amounts, and methods of food preservation used by the Home Demonstration Club (HDC) members and the Expanded Foods and Nutrition Education Program (EFNEP) participants in Hancock County, Tennessee, were studied. Food preservation methods included the following: canning, pickling, jelly making, freezing, curing, drying, and burying. Selected environmental factors which may influence these practices were investigated.

The 2 groups, HDC and EFNEP homemakers, were interviewed by the researcher in their homes with a three part interview schedule. This included a section concerning food preservation practices, a section describing environmental factors, and a section for observations and evaluation by the researcher.

As a combined sample, 96% of the HDC and EFNEP homemakers participated in some form of food preservation. The percentages of homemakers using the various methods of food preservation differed with over 50% canning, pickling, making jelly, and freezing.

Educational level, social participation score, and income were all higher for the HDC homemakers than the EFNEP women ($P < 0.01$). Age of the homemaker and the number in the family were similar for the two groups.

The proportion of homemakers participating in the various forms of food preservation was different for freezing and curing only. These differences may be related to the family income.

The amount of food preserved varied both within and between the groups. In both groups, the average amount of food preserved was greater than the amount most frequently preserved. For most homemakers, their preserved foods added to the total food supply.

Preserving methods of the HDC and EFNEP homemakers were similar. All of the methods are not the most currently recommended, however all have been acceptable in the past. Exceptions to the commonly used methods occurred in both groups.

The HDC and EFNEP homemakers displayed pride in their preservation accomplishments. Statements of the homemakers expressed their perception of adding to the food supply for the family and/or of making food products which were attractive and flavorful.

LIST OF REFERENCES

LIST OF REFERENCES

Abell, H. C. 1969. Sociological factors controlling food acceptance; J. Canadian Dietetic Assoc. 30:221.

Anonymous, 1968. New South notes. New South. 23:150.

Anonymous, 1969a. Kerr home canning cookbook and how to freeze food. Consumer Products Division, Kerr Glass Manufacturing Corporation, San Springs, Oaklahoma.

Anonymous, 1969b. Blue book easy guide to tasty, thrifty, home canning and freezing. Ed. 28. Ball Brothers Company, Inc., Muncie, Indiana.

Anonymous, 1971. Nonprofessionals teach nutrition to low-income families in Maryland. Appalachia. 4(4):28.

Anonymous, 1972a. Preserving vegetables. In "Foxfire," Ed. Wigginton, E., p. 174. Doubleday and Company, Inc., Garden City, New York.

Anonymous, 1972b. Tool up for home canning. Better Homes and Gardens. 50(5):144.

Anonymous, 1972c. A complete guide to home meat curing. Morton Salt Company, Chicago, Illinois.

Barnett, H. G. 1970. Consultants and executives, In "Applied Anthropology," ed. Clifton, J. A., p. 59. Houghton Mifflin Company, Boston, Massachusetts.

Bleibtreu, H. K. 1973. An anthropologist views the nutrition profession. J. Nutr. Educ. 5:111.

Boudreaux, M. C. 1947. Food preservation methods used by a selected group of one hundred rural families in St. Landry Parish, Louisiana. Master thesis, Louisiana State University and Agricultural and Mechanical College, Baton Rouge, Louisiana.

Chapin, F. S. 1955. Appendix B—Social participation scale, 1952 edition. In "Experimental Designs in Sociological Research," p. 276. Harper and Brothers, New York, New York.

Crabb, A. L. 1966. The disappearing smokehouse. Tennessee Historical Quarterly. Ed. McBride, R. M. 25:155.

Cussler, M., and DeGive, M. L. 1952. "'Twixt the Cup and the Lip." Twayne Publishers, New York, New York.

Douglas, W. O. 1962. The people of Cade's Cove. National Geographic. 122:60.

Eppright, E. S., Fox, H. M., Fryer, B. A., Lamkin, G. H., and Vivian, V. M. 1970. 2. Nutrition knowledge and attitudes of mothers. J. Home Econ. 62:327.

Foster, E. M. 1968. Microbial problem in today's foods. J. Amer. Dietet. Assoc. 53:485.

Gifft, H. H., Washbon, M. B., and Harrison, G. G. 1972. Influences on American eating patterns. In "Nutrition, Behavior and Change," p. 97. Prentice-Hall, Inc., Englewood Cliffs, New Jersey.

Heywood, E. 1966. Home Demonstration Clubs and Councils. In "Cooperative Extension Work," Ed. Sanders, H. C. p. 251. Prentice-Hall, Inc., Englewood Cliffs, New Jersey.

Hill, M. M. 1969. Creating good food habits—start young, never quit. In "Food for Us All—The Yearbook of Agriculture - 1969," p. 260. U. S. Government Printing Office, Washington, D. C.

Hogan, M. 1944. Wartime home food conservation: the national picture. J. Home Econ. 36:139.

Jerome, N. W. 1967. Food habits and acculturation: dietary practices and nutrition of families headed by Southern born Negroes residing in a Northern metropolis. Ph. D. thesis, University of Wisconsin, Ann Arbor, Michigan.

Kauther, D. A., and Lynt, Jr., R. K. 1972. Botulism. J. Food Sci. 37:985.

Lee, D. 1959. The joy of work as participation. In "Freedom and Culture," p. 27. Prentice-Hall, Inc., Englewood Cliffs, New Jersey.

Lewin, K. 1943. Forces behind food habits and methods of change. In "The Problem of Changing Food Habits," p. 37. National Research Council, National Academy of Sciences, Washington, D. C.

National Research Council, 1945. Manual for the study of food habits. Bull. 111, p. 32. National Academy of Sciences, Washington, D. C.

Nelson, P. M. 1944. Spoilage of canned foods in Iowa. J. Home Econ. 36:137.

Noble, N., and Hendren, R. C. 1971. Make pickles and relishes the safe way. Publication 607. Agriculture Extension Service, University of Tennessee, Knoxville, Tennessee.

Office of Consumer Affairs, 1973. Consumer information. General Services Administration, Consumer Product Information Center, Public Documents Distribution Center, Pueblo, Colorado.

Oliver, M. 1967. "Program aides" for work with low-income families - Part IV. Pilot study in Alabama. J. Amer. Dietet. Assoc. 50:483.

Photiadis, J. D. 1970. Rural Southern Appalachia and mass society. In "Change in Rural Appalachia," Ed. Photiadis, J. D., and Schwarzweller, H. K., p. 1, 19. University of Pennsylvania Press, Philadelphia, Pennsylvania.

Sanjur, D., and Scoma, A. D. 1971. Food habits of low-income children in northern New York. J. Nutr. Educ. 3(4):85.

Schorr, B. C., Sanjur, D., and Erickson, E. C. 1972. Teenage food habits. Research. 61:415.

Spindler, E. B., Jacobson, M. E., and Russell, C. B. 1969. Action programs to improve nutrition. J. Home Econ. 61:635.

Tennessee Extension Service, 1972a. Bringing help and hope. SP 182, Agricultural Extension Service, University of Tennessee, Knoxville, Tennessee.

United States Department of Agriculture, 1965a. Food consumption of households in the United States, Spring, 1965, Report No. 1, p. 1. U. S. Government Printing Office, Washington, D. C.

United States Department of Agriculture, 1965b. Food consumption of households in the South: household food consumption survey 1965-66, Report No. 4, p. 145. U. S. Government Printing Office, Washington, D. C.

United States Department of Agriculture, 1973. Storing vegetables and fruits in basements, cellars, outbuildings, and pits. H. and G. No. 119. U. S. Government Printing Office, Washington, D. C.

United States Department of Census, 1970. 1970 Census tabulation for the State of Tennessee, County of Hancock. U. S. Department of Census, Washington, D. C.

United States Department of Commerce, 1973. Climatological data—Tennessee. Vol. 77 (13). National Oceanic and Atmospheric Administration, Environmental Service, Ashville, North Carolina.

United States Department of Health, Education, and Welfare, 1968. Surveillance summary—botulism—United States - 1899-1967, p. 444. Bureau of Disease Prevention and Environmental Control, Washington, D. C.

United States Department of Health, Education, and Welfare, 1972. Ten-state nutrition survey 1968-1970. Pub. No. (HSM) 72-8134. Center for Disease Control, Atlanta, Georgia.

University of Tennessee, 1971a. Population. In "Tennessee Statistical Abstract 1971." 2nd ed. Ed. Currence, M. G. Center for Business and Economic Research, Knoxville, Tennessee.

University of Tennessee, 1971b. Personal income. In "Tennessee Statistical Abstract 1971." 2nd ed. Ed. Currence, M. G. Center for Business and Economic Research, Knoxville, Tennessee.

Weatherford, W. D., and Brewer, E. D. C. 1962. "Life and Religion in Southern Appalachia," Friendship Press, New York, New York.

APPENDIXES

APPENDIX A

April 1973
Doris Phillips
Mary A. Bass

Food Science and
Institution Administration
College of Home Economics
University of Tennessee
Knoxville, Tennessee

Date _____

Group_____

Name _____

Part I.

1. How many people usually eat at your home?_____
   What are their names? How are they related? What are their ages?

Name	Relation	Age

   Do you mind if I ask your age? _____ years

2. What kind of stove do you use?

wood	___(0)	oil	___(4)
electric	___(1)	heating stove	___(5)
gas, bottle	___(2)	hot plate	___(6)
kerosene	___(3)	other, specify	_____

   Do you own another stove which is not being used?_____
   What kind is it?

   Why aren't you using it?

3. Did you put up (can, dry, freeze, etc.) any foods within the last year?___

   If no, Have you ever put up foods?___
   Why didn't you put up any last year?
   no garden___(0) too much trouble___(3)
   ill ___(1) no need ___(4)
   no time ___(2) other, specify _____

(continue to Part II)

4. When putting up foods, what moon or other signs do you follow? List.

5. How are the foods you put up affected by the weather or growing season?

6. Where do you get the foods you put up?
   garden ___(0) bought from store ___(3)
   gathered ___(1) bought from neighbor or relative ___(4)
   slaughtered ___(2) gift from neighbor or relative ___(5)
   other, specify _____

7. What jellies, jams, butters, or preserves did you make?
   If not, Why?

   How much?
   Did you use Sure-Gel or another commercial pectin?
   What kind of covering did you put on the jar?

Foods	Amount	Jelly	Jam	Preserves	Butter	Pectin	Paraffin	Screw lid	other/describe
Apple									
Blackberry									
Currant									
Grape									
Peach									
Pear									
Quince									
Raspberry									

(7. continued)

Foods	Amount	Jelly	Jam	Preserves	Butter	Pectin	Paraffin	Screw lid	other/describe
Rhubarb									
Strawberry									
Strawberry-Rhubarb									
Tomato									
Other									

Where are these foods stored until you're ready to use them?

freezer	___(0)	basement	___(4)
refrigerator	___(1)	dairy	___(5)
cabinet	___(2)	other room in house	___(6)
pantry	___(3)	other, specify	_____

8. What foods did you can?
   If not, Why?
   How much?
   How did you can them? Include time.

Foods	Amount	Pressure	Hot water bath	Open kettle	Time	other/describe
Apples						
Applesauce						
Blackberries						
Cherries, sour						
Cherries, sweet						
Grape juice						
Peaches						
Pears						
Raspberries						
Rhubarb						
Strawberries						
Other						
Asparagus						
Beans, white						
green						
pinto						

(8. continued)

Foods	Amount	Pressure	Hot water bath	Open kettle	Time	other/describe
Carrots						
Corn						
Cucumbers						
Greens						
Hominy						
Okra						
Onions						
Peas, English						
field						
Peppers, sweet						
hot						
Potatoes, sweet						
white						
Squash						
Tomatoes, green						
red						
juice						
Turnips						
Other						
Beef						
Chicken						
Fish						
Pork, sausage						
ribs						
Wild game						
Other						
Beef stew						
Soup mix						
Relish						

Where are these foods stored?

Basement ___(0)
Kitchen ___(1)
Other room ___(2)
Pantry ___(3)
Dairy ___(4)
Other, specify _____

(8. continued)

What kind of jars did you use?
canning jars (Ball, Kerr, etc.) ___(0)
jars purchased with other food in them ___(1)
other, specify_____

What kind of lids do you use?
Can they be used again?
two piece ___(0) ___
glass dome ___(1) ___
zinc ___(2) ___
other, specify_____

What canning equipment do you use?
Pressure canner ___(0)
Pressure cooker ___(1)
Hot water bath canner ___(2)
Iron kettle ___(3)
Aluminum kettle ___(4)
Tub ___(5)
other, specify_____

Where do you can?
Kitchen ___(0)
Back porch ___(1)
Yard ___(2)
other, specify_____

Do you use the cannery?___
If not, Why?
too expensive ___(0) never heard of it ___(2)
too far ___(1) other, specify_____

9. What foods did you bury?
If not, Why?
How much?
How were they buried?
Where were they buried?

Foods	Amount	Drainage	Pitch	Straw	Pack	other/describe	where buried
Apples							
Cabbage							
Potatoes, white							
sweet							
Turnips							
other, specify							

10. What foods did you freeze?
    If not, Why?
    How much?
    Did you do anything to them before freezing them?
    What kind of packaging material did you use?

Foods	Amount	Blanched	Frozen only	Al foil	Freezer paper	Wax paper	Freezer boxes	Plastic bags	other/describe
Apples									
Applesauce									
Blackberries									
Cherries, sour									
sweet									
Grape juice									
Peaches									
Pears									
Raspberries									
Rhubarb									
Strawberries									
other									
Asparagus									
Beans, white									
green									
pinto									
Carrots									
Corn									
Greens									
Hominy									
Onions									
Peas, English									
field									
Peppers, sweet									
Squash									
Turnips									
other									
Beef									
Chicken									
Eggs									
Fish									
Pork									
Wild game									
other									

(10. continued)

Foods	Amount	Blanched	Frozen only	Al foil	Freezer paper	Wax paper	Freezer boxes	Plastic bags	other/describe
Pies									
Soup mix									
other									

What equipment did you use?
freezer ___(0)
chest or upright freezer___(1)
other, specify_____

11. What foods did you dry?
If not, Why?
How much?
Was anything done to the foods before they were dried?
How are these foods stored?
Where are they stored?

Foods	Amount	Blanch	Sulfur	No prep	Glass jar	Paper bag	Attic	Pantry	Kit. Cab.	other/describe
Apples										
Beans, white										
Beets										
Carrots										
Corn										
Okra										
Onions										
Peaches										
Pears										
Peas										
Peppers, hot										
Potatoes, sweet										
Pumpkin										
Soup mixture										
Squash										
Turnips										
other										

(11. continued)

Where were these foods dried?
Sun ___(0)
Behind stove ___(1)
In oven ___(2)
other, specify_____

What equipment did you use?
Cheese cloth ___(0)
Trays ___(1)
Tarp ___(2)
other, specify_____

12. What foods did you cure?
If not, Why?
How much?
What method did you use?
How did you get a smoked flavor?

Foods	Amount	Dry Cure	Brine Cure	Sugar Cure	Smoked	Liquid Smoke	other/describe
Beef							
Fish							kind
Pork							
Poultry							kind
other							

What equipment did you use?
Barrel ___(0)
Smoke house ___(1)
Cardboard box ___(2)
other, specify_____

Where are these foods now stored?
Smoke house ___(0)
Spring house ___(1)
Barn ___(2)
other, specify_____

13. What foods did you pickle?
If not, Why?
How much?
How long did it take to pickle?
How did you close the jar?

Foods	Amount	Time	Hot water Bath	Screw lid	other/describe
Beans, green					
white					
Beets					
Chow chow					
Corn					
Cucumbers					
Pears					
Peppers, sweet					
Pigs feet					
Sour kraut					
Tomato, catsup					
green					
red					
Watermelon rind					
other					

What equipment did you use?
crock or churn jar___(0)
canning jars ___(1)
other, specify_____

14. What other foods did you put up which we haven't mentioned?
How much?
corn meal ___(0)
wheat flour___(1)
molasses ___(2)
grits ___(3)
eggs ___(4)
cheese ___(5)
other, specify_____

Part II.

13. What grade in school did you complete?___
    Other training?
        Business ___(0)
        Nurse ___(1)
        Beautician ___(2)
        other, specify_____

14. Do you work?___
    If yes, Where?
        At home ___
        Away from home ___
        How many hours a week___

15. Do you drive?___
    If no, How do you get to town?

16. In what range is your estimated family income?
    Under 1,000___(00)
    1,000-1,999___(01)
    2,000-2,999___(02)
    3,000-3,999___(03)
    4,000-4,999___(04)
    5,000-5,999___(05)
    6,000-6,999___(06)
    7,000-7,999___(07)
    8,000-8,999___(08)
    9,000-9,999___(09)
    10,000-14,999___(10)
    15,000 and over___(11)

17. With what groups do you regularly meet?
    List

Group	Dues?	Officer?
HDC		
Church		
PTA		
Women's Club		

18. Where is the closest grocery store?
Where do you usually buy your groceries?
Why?

Part III. Observation

19. Place of residence?
Open country___(0)
Hamlet ___(1)
Village ___(2)

20. District number?___

21. Electricity in house?___

22. Water piped in?___

General comments:

Interest of the subject

Weather

Other factors which may influence the subject's responses

Self-pride instilled by preserving foods?

A. Quality of products based on creativity and success.

B. Amount preserved because her efforts have added to the family's food supply.

TABLE 2

PROFILE OF HOMEMAKERS

Environmental Factors	Group		Can		Pickle		Jelly		Freeze		Cure		Dry		Bury	
	A[a]	B[b]	A	B	A	B	A	B	A	B	A	B	A	B	A	B
Number in Family																
1	1	2	1	2	1	2	1	2	0	2	0	0	1	0	0	0
2	6	7	4	7	3	6	2	6	1	7	0	4	1	3	0	1
3	6	4	6	4	6	4	5	4	2	4	2	4	1	2	3	0
4	4	4	4	4	4	4	3	2	3	3	2	2	1	1	1	0
5	4	3	4	3	4	3	4	2	1	3	0	3	1	0	1	0
6	3	1	3	1	2	1	3	1	0	1	0	1	3	0	0	0
7	2	0	2	0	2	0	2	0	1	0	1	0	1	0	0	0
8	0	1	0	1	0	1	0	1	0	1	0	1	0	1	0	0
9	0	0	0	0	0	0	0	0	0	0	0	0	0	0	0	0
more than 9	2	0	2	0	2	0	1	0	2	0	2	0	1	0	1	0
Age																
21-25	2	1	2	1	1	1	2	0	1	1	1	1	1	0	0	0
26-30	0	0	0	0	0	0	0	0	0	0	0	0	0	0	0	0
31-35	3	1	3	1	3	1	3	1	0	1	0	1	1	1	1	0
36-40	4	2	4	2	4	2	2	1	3	2	3	2	1	0	0	0
41-45	1	4	1	4	1	4	1	3	1	4	1	3	0	1	1	0
46-50	3	4	3	4	3	4	2	4	2	3	0	1	2	2	2	0
51-55	3	4	3	4	3	4	3	4	2	4	2	3	2	0	1	0
56-60	3	4	3	4	3	3	2	3	0	4	0	3	1	2	0	0
61-65	4	1	3	1	3	1	3	1	0	1	0	1	1	1	0	1
66-70+	5	1	4	1	3	1	3	1	1	1	0	0	1	0	1	0

[a]Expanded Foods and Nutrition Program homemakers.

[b]Home Demonstration Club homemakers.

TABLE 2 (continued)

Environmental Factors	Group		Can		Pickle		Jelly		Freeze		Cure		Dry		Bury	
	A[a]	B[b]	A	B	A	B	A	B	A	B	A	B	A	B	A	B
Educational Level																
0	2	0	2	0	2	0	2	0	0	0	0	0	1	0	1	0
1	1	0	1	0	1	0	1	0	0	0	1	0	0	0	0	0
2	1	0	1	0	1	0	0	0	0	0	0	0	0	0	0	0
3	1	0	1	0	1	0	1	0	1	0	0	0	1	0	0	0
4	6	0	4	0	4	0	4	0	2	0	1	0	3	0	2	0
5	3	0	3	0	3	0	2	0	1	0	0	0	0	0	0	0
6	1	0	1	0	0	0	1	0	0	0	0	0	1	0	0	0
7	4	0	4	0	4	0	4	0	1	0	1	0	2	0	1	0
8	8	1	8	1	7	1	6	1	4	1	3	1	2	0	2	0
9	1	1	1	1	1	1	0	1	1	1	1	1	0	1	0	0
10	0	0	0	0	0	0	0	0	0	0	0	0	0	0	0	0
11	0	0	0	0	0	0	0	0	0	0	0	0	0	0	0	0
12	0	15	0	15	0	15	0	13	0	14	0	10	0	4	0	1
13	0	2	0	2	0	2	0	2	0	2	0	1	0	2	0	0
14	0	2	0	2	0	1	0	1	0	2	0	1	0	0	0	0
15	0	2	0	1	0	1	0	0	0	1	0	1	0	0	0	0
Income																
-$1,000	10	1	9	1	8	1	7	1	2	1	1	1	4	1	1	0
1,000	8	3	7	3	7	3	7	3	2	2	2	1	2	1	2	0
2,000	2	0	2	0	2	0	1	0	2	0	1	0	0	1	1	0
3,000	5	1	5	1	4	1	3	1	2	1	2	1	2	1	1	0
4,000	1	1	1	1	1	1	1	0	1	1	1	1	0	1	0	0
5,000	0	0	0	0	0	0	0	0	0	0	0	0	0	0	0	0
6,000	1	0	1	0	1	0	1	0	0	0	0	0	1	0	0	0
7,000	0	2	0	2	0	2	0	2	0	2	0	2	0	1	0	1
8,000	0	3	0	3	0	3	0	2	0	3	0	2	0	1	0	0
9,000	1	2	1	2	1	2	1	2	1	2	0	1	0	0	1	0

TABLE 2 (continued)

Environmental Factors	Group		Can		Pickle		Jelly		Freeze		Cure		Dry		Bury	
	A[a]	B[a]	A	B	A	B	A	B	A	B	A	B	A	B	A	B
10-15,000	0	3	0	3	0	3	0	2	0	3	0	3	0	0	0	0
+15,000	0	6	0	6	0	5	0	4	0	6	0	3	0	1	0	0
Social Participation Score																
0	19	0	18	0	17	0	16	0	17	0	7	0	6	0	4	0
1	0	1	0	1	0	1	0	1	0	1	0	1	0	0	0	0
2	1	0	1	0	1	0	0	0	0	1	0	0	0	0	0	0
3	8	2	7	2	6	2	5	2	2	2	0	1	4	2	2	0
4	0	0	0	0	0	0	0	0	0	0	0	0	0	0	0	0
5	0	0	0	0	0	0	0	0	0	0	0	0	0	0	0	0
6	0	5	0	5	0	5	0	4	0	4	0	4	0	2	0	1
7	0	0	0	0	0	0	0	0	0	0	0	0	0	0	0	0
8	0	0	0	0	0	0	0	0	0	0	0	0	0	0	0	0
9	0	1	0	1	0	1	0	1	0	1	0	1	0	0	0	0
10	0	0	0	0	0	0	0	0	0	0	0	0	0	0	0	0
11	0	1	0	1	0	1	0	1	0	1	0	1	0	0	0	0
12	0	1	0	1	0	1	0	1	0	1	0	1	0	0	0	0
13	0	0	0	0	0	0	0	0	0	0	0	0	0	0	0	0
14	0	2	0	2	0	2	0	2	0	2	0	2	0	1	0	0
15	0	1	0	1	0	1	0	1	0	1	0	0	0	1	0	0
16	0	1	0	1	0	0	0	0	0	1	0	0	0	0	0	0
17	0	1	0	1	0	1	0	1	0	1	0	0	0	0	0	0
18	0	0	0	0	0	0	0	0	0	0	0	0	0	0	0	0
19	0	1	0	1	0	1	0	1	0	1	0	1	0	1	0	0
20	0	2	0	2	0	2	0	2	0	2	0	1	0	0	0	0
20+	0	3	0	3	0	3	0	1	0	3	0	2	0	0	0	0

TABLE 2 (continued)

Environmental Factors	Group A[a]	Group B[b]	Can A	Can B	Pickle A	Pickle B	Jelly A	Jelly B	Freeze A	Freeze B	Cure A	Cure B	Dry A	Dry B	Bury A	Bury B
Work																
Yes	0	11	0	11	0	10	0	8	0	11	0	7	0	4	0	1
No	28	11	26	11	24	11	21	10	10	10	7	8	10	3	6	0
Residence																
Open Country	26	16	24	16	22	16	19	15	9	15	6	12	9	6	6	1
Village	2	6	2	6	2	5	2	3	1	6	1	3	1	1	0	0
Stove																
Wood	6	1	5	1	5	1	4	1	2	1	2	1	1	1	2	0
Electric	21	21	20	21	18	20	17	17	8	20	5	14	8	6	4	1
Gas	1	0	1	0	1	0	0	0	0	0	0	0	1	0	0	0

APPENDIX C

TABLE 3

OBSERVATIONS AND QUOTATIONS DEMONSTRATING THE HOMEMAKERS' PRIDE IN THE QUANTITY OF FOODS PRESERVED

A. Amount needed to feed the family
"what we don't grow, we don't eat; three gardens; you do it, because there's nothing else to do"
"put-up whatever we can"
"takes a lot to feed all of us"
"got to keep ahead - don't know what might happen. This helps tide you over"
"have five people to feed - four men and myself"
"job that has to be done all year long"
"couldn't live without my garden"
"proud to be able to put-up so much food"
"don't know what people do who don't raise gardens"
Would like to use other preservation methods, but has no place to do and store it
Large garden
"can just about everything"
"put-up everything I can get"
"don't waste anything"
"Got into the habit of canning when we had field hands. Had to have a lot"
"put-up everything I can get my hands on"
"got to put-up a lot to feed this family"
"little of everything;" "127 half gallons of tomato juice!!"
Canned beans are major vegetable

B. Measurement of food supply
"have 200-300 cans - keep them full"
"two freezers full - empty now"
"put-up 300 jars"

C. Had preserved more in the past
"did more when children were home"
"don't do as much as I have"
"not as much needed now"
"don't do as much as others; did more when children were home; just don't need as much now; too busy to do much"

TABLE 3 (continued)

"not as much needed"
"just husband and I - have done more"
D. Grocery store inaccessibility
"just can't go to the store everytime I need something"
"can't just go to store anytime"
"don't see how people survive that have to buy everything"

TABLE 4

OBSERVATIONS AND QUOTATIONS DEMONSTRATING THE HOMEMAKERS' PRIDE IN THE QUALITY OF FOODS PRESERVED

Holes in corn cob - takes out cob flavor
"My son really likes my tomato juice!!
Broccoli - some people don't know what it is."
"pretty white kraut; not a seal broke"
"green tomato pickles - a little red makes them pretty"
Does a variety of foods; "Recently I've done more than ever before."
"white crisp kraut - water must be boiling"
"pretty kraut - stays white"
Kraut - "pretty and white;" "real brickle"
Granddaughter - "really likes sweet pickles"
Grandson - "broccoli is his favorite"
"no one can beat her apple butter"
"pretty as a pretty wash"
Tried various methods of pickles, but liked this one best
Beets - very proud of their flavor; told of another who had complimented her

TABLE 5

OBSERVATIONS AND QUOTATIONS DEMONSTRATING THE HOMEMAKERS' PRIDE IN TEACHING HER CHILDREN PRESERVATION SKILLS

"daughter helps some"
Included older girls in preservation and interview
Gives large amount of food to grown children

VITA

Doris Ellen Phillips, a native of Marion, Indiana, graduated from Marion High School in 1966. In June 1970 she received a Bachelor of Science degree from Purdue University, majoring in Home Economics with an emphasis in Foods in Business. For 2 years she served as an Area Extension Agent, specializing in food and nutrition, for the Cooperative Extension Service in LaPorte, Indiana.

In July 1972, she began Graduate School at the University of Tennessee, Knoxville. She served as a teaching assistant with full classroom responsibilities for four quarters. Ms. Phillips received the Master of Science degree with a major in Food Science in December 1973. She is a member of the American Home Economics Association.