To the Graduate Council:

I am submitting herewith a thesis written by Richard A. Todd entitled "Guidelines For Small-Scale Production of Thick-Film Hybrid Microcircuits." I recommend that it be accepted in partial fulfillment of the requirements for the degree of Master of Science, with a major in Electrical Engineering.

Eldridge J. Kennedy, Major Professor

We have read this thesis
and recommend its acceptance:

J. Vaughn Blalock

Walter L. Green

Accepted for the Council:

Hilton A. Smith
Vice Chancellor
Graduate Studies and Research

GUIDELINES FOR SMALL-SCALE PRODUCTION OF THICK-FILM HYBRID MICROCIRCUITS

A Thesis

Presented for the

Master of Science

Degree

The University of Tennessee

Richard Allen Todd

June 1975

ACKNOWLEDGMENTS

This work was performed under Union Carbide Corporation Subcontract Number 3961 between Oak Ridge National Laboratory and The University of Tennessee. The processing of all microcircuits was performed in the Electrical Engineering Department Thick-Film Hybrid Laboratory.

The author is particularly indebted to his major professor, Dr. E. J. Kennedy, for his advice and encouragement in the work and writing of this thesis.

The author also acknowledges the assistance of Mr. C. H. Tucker in the development of a screen making process.

Special thanks are due to Susan Todd for her help in typing the rough draft of this thesis, and a note of appreciation is due Mrs. Debbie Lenarduzzi for skillfully and patiently typing the final copy.

1207528

ABSTRACT

Design guidelines and small scale production techniques for thick film hybrid microcircuits are presented. These results were obtained in the first phase of a development program to acquire prototype production capability. The study includes an evaluation of (commercially available) conductor and resistor inks. Tests were conducted to determine the effect of printing parameters such as squeegee hardness, squeegee pressure, snapoff, and ink viscosity on print thickness. Apparent resistivity as a function of resistor width and geometry is also presented. Following the design guidelines and fabrication techniques acquired, a high-frequency current-pulse amplifier was constructed using the thick film hybrid process. The hybrid design improved the rise time of the amplifier from 2.4 nanoseconds to 1.0 nanosecond due to fewer parasitic capacitances and less lead inductance.

TABLE OF CONTENTS

CHAPTER		PAGE
I	THICK-FILM MICROELECTRONICS	1
	Introduction	1
	The production of thick-film hybrid microcircuits - an overview	2
	Layout	2
	Photographic reduction	2
	Screen development	3
	The screening process	3
	Firing, trimming, and bonding	3
II	LAYOUT GUIDELINES	5
	Conductor guidelines	7
	Crossovers	10
	Resistors	11
	Chips	14
III	PHOTOGRAPHY AND SCREEN PREPARATION	16
	Photographic reduction of mylar masters	16
	Screen fabrication	17
IV	THE SCREEN PRINTING PROCESS	22
	The screen	23
	The printer	24
	The substrate	25
	The squeegee	26

CHAPTER		PAGE
V	THICK FILM EQUIPMENT.	28
	The firing cycle.	28
	Resistors trimmers.	29
	Wire bonding.	31
VI	TEST AND EVALUATION OF INKS	33
	Conductor mask.	33
	Resistor mask	38
	Apparent resistivity.	38
	Resistor ink tests.	38
	Conductor thickness	39
	Printer variable test	47
	Resistor width.	54
	Temperature coefficient of resistance (TCR)	54
VII	EXAMPLE OF A PRACTICAL CIRCUIT CONSTRUCTION	58
	Layout considerations	62
LIST OF REFERENCES.		72
VITA.		76

LIST OF TABLES

TABLE		PAGE
3.1	Typical Tensions for Stainless Steel Mesh Screens.	19
6.1	Resistor Dimensions for TF-01 Test Pattern of Figure 6.2	36
6.2	Test Pattern Results for Thick Film Systems Inks	40
6.3	Test Pattern Results for Dupont Birox 1400 - Series Ink.	42
6.4	Test Pattern Results for Engelhard Inks.	44
6.5	Screen Printer Settings Used to Study Effects on Apparent Resistivity.	48
6.6	Average Apparent Resistivity of Resistors R15-R19 of the TF-01 Test Pattern for TFS and Dupont Birox Inks . . .	52
6.7	Temperature Coefficient of Resistance of Dupont Birox Inks Tested From 25-65°C Given in Parts Per Million Per °C	57
7.1	Resistor Area Required for Fast Amp Circuit.	64
7.2	Hybrid Component List for High Frequency Amplifier	66
7.3	Fabrication Steps for Hybrid Amplifier Example	70

LIST OF FIGURES

FIGURE		PAGE
2.1	Typical Dimensions for Single Layer Layout.	8
2.2	Typical Dimensions for Multilayer Layout.	9
2.3	An Example of the Geometric End Effect of Thick-Film Resistors.	12
2.4	Termination Resistance Shown as the Extrapolated Curve of Resistance Versus Aspect Ratio	13
2.5	Typical Chips Attached to Thick-Film Hybrid Circuits. (a) Transistor Chip, Motorola No. MMCS-3904-1. (b) Diode Chip, Motorola No. MMCD914-1. (c) CMOS IC Chip, RCA No. CD4046AH. (d) .01μF Capacitor, USCC. . . .	15
6.1	Conductor Master for Test Pattern	34
6.2	Resistor Master for Test Pattern.	35
6.3	Print Thickness of Dupont 9071 Palladium-Silver Conductor Versus Squeegee Deflection.	46
6.4	Conductor Thickness Measurement	47
6.5	Effect of Squeegee Hardness on Apparent Resistivity . . .	49
6.6	Effect of Snapoff Distance in Apparent Resistivity With Constant Screen Tension = 40 Mils and Squeegee Durometer = 70.	51
6.7	Effect of Adding Two Drops Thinner to One Half Ounce Quantity of Ink Snapoff = 30, Durometer = 70 and Screen Tension = 40	53
6.8	Apparent Resistivity of 100-Mil-Long TFS Resistors Normalized to the 30-Mil-Wide Value	55
6.9	Apparent Resistivity of 100-Mil-Long Dupont Resistors Normalized to the 30-Mil-Wide Value	56
7.1	High Frequency Amplifier Circuit.	59
7.2	Comparison of Thick-Film Hybrid Step Response to the Discrete Response. (a) Thick-Film Hybrid Step Response (1 nsec/div). (b) Discrete Step Response (1 nsec/div).	60

FIGURE PAGE

7.3 Comparison of Thick-Film Hybrid Waveform to the Discrete Waveform. (a) Thick-Film Hybrid Waveform (5 nsec/div). (b) Discrete Circuit Waveform (5 nsec/div). 61

7.4 Overload Protection Circuit 63

7.5 First Pencil Layout of High-Frequency Amplifier 67

7.6 The Five Layers of the Hybrid Circuit. (a) First Metallization. (b) Crossover. (c) Second Metallization. (d) 1KΩ/□ Ink. (e) 100Ω/□ Ink. 69

7.7 Photograph of Completed Hybrid Amplifier With the Package Lid Removed 71

CHAPTER I

THICK-FILM MICROELECTRONICS

I. INTRODUCTION

The advancement of electronics has been paralleled by a miniaturization of components. With the advent of monolithic technology, complex digital functions have been realized in chip form replacing myriad arrays of transistors, diodes, and resistors. Linear circuits as well have been constructed using monolithic techniques. These break-throughs in silicon monolithic technology have, however, been accompanied by a set of limitations. The tooling costs incurred in the fabrication of these circuits encourage large scale production so that the cost per item is low. Further, the cost of furnishing and operating a reasonable size monolithic facility is greater than $500,000 [1]. Thus, there has been an increased interest in finding an in-house process that has the inherent advantages of monolithic technology at a price low enough to encourage prototype and small scale production.

Thick-film hybrid microcircuits have found widespread acceptance in this regard. They offer a wider range of resistor values, greater power dissipation capabilities, and a much lower cost for small scale production (this can be as low as $30,000 to $60,000) than do monolithic processes. As opposed to printed circuit fabrication where each component is individually packaged, hybrid components are mounted, connected, and then packaged thereby reducing excess volume and lowering

parasitic capacitances and lead inductances. By epoxy-mounting active devices and chip capacitors along with thick film passive devices, hybrid circuits can be tailored to meet a wide range of circuit requirements.

The production of thick-film hybrid microcircuits - an overview. The thick film circuit fabrication evolves through a step by step process beginning with a working circuit model that has been built and tested in discrete form. It is imperative that the circuit be operable in discrete form because design changes are much more easily made at this stage of production.

Layout. Once the circuit has been finalized, the hybrid designer can begin his layout. A rule-of-thumb calculation for the area needed is often stated as five times the sum of resistor, capacitor and chip areas required [2]. Before actually laying out the circuit, the substrate and package sizes are tentatively chosen. Restraints such as pin configurations and the importance of ground planes or length of feedback paths must be acknowledged. Attached circuit components must be available in chip form. Observing layout guidelines closely, the designer can then complete his multilayer design. From there it is transferred to a clear mylar sheet using red mylar tape at 10X or 20X scale; an alternative cut-and-peel technique with a two layer Rubylith mylar sheet is often used.

Photographic reduction. With the camera available in this research, the maximum two step reduction possible was 25X. (With a

different lens, it is possible for a 50X to 100X reduction, but this was not needed.) By photographically reducing the mylar master to actual size in two steps, the positive image is retained.

Screen development. Screens are made using either stainless steel wire mesh, or a nylon monofilament mesh, whose wire diameter is between one and two mils; screens should be properly tensioned before they are prepared with a light-sensitive emulsion coating. By illuminating the sensitized screen with the full size positive on it, the emulsion is polymerized everywhere on the screen except underneath the pattern. The unexposed emulsion washes out readily with water. These "windows" that have just been opened will allow a fixed pattern of conductor or resistor ink to be transferred from screen to substrate.

The screening process. The screening process is a function of many variables including screen tension, the distance from screen-to-substrate (hereafter referred to as snapoff distance), squeegee speed, ink viscosity, and printing force. The basic idea is that a repeatable amount of paste is transferred from the screen to the substrate through the apertures in the screen mesh coating. Once the substrate has been screen printed, the ink must be allowed to settle for ten to twenty minutes to level out the wire mesh patterns. It is then prefired at 100-200°C. to evaporate most of the paste solvent and to facilitate handling.

Firing, trimming, and bonding. The substrate is then placed on the furnace belt and processed through the furnace at a peak temperature of 750-950°C. for a firing time of twenty-five to sixty minutes. Oven

profiles for each brand of ink are approximated for initial setups. After screening and firing all layers of conductor, crossover, capacitor, and resistor inks, the resistors can be trimmed to better than one percent tolerance, if required, in a quick automated operation using either abrasive or laser trimmers. Capacitor, transistor, and diode chips are then mounted using special epoxies. Wire bonding between the chips and substrate can be done before or after packaging the substrate. Leads are likewise connected to termination pads on the substrate by wire bonding, soldering, or epoxy. The circuit is ready for testing after attaching all outboarded connectors or components.

The above description was intended to give the reader a short overview of the thick-film process. The following chapters will present a more detailed examination of each of the above steps involved in thick-film production.

The second chapter deals with layout guidelines. Chapter III looks at the photography and steps in screen-making. Chapter IV discusses the screen printing process itself. Chapter V ties together the firing, trimming, and bonding processes. Laboratory testing of various thick-film inks is presented in Chapter VI, and Chapter VII shows a practical example of thick-film hybrid construction and its advantages over discrete circuit fabrication in a high-frequency circuit.

CHAPTER II

LAYOUT GUIDELINES

Design of hybrid circuits requires a knowledge of the fabrication procedure and its limitations. The guidelines set forth in this chapter reflect the limitations of the screen printing process and the characteristics of the thick film inks. These rules are intended to upgrade the quality of the end product by setting minimum tolerances on component dimensions and spacings.

There are three main types of thick film pastes: conductor, resistor, and dielectric pastes. Conductor inks containing gold, silver, palladium-silver, and platinum-silver metallurgies vary in cost and performance. The bulk resistivity of fired resistor inks is specified by the manufacturer and depends somewhat on the termination material used. It is common to use two or three different resistor pastes on one substrate to produce a wide spread of values with a minimum area. A preliminary evaluation of resistor inks should be undertaken before resistor sizes can be determined. The dielectric materials are used for crossover purposes and for making capacitors. A low-K dielectric material of nine to twelve is generally used for crossovers and for NPO capacitors; dielectric values range to a K of five hundred to five thousand for larger capacitor values.

A thick film layout begins with a working circuit that has been built and tested in discrete form. If possible, this circuit should be adapted for thick film by reducing the size and number of large

capacitors and reducing resistor spreads so that a maximum of three inks is required. When the circuit schematic has been finalized, a parts list should be prepared. Note on the circuit diagram what points are to be brought outside the package (generally referred to as "pinned out") and what, if any, components are to be external to the package. A list of all circuit chips, transistors, diodes, resistors, and capacitors should include the component type and tolerance as well as the dimensions (a typical work sheet is presented later in the thesis as shown on page 66). A rough estimate often used for the substrate area needed is five times the sum of the individual areas required. With the area estimated, a substrate and package size can then be tentatively chosen. Package leads may be soldered, epoxied, or wire bonded to pads on the substrate. A soldered or epoxied lead usually requires more area than a bonded lead pad, so the type of attachment will affect the pad size.

The scale used for layout depends primarily on the fine line resolution required in the circuit. Ten-times scale is adequate when laying out ten-to-fifteen mil (one mil = 0.001 inch) line widths, however, if the circuit requires five mil lines, a 20X scale should be used. Clear gridded mylar facilities layout and can be used with excellent results on a light table. The best accuracy obtained in layout is achieved by using a two-layer mylar sheet composed of a red sheet and a clear sheet, referred to as Rubylith. With this material, a cut-and-peel technique will produce red and clear areas. This latter technique is more expensive to implement as it normally requires the

use of a co-ordinograph table [3]. Other layout tools include a straight edge, a sharp Exacto knife, and a set of red mylar tape. For best resolution, each edge of the pattern could be cut instead of relying on factory edges for straight lines. Overlapping several small pieces of tape is less desirable than trimming a wider piece to form. It is important to note that the care taken in transferring the paper design to the mylar master layout will directly affect the precision of the final product.

Conductor guidelines. Conductor material forms the interconnection pattern for thick film resistors and attached components. For best use of the available area, all conductors and resistors should be parallel to the substrate edges. Registration marks in opposite corners act as guides in lining up second and subsequent layers. Registration marks such as boxes can align screens well within one mil with the use of a small eyepiece when setting up the printer. An effort should be made to reduce the number of crossovers needed.

Shown in Figures 2.1 and 2.2 are typical dimensions and spacings used in thick film layout. Much of these layout guidelines are taken from the excellent NASA publication, Layout Guidelines for Thick Film Hybrid Microcircuits [4]. As shown, ten mil line widths are considered minimum unless used as a ground plane or power bus. Five mil widths are feasible over a short distance if using a fine line palladium-silver or gold conductor ink, but these should not be extended for more than 100 mils. There is no need to risk low yields if a wider conductor path can be used.

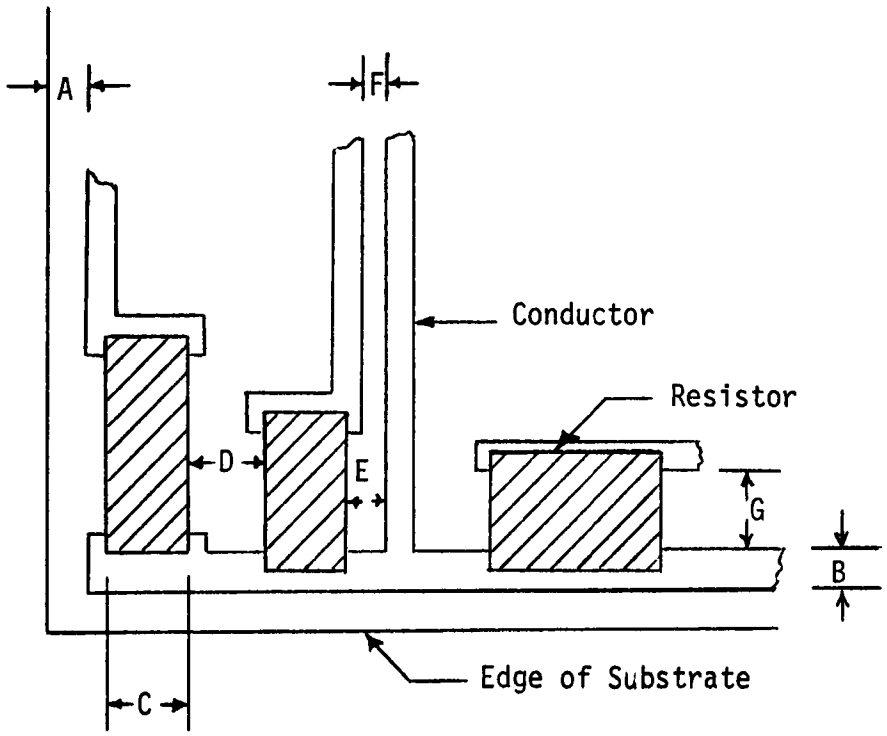

DIMENSION[1]	A[2]	B	C	D[3]	E	F	G
PREFERRED	20	10-20	40-100	40	15	10	40-300
MINIMUM	10	5	30	30	10	8	30

NOTE: 1. Dimensions in Mils.

2. Distance From Conductor to Substrate Edge.

3. Clearance Next to Resistor to be Trimmed.

Figure 2.1

Typical Dimensions for Single Layer Layout.

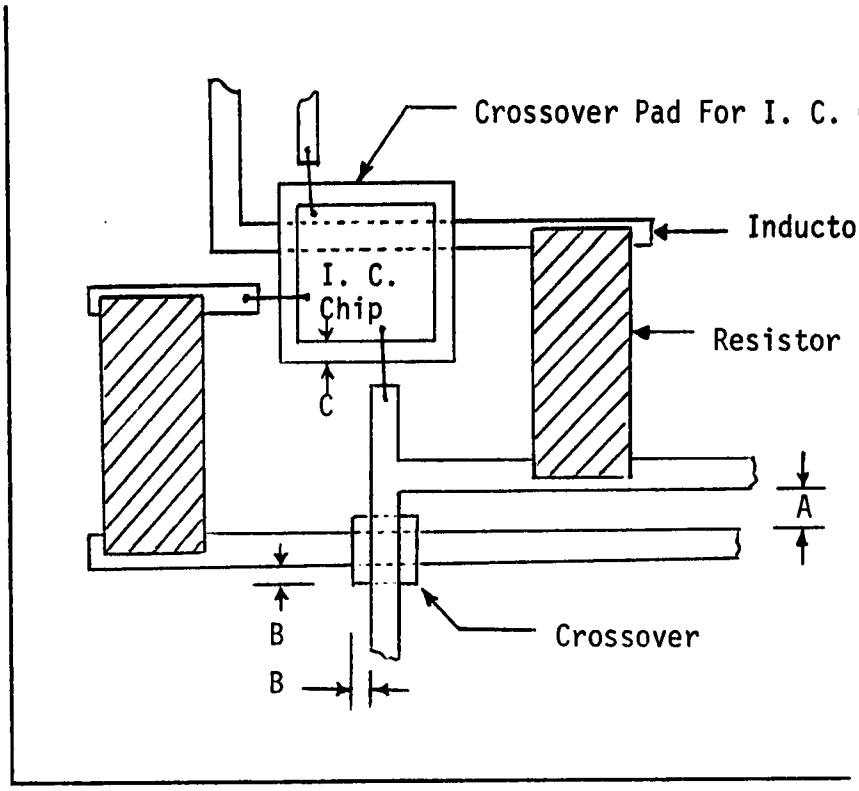

DIMENSION[1]	A[2]	B	C
PREFERRED	20	15	10
MINIMUM	15	10	5

NOTE: 1. Dimensions in Mils.

2. Spacing for Conductors of Different Layers.

Figure 2.2

Typical Dimensions for Multilayer Layout.

Crossovers. Crossover materials allow metallization paths to cross without shorting together. To insure against pinholes, crossover masks are double-screened. Some crossovers must be screened, predried, and fired before double screening. Others, depending on manufacturer's specifications, can be screened and merely prefired before screening again. In some instances, the top metallization can be added before firing. Fired thicknesses of crossovers vary from 0.8 mil to 1.5 mils thick. Dielectric materials used for crossovers are usually of low K values (nine to twelve), whereas dielectrics used in making thick film capacitors range upwards from a K of five hundred. Thick film capacitors require more substrate area than available chip capacitors and are impractical for most applications, with the exception of capacitors less than 300pF [5].

Dielectric materials can be used very successfully in multilayer circuitry. Via holes or openings in the crossover plane allow interconnection of conductors between the layers. Fifteen mil vias are possible; however, most openings should be at least 20 mils square to insure contact [6].

The largest problem encountered in this research involving dielectric materials was their tendency to form sharp edges that the second metallization had to climb to cross. Problems arose when the second metallization would print well on the flat areas and on top of the dielectric material, but would not connect at the base of the crossover pad. Ideal crossovers have a smooth ramp up at the edge of the pads to allow the next conductors to print evenly.

Resistors. The basic equation for resistor value is idealized to the case of a rectangular solid. For a resistor of length L, width W, and thickness T, the resistance R is

$$R = \frac{\rho L}{WT} = \frac{\rho L}{A} \tag{2.1}$$

where ρ is the bulk resistivity of the ink. If thickness can be considered a constant, a new variable called sheet resistivity, ρ_s, can be defined where $\rho_s = \rho/T$. Thus, from Equation (2.1),

$$R = \rho_s \cdot \frac{L}{W} = \rho_s \cdot N \tag{2.2}$$

where N is equal to the aspect ratio (or number of squares) of the resistor. Sheet resistivity as specified by an ink manufacturer depends on his specified thickness as well as his firing profile and conductor material used. Since these things will vary with each thick film facility, it is absolutely essential to conduct an evaluation program for each ink to discern the sheet resistivity and end effects resulting with one's own equipment and processing conditions.

Resistor values are only approximated by the idealized case. The apparent resistivity, defined as the actual measured resistance divided by the aspect ratio of the resistor, will vary from the sheet resistivity due to geometric and intrinsic effects. The geometric effect can be seen in Figure 2.3 as the additional ink above the

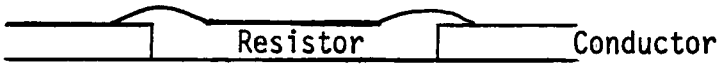

Figure 2.3

An Example of the Geometric End Effect of Thick-Film Resistors.

conductor plateau that decreases the end resistance, or in effect provides an additional shunting path for some small distance from conductor to resistor. These end areas are susceptible to diffusion of metal particles from the conductor pads into the resistor, thus appreciably lowering the sheet resistivity of the end material. In like manner, metal from the resistor composition can be depleted into the conductor depending on the density gradient and mobility factor associated with the two materials.

Accounting for both the geometric and intrinsic end effects, Engelhard engineers have plotted resistance as a function of the number of squares for a fixed width (100 mils) resistor [7]. By extrapolating the curve to zero number of squares, they define the Y-axis intercept as the termination resistance as shown in Figure 2.4. They relate the resistance R to the termination resistance R_t as

$$R = R_t + V \cdot N \qquad (2.3)$$

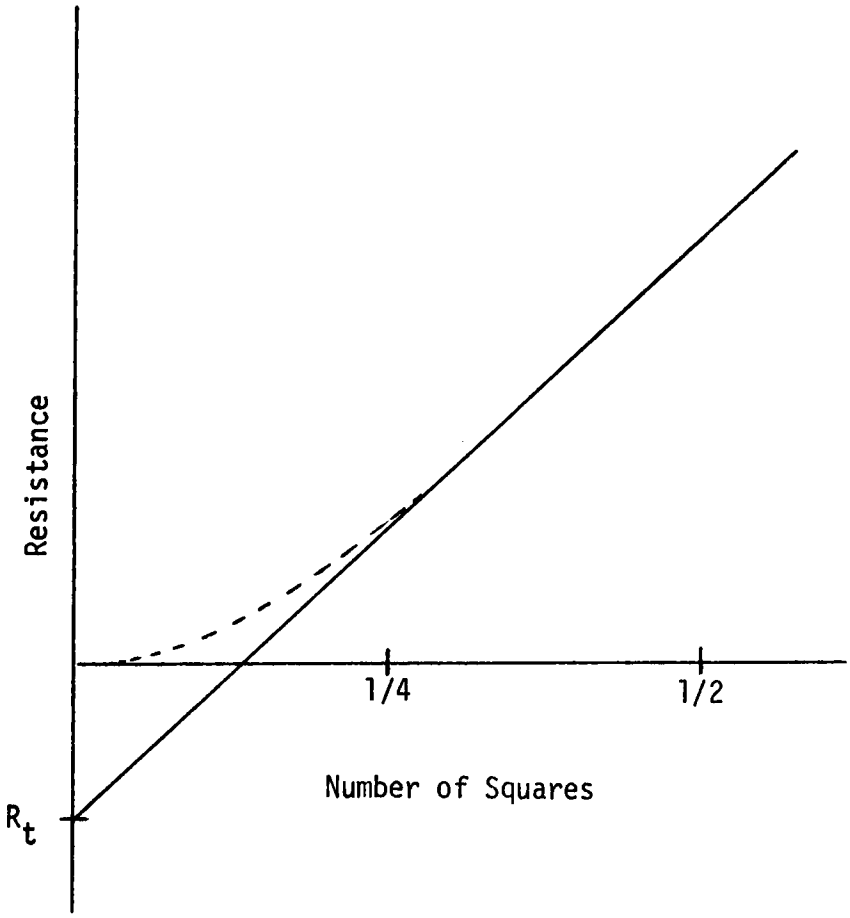

Figure 2.4

Termination Resistance Shown as the Extrapolated Curve of Resistance Versus Aspect Ratio.

where V is equal to the sheet resistivity in ohms per square and N is any number of squares.

Chips. When designing the thick film layout, it is necessary to choose and catalog the chip components to be attached. Each dimension and lead configuration should be noted and incorporated in the design. Some typical chips are shown in Figure 2.5 including diodes, transistors, capacitors, and integrated circuits. Most attached components vary in size from 10 to 100 mils per side. Silicon monolithic chips are usually less than 10 mils thick whereas ceramic capacitor chips are typically 30 to 50 mils thick. In all cases it is necessary to ascertain the availability of added components and to make acceptable substitutions if required.

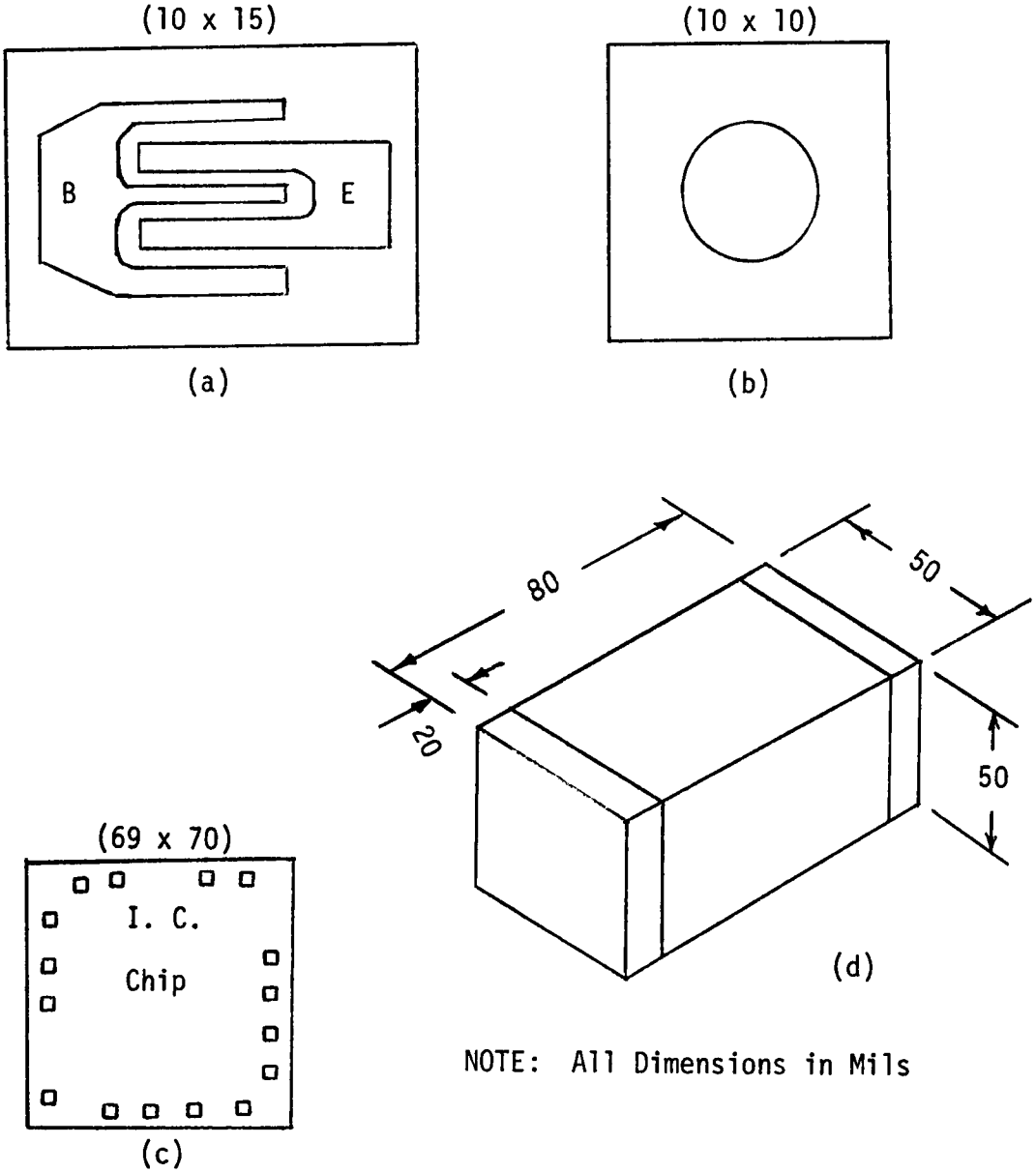

Figure 2.5

Typical Chips Attached to Thick-Film Hybrid Circuits.
(a) Transistor Chip, Motorola No. MMCS-3904-1.
(b) Diode Chip, Motorola No. MMCD914-1.
(c) CMOS IC Chip, RCA No. CD4046AH.
(d) .01 μF Capacitor, USCC.

CHAPTER III

PHOTOGRAPHY AND SCREEN PREPARATION

Most of the literature dealing with screen printing discusses how variations in parameters such as screen tension, squeegee pressure, etcetera affect resistivity or fine line capability. These second-order problems arrive after an in-house facility has mastered the knack of screen making. This chapter will try to bridge the gap between the layout and screen printing step by outlining in detail the pertinent steps of screen making.

Photographic reduction of mylar masters. After the mylar masters have been finished, it is necessary to reduce them photographically by a factor of 10X or 20X scale. For line widths greater than 10 mils, a 10X scale is usually adequate; however, fine line resolution of less than 10 mils requires at least a 20X scale initial layout. The photographic reduction must be made in two steps so that the full size photoplate is a "positive". In this research, two types of photographic film were used. The first reduction was to a mylar-backed film while the second used glass slides. Glass plates are ideal for the final reduction because of their long term dimensional stability and extremely flat surface for good contact prints with the sensitized screen. Also, and most importantly, they avoid the problem of trapped dust particles between a mylar film and a clear plate glass to which the film must be attached for screen exposure. In this setup, Kodak

high-resolution glass plates, (Type 1, Kodak catalog number 140 6461) are used with a small lens aperture (typically f11 to f22) and an exposure time of six minutes to a backlighted copyboard. The plates are developed under a red safelight with Kodak DK-60a developer at 75°F. for approximately three and one half minutes and then rinsed in water before being placed in a Kodak fix. Developing speed is highly proportional to developer temperature. Underdeveloped film appears darker on the emulsion side when developing, and both sides of the image should have the same constant tone before removing. Overdeveloped film loses the crisp resolution and appears fuzzy around the image boundaries. Plateaus should be run to select exposure and developing times beginning with the manufacturer's suggested settings. The importance of operating in a clean, dust-free environment cannot be overemphasized as any foreign material will show up in the form of screen pinholes in the final product. Perhaps a better type of glass plate for this application would have been the Kodak Ortho Plate, PFO, (Kodak catalog number 160 0006), which processes faster; however, these were not available at the time of this work.

Screen fabrication. There are four types of screens currently used: the indirect, the direct, the hybrid, and metallic [8,9]. The indirect stencil is fabricated by exposing the sensitized emulsion film on its mylar carrier and then applying the wet film to the mesh where it dries. The direct stencil is made by applying a liquid emulsion directly to the mesh, allowing it to dry, and then exposing the sensitized screen. The hybrid (or indirect-direct) screen is made

by sensitizing the emulsion film on the screen and then processing as with a direct stencil. The hybrid stencil combines the durability of the direct stencil with the excellent detail and controlled thickness of the indirect method. There are two types of metal masks that have great potential for fine line printing. One is simply an etched metal foil bonded to a regular stainless steel mesh. The second involves etching the pattern on one side of the metal foil and etching the mesh pattern on the reverse side. Metal masks are normally used for contact printing.

Screen mesh tension has a direct bearing on printing force and repeatability of resistor values from screen to screen. Thus, the first step of screen making is to tension the screen mesh properly. Screen tension is usually measured by applying a one pound weight to the center of a screen and measuring the resulting deflection in mils. Table 3.1 shows typical initial tensions for stainless steel screens [10].

When using new screens, it is extremely important to scrub them thoroughly to eliminate any oil or dust residue left from manufacturing. Emulsion patterns will pull away from an oily screen and dust can clog via holes. Wash the screen with stainless steel mesh cleaner [11] at full strength using a brass brush (suede brush) [12]. Liberally coat the substrate side of the screen with the mesh cleaner and scrub parallel to the mesh from all sides and then at a 45° angle. Flip over to the squeegee side and repeat. When the oil residue is removed, the mesh cleaner will lather somewhat. If necessary, rinse the screen with a water spray and repeat the scrubbing step until the screen lathers.

Table 3.1

Typical Tensions for Stainless Steel Mesh Screens

Mesh Count	Wire Diameter in μm	Mesh Opening in μm	Deflection in mils (5" x 5" frame)
185	45	100	35
200	40	86	38
235	35	71	40
325	30	51	45

Let the screen set for two minutes, then rinse thoroughly and dry. Invariably, the most significant loss of tension during the life of a screen can be attributed to the cleaning cycle [13]. Before the emulsion is applied to the newly-cleaned screen, it is essential to recheck the mesh tension and adjust if necessary. If starting with previously used screens, follow the manufacturer's directions for removal of emulsion using an emulsion remover such as IDC-36 [14]. Rinse thoroughly and proceed as with a new screen.

The screens are now ready for the application of an emulsion film, the next step in the screen fabrication process. Screens were made in this research using Chromaline Screen Emulsion Kit [15], type B-150 which is a one and one half mil thick "hybrid" emulsion film. Upon receiving the kit, the film was cut into four inch squares and stored in polybags to reduce the problem of dust contamination.

Directions on the package were followed for mixing the sensitizer. Each time screens are made, a small batch of liquid emulsion must be sensitized. For a set of six screens, two milliliter sensitizer and ten milliliter liquid emulsion is sufficient and will last all day without hardening. All of this work must be done under yellow light until after the screen has been developed.

To prepare the emulsified screen for illumination, the film is laid emulsion side up on a precision flat surface, such as a machined steel block, and the cleaned screen is placed substrate side down and centered over the film. Along one side of the screen a liberal path of sensitized liquid emulsion is deposited about one inch from the inside frame edge. The rounded edge of the Direct Emulsion Scoop Coater [16] is now used to pull the emulsion across the screen with little pressure. This should give a nice, smooth surface. After a settling time of ten to twenty seconds a second and final pass with the squeegee is made using its blunt end and applying firm, constant pressure. Any excess emulsion is removed from the screen edge. With the sensitized screen in an upright position, it is then dried thoroughly with a blower fan.

After drying, the clear mylar carrier of the emulsion film is peeled from the substrate side of the screen, and the photo-positive is placed with its emulsion side next to the substrate side of the sensitized screen. An illumination for five minutes with a number one photoflood light at a distance of eleven to fourteen inches has proven to be sufficient exposure time. This illumination polymerizes the

exposed area so that the area not exposed will wash out with warm water. With both sides of the screen wetted, the edge of the emulsion should be rubbed along the squeegee side of the screen with the forefingers to dissolve the unexposed excess emulsion until only the texture of the mesh can be felt (keep water running over the screen during the process). Next, the pattern is washed out from the substrate side using moderate pressure and a fine spray. If the spray is from the squeegee side of the screen, it will possibly dislodge the emulsion from the screen mesh.

There is a certain element of trail and error or "art" involved in this phase of microcircuit fabrication. Inspection of the screens with an eyepiece will locate any pinholes in the emulsion and will make sure that all openings are clear and that none of the pattern washed out. It is possible to repair small pinholes or breaks in the finished emulsion by dabbing the openings with a touch of liquid emulsion (using a fine brush) and exposing to ultraviolet light. After the screens have been dried with circulating air, they are ready for printing.

CHAPTER IV

THE SCREEN PRINTING PROCESS

The screen printing process itself involves many well-known variables that have been enumerated to a certain extent in virtually every treatise on paste transfer. The major underlying motives have been to predict and control resistor characteristics and to improve upon the fine-line and multilayer capabilities to increase circuit densities. It is the purpose of this chapter to reiterate what has been learned about the more important of these parameters and their effects on the printing process. Topics to be considered will be the screen, the printer, the substrate, and the squeegee.

The screen printing process is the transfer of paste through openings in the emulsion-coated wire mesh onto a flat ceramic substrate. As the squeegee pushes the ink across the screen, it presses the screen down into contact with the substrate. The squeegee force causes the thixotropic ink to become less viscous and to wet the surface of the substrate directly under the screen opening. As the squeegee passes the window, the wire mesh snaps up leaving the paste on the substrate. The paste will level out but will not flow where the substrate surface has not been wetted. Screen mesh marks will level out leaving a smooth, glassy finish. After settling for ten to twenty minutes, the substrate is prefired in an air-circulating oven (or even a hot plate) at 100 - 200°C. This drives off most of the organic

vehicle from the paste and leaves a dried film that is ready to be fired in the oven. At this point, if an instrument for measuring film thickness is available, one can obtain the screened thickness of the ink and adjust the screen printer parameters if necessary.

The screen. The image transferred to the substrate can be no better than that recorded in the screen emulsion. Thus, the development process in making screens is an important factor in the line resolution obtainable. The inherent precision obtainable by metal masks promised to circumvent this resolution problem [17], but due to its inability to conform to irregular surfaces, metal masks are impractical for multilayer applications [18]. Plastic or gelatin emulsion coatings applied to woven mesh materials have proven to be the industry standard. Typical emulsion thicknesses range from one mil to two mils thick. Studies have shown that the thickness of the emulsion screen may be affected by the solvent used to clean the screen [19]. Emulsion thickness directly affects the printed thickness of the ink, so tight tolerances must be required of the screen thickness in order to expect consistency in resistor values.

The screen tension directly affects the printing force [20]. When the screen is deflected, the vertical force against the squeegee is the sum of the printing force against the substrate and the upward force of the screen mesh. If the snapoff distance and squeegee force are fixed, then the printing force is primarily dependent on screen tension. Variations in printing force exist as a function of the

squeegee location; however, no significant effect has been discerned as long as the squeegee blade stroke starts and ends at least one inch from all edges of the substrate without getting closer than one inch to the inside frame edge [21]. As with emulsion thickness, the important thing about screen tension is to keep it constant from run to run once the optimum has been determined.

Recent fine line improvement has been accomplished by a pattern orientation of 30° - 45° with respect to the mesh alignment. When the line width of a conductor approaches the mesh size of the screen, it is conceivable that the wire diameter could significantly reduce the amount of ink transferred to the substrate. The fine line patterns require higher mesh count so that emulsion blocking of mesh openings is less significant, and they require smaller wire diameter so that the percentage of open area remains near 40%. Typical stainless steel mesh size used for fine line printing is three hundred twenty-five to four hundred lines per inch.

The printer. The printer itself is the mechanism that holds the substrate, screen, and squeegee travel in parallelity during the screening operation. The initial mounting of the screen can result in uneven prints if one side is higher than another, thus some method of loading the screen level with the substrate holder must be followed. Adjustments are present on screen printers to align the substrate and screen by movement in the X and Y directions or by rotating one with respect to the other. Since substrates differ slightly in size, each

was consistently placed against the top right hand corner of the vacuum hold-down chuck. This insured repeatable alignment on subsequent layers. The snapoff distance is defined as the distance from the substrate top surface to the bottom of the screen. In the initial setup to find proper snapoff settings, a range of 24 mils to 39 mils was chosen. The printer used had a hand-held squeegee with squeegee force determined by the compression of a spring. The spring compression in mils was referenced to the zero deflection point of the screen which was ascertained in a crude (but reliable) method of lifting the squeegee and listening for the "twang" of the tensioned screen. Thus the zero point of compression could be determined within ±1 mil. A micrometer handle was systematically turned increasing pressure at each snapoff setting. Using a 1KΩ/□ ink, the apparent resistivity of each setting was recorded in a matrix of snapoff versus squeegee deflection. From this data, two trends became apparent:

1. Higher snapoff gives a tighter grouping--that is, less variation in resistance values.
2. There is a strong relationship between resistivity and the direction of squeegee travel; i.e. whether the resistor printed was perpendicular or parallel to squeegee motion.

The substrate. Variations in substrate thickness of ±3 mils as commonly specified by manufacturers will affect the apparent snapoff distance and will influence the printing force between the screen and the substrate [22]. Hamer and Biggers [23] report that a variation in

snapoff could change the resistance of a thick film resistor as much as 1%/mil of snapoff variation. Thus, the allowed substrate tolerances could account for a ±3% spread in resistor values. In addition, the surface texture affects the proportion of ink that is transferred from screen to substrate. Because of this, the substrate surface must be ultraclean and free of all fingerprints, waterspots, and dust. If the edge of the substrate is much higher than the surrounding stage, a coining effect will produce irregular prints around the substrate edge. For this reason, the vacuum hold-down chuck should be milled out so that the printing surface is no more than five mils above the stage level.

The squeegee. The primary variables of screen printing involving the squeegee are the squeegee force, the angle of attack, the squeegee hardness, and the squeegee speed. For most thick film inks, the ink viscosity is reduced when pressure is applied [24]. This phenomena allows the ink to remain above the screen mesh opening until the squeegee presses it in contact with the substrate at which time the ink flows against the boundaries of the emulsion pattern and remains on the substrate as the wire mesh is snapped upward. It has been stated that increasing the squeegee force will increase the amount of ink printed on the substrate. This is attributed to (1) the ink becoming less viscous and not clinging to the mesh as readily and (2) the squeegee blade deforming so that the angle of attack at the screen/blade interface is decreased causing a thicker ink deposition [25].

However, the author found somewhat contradictory results as stated later in Chapter V.

The paste adheres to all surfaces it touches, even to the wire mesh and to the sides of the emulsion in the pattern opening [26]. Edge effects are therefore much more pronounced on narrow patterns because the reduced ink transfer is a higher proportion of the total volume. Squeegee hardness directly affects the cross-section of squeegee area in contact with the screen and in this regard is proportional to printing pressure. "Hard squeegees (80-90 durometers) are said to maintain a constant angle of attack...and have a longer life. Soft squeegees conform to irregular printing surfaces more readily but have a shorter life [27]."

Squeegee speed was also shown to affect print thickness. As the linear speed of the squeegee was increased from two inches per second to eight inches per second, the mean resistance decreased and the resistor spread showed a tighter grouping [28].

CHAPTER V

THICK FILM EQUIPMENT

A thick film facility for limited or prototype production can be equipped suitably with a comparatively small capital investment. The equipment needed includes a screen printer, a belt furnace or box oven, a resistor trimmer, and a wire bonder. This chapter will briefly discuss each item of equipment used with the exception of the screen printer which was described in the previous chapter.

The firing cycle. The firing cycle is as important in determining the final characteristics of thick film inks as is the screening process. The peak temperature as well as the rate of heating and cooling the substrate can affect the peel strength and solderability of conductors and can affect the temperature coefficient of resistance (TCR) and the resistance of thick film resistors. For this reason, a well-controlled firing profile is necessary to produce constant results.

Belt furnaces with three to six zone controls are common in the thick film industry [29]. The first zone is a burnout region where the remaining organic binders are burned out of the paste. If these escape too rapidly, the resistors will blister or crater. The atmosphere must be exhausted so as not to contaminate the higher temperature zones. A two degree inclination of the furnace is the most common way of keeping a nonturbulent flow of air through the zones. Each remaining zone is set to closely match the manufacturer's recommended profile. A strip

chart recorder and thermocouple are a necessity to profile the oven and to check the settings periodically. As with most other thick film processes, it is important to maintain constant firing conditions from batch to batch.

Most thick film inks have a firing time of twenty-five to sixty minutes with a peak temperature of 750-950°C. The peak temperature is generally held for five to fifteen minutes during which time the glass materials sinter to anchor the film to the ceramic surface and to protect the metallic elements in the fired paste.

Since the firing profile can change certain types of resistor values as much as $3\frac{1}{2}$%/°C. [30], a constant temperature profile must be maintained across the belt both under load and no-load conditions.

Resistor trimmers. Once the resistors have been screen printed and fired, the final adjustment to a closer tolerance can be made with a resistor trimmer. Common types of trimmers include both abrasive and laser trimmers. Abrasive trimmers are much less expensive, but laser trimmers are ideal for active or functional trimming since no destructive overspray can harm nearby wire leads. Laser trimmers are also much faster neglecting handling time.

Abrasive trimmers can be used to trim resistors, capacitors, or thermistors. They operate in principle much like a miniature sandblaster. A stream of compressed gas such as nitrogen carries abrasive particles through a small nozzle and bombards the resistor material. As the nozzle moves across the width of the resistor, the effective aspect

ratio is increased. The resistor terminations are probed to null a bridge network when the preset value is reached. This activates a solenoid or pinch-off valve to stop the flow of particles.

Abrasive trimmers have an inherent overshoot tendency due to the pneumatic time delay between closing the pinch-off valve and stopping the trim. The pinch-off valve should be located as close to the nozzle as possible to reduce this delay. Very accurate trims (less than 0.1%) require slower nozzle speeds of one half to one and one half inches per minute [31]. However, the majority of production trimming requires no more than 1% tolerance so each trim can be made in less than a second. Since the major time factor in production trimming is handling time, neither abrasive nor laser trimmers have an advantage in this area.

Active circuit trimming can be done with either abrasive or laser trimmers. When using abrasives, the active devices must be protected from the overspray of dust. Any wire leads within a 100 milliliter radius are susceptible to the overspray and should be covered with a conformal coating. Laser trimming is dust-free and does not endanger nearby active devices. No encapsulation is needed that might thermally expand or contract thereby breaking wire bonds. Thus, laser trimming is the easiest way to actively trim a circuit if the additional cost can be justified by volume production or thermal constraints. Not all resistor material is suitable for laser trimming, as it has been shown that the noise of certain resistor materials increases significantly after laser trimming. Fortunately, most major ink manufacturers have special inks for laser work.

Wire bonding. The reliability of a hybrid circuit rests primarily in the integrity of the wire bonds. Thermocompression bonding with gold wire and ultrasonic bonding with aluminum or gold wire are by far the most popular methods in the market today. Other attachment techniques such as those used with beam-lead and flip-chip devices offer reliable alternatives to conventional bonding. In this study, an ultrasonic bonder with one-mil aluminum wire was used.

An ultrasonic wire bonder transfers power from the needle tip to the wire/conductor interface in an ultrasonic scrubbing action. Critical variables in the process are time, power, and force used. A typical bond is applied with a .25 second pulse of 300mW at the bond interface under 25-35 grams of bonding force. When bonded, the wire will deform to 1.4-1.7 times its original diameter. The bonding tool is an important part and must be relatively smooth so that the wire does not bond to it. The tip of the tool must be rounded so that the wire is not cut off at the bond heel.

Bond liftoff problems can be caused by incorrect time/power/force settings on the machine, or by the contamination of substrates or the bonding tool, or by damage to the conductors resulting from abrasive trimming [32].

Pull strength of wire bonds can be measured through destructive testing. Aluminum wire bonded to palladium-silver conductor material typically has a pull strength of five grams force. Other conductor materials such as platinum-silver and gold can provide higher bond strengths of up to thirteen grams force [33].

Thermocompression bonding (referred to as TC bonding) with gold wire is accomplished with a combination of both pressure and temperature. Pressure is controlled by weights applied to the capillary and the substrate is heated to 300-350°C. As the capillary is lowered to the bond pad, the gold ball at the end of the wire is deformed with a predetermined amount of force. After the second bond is formed, the wire tail is cut off with a small hydrogen torch. The entire process is carried out under an argon cover gas to decrease the adverse reactions of gold and heat. More recent TC bonders utilize a pulsed heated capillary, thus reducing the undersirable effects of prolonged high substrate temperatures.

CHAPTER VI

TEST AND EVALUATION OF INKS

The primary purpose of a test and evaluation program is to obtain information needed for the layout of the thick film circuit. In particular, a designer needs to know what resistor dimensions will give a desired resistor value using a given combination of conductor and resistor ink. The designer further must know to what tolerance a resistor can be screened if he is to design trimmed resistors below their nominal value. In addition, the program can be used to study the effects of printing parameters and resistor dimensions on print thickness and apparent resistivity.

For the evaluation of conductor and resistor inks, a test pattern was designed for a one inch by one inch substrate. This pattern included a wide variety of typical resistor dimensions and an array of different conductor line widths. The test pattern masters are shown in Figures 6.1 and 6.2, and the resistor dimensions are given in Table 6.1.

Conductor mask. The conductor pattern shown in Figure 6.1 was developed using a direct emulsion coating on a five inch by five inch 325-mesh stainless steel screen. The screen was tensioned to 45 mils deflection with a one pound weight applied in the center of the screen through use of an ETP tension gage [34]. Conductor line widths include five mils, ten mils, and fifteen mil patterns. The criteria for an acceptable fine line conductor ink was that it have no openings in the five mil path that extended to a total of four inches. This severe

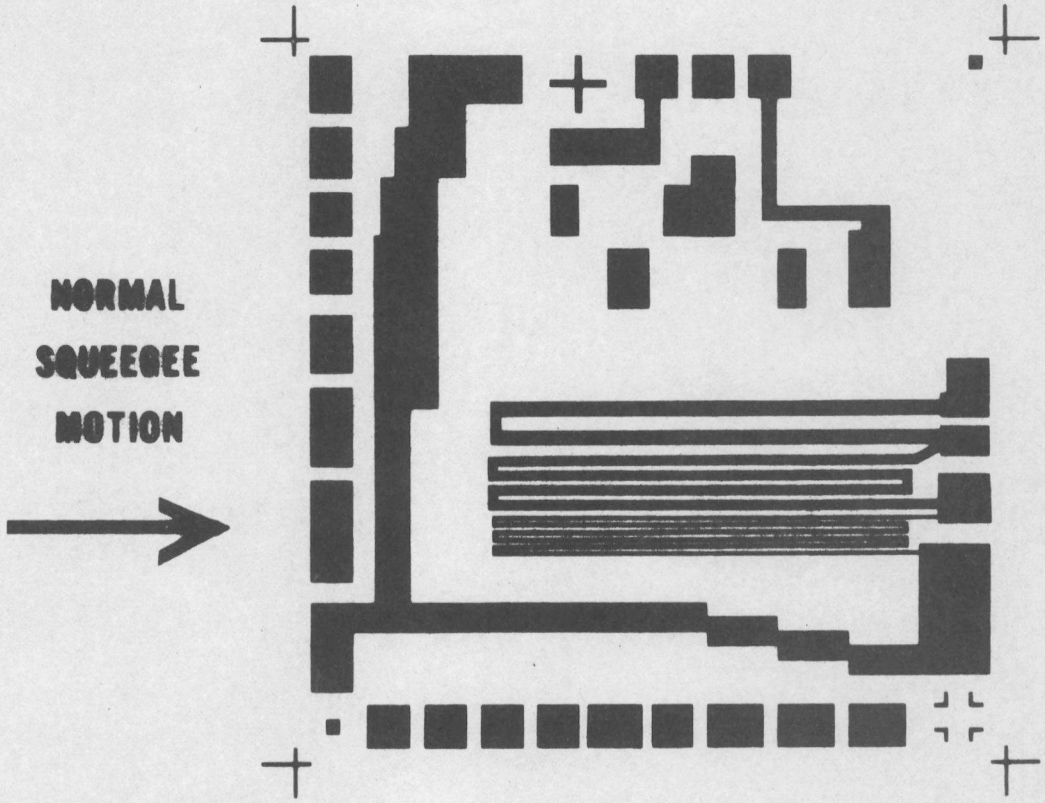

Figure 6.1

Conductor Master for Test Pattern.

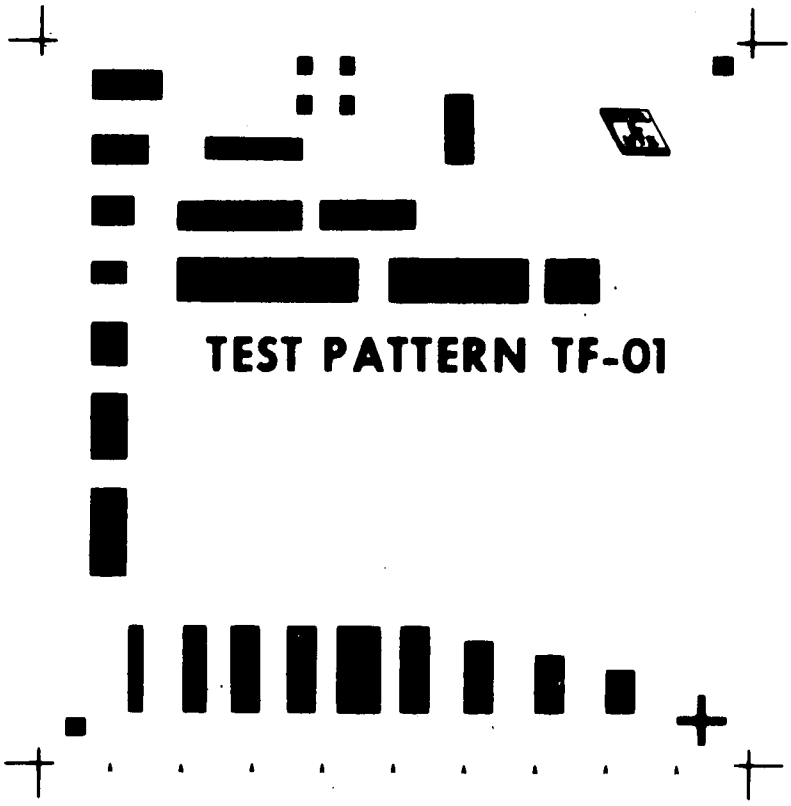

Figure 6.2

Resistor Master for Test Pattern.

Table 6.1

Resistor Dimensions for TF-01 Test
Pattern of Figure 6.2

Resistor	Length (mils)	Width (mils)	No. of Squares
R1	80	40	2
R2	60	40	1 1/2
R3	40	40	1
R4	30	30	1
R5	30	60	1/2
R6	30	90	1/3
R7	30	120	1/4
R8	120	30	4
R9	160	40	4
R10	120	40	3
R11	80	40	2
R12	240	60	4
R13	180	60	3
R14	60	60	1
R15	100	20	5
R16	100	30	3 1/3
R17	100	40	2 1/2
R18	100	50	2
R19	100	60	1 2/3

Table 6.1 (continued)

Resistor	Length (mils)	Width (mils)	No. of Squares
R20	100	40	2 1/2
R21	80	40	2
R22	60	40	1 1/2
R23	40	40	1

requirement was repeatably met by several "fine line" conductor inks made of palladium-silver or gold.

Resistor mask. The resistor pattern shown in Figure 6.2 was transferred to a 200 mesh stainless steel screen. The screen was tensioned at 40 mils deflection using the process outlined above. Resistor dimensions given in Table 6.1 show that R3 through R7 have an aspect ratio of one or less; R15 through R23, located along the bottom edge, are generally more than one square. Resistors R8 through R14 are located in the top center of the substrate and include resistors with both higher aspect ratios and greater widths. Resistors were located both perpendicular and parallel to the squeegee motion.

Apparent resistivity. Apparent resistivity has been chosen as an important tool in the study of resistor inks because it is easily determined and is immediately applicable to the design of new circuits. Apparent resistivity, or sheet resistivity, is defined as the measured resistance value divided by the aspect ratio of the resistor. This method of ink evaluation was chosen over a thickness measurement because resistance can be much more easily and accurately determined. In addition, it represents more of an average than a measurement of print thickness since the cross section of a resistor is not rectangular.

Resistor ink tests. Using the test pattern shown in Figure 6.1 and 6.2 four brands of thick film inks were screen printed with a squeegee having manual speed control onto a one inch by one inch

substrate with a palladium-silver conductor ink. All resistors were baked at the firing profile recommended by the manufacturer. Included in Tables 6.2, 6.3, and 6.4 is the average resistance ($\overline{R}$) of each resistor on the test pattern. The author is indebted to Mr. John Baker for tests performed on the Engelhard Inks. This average was taken from a small number of sample substrates which represents a possible error in this evaluation. Next to the average resistance of each resistor is its apparent resistivity (ρ_a) and normalized standard deviation ($S/\overline{R}$). The apparent resistivity for each type of ink varies with the size of the resistor, but can be approximated for future design use. The normalized standard deviation is a rough attempt to determine the spread or variation in resistance from substrate to substrate. The normalized standard deviation was determined by dividing the standard deviation of the resistor values by the mean value of the sampling.

Considerable testing was done to relate screening parameters to end product. In the first example, conductor thickness was observed as a function of the squeegee pressure applied. In the second case, a matrix of different snapoff distances and squeegee pressures was used to find their effects on the apparent resistivity of the Dupont Birox 1403 resistor ink. In these tests 144 substrates (each one inch by one inch) were printed and evaluated.

Conductor thickness. Figure 6.3 shows that as squeegee deflection or squeegee pressure is increased, fired conductor thickness decreases. These results were obtained using the conductor test pattern on a 325-

Table 6.2

Test Pattern Results for Thick Film Systems Inks

	100KΩ/□			10KΩ/□			1KΩ/□			100Ω/□		
	$\bar{R}$ (KΩ)	ρ_a (KΩ/□)	S/$\bar{R}$%	$\bar{R}$ (KΩ)	ρ_a (KΩ/□)	S/$\bar{R}$%	$\bar{R}$ (KΩ)	ρ_a (KΩ/□)	S/$\bar{R}$%	$\bar{R}$ (Ω)	ρ_a (Ω/□)	S/$\bar{R}$%
R1	169.4	84.7	19.8	14.13	7.06	11.33	1.951	.977	3.6	148.8	74.4	7.4
R2	127.2	84.8	7.4	11.12	7.42	10.5	1.469	.979	3.0	115.0	76.5	3.0
R3	71.4	71.4	7.0	6.35	6.35	6.1	.835	.835	3.5	70.0	70.0	8.1
R4	63.3	63.3	11.7	5.58	5.58	9.3	.760	.760	6.2	66.7	66.7	5.3
R5	34.3	68.6	9.6	2.79	5.58	12.5	.384	.769	5.8	29.7	59.4	2.7
R6	20.6	61.8	8.4	1.895	5.68	9.3	.255	.765	8.9	20.5	61.5	6.5
R7	15.8	63.3	8.8	1.498	5.99	10.2	.198	.793	7.9	16.75	67.0	8.5
R8	375.2	93.8	10.4	30.45	7.61	2.0	4.102	1.026	2.3	345.0	86.3	8.8
R9	401.3	100.3	12.7	35.16	8.79	3.3	4.310	1.078	3.1	352.7	88.2	7.9
R10	314.3	104.8	8.3	26.05	8.68	2.9	3.029	1.010	7.4	245.3	81.8	8.7
R11	205.4	102.7	7.3	16.70	8.35	3.1	2.075	1.037	3.8	165.8	82.9	7.6
R12	460.6	115.2	5.9	37.29	9.32	5.4	4.483	1.121	3.2	353.9	88.5	4.4
R13	337.4	112.5	4.4	28.51	9.50	5.3	3.289	1.090	3.2	265.8	88.6	4.0
R14	79.8	79.8	12.3	7.15	7.15	6.4	.807	.807	4.0	65.4	65.4	1.4

Table 6.2 (continued)

	100KΩ/□			10KΩ/□			1KΩ/□			100Ω/□		
	$\overline{R}$ (KΩ)	ρ_a (KΩ/□)	S/$\overline{R}$%	$\overline{R}$ (KΩ)	ρ_a (KΩ/□)	S/$\overline{R}$%	$\overline{R}$ (KΩ)	ρ_a (KΩ/□)	S/$\overline{R}$%	$\overline{R}$ (Ω)	ρ_a (Ω/□)	S/$\overline{R}$%
R15	561.3	112.3	12.6	42.94	8.59	5.2	5.147	1.029	7.5	553.7	110.7	5.2
R16	370.2	111.1	6.7	28.9	8.68	4.0	3.274	.982	6.6	330.3	99.1	2.9
R17	310.0	124.0	5.9	24.71	9.89	1.2	2.853	1.141	1.2	251.3	100.5	2.3
R18	262.8	131.4	6.4	22.78	11.39	6.8	2.496	1.248	7.1	216.7	108.3	4.9
R19	195.9	117.6	10.5	15.48	9.27	2.2	1.718	1.029	3.4	143.0	85.8	4.8
R20	300.2	120.1	8.2	24.35	9.74	2.4	2.623	1.049	3.1	235.7	94.3	3.3
R21	213.4	106.7	8.2	17.62	8.81	4.9	1.915	.957	3.1	169.6	84.8	2.4
R22	136.9	91.2	16.1	12.35	8.23	3.3	1.290	.860	8.4	116.0	77.3	7.6
R23	75.8	75.8	9.1	6.47	6.47	2.5	.791	.791	5.3	69.1	69.1	7.2
Average			9.5			5.7			4.8			5.4

Table 6.3

Test Pattern Results for Dupont Birox 1400 - Series Ink

	10KΩ/□			1KΩ/□			100Ω/□		
	$\overline{R}$ (KΩ)	ρ_a (KΩ/□)	S/$\overline{R}$%	$\overline{R}$ (KΩ)	ρ_a (KΩ/□)	S/$\overline{R}$%	$\overline{R}$ (Ω)	ρ_a (Ω/□)	S/$\overline{R}$%
R1	28.12	14.06	5.1	2.68	1.34	5.6	329.3	165.	4.0
R2	19.48	12.99	4.5	1.973	1.315	4.6	258.0	172.	3.4
R3	11.7	11.7	4.4	1.228	1.228	1.4	164.7	164.7	3.4
R4	11.36	11.36	2.6	1.240	1.240	1.8	176.5	176.5	3.8
R5	5.31	10.62	2.5	.572	1.144	2.3	82.55	165.1	3.9
R6	3.49	10.48	1.9	.380	1.139	1.4	52.4	157.3	3.2
R7	2.61	10.44	3.1	.279	1.117	2.4	38.25	153.	4.5
R8	55.4	13.85	3.1	5.513	1.378	3.2	600.3	150.1	2.3
R9	56.3	14.07	3.6	5.495	1.374	0.7	573.3	143.3	3.2
R10	38.46	12.82	3.0	4.26	1.42	15.5	416.6	138.9	8.0
R11	25.76	12.88	2.1	2.589	1.294	3.9	283.2	141.6	8.0
R12	57.88	14.47	1.3	5.960	1.490	4.1	571.3	142.8	2.2
R13	41.1	13.7	3.2	4.163	1.388	2.3	404.2	134.7	6.2
R14	11.12	11.12	4.3	1.438	1.438	14.1	163.2	163.2	8.7

Table 6.3 (continued)

	10KΩ/□			1KΩ/□			100Ω/□		
	$\overline{R}$ (KΩ)	ρ_a (KΩ/□)	S/$\overline{R}$%	$\overline{R}$ (KΩ)	ρ_a (KΩ/□)	S/$\overline{R}$%	$\overline{R}$ (Ω)	ρ_a (Ω/□)	S/$\overline{R}$%
R15	75.1	15.02	4.3	6.993	1.399	2.6	800.2	160.0	4.4
R16	43.3	12.99	2.8	4.19	1.26	2.6	450.0	135.0	2.6
R17	34.82	13.93	2.4	3.438	1.375	5.5	357.2	142.9	2.8
R18	31.12	15.56	2.0	3.12	1.560	5.6	316.8	158.4	5.6
R19	21.16	12.70	3.1	2.153	1.291	3.6	210.7	126.4	4.9
R20	33.56	13.42	5.6	3.413	1.365	2.4	336.0	134.4	6.9
R21	25.24	12.62	3.9	2.553	1.276	4.1	265.8	132.9	10.2
R22	17.22	11.48	3.2	1.795	1.197	5.4	199.2	132.8	16.8
R23	10.20	10.20	3.2	1.145	1.145	3.9	129.8	129.8	18.0
Average			3.27			4.30			5.96

Table 6.4

Test Pattern Results for Engelhard Inks

	100KΩ/□			10KΩ/□			1KΩ/□			100Ω/□		
	$\overline{R}$ (KΩ)	ρ_a (KΩ/□)	S/$\overline{R}$%	$\overline{R}$ (KΩ)	ρ_a (KΩ/□)	S/$\overline{R}$%	$\overline{R}$ (KΩ)	ρ_a (KΩ/□)	S/$\overline{R}$%	$\overline{R}$ (Ω)	ρ_a (Ω/□)	S/$\overline{R}$%
R1	237.9	119	6.5	18.76	9.38	2.6	1.65	.825	7.3	213	106.6	5.1
R2	183.8	123	6.5	12.98	8.65	4.2	1.153	.769	4.9	161	107.5	6.2
R3	117.1	117	7.7	7.31	7.31	2.6	.694	.694	6.7	90	90.3	3.1
R4	120.3	120	6.1	6.95	6.95	3.4	.695	.695	7.0	89	88.5	3.0
R5	57.	114	3.6	3.38	6.75	2.7	.343	.685	4.2	43	85.5	4.0
R6	38.3	115	4.4	2.27	6.81	4.4	.240	.719	7.4	30	90.8	3.2
R7	29.1	116	4.0	1.65	6.59	2.2	.177	.707	6.9	23	93.0	7.3
R8	493.9	123	5.9	36.66	9.17	3.8	3.577	.894	9.5	421	105.3	6.1
R9	459.7	115	5.7	35.98	9.00	2.1	3.468	.867	10.5	414	103.6	8.3
R10	360.4	120	6.6	26.38	8.79	3.6	2.591	.864	8.9	303	100.8	3.5
R11	254.1	127	3.8	18.29	9.15	1.7	1.752	.876	8.7	208	103.8	2.5
R12	495.5	124	2.1	36.44	9.11	1.6	3.296	.824	8.4	400	99.9	4.4
R13	389.5	130	1.8	27.26	9.09	2.4	2.506	.835	8.1	310	103.3	6.7
R14	132.9	133	3.0	8.064	8.06	4.0	.853	.853	8.4	93	93.3	9.8

Table 6.4 (continued)

	100KΩ/□			10KΩ/□			1KΩ/□			100Ω/□		
	$\overline{R}$ (KΩ)	ρ_a (KΩ/□)	S/$\overline{R}$%	$\overline{R}$ (KΩ)	ρ_a (KΩ/□)	S/$\overline{R}$%	$\overline{R}$ (KΩ)	ρ_a (KΩ/□)	S/$\overline{R}$%	$\overline{R}$ (Ω)	ρ_a (Ω/□)	S/$\overline{R}$%
R15	730.	146	5.1	44.42	8.88	6.4	4.807	.961	10.8	533	106.6	7.6
R16	402.1	122	4.4	26.95	8.17	7.3	2.882	.873	12.3	331	100.2	5.8
R17	335.7	134	2.6	22.19	8.88	6.5	2.347	.939	10.5	273	109.0	5.2
R18	300.9	120	0.77	20.48	8.19	6.8	2.195	.878	6.8	243	97.3	0.5
R19	203.1	122	1.1	13.51	8.14	6.0	1.487	.896	5.0	163	98.2	7.8
R20	326.5	131	3.2	21.30	8.52	6.3	2.488	.955	9.5	252	100.8	12.7
R21	247.4	124	2.7	16.45	8.23	4.9	1.978	.989	8.8	199	99.3	14.6
R22	201.8	135	4.8	12.56	8.38	4.4	1.433	.955	5.6	149	99.0	10.8
R23	135.7	136	3.3	7.83	7.83	3.7	.891	.891	5.6	92	92.0	7.6
Average			4.16			4.1			7.9			6.3

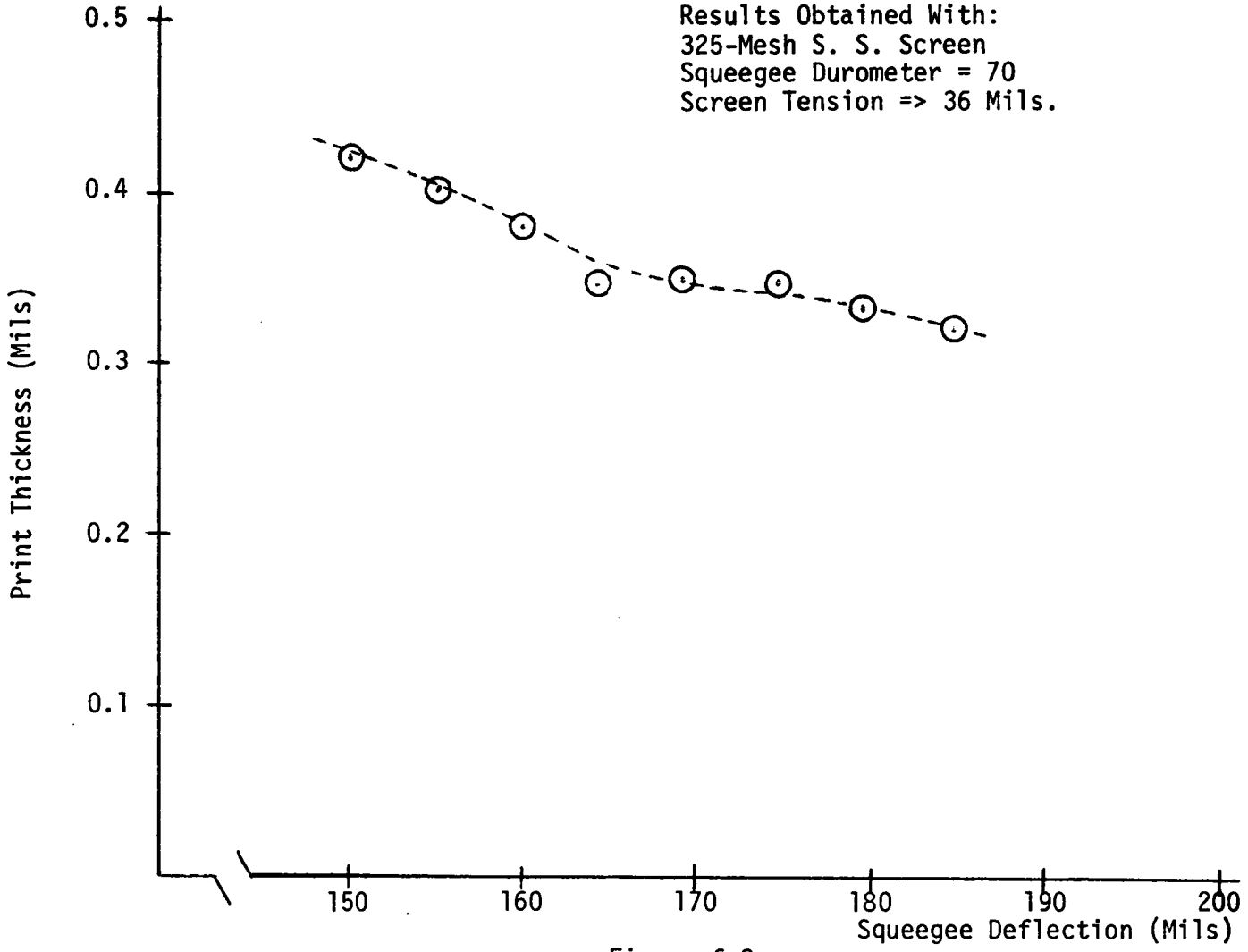

Figure 6.3

Print Thickness of Dupont 9071 Palladium-Silver Conductor
Versus Squeegee Deflection.

mesh screen with a snapoff of 29 mils and a squeegee durometer of 70. Thickness measurements were made with a micrometer dial mounted above a flat surface. The micrometer could be estimated to an accuracy of ±.05 mil. A ball-bearing tip normal to the substrate surface rolled freely over the conductor paths and the vertical displacement was measured with the micrometer. The thicknesses shown were calculated to be the conductor elevation minus the average height of the substrate on each side of the conductor as shown in Figure 6.4.

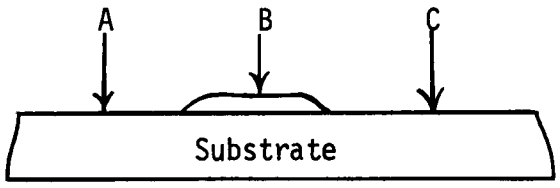

$$\bar{t} = \bar{B} - \left(\frac{A + C}{2}\right)$$

Figure 6.4

Conductor Thickness Measurement.

Printer variable test. In this setup, an attempt was made to systematically record the average resistivity achieved with different printer settings. Table 6.5 lists the various settings used.

Groups A and C have been compared in Figure 6.5 to show the effect of squeegee hardness on apparent resistivity. Clearly, a softer squeegee produces a thicker print. This is consistent with the idea that a lower printing pressure in the plug flow region produces a thicker print [35]. Printing pressure depends on the downward force of the

Table 6.5

Screen Printer Settings Used to Study
Effects on Apparent Resistivity

Group	Number of Units	Snapoff (mils)	Squeegee Deflection (in 10 mil steps) (mils)	Durometer
A	18	25	140-190	60
B	18	30	150-200	60
C	18	25	140-190	70
D	18	30	140-190	70
E	18	35	140-190	70
F	18	40	140-190	70
G	18	30	140-190	80
H	18	30	140-190	70 (thinner added)

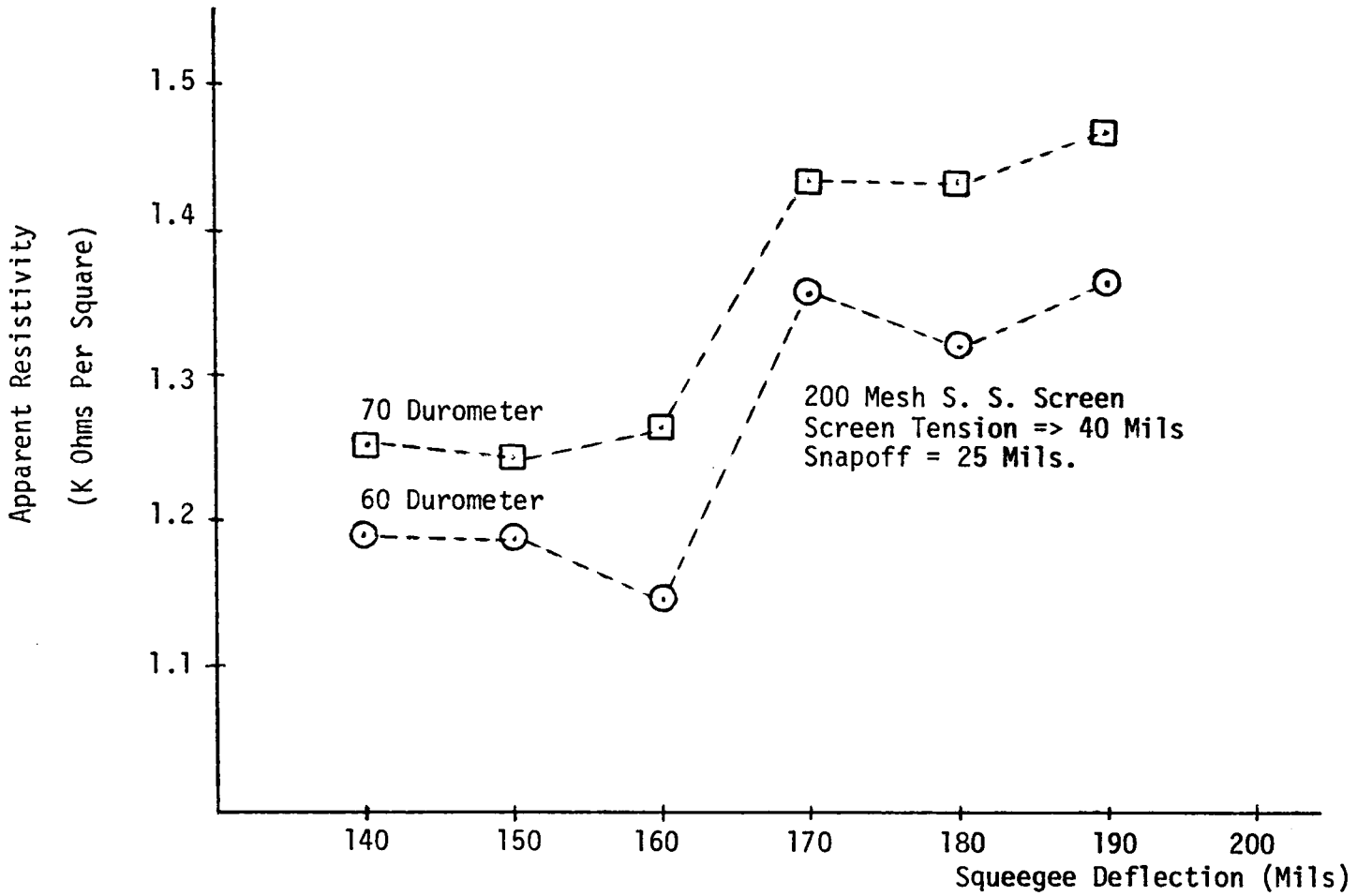

Figure 6.5

Effect of Squeegee Hardness on Apparent Resistivity.

squeegee, the vertical component of the stretched screen, the area of the deformed squeegee blade, and the speed of the squeegee. A harder squeegee would produce a smaller cross section of squeegee/screen interface, and would therefore have a higher printing pressure than with a softer squeegee given the same squeegee force, snapoff, and the screen tension in each case.

Figure 6.6 indicates the effect of snapoff distance on apparent resistivity, and is obtained from groups C, D, and E of Table 6.6. Each group had common squeegee deflection and used a 70 durometer squeegee. Note that as snapoff increases, the average apparent resistivity decreases. This is again consistent with the idea that a lower printing pressure produces a thicker print. As snapoff is increased, printing pressure is reduced with a given squeegee deflection because the vertical component of screen tension is higher and the compressed spring is elongated by the change in snapoff distance, thus reducing the squeegee force. It is important to note that this test shows only the effect of printing pressure on print thickness. It relates snapoff variations to changes in apparent resistivity with fixed printer settings, not fixed printing pressure.

Figure 6.7 illustrates the effect of adding two drops of thinner to about 1/2 Troy ounce of the Dupont Birox 1403 resistor ink. The apparent resistivity was greatly increased due to the change in ink viscosity. This certainly reinforces the manufacturer's suggestion to never thin a resistor ink! Thinning of conductor ink is often necessary and is done as a matter of course.

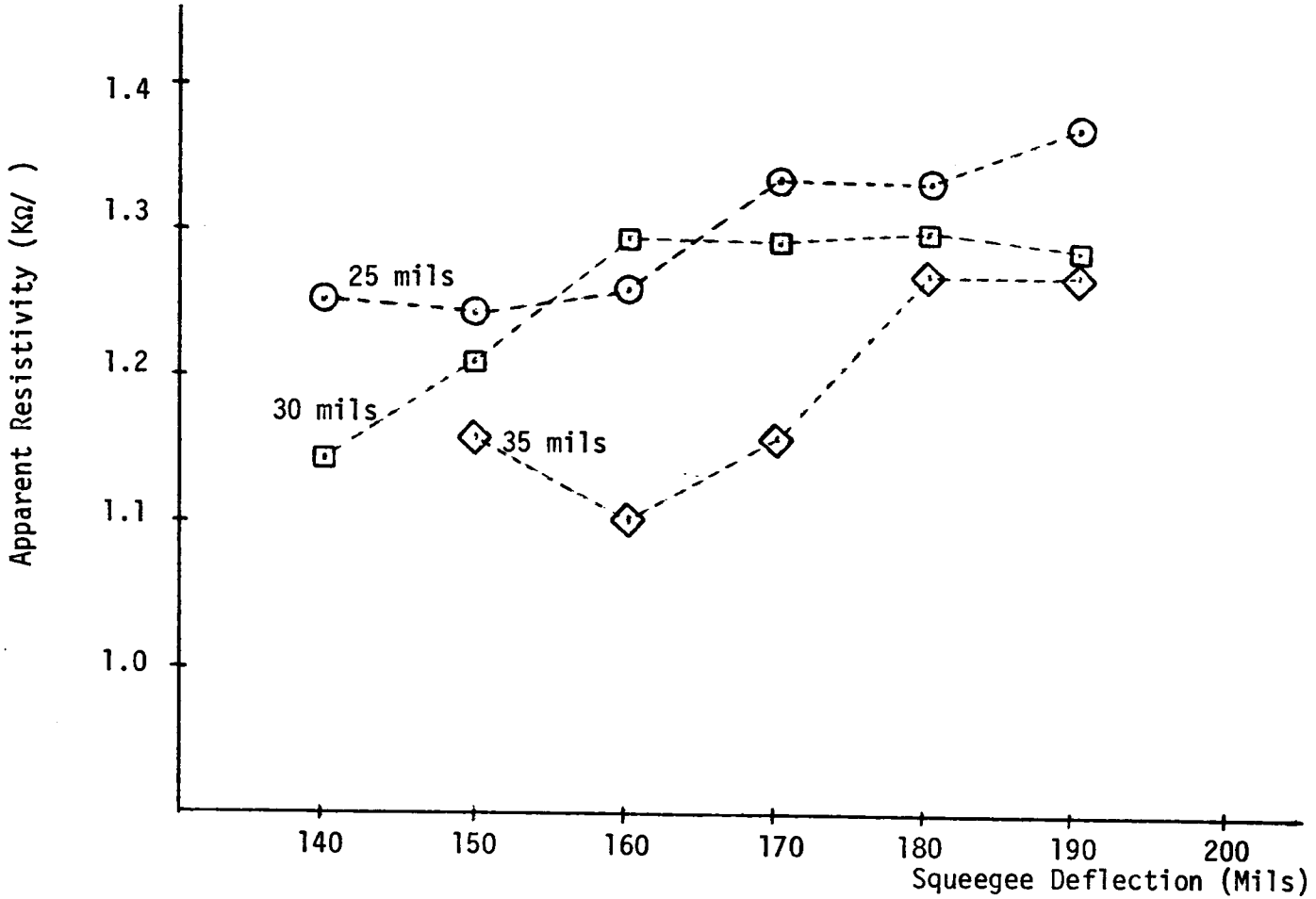

Figure 6.6

Effect of Snapoff Distance in Apparent Resistivity With Constant Screen Tension = 40 Mils and Squeegee Durometer = 70.

Table 6.6

Average Apparent Resistivity of Resistors R15-R19 of the TF-01 Test Pattern for TFS and Dupont Birox Inks

	Width (mils)	TFS 100Ω/□	TFS 1KΩ/□	TFS 10KΩ/□	TFS 100KΩ/□	Dupont Birox 100Ω/□	Dupont Birox 1KΩ/□	Dupont Birox 10KΩ/□
R15	20	100.7	1.029K	8.59K	112.3K	160.	1.399K	15.02K
R16	30	99.1	.982K	8.68K	111.1K	135.	1.26K	12.99K
R17	40	100.5	1.141K	9.89K	124. K	142.9	1.38K	13.93K
R18	50	108.3	1.248K	11.39K	131.4K	158.4	1.56K	15.56K
R19	60	85.8	1.029K	9.27K	117.6K	126.4	1.29K	12.70K

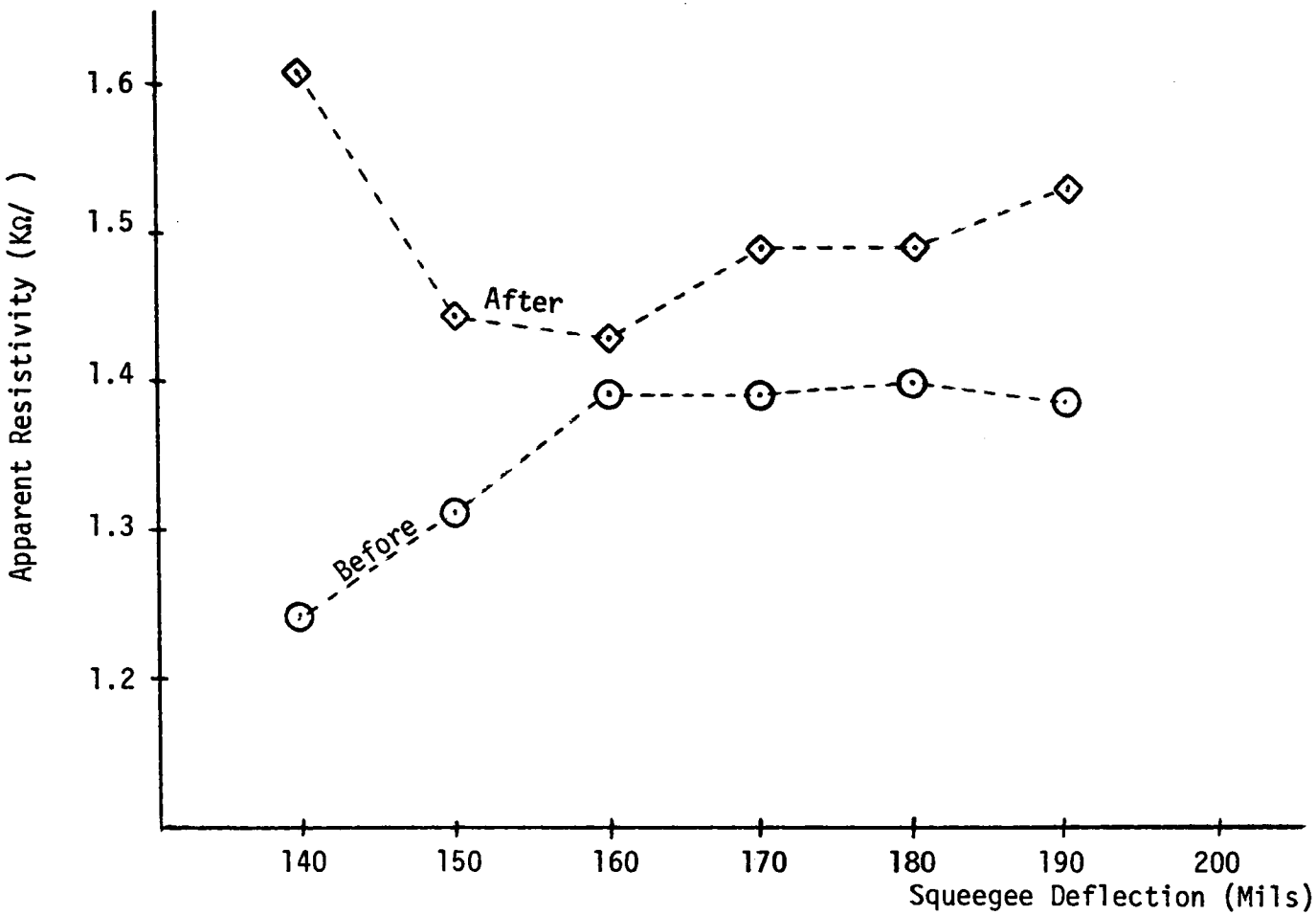

Figure 6.7

Effect of Adding Two Drops Thinner to One Half Ounce Quantity of Ink
Snapoff = 30, Durometer = 70 and Screen Tension = 40.

Resistor width. Some data shown in Tables 6.2 (page 40) and 6.3 (page 42) was used to relate resistor width to apparent resistivity, or inversely, print thickness. Test pattern resistors R15 through R19 were chosen for evaluation since each had a length of 100 mils and were in close proximity when screened. Table 6.6 records the average apparent resistivity of R15 through R19 for TFS and Dupont inks. By normalizing each ink to the apparent resistivity at R16 (30 mil width), a relationship of apparent resistivity to resistor width can be seen for all seven inks in Figures 6.8 and 6.9. It seems that as a resistor width is increased to 30 mils, the apparent resistivity decreases indicating that a higher percentage of ink in the screen openings is being transferred. As the resistor width is increased to 50 mils, the apparent resistivity increases. This is because the emulsion does not support the center of the image and allows for a thinner print [36]. Past 50 mils wide, apparent resistivity again decreases toward the normalized value.

Temperature coefficient of resistance (TCR). Dupont Birox 100Ω/square, 1KΩ/square, and 10KΩ/square inks were screen printed on several sample substrates using the TF-01 test pattern. The TCR was measured and averaged for each resistive ink, where TCR is defined as follows:

$$TCR = \frac{\Delta R}{\Delta T \cdot R_{25°C}} \text{ (expressed as parts per million per °C)} \qquad (6.1)$$

The TCR's of those resistors of more than one square were compared to the TCR's of resistors of less than one square. As shown in Table 6.7,

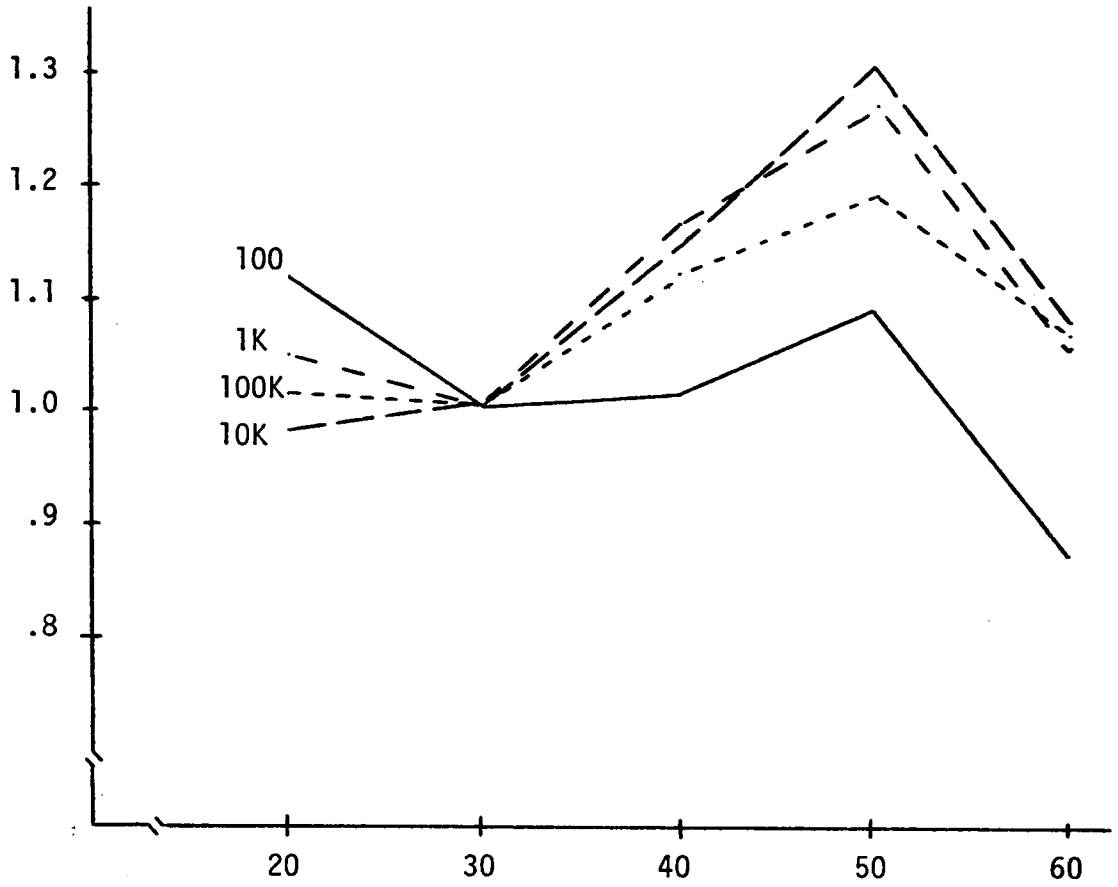

Figure 6.8

Apparent Resistivity of 100-Mil-Long TFS Resistors Normalized to the 30-Mil-Wide Value.

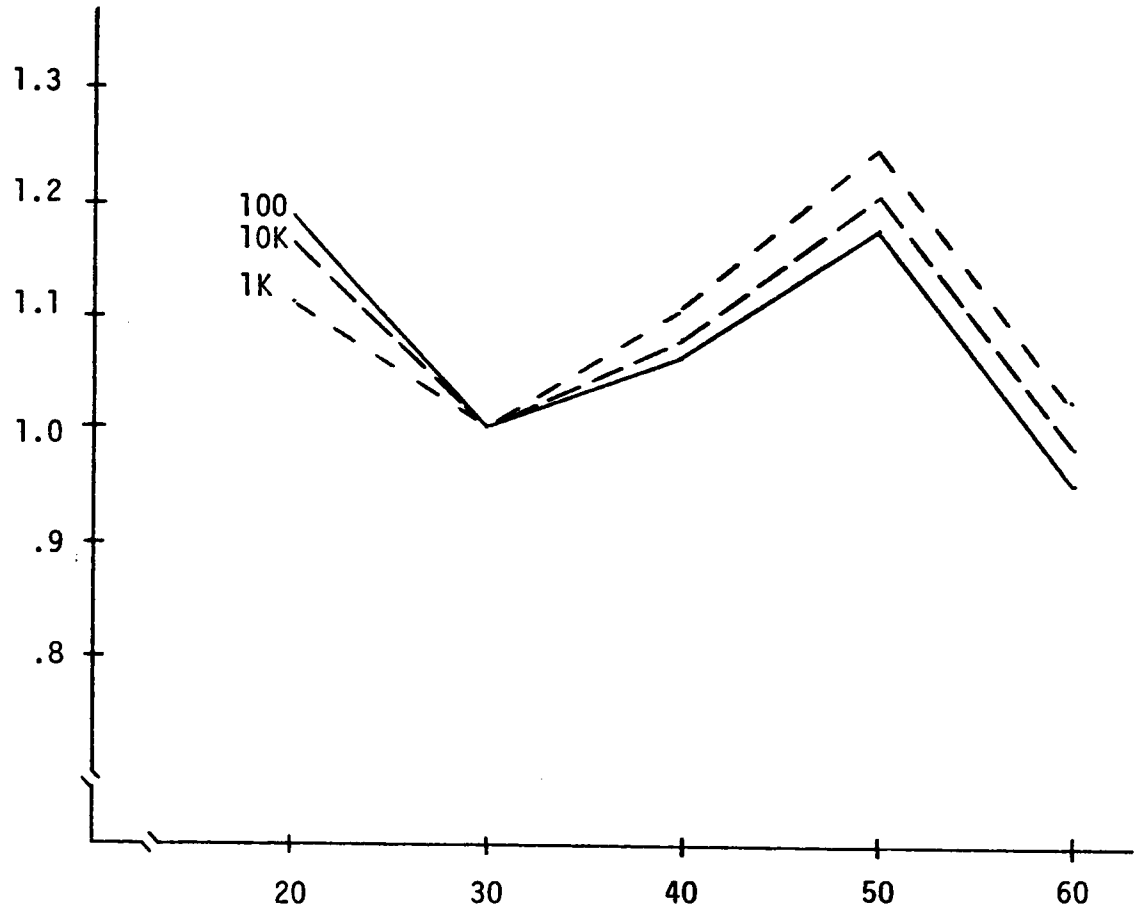

Figure 6.9

Apparent Resistivity of 100-Mil-Long Dupont Resistors Normalized to the 30-Mil-Wide Value.

Table 6.7

Temperature Coefficient of Resistance of Dupont Birox Inks Tested From 25-65°C Given in Parts Per Million Per °C

Ink Used	Average TCR	TCR Of Resistors Less Than One Square	TCR Of Resistors Greater Than One Square
100Ω/□	69.6	81.	63.
1KΩ/□	53.2	73.3	41.5
10KΩ/□	55.	71.5	44.5

the TCR is definitely influenced by resistor geometry. In general, those resistors consisting of more than one square had a lower TCR than those of less than one square [37]. For circuits where TCR is extremely important, it appears profitable to fabricate the same resistor value with the next lower decade in ink value and, for example, have a 5K ohm resistor made from five squares of 1K ohm per square ink rather than one half square of 10K ohm per square ink. Of course, the TCR will be affected by the type of conductor ink used [38]. These tests were performed using palladium-silver termination.

CHAPTER VII

EXAMPLE OF A PRACTICAL CIRCUIT CONSTRUCTION

In this chapter the design guidelines presented in previous chapters will be utilized to show an example of a thick-film hybrid microcircuit fabrication sequence. In the example presented, it was found that the thick-film hybridization of a high-frequency pulse amplifier considerably improved its transient response characteristics.

The discrete circuit was developed by J. T. DeLorenzo for use with a fission counter having a 100 nanosecond electron collection time [39]. The circuit diagram is shown in Figure 7.1. The transient pulse response for both the discrete and hybrid circuit is shown in Figures 7.2 and 7.3. The applied input pulse in both cases had a 10-90% rise time of one nanosecond; hence, the approximate rise times of the amplifiers can be estimated from Figure 7.2 as

$$\tau^2_{r_{discrete}} = (2.6)^2 - (1.0)^2$$

or

$$\tau_{r_{discrete}} = 2.4 \text{ n sec} \tag{7.1}$$

and

$$\tau^2_{r_{hyrid}} = (1.4)^2 - (1.0)^2$$

or

$$\tau_{r_{hybrid}} = 1.0 \text{ nsec} \ . \tag{7.2}$$

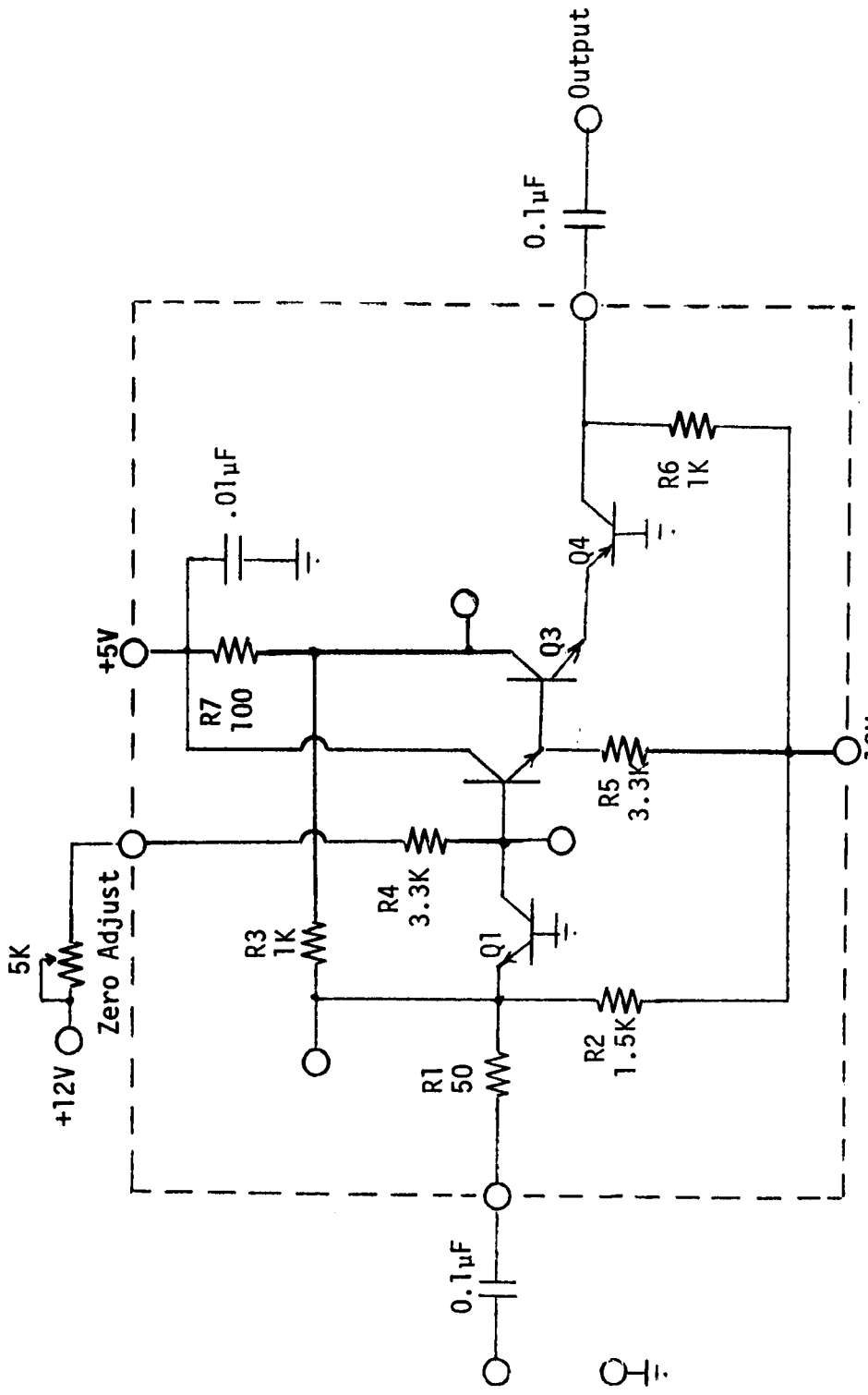

Figure 7.1

High Frequency Amplifier Circuit.

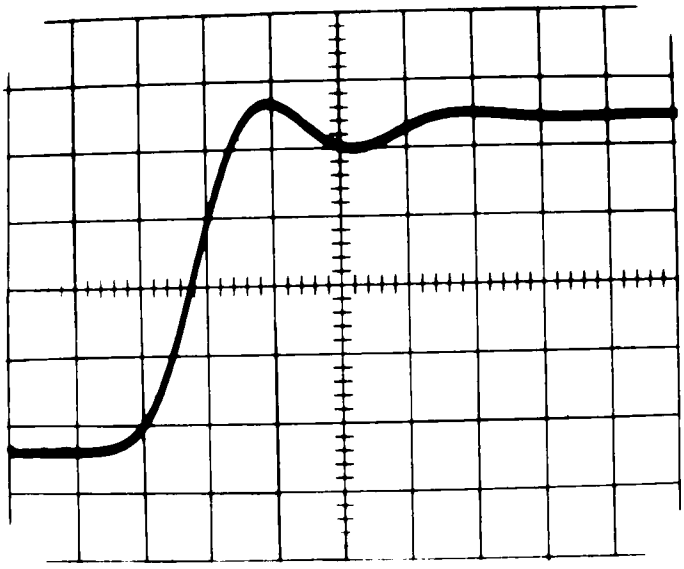

(a)

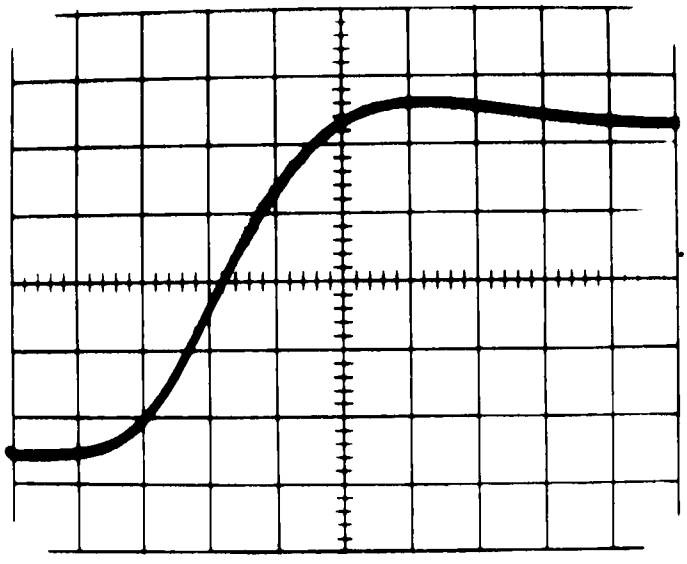

(b)

Figure 7.2

Comparison of Thick-Film Hybrid Step Response to the Discrete Response. (a) Thick-Film Hybrid Step Response (1 nsec/div). (b) Discrete Step Response (1 nsec/div).

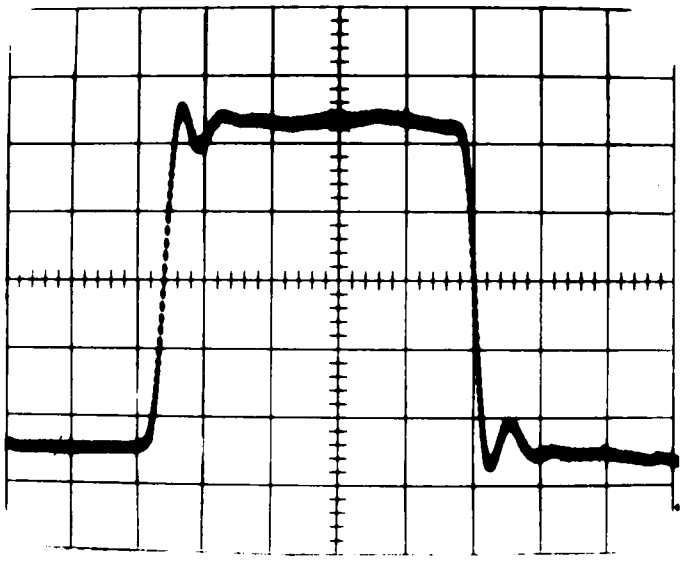

(a)

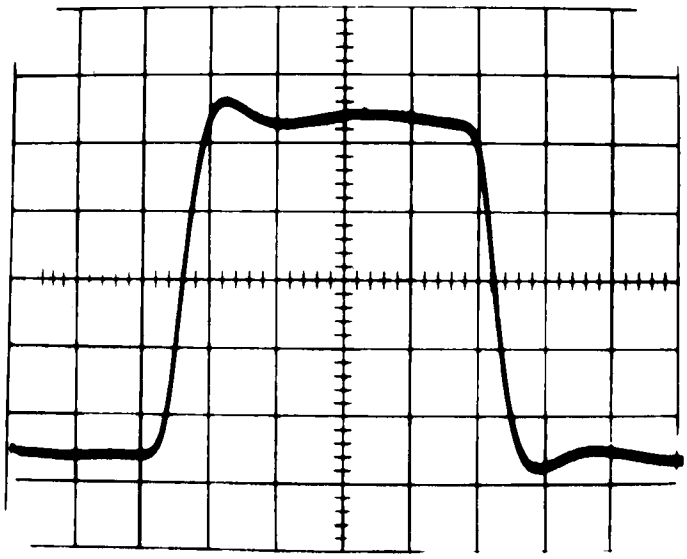

(b)

Figure 7.3

Comparison of Thick-Film Hybrid Waveform to the Discrete Waveform. (a) Thick-Film Hybrid Waveform (5 nsec/div). (b) Discrete Circuit Waveform (5 nsec/div).

Thus it is seen that the response time of the hybrid version was a factor of 2.4 times better than that of the conventionally constructed printed-circuit board discrete model. The decrease in rise time of the hybrid circuit can be attributed to less parasitic capacitance, lower lead inductance, and a shorter feedback path. In addition, the unit to unit response is much more uniform because of fixed lead geometry inside the circuit loop. This is especially desirable when two preamps are used in a differential arrangement.

Layout considerations. The thick film layout began with an estimation of the substrate area required. A table was composed listing all resistors, capacitors, and transistors to be included inside the hybrid package. R1 of Figure 7.1 was reduced to 25-ohms so that an overload protection circuit could be added externally and still properly terminate a 50-ohm coaxial cable, as shown in Figure 7.4. In addition, several nodes were to be pinned out of the packages as shown in Figure 7.1. All resistors were to be abrasively trimmed with extreme precision given to the feedback resistors, R3 and R7.

The power dissipated in each resistor was calculated using the formula $P=I^2R=V^2/R$. A minimum area, A_{min}, for each resistor was calculated based upon the power dissipation rating of the ink, P_{rated}, given in watts per square inch, to be

$$A_{min} = \frac{P_{required}}{(.5)\ P_{rated}}, \qquad (7.3)$$

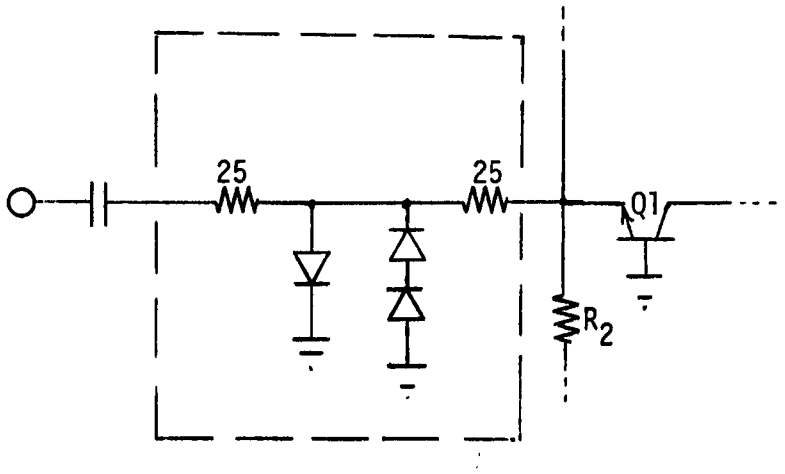

Figure 7.4

Overload Protection Circuit.

where $P_{required}$ is the power dissipated in each resistor. Note that the power dissipation rating of the ink has been conservatively decreased to fifty percent to allow for any current crowding or hot spots encountered from trimming. Untrimmed resistors are commonly specified to withstand fifty watts per square inch, and the resistor areas required are indicated in Table 7.1.

Thick Film Systems inks were used in this fabrication and the test data shown in Table 6.2 of page 40 was used to determine resistor dimensions.

Table 7.1

Resistor Area Required for Fast Amp Circuit

	Power Dissipation (mW)	Minimum Area Required (mil^2)
R1	-	-
R2	84.4	2813
R3	20.25	675
R4	29.7	990
R5	54.4	1813
R6	56.	1817
R7	14.4	480

From the resistor values required, it was determined that two resistor inks would be screened. Resistors R1 and R7 would be screened with 100 ohm-per-square ink, and R2 through R6 would be screened with 1K ohm-per-square ink. A Palladium - Silver conductor ink was selected that had earlier been used successfully for the test pattern conductor. A low-K dielectric ink of the same brand was chosen for the crossover layer.

Each resistor to be trimmed was designed to be eighty percent of its nominal value in order to screen-print and fire all resistors below their desired value prior to trimming. The apparent resistivity, P_a, of the 1K ohm-per-square ink was approximated at 1.1K ohms-per-square and that of the 100 ohm-per-square ink was approximated at 105 ohms-per-square. The number of square, N, needed for each resistor was determined by

$$N = \frac{L}{W} = \frac{.8R}{P_a} . \qquad (7.4)$$

For each resistor, the length and width were then calculated and the area obtained was checked with the minimum area required. Summing all of the required areas in Table 7.2 and multiplying by a rule-of-thumb factor of five, it was determined that the circuit could be designed on a one half inch by one half inch substrate, and the first pencil layout, shown in Figure 7.5, was drawn beginning with the termination pads on each side on 0.100 inch centers.

Table 7.2

Hybrid Component List for High Frequency Amplifier

		Value	Type	Length*	Width*	Area†
Resistors	R1	25.	100Ω/□	30	70	3600
Resistors	R2	1.5K	1KΩ/□	70	55	3850
Resistors	R3	1.K	1KΩ/□	40	48	1920
Resistors	R4	3.3K	1KΩ/□	98	35	3430
Resistors	R5	3.3K	1KΩ/□	84	30	2520
Resistors	R6	1.K	1KΩ/□	40	45	1800
Resistors	R7	100.Ω	100Ω/□	40	45	1800
					Total Resistor Area =	18920 mils^2
Transistors	Q1	35820A	Chip	25	25	625
Transistors	Q2	MMCS2857-1	Chip	25	30	750
Transistors	Q3	MMCS2857-1	Chip	25	30	750
Transistors	Q4	MMCS4957-1	Chip	20	25	500
					Total Transistor Area =	2625 mils^2
Capacitors	C1	.01μF	Chip	75	35	2625
					Total Capacitor Area =	2625 mils^2
					Required Substrate Area =	120850 mils^2

* All dimensions in mils (0.001 inches)

† Area in mils^2

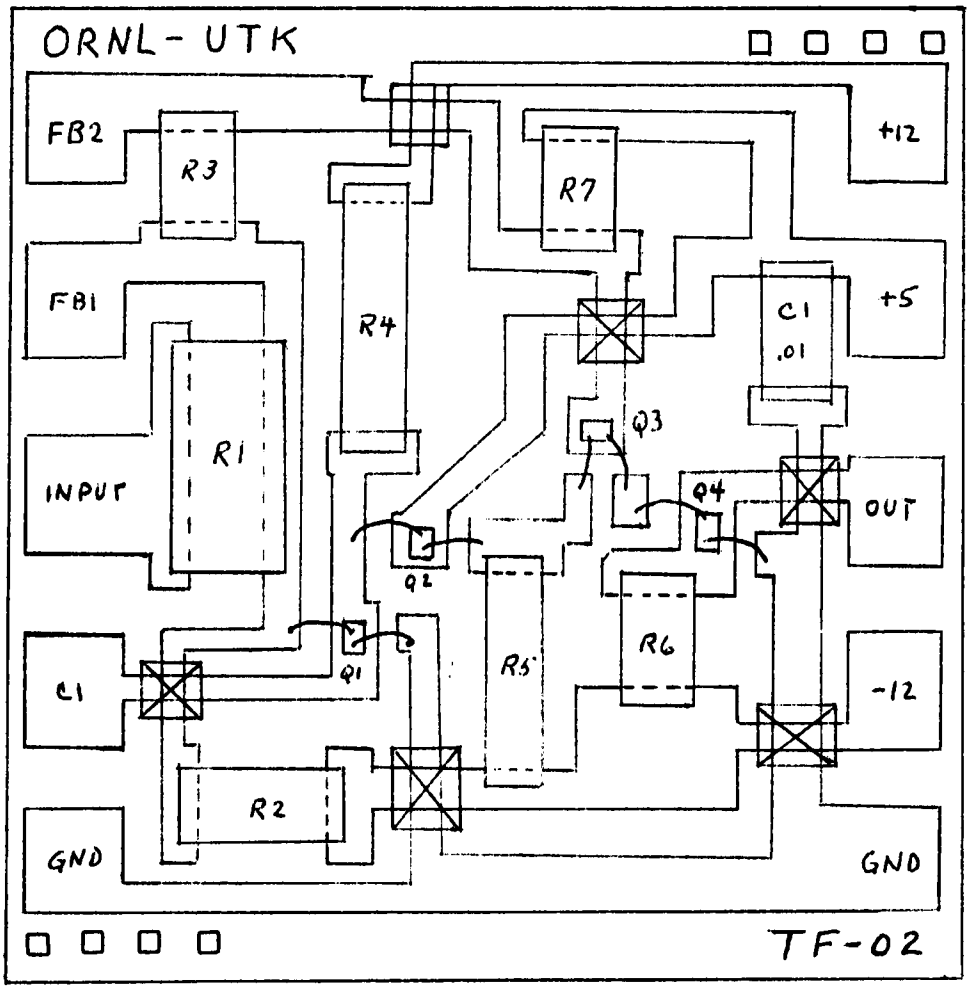

Figure 7.5

First Pencil Layout of High-Frequency Amplifier.

After the first layout sketch, the final taped layout on mylar was constructed for each mask required. Shown in Figure 7.6 are the five layers: first conductor, crossover, second conductor, first resistor, and second resistor.

The circuit was processed according to the previously established guidelines with the required steps condensed in Table 7.3. A photograph of the finished circuit, after the chips have been attached and bonded, is shown in Figure 7.7 with the lid removed.

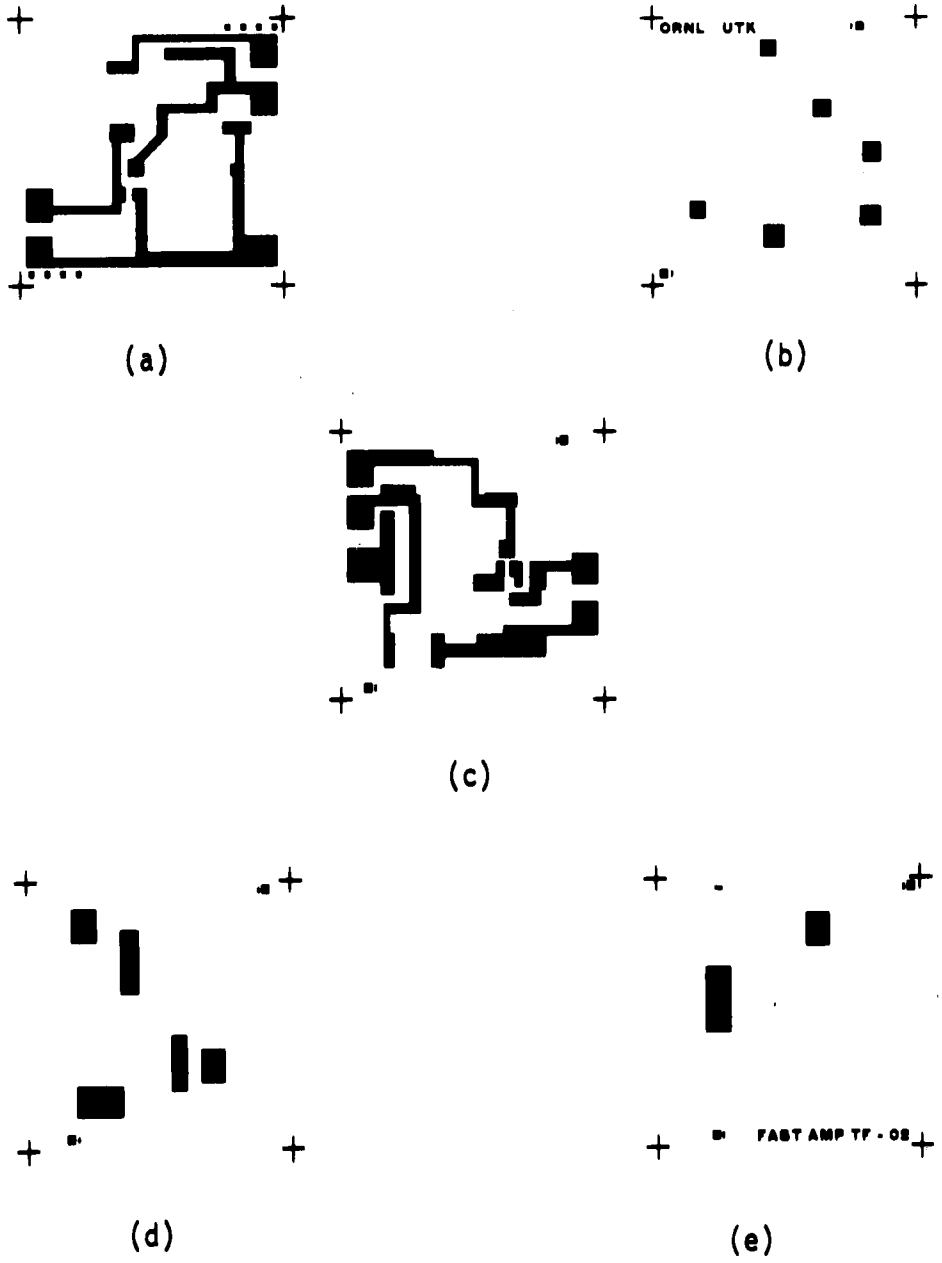

(a) (b) (c) (d) (e)

Figure 7.6

The Five Layers of the Hybrid Circuit.
(a) First Metallization. (b) Crossover.
(c) Second Metallization. (d) 1KΩ/□
Ink. (e) 100Ω/□ Ink.

Table 7.3

Fabrication Steps for Hybrid Amplifier Example

Screen First-Conductor
Pre-Fire First Conductor (Hot-Plate or Air Circulating Oven at 120°C)
Fire in Thick-Film Furnace (at 850°C Peak)
Screen Crossover Dielectric
Pre-Fire
Fire in Furnace
Screen Second-Conductor
Pre-Fire
Fire in Furnace
Check for Visual Pin-Holes and Opens in Second Conductor
Screen First Resistor (1 KΩ/□)
Pre-Fire
Screen Second Resistor (100Ω/□)
Pre-Fire
Fire in Furnace
Trim Required Resistors to Tolerance
Mount Substrate in Package
Attach All Chips
Bond Wires From Chips to Substrate and Connections From Substrate to Package Terminals
Electrical Test of Circuit For Design Specifications
Attach Package Lid.

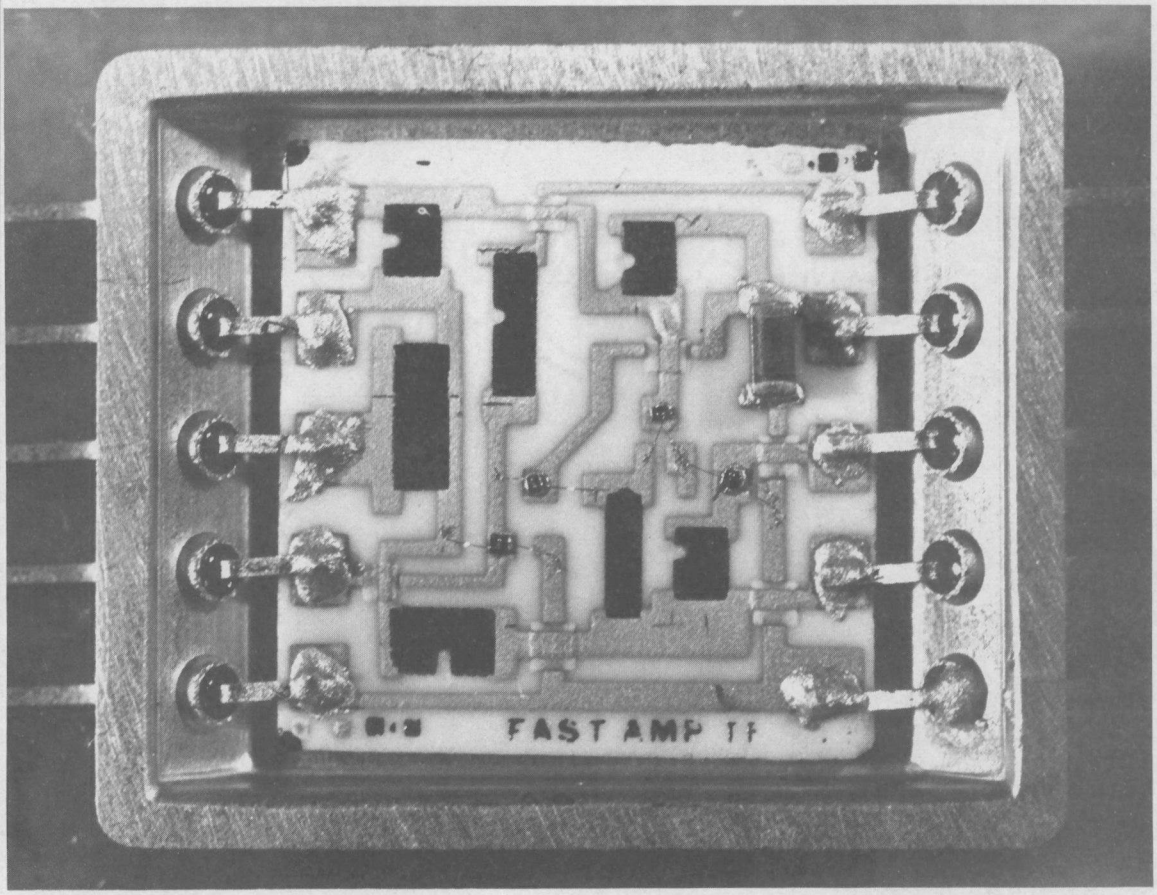

Figure 7.7

Photograph of Completed Hybrid Amplifier With
the Package Lid Removed.

LIST OF REFERENCES

LIST OF REFERENCES

1. D. W. Hamer and J. V. Biggers, Thick Film Hybrid Microcircuit Technology, Wiley-Interscience, New York, 1972, p. 53.

2. M. L. Topfer, Thick Film Microelectronics, Van Nostrand Reinhold Company, New York, 1971, p. 28.

3. C. A. Harper, Handbook of Thick Film Hybrid Microelectronics, McGraw-Hill Book Company, New York, 1974, pp. 2-9.

4. Layout Guidelines for Thick Film Hybrid Microcircuits, NASA Publication No. S&E-ASTR-RMH-72-1A, Nov. 21, 1972.

5. M. L. Toper, Thick Film Microelectronics, Van Nostrand Reinhold Company, New York, 1971, p. 33.

6. J. P. Baker, "Evaluation of Via Capability," Unpublished Laboratory Notes, University of Tennessee, (Jan. 1975).

7. Engelhard Industries Division, Technical Publication, "Rely-Ohm Thick Film Resistor System."

8. M. L. Toper, Thick Film Microelectronics, Van Nostrand Reinhold Company, New York, 1971, pp. 33-66.

9. C. A. Harper, Handbook of Thick Film Hybrid Microelectronics, McGraw-Hill Book Company, New York, 1974, pp. 2-49 to 2-61.

10. F. Franconville et al., "Screen: Essential Tool For Thick Film Printing," ISHM PROCEEDINGS: 1974, pp. 154-163.

11. Available From Advance Process Supply Co., 400 N. Noble St., Chicago, Ill., 60622, Catalog No. 15-3508.

12. Available From Advance Process Supply Co., 400 N. Noble St., Chicago, Ill., 60622, Catalog No. B15-3504.

13. F. Franconville, "Screen: Essential Tool For Thick Film Printing," ISHM PROCEEDINGS: 1974, p. 159.

14. Available From Advance Process Supply Co., 400 N. Noble St., Chicago, Ill., 60622, Catalog No. 15-3508.

15. Available From Advance Process Supply Co., 400 N. Noble St., Chicago, Ill., 60622.

16. Available From Advance Process Supply Co., 400 N. Noble St., Chicago, Ill., 60622, Catalog No. 15-7702.

17. F. Franconville, "Screen: Essential Tool For Thick Film Printing," ISHM PROCEEDINGS: 1974, p. 154.

18. F. Franconville, "Screen: Essential Tool For Thick Film Printing," ISHM PROCEEDINGS: 1974, p. 160.

19. F. Franconville, "Screen: Essential Tool For Thick Film Printing," ISHM PROCEEDINGS: 1974, p. 155.

20. I. D. Salisbury, Variables in the Screen Printing Process and Their Effect on Thick Film Resistor Deposition in Large Scale Production.

21. F. Franconville, "Screen: Essential Tool For Thick Film Printing," ISHM PROCEEDINGS: 1974, p. 155.

22. I. D. Salisbury, Variables in the Screen Printing Process and Their Effect on Thick Film Resistor Deposition in Large Scale Production.

23. D. W. Hamer and J. V. Biggers, Thick Film Hybrid Microcircuit Technology, Wiley-Interscience, New York, 1972, p. 170.

24. R. E. Trease and R. L. Dietz, "Rheology of Pastes in Thick Film Printing," Solid State Technology, Jan. 1970.

25. R. W. Atkinson, "Squeegee Pressure and Thick Film Resistor Fabrication," Solid State Technology, July, 1970, pp. 58-64.

26. L. F. Miller, "Paste Transfer in the Screening Process," Solid State Technology, June, 1969, p. 49.

27. Jon A. Van Hise, "Process Variables in Thick Film Resistor Fabrication," Solid State Technology, July, 1970, pp. 60-61.

28. I. D. Salisbury, Variables in the Screen Printing Process and Their Effect on Thick Film Resistor Deposition in Large Scale Production.

29. C. A. Harper, Handbook of Thick Film Hybrid Microelectronics, McGraw-Hill Book Company, New York, 1974, pp. 3-29.

30. J. R. Beall and R. E. Culp, "Reliability Considerations for Ultrasonic Wire Bonding on Thick Film Conductors," ISHM PROCEEDINGS, 1974, p. 199.

31. E. I. DuPont de Nemours & Co., Electrochemicals Dept., "The Thick Film Handbook," Wilmington, Del.

32. C. A. Harper, Handbook of Thick Film Hybrid Microelectronics, McGraw-Hill Book Company, New York, 1974, pp. 3-39.

33. E. I. DuPont de Nemours & Co., Electrochemicals Dept., "Product Literature," Wilmington, Del.

34. Available From Engineering Technical Products, Somerville, New Jersey.

35. Planer and Phillips, Thick Film Circuits, Crane, Russak and Co., Inc., New York, 1972, pp. 81-82.

36. L. F. Miller, "Paste Transfer in the Screening Process," Solid State Technology, June, 1969, p. 49.

37. Shih, Tsen-tsou, "Improved Silver-Palladium Termination for Thick Film Resistors," ISHM PROCEEDINGS, 1974, pp. 35-37.

38. Engelhard Industries Division, Engineering Bulletin, "Relationship Between TCR and Aspect Ratio for Rely-Ohm Resistors," March, 1975.

39. J. T. DeLorenzo, "Low-Noise, Wide-Band, Current-Pulse Preamplifiers For Neutron Counters," IEEE Transactions on Nuclear Science, Vol. NS-18, No. 2, April, 1971.

VITA

Richard Allen Todd was born in Oklahoma City, Oklahoma, on December 28, 1951. He attended elementary schools in Knoxville, Tennessee where he graduated from Central High School in 1969. He entered The University of Tennessee in September 1969 and received a Bachelor of Science Degree in Electrical Engineering in June 1973.

He entered the Graduate School at The University of Tennessee in September 1973. While in Graduate School he worked as a teaching assistant for the Electrical Engineering Department and as a research assistant on contract with Oak Ridge National Laboratory.

He is married to the former Susan McTeer Porter of Knoxville, Tennessee.