Redesign of the Thermal Imaging Brick Used on the IRIS Safebot

ECE 400
Senior Design
Imaging, Robotics, and Intelligent Systems Laboratory

The University of Tennessee, Knoxville

Michael Lay
Andy Malone
Jesse Richmond

May 4, 2005

The Thermal Imaging Brick redesign was accomplished in the spring of 2005 by a team of three people. As part of my honors project, I was in charge of every aspect of the power system of the brick. Anything to do with batteries, power conversion and the power diode was my responsibility. In the end, due to time constraints I was only able to run the completed box through some basic functionality tests, whose results are described later on in the report.

Michael Lay

Abstract

Infrared imaging sensor brick system has been redesigned to improve its size, performance, and modularity. The brick will be used to perform under-vehicle inspections on the Safebot and as such must be compact and relatively self-sufficient. We have successfully completed the redesign and have constructed a prototype. This prototype maintains all the functionality of the previous system while allowing the computing platform to be compatible with both the vision and range sensing devices. Other new capabilities that were included in the new design include hot-swappable batteries, a single power switch, and the ability to be run off of a 12 volt bus or the AC mains. Because of the reduced size of all of the sensing bricks, it is now possible to load multiple sensors on the Safebot.

TABLE OF CONTENTS:

Introduction 4
- Motivation 4
- Application 5

Infrared Sensor Brick Hardware Development . . 5
- The Brick Concept 5
- Early Design Considerations 6
- Group Integration 7
- Final Design 8
- Troubleshooting 9
- Results of Testing 10

Description of the Design 11

Future Work 14

Introduction

Over the course of the semester, we have redesigned the thermal imaging brick intended by the IRIS labs to conduct under-vehicle inspections. Initially, we were handed a system that, while it provided the necessary functionality, was not an optimum design in any sense of the word. We decided to implement a small single board computer to replace the laptop being used in the initial design. We kept the Panasonic lead acid battery system and added a hot swap capability. We also added AC and DC power inputs to the brick and worked in tandem with the visual and range brick teams to come up with a common computing and power platform on which to mount our respective sensors.

Motivation:

The original design for the thermal imaging brick, while certainly usable as a proof of concept prototype, left many areas for improvement in design. In particular, the box was a very large design, which occupied the entire bay of the Safebot and prevented anything else from being used simultaneously. Our project was to redesign the thermal brick, aiming primarily for a smaller size while using the same camera.

Figure 1: Original thermal brick in Safebot. (Image courtesy of Nikhil Naik)

Additionally, there are two other sensors that could be useful in conjunction with the thermal camera, a visual camera and a laser range finder. By combining multiple types of cameras, one can gain additional information about the objects being studied. For instance, with a clever design, an object can be hidden underneath a car in such a way that to a visual camera, it appears to simply blend in with the rest of the components; using a thermal camera, it may be possible to see that the object does not match the rest of the vehicle and may be a suspicious object worthy of closer inspection.

Application:

In recent years, a renewed interest in safety and defense has been sparked in this country. It is often desirable to be able to inspect vehicles as they approach sensitive areas without being close enough to the vehicle to put the inspector in danger. By using these sensor bricks on the Safebot modular robot, it will be possible to inspect vehicles via a computer from a remote location. With the smaller size afforded by this redesign, we may be able to gain multiple forms of imaging on a single Safebot, thus giving a broader view of anything that may appear suspect.

Figure 2: New brick in Safebot, ready to inspect underneath a vehicle.

Infrared Sensor Brick Hardware Development

The infrared imaging sensor brick has gone through many design changes over the course of the semester. To understand how the final design was chosen, it is necessary to look at the changes that the infrared brick design has been through. This will show how as the need for brick integration arose the individual design considerations were forgotten and replaced with a system that would work with every sensor.

The Brick Concept:

The brick concept is the idea of designing a sensor system such that all components needed to run the system are contained with in one box or a brick. This

means that batteries, computer, power supply, sensor, and communications are all contained inside this brick. The ultimate goal of the brick idea is to be able to flip a single switch and have all components ready to operate. One switch flipped and the brick is ready to operate as a standalone sensor system. The following table helps to illustrate the brick concept.

SENSOR BLOCK	PRE-PROCESSING & FUSION BLOCK	COMMUN-ICATION BLOCK
(Thermal Camera)	(Simple Pre Processing and Fusion operations on acquired data)	(802.11g W-LAN standard to transfer data between the brick CPU and the host computer)
POWER BLOCK		
(12V battery and 12V –7.5V/18.5V dc –dc converter for the camera/ 12V –24V dc –dc converter for the scanner)		

Early Design Considerations:

From day one, the main design criteria for the infrared thermal imaging brick were smaller size and reduced power consumption. Working under these criteria, two possible designs were conceived. The first was a mid-range cost design on the order of about $1000. This system would include a Pentium M processor with a Mini-ITX form factor mainboard. For memory, a 4GByte microdrive, same form factor as Compact Flash memory, would be used with 1 GByte of RAM. This system would use an IEEE 802.11g wireless adapter. The current Panasonic Lead-Acid 12V batteries would supply the power. The advantages of this design were an increase in battery life and a decrease in size while creating a completely modular enclosure. One ON/OFF switch is all that is needed to control the box. However, battery life is not greatly increased and due to the large size of the Panasonic batteries, height reduction of the brick is not possible.

Mid-Range Design Parts	
Component	**Cost**
Commell LV-671 Mainboard	$304.50
Hitachi GST 20 Gbyte Hard Drive	$72.99
1 Gbyte PC3400 Mushkin RAM	$179.99
1.6 GHz Pentium-M Processor	$210.00

EA1046(51) Battery Charger	$69.99
PST-ED1060-19 12V-19V Conv.	$79.99

The other design was a higher cost one with a price on the order of $2800. This system would feature a Pentium M processor with a PC/104 mainboard. A 4 GByte Flash Memory card and 1 GByte of RAM would be used for memory. This system would include the same wireless card as the previous design. This system would use a much smaller Nickel Metal Hydride (Ni-mH) or a Lithium Ion battery system to meet the power requirements. This design was capable of greatly reducing the size of the brick while increasing battery life even more. The system can still be operated by one switch. However, due to the different type of battery, a new charging system for the batteries would have to be obtained. Both designs featured the existing infrared thermal camera.

High-end Design Parts List	
Component	**Cost**
MSM855 PC/104 Mainboard	$417.00
Logic Board for Mainboard	$1,211.00
Heatsink for Processor	$54.00
4 Gbyte Microdrive	$187.95
1024 Mbyte PC3400 Mushkin RAM	$179.99
EA1046(51) Battery Charger	$69.99
PST-DE-12-5 Voltage Converter	$120.00
PCMCIA PC/104 adaptor	$174.10

These designs were presented to Dr Abidi. He indicated that he was interested in a couple of other ideas as well, such as the ability to hot swap batteries. This would allow you to change one battery while the system continued to run on the other. He was also interested in being able to run the system off an AC source and an external DC source as well.

Group Integration:

At this meeting, Dr Abidi expressed interest in integrating the three sensor brick groups. If all three groups could develop and implement a system based on standardized hardware, then any sensor could be adapted to any brick. With this setup, for example, if one brick had a malfunction, that sensor could be placed on another brick so that the sensor could still be used. This made it necessary for all three groups to meet and come up with a set of hardware criteria that everyone could live with. All components were discussed and over the next couple of weeks we arrived at a system that would work for everyone. This included batteries, motherboards, processors, enclosures, and power systems. One of the more interesting aspects of this design is the case itself. The boxes are all standardized at the same size with each sensor having a specialized lid. In order for this to work, each group had to attach their sensor along with the hardware necessary

to operate the device to the lid. Because of this the bricks are both modular and interchangeable with one another.

Final Design:

The final design for the standardized sensor bricks has the following components:

- 1.6 GByte Pentium M processor
- 1 GByte RAM
- 20 GByte Hard Drive
- 2 12V Panasonic Pb-Acid batteries
- 150W AC-DC converter
- ATX Power Supply
- PCI Video Card
- Wireless
- Mainboard

Also included is a DC-DC converter that changes the 12V from the battery to the voltage that corresponds to the particular sensor; 7.5V for the thermal sensor, 18V for the visual sensor, and 24V for the laser range finder.

Component Name	Product Name	Price
Motherboard	IB880F Motherboard	$310
	ID240 Daughterboard (RJ45)	$28
Accessories	IB18A Cable Kit	$35.00
	20 Pin ATX extension cables	$5.95
	2.5" - 3.5" IDE cables	$11.46
	Flex riser cards for PCI	$22
Chip	Intel Pentium M 735 1.7 Ghz	$250
RAM	184-Pin 1GB ECC Registered DDR	$165.32
Hard-disk	Seagate 40GB 5400 rpm notebook harddrive	$75
W-LAN Card	Intel 802.11a/b/g M-PCI PRO Wireless	$33
AC - DC Converter	Astrodyn AC to DC Converter (Rectifier) (LPP150-13.5 member of the family)	$72
CPU Fan	ICooL001 22mm Low-Profile Pentium M CPU Heatsink/Cooler	$25
Enclosure	Custom made stainless steel enclosure 18" X 18" x 6"	$150
PCI Video capture cards	xxx	$150
12v - 7.5v converter	Half Size VI-LJOR-EZ (12v - 7.5v)	$114
External Antennas	xxx	$50
Miscellaneous	Fans/Wires/Switches/Plugs/etc.	$50

Total	xxx	$1,546.73

The thermal brick will cost us	$1,546.73

Thermal Brick Electrical Layout

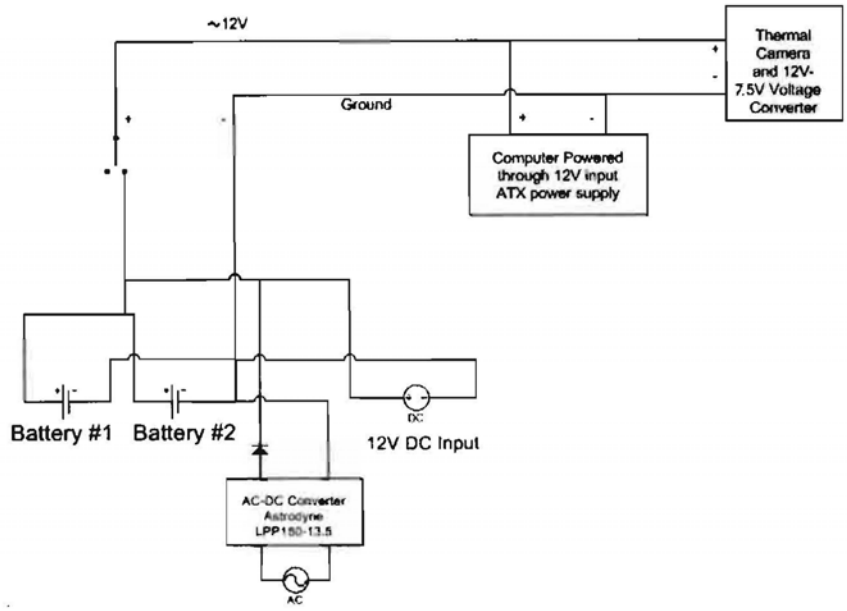

Troubleshooting:

There were a couple of design errors that manifested themselves when we assembled the hardware. The first issue was that of our ATX power supplies for the computers. We had chosen them because of their superior input voltage tolerance and the fact that they were compatible with our motherboard and a Pentium-M processor. However, when we powered up the motherboard using this supply, it self-destructed, burning one of the power MOSFET's. This appears to be a manufacturer defect as we verified the correct configuration on the other two supplies and they burned as well. Given this setback, Justin offered his power supply that we had used to initially test the motherboard. Although these had a smaller input voltage tolerance, they functioned flawlessly.

The other issue we ran into was that of the AC adapter. When the adapter was not energized, it had a small enough resistance that the battery would drain significant current into it, wasting power and possibly damaging the device itself. The solution that we had devised for this was a car relay, connected such that it was self-triggered (i.e. when power was applied that voltage was used to energize the relay). However, we found a bug in this solution when we were testing the power system. The relay would automatically engage when we applied power, but it would not disengage when we removed the power. As it turns out, the battery was feeding just enough voltage back through the now closed

switch of the relay to keep the electromagnet energized. In this condition, the relay would remain on until the battery died, a far from optimum situation. After studying the situation, we decided that a high-current power diode would be the best solution. This diode would pass all current originating in the AC adapter while blocking all attempts by the battery to discharge back through it. We tested this solution and it worked flawlessly.

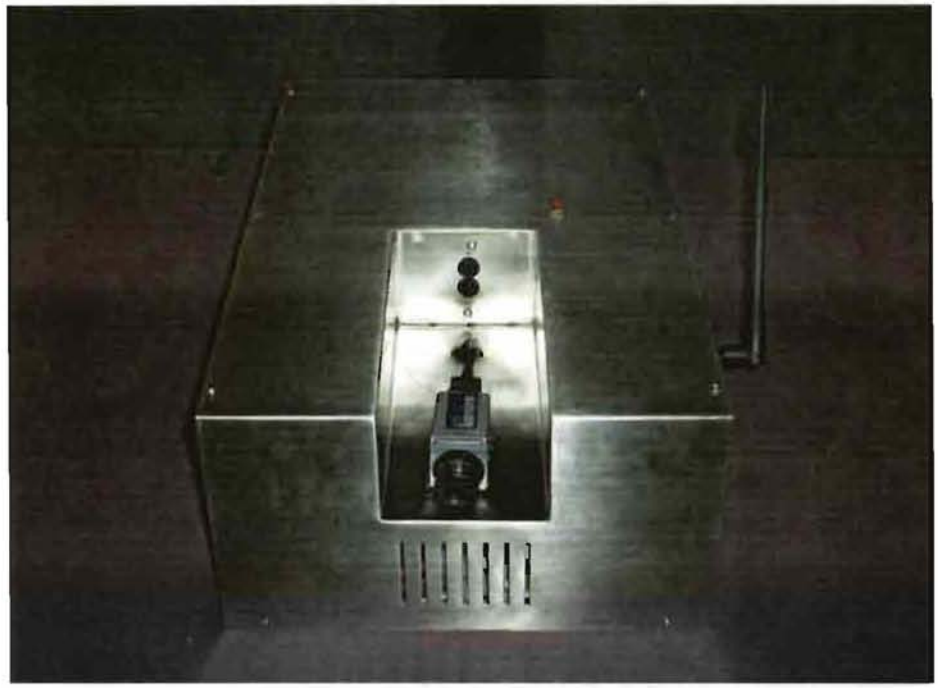

Figure 3: Completed box.

Results of Testing:

There was very little time for testing the box due to the fact that the box was not complete and fully functioning until the final week of the project. However, in running the box off of the different supplies, some interesting phenomena of note occurred. First of all, the voltage being output by the new ATX supply for the 12V rail was the same as the 12V bus being fed in. This meant that when the box was run off of a battery the voltage was around 12V but when the box was run off of the AC line, the voltage hovered around 12.5V. This means that the 12V rail of the power supply is probably unregulated. This should not be an issue unless a severe undervoltage (a dead battery) or overvoltage (unlikely, but will probably blow a fuse before it becomes a problem) is applied to the brick.

Another effect that was observed was that when the batteries were poorly charged and the AC supply was energized, a large current of around 6 amps was observed to flow from the AC supply to the batteries to recharge them. This means that if the computer and camera are also running, the box will be operating very close to capacity. In this situation, good airflow through the box is essential to keep the power diode cool as all of the

current must be conducted through it. If there is a spike in PC usage during this condition, it is possible that the current will exceed 10 amps and the circuit fuse will blow to protect the diode and AC supply from damage.

In the same line as the previous issue, if a battery hotswap is performed with two highly unmatched batteries (i.e. the battery open-circuit voltages differ by more than a volt), a large current will attempt to circulate between the two batteries to equalize the voltages. Once again, if the batteries are fully loaded by the computer and camera the sum of the operating current and the circulating current may exceed 10 amps and the circuit fuse will blow to protect the batteries and wiring from damage.

Description of the Design

With this redesign, we have successfully included a computer system more powerful than the original thermal imaging brick design in a significantly reduced size package. For the purpose of minimizing power consumption while still giving a suitable level of computing power, we chose to use an Intel Pentium-M microprocessor on a 5.25" single board computer platform. In addition, we feel that the use of a separate mainboard provides additional flexibility for future expansion over the use of a laptop computer. We also went with a PCI based video capture card, which allows for an optimum power usage to digitize the video feed from the camera.

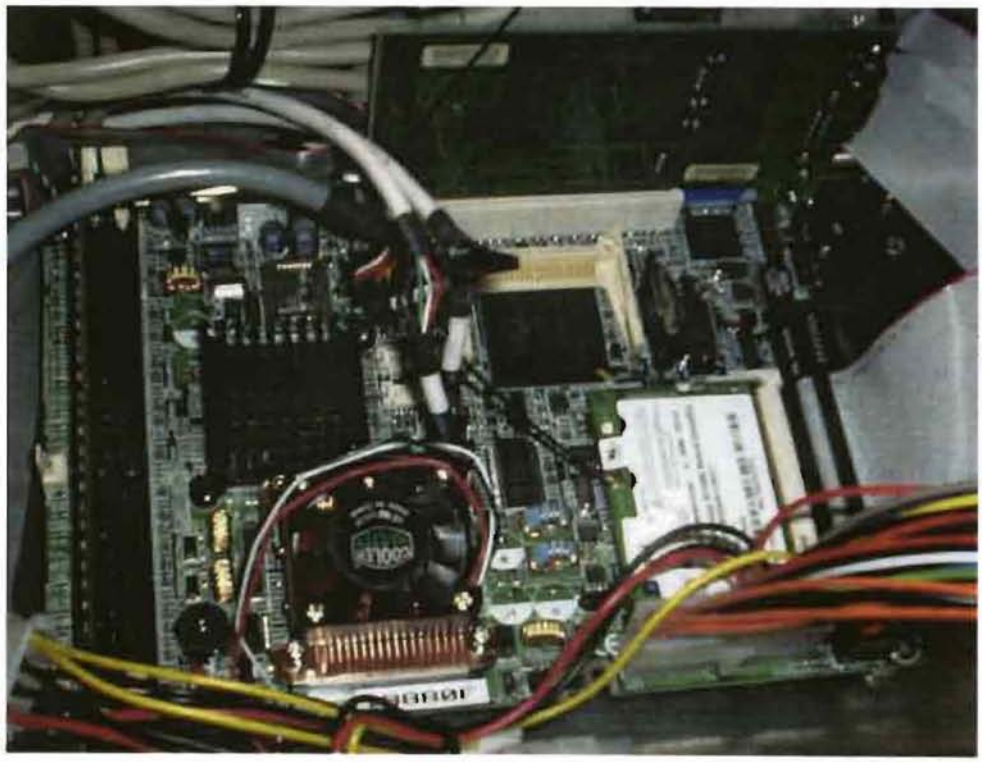

Figure 4: Mainboard in box.

We wanted to make the power system for this box as flexible as possible, allowing the box to be operated from a wide variety of power sources. For standalone use, we have chosen to use the existing Panasonic 12-V batteries used by the other IRIS lab boxes. In order to provide an enhanced battery life and the option for hot-swapping a fresh battery, we used a dual battery system with a simple connector. We also included an AC-DC converter to allow the box to be powered from a standard wall outlet. While the box is running on AC power, the voltage output is 13.5V, which allows the batteries to charge during use. Finally, we included a set of banana jacks to allow an external 12V power line to run the box, which, for instance, allows the box to be powered off a car battery.

Figure 5: Batteries, fuse block, and ground bus bar.

The system is wired in such a way that each power supply is fused for protection, and they all run to a central switch and power bus, allowing for easy expansion in the future. The system is also wired so that it will automatically pull its power from the source best able to provide the current, so that if the batteries are low and it is plugged in to the AC line, it will switch from using the battery power to the AC power without any extra user intervention. From the main 12V bus, the power is routed through DC-DC converters to provide the necessary voltage for each component in the box. Any future expansion can easily be accommodated as long as it can be operated from an unregulated 12V system.

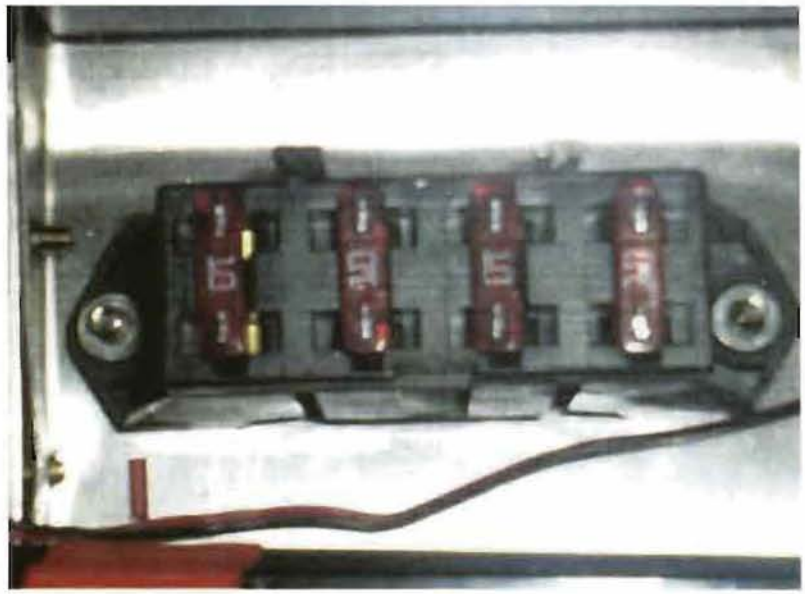

Figure 6: Fuse Block for Power Bus

The box is constructed from stainless steel, which allows it to be very strong and robust. All the necessary connections for computer operation are easily accessible at the rear of the box to permit easy use of a monitor and keyboard. In addition, an 802.11b/g wireless Ethernet card is included for ease of remote operation. The box's size of 10" by 15" by 6" is a significant reduction from the previous version of the box; with a slight extension of the Safebot, it will be possible to use two of these bricks with different sensors at the same time.

Finally, the boxes for the three sensors (thermal, visual, and range) have been standardized. Each sensor has a different lid designed to meet its needs, but the lids are interchangeable among the boxes. Should one box become inoperable, it would be possible to swap the lid to a different box. This will also permit the demonstration of all three types of sensors while only traveling with a single heavy box.

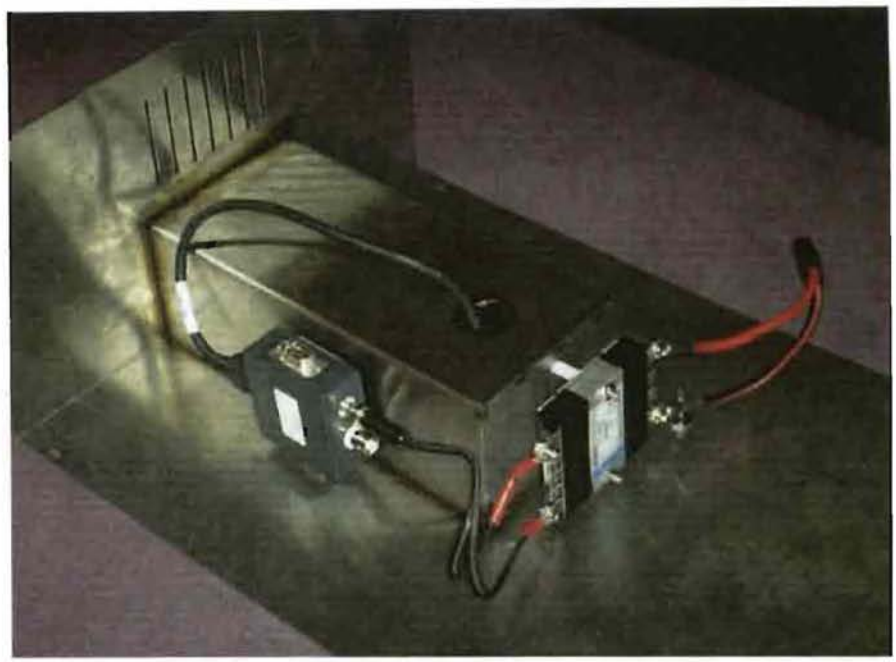

Figure 7: Lid showing power converter for camera and camera connection box.

Future Work

We feel that this box size is the smallest possible with these components and features. The box has enhanced features over the previous design of the thermal brick, while being significantly smaller. The system is still self-sufficient, but also has ample methods to power from an external source should this become necessary.

One of the largest consumers of size in the box is in the batteries. It will be extremely difficult to appreciably reduce the size and weight while still using a dual battery system with the existing Panasonics. We believe that if an appropriate battery with a higher power density than sealed lead acid is selected, this will allow the box to maintain a reasonable lifetime per charge while also allowing the size of the box to be significantly reduced.

In addition, one area we have not pursued was the software. In changing to a separate mainboard, we changed to a PCI based video capture card that will require a partial re-write of the software. While the GUI is likely still usable, the software will require new drivers and interface methods to use the PCI. Once this is completed the thermal imaging brick will be a fully functional, self-sufficient device.

Figure 8: Image of the group produced by the new thermal brick.