To the Graduate Council:

I am submitting herewith a thesis written by Jeffrey B. Sharpe entitled, "Analysis, Design and Testing of a Centrifugal Pendulum Absorber." I have examined the final copy of this thesis for form and content and recommend that it be accepted in partial fulfillment of the requirements for the degree of Master of Science, with a major in Mechanical Engineering.

Frank H. Speckhart, Major Professor

We have read this thesis
and recommend its acceptance:

Accepted for the Council:

Associate Vice Chancellor
and Dean of the Graduate School

ANALYSIS, DESIGN AND TESTING OF A CENTRIFUGAL PENDULUM ABSORBER

A Thesis

Presented for the

Master of Science

Degree

The University of Tennessee, Knoxville

Jeffrey Bruce Sharpe

May 1993

Copyright © 1993 by Jeffrey Bruce Sharpe

All Rights Reserved

DEDICATION

This thesis is dedicated to God, the source of my strength.

> I can do everything through him who gives me strength. Philippians 4:13

> May our Lord Jesus Christ himself and God our Father, who loved us and by his grace gave us eternal encouragement and good hope, encourage your hearts and strengthen you in every good deed and word. 2 Thessalonians 2:16,17

Both quotations were taken from the Holy Bible (New International Version).

ACKNOWLEDGMENTS

I would like to thank my major professor, Dr. Frank Speckhart, for his guidance in preparing this thesis. Though a patient man, he was probably as relieved as I was when it was completed. I would also like to thank my other committee members, Dr. Stanley Becker, Dr. Grzegorz Kawiecki and Dr. Clement Wilson for their assistance with this thesis and throughout my time in graduate school. I would like to offer a special thanks to Mike Kennedy, the greatest single source of information and helpful advice in the Engineering Design Center. Having his company while working on this thesis made the task easier to bear.

I never would have made it past the first grade if my loving parents had not tried to raise me right. So I credit them with providing me a wonderful environment in which to grow-up. They think I turned-out pretty well, but they always were biased. Finally, I would like to thank Teresa for her constant support and encouragement and for patiently listening to all my thesis stories.

ABSTRACT

This thesis was a feasibility study of a centrifugal pendulum absorber, designed by Frank H. Speckhart for reducing torsional vibrations in racing engines. Evaluation of this absorber was accomplished in two ways: a simple computer model was established, and the nonlinear equations of motion governing the absorber were solved numerically; and a model and a prototype of the absorber were constructed and tested. The results of the computer simulation of the simple model showed the absorber to significantly reduce torsional vibrations within certain limits of engine torque and speed, which were directly related to the dimensions of the absorber. Outside these limits, the simulation revealed a magnification of torsional vibrations. The simulated performance of the absorber was compared to that of a viscous-fluid damper. The damper provided no significant reduction in torsional vibrations. The prototype absorber test was inconclusive. The model absorber test, which was conducted at a single combination of engine speed and torque, revealed significant reduction in torsional vibrations. For certain operating conditions, there appeared to be a contradiction between the computer and experimental results. This led to the conclusion that the computer model may inadequately have represented a realistic engine system. It was also concluded that the absorber merited further study and testing, having been shown to be very effective under certain conditions. Suggestions were made for additional study and testing of the existing design. Recommendations were given for improvements in the existing design as well.

TABLE OF CONTENTS

1. INTRODUCTION 1
Background 1
A Brief Comparison: Viscous-fluid Damper vs. Centrifugal Pendulum Absorber 2
One Configuration of Centrifugal Pendulum Absorber 4
Outline of Objectives 5
Method of Attack 6

2. DYNAMIC ANALYSIS OF THE CENTRIFUGAL PENDULUM ABSORBER 9
Natural Frequency 9
Opposing Torque 11
Coefficient of Friction 12
Equations of Motion 13

3. COMPUTER SIMULATION OF THE PERFORMANCE OF THE SPECKHART ABSORBER 15
Method of Evaluation 15
Means of Evaluation 16
The Idealized Engine 16
Optimizing the Speckhart Absorber 17
Simple Absorber vs. Speckhart Absorber 18
Viscous-fluid Damper vs. Speckhart Absorber 22
Speckhart Absorber Performance Study 28
Defining the Operating Space 29
Effect of Size 31
Effect of Pendular Mass Frequency 31
Sensitivity of Nonlinearity 34

4. TESTING OF THE SPECKHART ABSORBER 37
Prototype Absorber Test 37
Model Absorber Test 39

5. CONCLUSIONS 45
Overview 45
Computer Simulation of Speckhart Absorber Performance 45
Testing 47
Testing of Prototype Absorber 47
Testing of Model Absorber 47

6. RECOMMENDATIONS 49
Design Improvements 49
Absorber Size 49
Increased Pendular Mass Frequency 50
Critical Dimensions 51
Materials 51
Some Ideas for Further Study 51
Computer Simulation 51
Testing 52

BIBLIOGRAPHY 54

APPENDICES 56
A: U.S. Patent No. 2346972 (assignor: Floyd F. Kishline) 57
B: Prototype Absorber Drawings 62
C: Natural Frequency Derivation 65
D: Opposing Torque Derivation 70
E: Coefficient of Friction Derivation 73
F: Engine Torque Derivation 76
G: Equations of Motion Derivation 82
H: Damper Equations of Motion Derivation 86
I: Sample Data 95
J: Strength Analysis 102
K: Absorber-optimizing Program 107
L: Phase of Swing Angle Study 115
M: Numerical Solver 119
Basic Code 120
Simple Accuracy Test 123
Program Variants Used in Thesis 124

VITA 142

LIST OF FIGURES

FIGURE		PAGE
1.	Schematic Cross-section of a Viscous-fluid Damper	2
2.	Schematic of a Simple Centrifugal Pendulum Absorber	3
3.	The Centrifugal Pendulum Absorber of Frank H. Speckhart	4
4.	Comparison of Motion of Two Absorbers	5
5.	Comparison of Swing Angles of Two Absorbers (M = 10 ft-lb)	19
6.	Comparison of Opposing Torque of Two Absorbers (M = 10 ft-lb)	19
7.	Comparison of Engine Speed of Two Absorbers (M = 10 ft-lb)	20
8.	Comparison of Swing Angles of Two Absorbers (M = 150 ft-lb)	21
9.	Comparison of Opposing Torque of Two Absorbers (M = 150 ft-lb)	21
10.	Comparison of Engine Speed of Two Absorbers (M = 150 ft-lb)	22
11.	Performance of 8-Inch Viscous-fluid Damper (K = 222300 in-lb/rad)	23
12.	Performance of 8-Inch Viscous-fluid Damper (K = 1000000 in-lb/rad)	24
13.	Performance of 8-Inch Damper Coupled to Engine (K = 222300 in-lb/rad)	25
14.	Performance of 8-Inch Damper Coupled to Engine (K = 222300 in-lb/rad)	26

15. Performance of 8-Inch Damper Coupled to Engine (K = 1000000 in-lb/rad) 26

16. Comparison of Damper and Absorber (M = 10 ft-lb) 27

17. Comparison of Damper and Absorber (M = 150 ft-lb) 28

18. Operating Space of Speckhart Absorber 30

19. Speckhart Absorber Performance Under Racing Conditions 30

20. Maximum Swing Angle Under Racing Conditions 31

21. Operating Space for Range of Absorber Sizes 32

22. Effect of Changing Pendular Mass Frequency (M = 10 ft-lb) 33

23. Effect of Changing Pendular Mass Frequency (M = 150 ft-lb) 33

24. Effect of Changing Pendular Mass Frequency (M = 300 ft-lb) 34

25. Sensitivity of Equations of Motion to Nonlinearity (ω = 6000 rpm) 35

26. Sensitivity of Equations of Motion to Nonlinearity (ω = 6000 rpm) 36

27. Predicted Opposing Torque Capability of Prototype Absorber 44

28. Model Absorber of Frank H. Speckhart 39

29. Model Absorber of Frank H. Speckhart (other side) 40

30. Model Absorber of Frank H. Speckhart (pendular masses exposed) 40

31. Model Absorber Performance With Pendular Masses Removed (ω = 818 rpm) 42

32. Model Absorber Performance With Pendular Masses Fixed (ω = 811 rpm) 43

33. Model Absorber Performance With Pendular Masses Free to Oscillate (ω = 810 rpm) 38

34. Simulated Performance of Flywheel Absorber 49

35. Performance of 8-Inch Absorber at Higher Natural Frequency 50

LIST OF SYMBOLS

Greek

Symbol	*Explanation/Definition*
α	crank angle between successive firings at top center
α_{cn}	α associated with a particular cylinder in multicylinder engines
β	sum of θ and ϕ (defined on page 12)
γ	angle of twist of crankshaft at damper end
$\Delta\omega_a$	intra-cyclic variation in rotational velocity of engine with absorber in place (simple or Speckhart absorber)
$\Delta\omega_d$	intra-cyclic variation in rotational velocity of engine with viscous-fluid damper in place
$\Delta\omega_e$	intra-cyclic variation in rotational velocity of equivalent-inertia engine alone
θ	angle of rotation of crankshaft
θ_w	absolute angle of rotation of pendular mass
μ	minimum coefficient of friction necessary (for rolling) between pendular mass and absorber body
ν_1	Poisson's ratio for absorber body material
ν_2	Poisson's ratio for pendular mass material
$\sigma_{b,i}$	maximum stress on inner edge of half-ring due to bending
$\sigma_{b,o}$	maximum stress on outer edge of half-ring due to bending
σ_H	contact or Hertzian stress between pendular mass and absorber body
ϕ	angle of swing of pendular mass about equilibrium position (see Fig. 2) also: angle of rotation of inertial mass in viscous-fluid damper

ϕ_n	angle coefficient for a 4-cycle engine from Taylor (1985)
ω	cycle-average rotational velocity of crankshaft
ω_n	natural frequency of pendular mass

Standard

Symbol	*Explanation/Definition*
a_N	normal component of acceleration of pendular mass
a_T	tangential component of acceleration of pendular mass
A_b	cross-sectional area of half-ring
b_H	constant used in calculation of contact stress (defined in Appendix J)
c_d	coefficient of damping for viscous-fluid damper
c_f	coefficient of internal friction between pendular mass and absorber body
c_i	distance between inside surface of half-ring and neutral axis
c_o	distance between outside surface of half-ring and neutral axis
cn	cylinder number
C	rolling position constant for pendular mass (defined on page 10)
d_1	diameter of cavity
d_2	diameter of pendular mass
e_b	distance between neutral and centroidal axes
E_1	modulus of elasticity of absorber body material
E_2	modulus of elasticity of pendular mass material
F_c	centrifugal force of pendular mass

F_N	normal component of force between pendular mass and absorber body
F_T	tangential component of force between pendular mass and absorber body
I	combined mass moment of inertia of all pendular masses
I_a	mass moment of inertia of absorber body (minus pendular masses)
I_c	mass moment of inertia of viscous-fluid damper casing
I_d	mass moment of inertia of inertial mass inside viscous-fluid damper casing
I_{eq}	equivalent mass moment of inertia of idealized engine plus that of balancing device (damper or absorber)
I_m	mass moment of inertia of motor, flywheel, clutch, etc ...
I_w	mass moment of inertia of single pendular mass
K	torsional stiffness of crankshaft
l	length of pendular mass
m	combined mass of all pendular masses
m_w	mass of single pendular mass
M	amplitude of driving torque
M(t)	driving torque from engine (time-varying)
M_b	bending moment of half-ring
$M_f(t)$	friction torque created by pendular mass rolling inside cavity (time-varying)
$M_{n\text{-only}}$	driving torque for a particular order only
M_o	opposing torque generated by all pendular masses
n	harmonic order of an internal combustion engine resulting from power pulses from cylinder(s)
NR	number of cavities/pendular masses

OD	outsider diameter
q_r	generalized coordinate
Q_{nc}	non-conservative force/torque
r_i	distance from center of curvature to inside edge of half-ring
r_n	distance from center of curvature to neutral axis
r_o	distance from center of curvature to outside edge of half-ring
r_w	radius of pendular mass (see Fig. 3)
r_1	radius of cavity (see Fig. 3)
r_2	radius of swing of pendular mass (see Fig. 4)
r_3	radius of cavity circle (see Fig. 3)
SRR	speed reduction ratio (defined on page 15)
t	time
T	kinetic energy
TP	torque potential (defined on page 17)
v_w	velocity of pendular mass
V	potential energy
W_n	amplitude coefficient for a 4-cycle engine from Taylor (1985)
x_o	margin between outer egde of cavity and outer edge of absorber body

CHAPTER 1

INTRODUCTION

Background

The rotation of the crankshaft in an internal-combustion engine is accomplished by means of the reciprocating motion of its pistons. As each piston contributes to the rotation of the crankshaft, it also creates a surge in its angular velocity. Several devices have been invented to reduce or eliminate these surges, called torsional vibrations. These devices are important because they help to increase bearing and crankshaft life, in addition to providing smoother engine operation. In general, these devices may be categorized as flywheels, dampers or absorbers. A more-detailed investigation into the problem of torsional vibration is given by Bremer (1979).

A flywheel increases the resistance to changes in angular velocity by increasing the inertia of the system, thereby increasing the amount of energy required to accelerate the system. A damper resists those changes through friction between a fluid or a suitable viscoelastic material and an inertial mass, both of which are encased and attached to the crankshaft. As the crankshaft accelerates, the velocity of the inertial mass lags behind, creating an opposing torque on the crankshaft through the viscoelastic medium. A vibration absorber

reduces torsional vibrations by creating a moment at the same frequency as the driving torque, but 180 degrees out-of-phase.

A Brief Comparison: Viscous-fluid Damper vs. Centrifugal Pendulum Absorber

One common type of damper is the viscous-fluid damper, which, as the name implies, uses a viscous fluid for the friction medium (see Fig. 1). While this damper is functional at all frequencies and harmonics, its effectiveness is frequency dependent. It reduces torsional vibrations by dissipating energy in the form of heat into the viscous fluid.

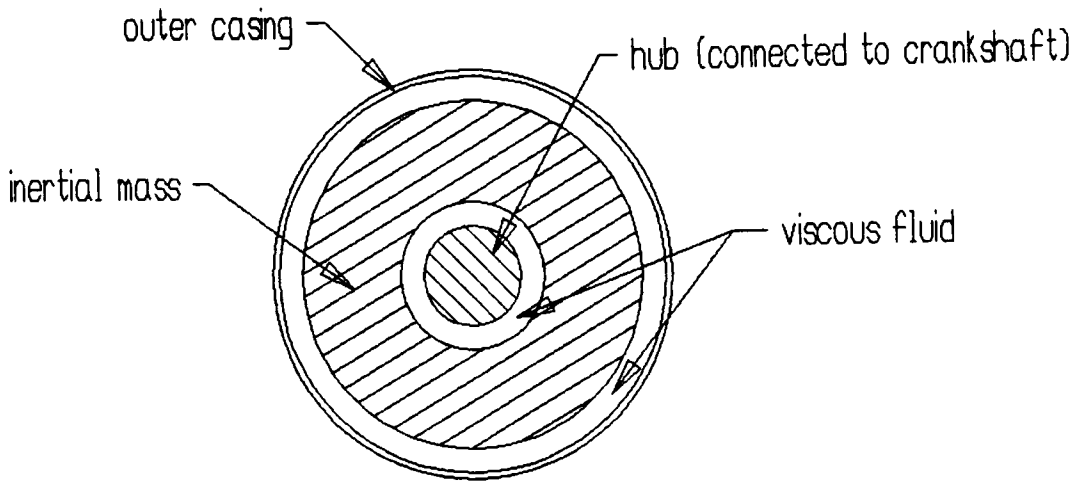

Figure 1 Schematic Cross-section of a Viscous Fluid Damper

The centrifugal pendulum vibration absorber (see Fig. 2) employs one or more pendular masses which are forced radially out from the crankshaft by centrifugal force and which

oscillate out-of-phase with the driving frequency. Because the natural frequency of this absorber is a function of its geometry and the driving frequency, the geometry of the absorber may be established such that the natural frequency is always equal to the driving frequency. The absorber can be designed to be effective at any first-order harmonic of torsional vibration.

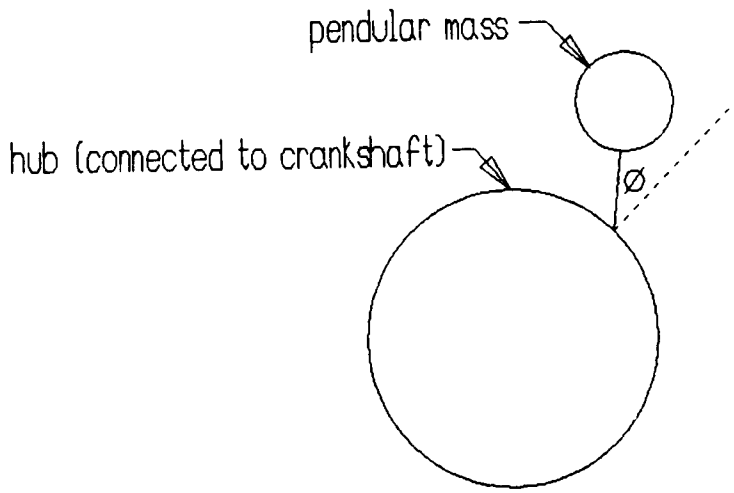

Figure 2 Schematic of a Simple Centrifugal Pendulum Absorber

The absorber, unlike the damper, loses essentially no energy to friction. Thus, a centrifugal pendulum absorber is expected to be more effective than a viscous-fluid damper.

One Configuration of Centrifugal Pendulum Absorber

Although it theoretically can be used, the arrangement of the pendular mass in Fig. 2 is impractical for use with automobile engines primarily because of space limitations. One alternative to the simple pendulum absorber is an absorber conceived by Frank H. Speckhart[1], as shown in Fig. 3. The pendular masses in this device mimic the motion of those for the simple absorber by rolling along the inside surfaces formed by the

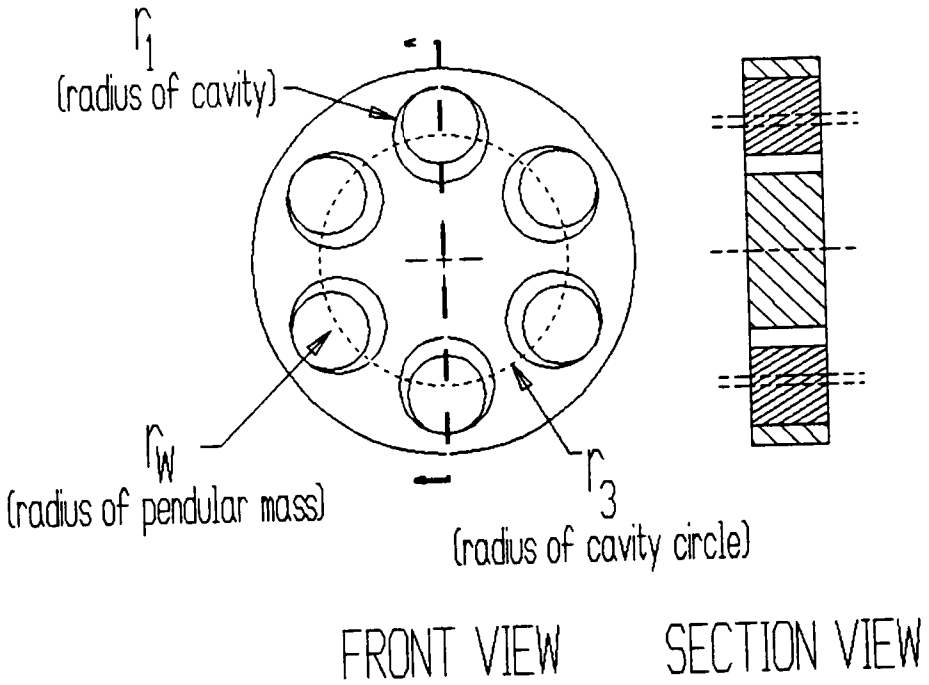

Figure 3 The Centrifugal Pendulum Absorber of Frank H. Speckhart

cavities; this motion is illustrated in Fig. 4. Appendix B contains the drawings which were used to construct a prototype of the Speckhart absorber.

[1] A similar device to Dr. Speckhart's was patented by Floyd F. Kishline in 1944. However, Mr. Kishline did not present the necessary equations of motion of the device in his patent to mathematically represent the performance of the absorber; without the equations of motion it is highly unlikely that anyone would prescribe the appropriate dimensions of an effective absorber. Mr. Kishline's patent is given for reference in Appendix A.

Outline of Objectives

The topic of this thesis is the analysis, testing and design of the centrifugal pendulum absorber conceived by Dr. Speckhart. The task was to derive the equations which govern the dynamic performance of the absorber, to simulate its performance by the numerical solution of the equations of motion and to compare that to the performance of a simple centrifugal pendulum absorber. The task was also to compare the performance to that of a viscous-fluid damper, conduct a performance study of the Speckhart absorber, and recommend means to improve the performance. Thus, the thesis was intended to describe the theory of operation, demonstrate the effectiveness in reducing torsional vibrations, and suggest a better design.

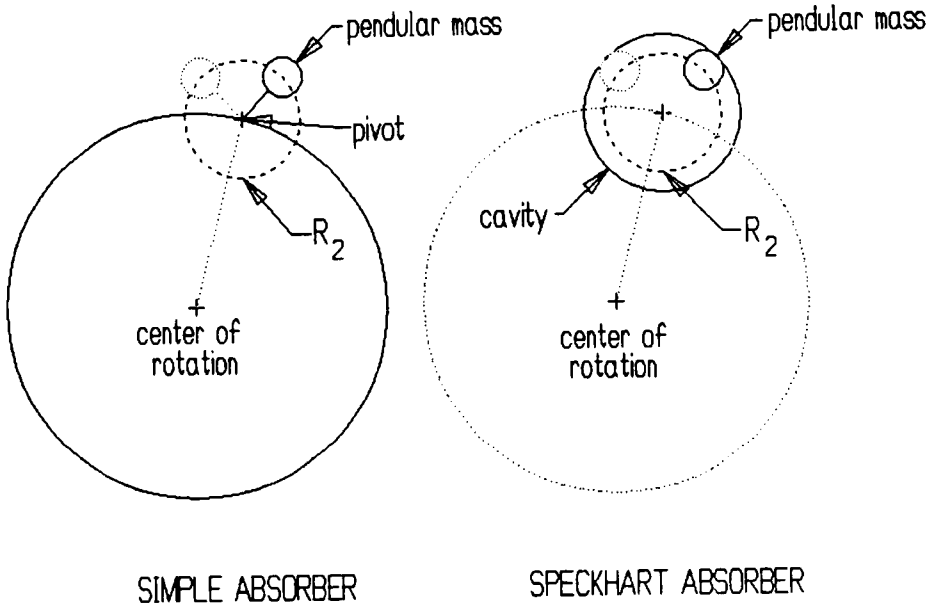

Figure 4 Comparison of Motion of Two Absorbers

Method of Attack

Three dynamic characteristics of the absorber were considered: the natural frequency of the pendular masses, the opposing torque provided by the masses and the minimum coefficient of friction necessary for the masses to roll without slipping. First was the natural frequency, which had to be tuned to the frequency of power strokes in the engine. Thus, it was necessary to solve for the natural frequency of the pendular masses as a function of the geometric proportions and the material composition. The important geometric parameters are shown in Fig. 3 and labelled r_w, r_1 and r_3. Second was the opposing torque provided by the masses, which is a function of the operating parameters and of the position of the masses. Next, it was necessary to calculate the minimum coefficient of friction for the masses to roll without slipping; if the masses slip, the equations describing the dynamic characteristics of the Speckhart absorber are invalid. Finally, the equations of motion were derived for each of four systems: an idealized engine; an idealized engine and a viscous-fluid damper; an idealized engine and a simple centrifugal pendulum absorber; and an idealized engine with the Speckhart absorber.

Before solving for the equations of motion, it was necessary to prescribe the dimensions and materials of a Speckhart absorber to be used in a computer model. A program was written to maximize the capability of the Speckhart absorber, taking into account the limits of the materials and the geometric parameters defined by the user. Within the program stress calculations were performed to make certain the Speckhart absorber withstands the forces it must endure. Approximations were made using traditional

strength of materials formulas and simplified absorber geometries, taking into account bending stresses. In addition, the contact stresses between the absorber body and the pendular masses were considered.

A computer program was used to simulate the dynamic motion for each of the systems just mentioned. The equations for the absorbers and engine were nonlinear and necessitated the use of a numerical solver. Therefore, a fourth-order, Runge-Kutta scheme with adaptive stepsize control was used. The basic Runge-Kutta algorithm was tested and its accuracy demonstrated. The amplitude of the net driving-torque was assumed, as was the engine inertia. The basic shape of the driving torque curve for the idealized engine was derived. The pertinent geometrical proportions and material properties were included in the programming. Thus, a computer model for each system was established.

Next the models were used to assess the effectiveness of the Speckhart absorber in reducing torsional vibrations. This was determined by comparing the results from the output of the programs for each system. In addition, Dr. Speckhart designed a model absorber for testing with a vibration analyzer, so that the benefit of the absorber could be more easily seen. The prototype device was tested on an engine used in a racing car, and the comments of those involved with testing this prototype were noted.

Finally, improvements to the original design were suggested. Using the computer model, the effect of increasing the dimensions of the absorber was seen. Thus, it was possible

to choose better absorber dimensions. Also, the computer model was used to demonstrate the sensitivity of the absorber performance to small deviations in its ideal dimensions; therefore, the critical dimensions were established. Further improvements and study were formulated as warranted by the results of the computer simulation and the testing.

CHAPTER 2

DYNAMIC ANALYSIS OF THE CENTRIFUGAL PENDULUM ABSORBER

Natural Frequency

To correctly specify the dimensions of an effective absorber, the formula for the natural frequency of the device were derived. Thus, the first step was to derive this formula for both the simple pendulum absorber and the Speckhart absorber.

Several assumptions were made concerning these absorbers. For the simple absorber, the masses were considered point masses. The inertial masses in the Speckhart absorber were assumed to roll without slipping. For the natural frequency calculations, both absorbers were assumed to have negligible internal damping. In addition, both absorbers were assumed to be statically balanced. Finally, the pendular masses were assumed to oscillate through "small angles" about their equilibrium positions.

Using the assumptions listed previously and Lagrange's equation, the natural frequency formula for the Speckhart absorber was derived (see Appendix C). The resulting formula is given, along with the formula for the simple absorber, as Eqns. 1 and 2 for the simple absorber and the Speckhart absorber, respectively. For Eqn. 2 the inertial masses were assumed to be solid right cylinders.

$$\omega_n = \omega\left[\frac{r_3}{r_2}\right]^{\frac{1}{2}} \tag{1}$$

$$\omega_n = \omega\left[\frac{r_2 r_3}{r_2^2 + \frac{1}{2}C^2 r_w^2}\right]^{\frac{1}{2}} \tag{2}$$

C from Eqn. 2 is defined by the following relationship:

$$C = 1 - \frac{r_1}{r_w}$$

To balance an 8-cylinder engine, which has four power pulses per revolution, the absorber is proportioned such that its natural frequency is four times that of the speed of the crankshaft. In symbols,

$$\omega_n = 4\omega$$

Eqns. 1 and 2 were customized for this application and simplified to show the necessary relationship between pertinent dimensions. Eqns. 3 and 4 are the result of this simplification and are given for the simple absorber and the Speckhart absorber, respectively.

$$r_3 = 16 r_2 \tag{3}$$

$$r_3 = 24r_2 = 24(r_1 - r_w) \tag{4}$$

Opposing Torque

The opposing torque generated by the pendular masses tends to counteract the fluctuations in engine torque acting on the crankshaft. Thus, the opposing torque serves as a measure of absorber effectiveness. The equation for the opposing torque of the simple absorber was taken from Eqn. 5.6-2 in Thomson (1988). The derivation of the opposing torque for the Speckhart absorber is given in Appendix D.

As was the case with the natural frequency derivations, assumptions were made at the onset of these calculations. The pendular masses for both absorbers were assumed to oscillate about their equilibrium positions with simple harmonic motion. In addition, the motion of the masses was assumed to be negligibly affected by energy losses due to friction.

The formulas for the opposing torque are given as Eqns. 5 and 6 for the simple absorber and the Speckhart absorber, respectively.

$$M_o = m\left[r_3^2\ddot{\theta}\sin^2\phi - r_3^2\dot{\theta}^2\sin\phi\cos\phi - r_2 r_3\dot{\beta}^2\sin\phi\right] \tag{5}$$

$$M_o = m\left[r_2 r_3 \sin\phi\,\dot{\beta}^2 - r_1 r_3 \sin\phi\,\dot{\theta}^2 - r_2\left(r_1 + r_3\cos\phi\right)\dot{\beta} - r_3\left(r_1\cos\phi + r_3\right)\ddot{\theta}\right] \qquad (6)$$

where θ is the crankshaft angle, ϕ is the swing angle and β is defined by

$$\beta = \theta + \phi$$

Applying the "small angle" approximation, namely: $\sin\phi \approx \phi$; $\cos\phi \approx 1$; and recognizing that θ is much greater than ϕ, Eqn. 5 is reduced to Eqn. 7.

$$M_o \approx m r_3\left(r_3 + r_2\right)\dot{\theta}^2\phi \qquad (7)$$

Note that, if Thomson's symbols for the pendulum torque, engine rotational speed and radii are used, Eqn. 7 becomes

$$M \approx m\left(R + r\right)n^2 R\phi \qquad (8)$$

which matches Thomson's Eqn. 5.6-7 exactly. Eqn. 6 cannot be reduced in a similar manner to Eqn. 5 because the angular acceleration of the pendular masses in Eqn. 6 is significant. This is demonstrated in Appendix I.

Coefficient of Friction

A key assumption made in the derivation of the natural frequency of the Speckhart absorber was that the pendular masses rolled without slipping inside the cavities. If the masses slip, the formula for the natural frequency is invalid. Thus, it was necessary to derive a formula for the necessary coefficient of friction between the masses and the

absorber body to substantiate this assumption. The details of the derivation are given in Appendix E.

The formula for the necessary coefficient of friction is given below and is obtained by dividing the magnitude of the tangential force by that of the normal force, created at the point of contact between the pendular mass and the absorber body.

$$\mu = \frac{\left| r_2\beta + r_3\dot{\theta}^2\sin\phi + r_3\ddot{\theta}\cos\phi \right|}{\left| r_2\beta^2 + r_3\dot{\theta}^2\cos\phi - r_3\ddot{\theta}\sin\phi \right|} \qquad (9)$$

This formula was used with a numerical methods program to validate the no-slip assumption already mentioned. Sample values of μ are included in Appendix I.

Equations of Motion

The equations of motion were obtained for each of four systems: an idealized engine; a viscous-fluid damper mounted to the crankshaft; an idealized engine and a simple centrifugal pendulum absorber; and an idealized engine with the Speckhart absorber. For this thesis, an idealized engine was taken to be one with a rigid crankshaft and no internal damping. The equations presented were derived for use with a numerical methods computer program to evaluate the performance of the Speckhart absorber. This evaluation is presented in the next chapter. The detailed calculations of this section are given in Appendix G. The expression for the engine torque is given in Appendix F.

The equation of motion for the idealized engine alone is given as Eqn. 10.

$$I_m\ddot{\theta} = M\sin(4\omega t) \tag{10}$$

The equations of motion for a viscous-fluid damper were taken from Thomson (1988) and are given as Eqns. 11 and 12.

$$I_c\ddot{\gamma} + c_d(\dot{\gamma}-\dot{\phi}) - K\gamma = M\sin(4\omega t) \tag{11}$$

$$I_d\ddot{\phi} - c_d(\dot{\gamma}-\dot{\phi}) = 0 \tag{12}$$

The equations of motion for the idealized engine and a simple centrifugal pendulum absorber are given as Eqns. 13 and 14.

$$\begin{aligned}\left(I_m + mr_2^2 + mr_3^2 + 2mr_2r_3\cos\phi\right)\ddot{\theta} + \left(mr_2^2 + mr_2r_3\cos\phi\right)\ddot{\phi} \\ = M\sin(4\omega t) + mr_2r_3\sin\phi\dot{\phi}(2\dot{\theta}+\dot{\phi})\end{aligned} \tag{13}$$

$$\left(mr_2^2 + mr_2r_3\cos\phi\right)\ddot{\theta} + mr_2^2\ddot{\phi} = -mr_2r_3\sin\phi\dot{\theta}^2 - 2\zeta\omega mr_2^2\dot{\phi} \tag{14}$$

The equations of motion for the idealized engine and the Speckhart absorber are given as Eqns. 15 and 16.

$$\begin{aligned}\left(mr_2^2 + mr_2r_3\cos\phi + IC\right)\ddot{\phi} + \left(mr_3^2 + mr_2^2 + 2mr_2r_3\cos\phi + I + I_m + I_a\right)\ddot{\theta} \\ = mr_2r_3\sin\phi\dot{\phi}(2\dot{\theta}+\dot{\phi}) + M\sin(4\omega t)\end{aligned} \tag{15}$$

$$\left(mr_2^2 + IC^2\right)\ddot{\phi} + \left(mr_2^2 + mr_2r_3\cos\phi + IC\right)\ddot{\theta} = -mr_2r_3\sin\phi\dot{\theta}^2 - c_f\dot{\phi} \tag{16}$$

CHAPTER 3

COMPUTER SIMULATION OF THE PERFORMANCE OF THE SPECKHART ABSORBER

Method of Evaluation

The purpose of an absorber or damper is to provide smoother engine operation. For this thesis, the measure of smooth engine operation is defined as the speed reduction ratio (SRR). The SRR is the ratio of intra-cyclic variation in the crankshaft rotational velocity at steady-state of the engine with an absorber or damper in place to that of an equivalent engine alone. In symbolic form,

$$SRR = \frac{\Delta\omega_{a,d}}{\Delta\omega_e} \tag{17}$$

where a, d and e denote the absorber, the damper and the engine, respectively, and where

$$\Delta\omega_e = \frac{M}{2\omega I_{eq}} \tag{18}$$

Equation 18 states that the intra-cyclic variation in engine speed for an equivalent engine alone at steady-state is a function of the amplitude of engine torque (M), the cycle-average engine speed (ω) and the equivalent inertia of the idealized engine and balancing device (I_{eq}). The equivalent inertia is used so that any improvement in the performance

of the engine cannot be attributed solely to increased inertia. The derivation of Eqn. 18 is given in Appendix F.

Means of Evaluation

Because the equations of motion for the centrifugal pendulum absorbers are nonlinear, a numerical method was necessary to simulate the performance of both the Speckhart absorber and the simple absorber. A fourth-order, Runge-Kutta scheme with adaptive stepsize control was selected from Sprott (1991). The basic program and its variants are given in Appendix M, along with a simple test of its accuracy.

The computer simulations were performed using IBM™ personal computers (models 70 and 80). The software used was Microsoft™ QuickBASIC 4.5.

The Idealized Engine

The engine modeled in the computer simulations was a simplified one, having a rigid crankshaft, except where otherwise specified. For this study, an 8-cylinder, internal combustion engine with even firing intervals was used. The resulting crankshaft torque was taken to be a simple sinusoid at four times the crankshaft rotational velocity, as demonstrated in Appendix F. The inertia of the engine was estimated to be 5 in-lb-s^2 for a typical racing engine having a flywheel diameter of approximately 16 inches.

Optimizing the Speckhart Absorber

Except for the Speckhart prototype absorber, the absorbers evaluated in this thesis were optimized using the computer program listed in Appendix K. Based on user-defined geometrical restrictions, material properties and maximum engine speed, this program iteratively finds the configuration of absorber which is capable of providing the most opposing torque (i.e. best performance) without exceeding any material strength limitations. The potential for opposing torque (TP) at a constant speed was determined from Eqn. 6 and is given by

$$TP = mr_2(r_1 + r_3)\beta \tag{19}$$

The angle ϕ, from Eqn. 6, was assumed to be small and the acceleration of ϕ was assumed to be significantly greater than that of the crankshaft angle, θ -- see Appendix I. Thus, the dominant term from Eqn. 6 became

$$-mr_2(r_1 + r_3\cos\phi)\ddot{\beta}$$

which, when simplified using the above assumptions, led to Eqn. 19. The strength requirements were calculated using Eqns. J1 and J3 from Appendix J.

The table below lists an optimum geometrical configuration for absorbers with several potential outside diameters. All dimensions are given in inches. For these absorbers, the pendular masses are 1 inch long, the absorber body is made of wrought aluminum (2014-T6), the pendular masses are made of high strength brass (C62400) and the maximum

engine speed is assumed to be 10000 rpm. Further references to these absorbers will be made by giving only the value of outside diameter.

OD	r_3	r_1	r_w	NR
7	2.223	.776	.6834	7
8	2.616	.812	.703	8
9	2.698	.982	.8696	7
10	2.71	1.166	1.0531	6

Simple Absorber vs. Speckhart Absorber

The simple and Speckhart absorbers were compared to verify that the Speckhart absorber behaves like a centrifugal pendulum absorber. Because the two absorbers, having the same r_3 and ω_n, do not have the same r_2, it was necessary to equate their capability, at least approximately. This was done using the following relationship

$$\left[m_w(r_2 + r_3)\omega_n^2\right]_{simple} = \left[m_w(r_2 + r_3)\omega_n^2\right]_{Speckhart}$$

which states that the centrifugal force on the pendular mass for constant engine speed must be the same for both the simple and Speckhart absorbers for them to have approximately equivalent capability. Using this relationship, a simple absorber equivalent to the 8-inch outside diameter, Speckhart absorber has $r_2 = 0.1635$ inches and $r_w = 0.6961$ inches, with the other parameters remaining the same. Figures 5 - 7 show typical response for steady-state motion for the simple and Speckhart absorbers. These figures

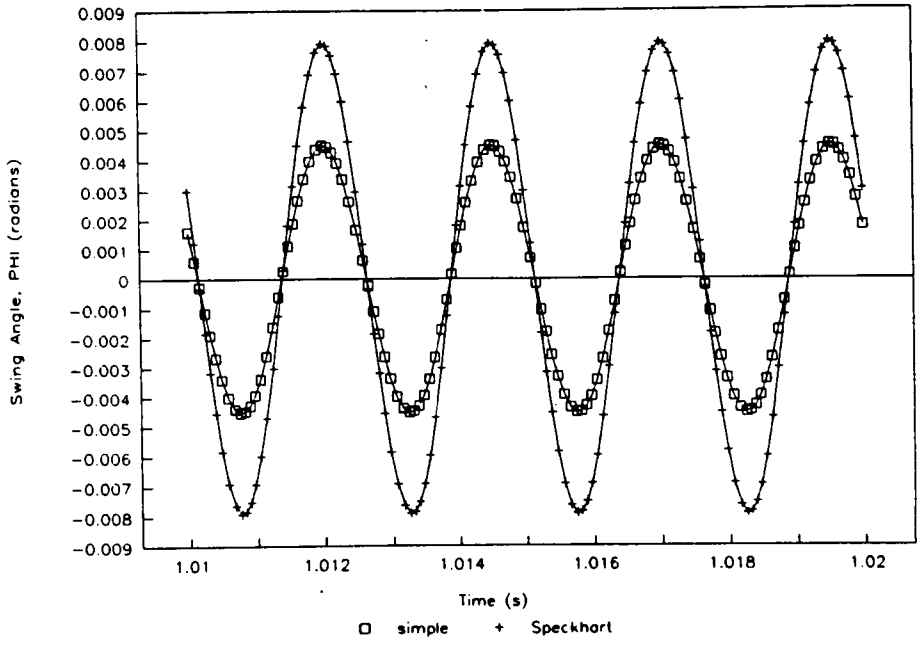

Figure 5 Comparison of Swing Angles of Two Absorbers (M = 10 ft-lb)

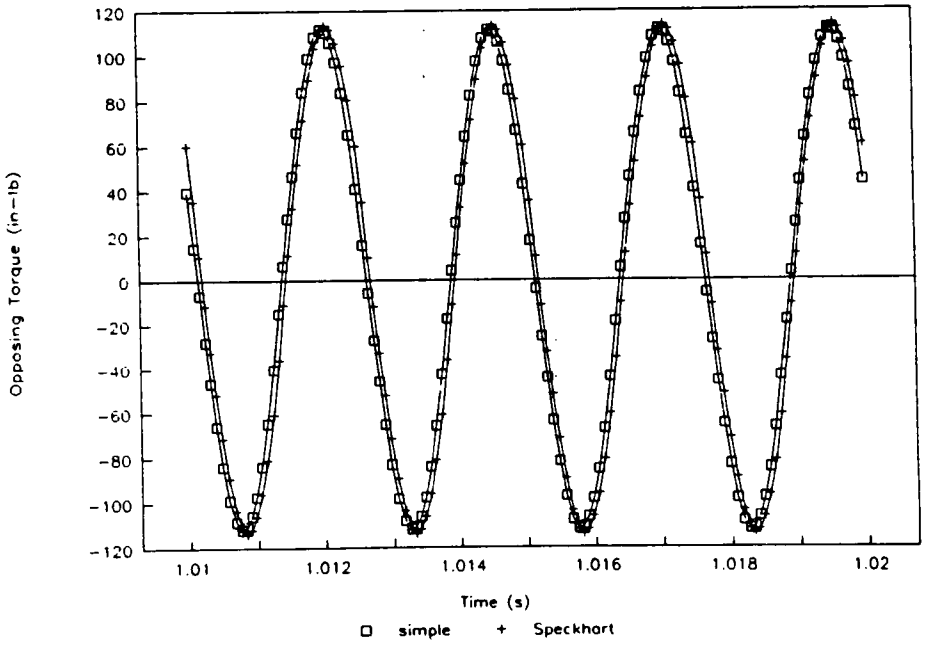

Figure 6 Comparison of Opposing Torque of Two Absorbers (M = 10 ft-lb)

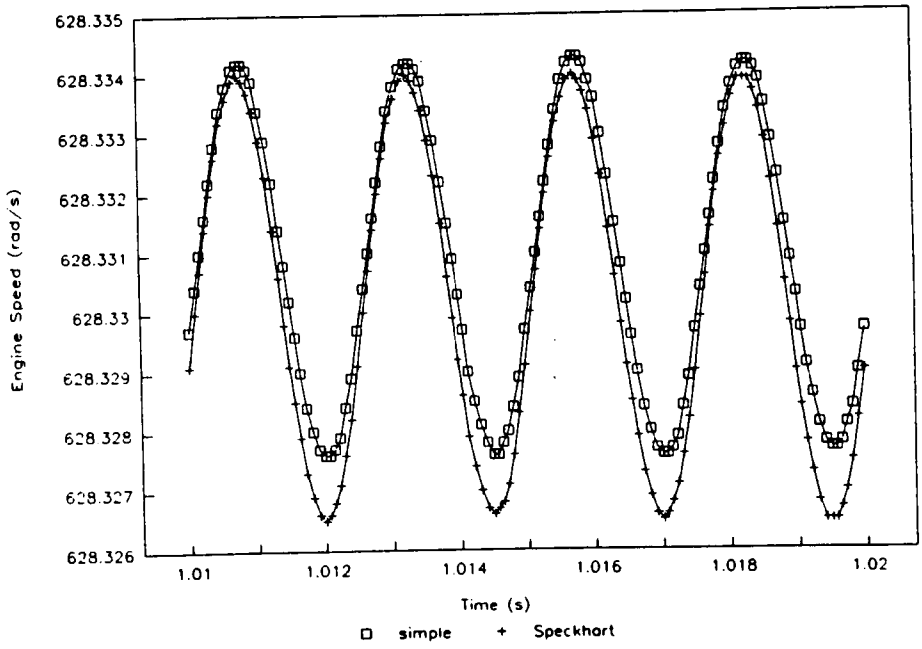

Figure 7 Comparison of Engine Speed of Two Absorbers (M = 10 ft-lb)

demonstrate that for low engine torque the Speckhart absorber performs similarly to the simple absorber. Figure 5 shows that the pendular masses in the Speckhart absorber must oscillate through a greater angle than do those in the simple absorber to achieve the same amount of opposing torque. Also, the simple absorber provides a slight improvement in speed reduction over the Speckhart absorber, as shown in Fig. 7. For higher values of engine torque, the Speckhart absorbers ceases to mimic the behavior of the simple absorber. This is illustrated in Figs. 8 - 10. The difference in the swing angle, ϕ, is much more dramatic than for the lower engine torque, as is the difference in the engine speed. The opposing torque provided by the pendular masses in the Speckhart absorber is twice that of the simple absorber. This effect will be discussed in more detail later in

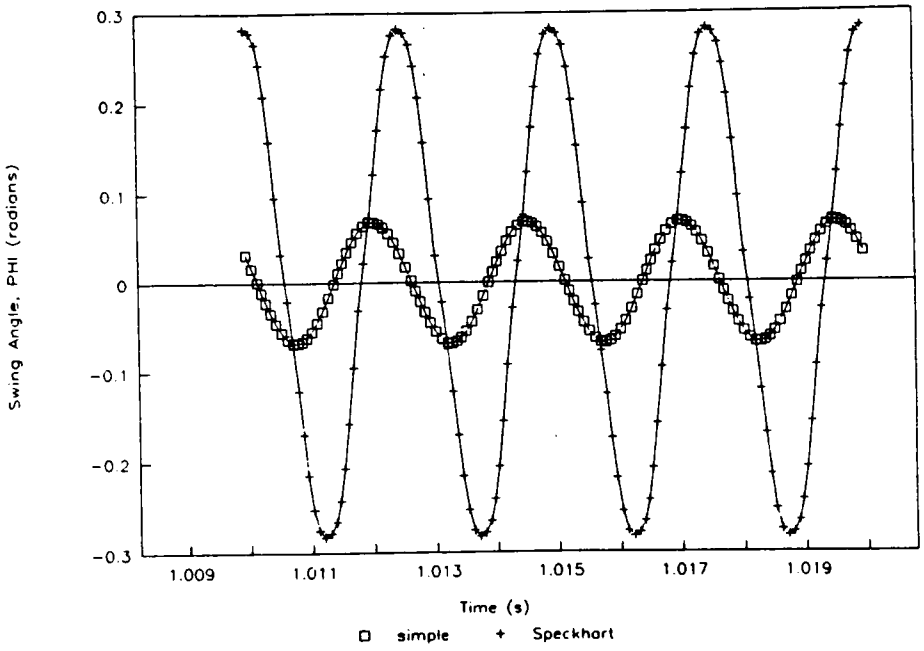

Figure 8 Comparison of Swing Angles of Two Absorbers (M = 150 ft-lb)

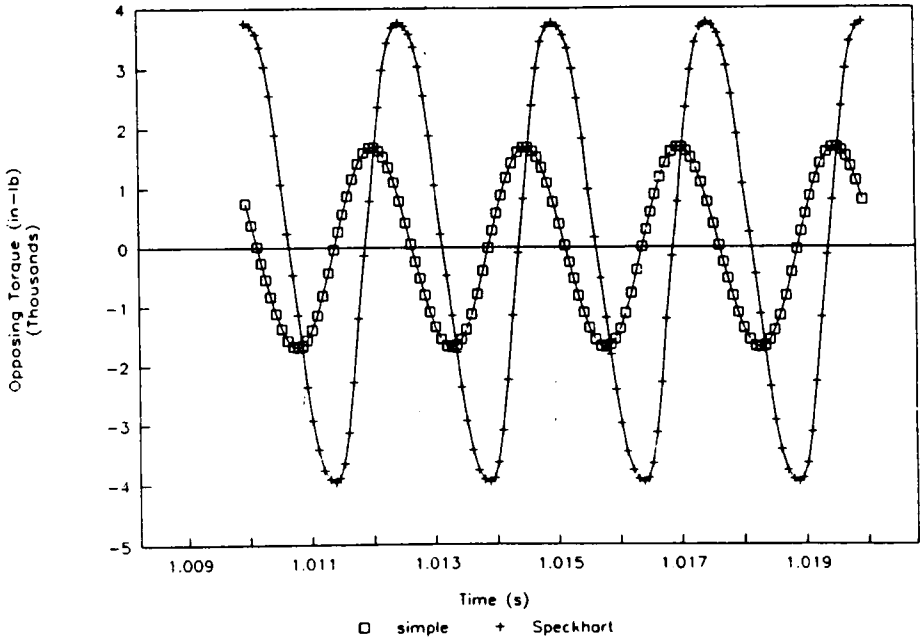

Figure 9 Comparison of Opposing Torque of Two Absorbers (M = 150 ft-lb)

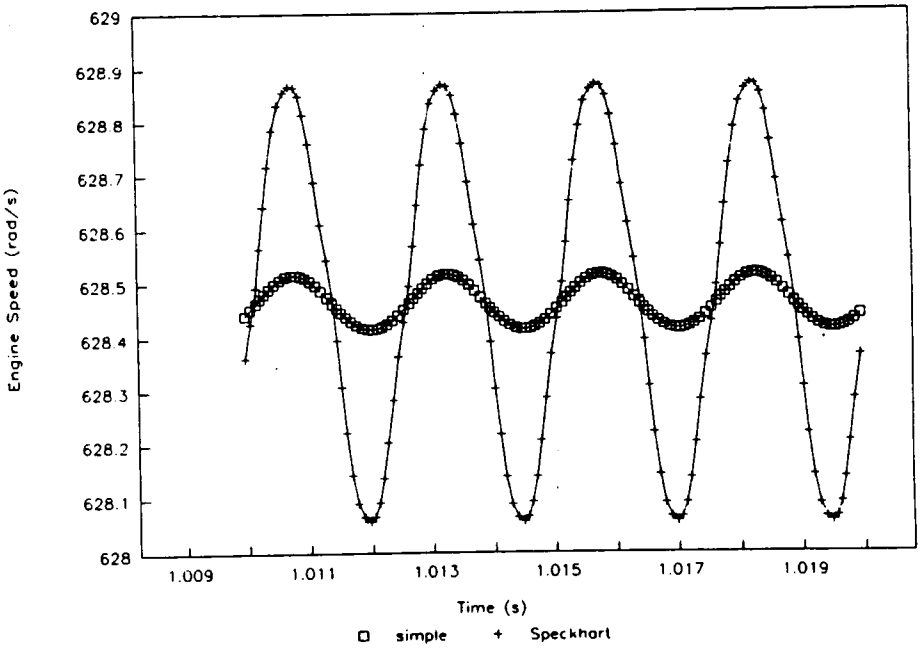

Figure 10 Comparison of Engine Speed of Two Absorbers (M = 150 ft-lb)

this chapter.

Viscous-fluid Damper vs. Speckhart Absorber

Initially, the viscous-fluid damper was modeled, as per Thomson (1988), using Eqns. 12 and 13 from Chapter 2. The change in crankshaft speed with the damper in place was calculated, assuming a sinusoidal torque input as with the absorbers. The derivation and accompanying program code is given in Appendix H, where a schematic and a symbolic representation of the damper and crankshaft are shown as Figs. H1 and H2, respectively. The size of damper chosen for the computer model was one having an 8-inch outside diameter, a 1-inch internal ring width (measured radially) and a 1-inch thickness. Figure 11 shows the performance of the damper for a lower value of crankshaft stiffness for

11 shows the performance of the damper for a lower value of crankshaft stiffness for several values of damping coefficient, while the performance for a higher stiffness is shown in Fig. 12. The lower value of crankshaft stiffness was estimated based on a plain carbon steel shaft of length eight inches. The higher value of stiffness was not estimated, rather is was only used to show the effect of higher crankshaft stiffness on the damper performance. These results suggest that a damper will significantly reduce torsional vibrations under certain conditions, and that the best operating range of the damper is directly related to the stiffness of the crankshaft.

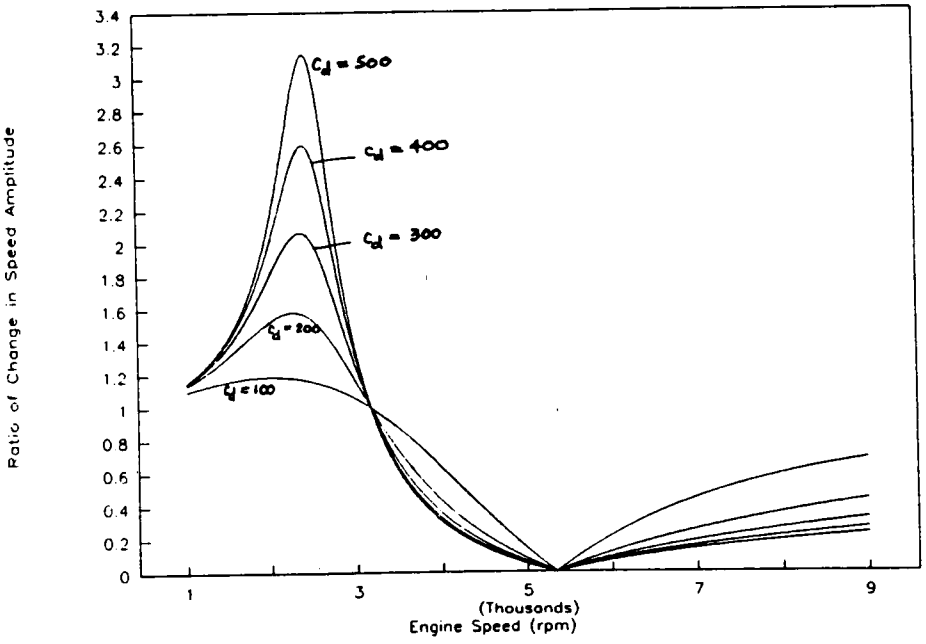

Figure 11 Performance of 8-Inch Viscous-fluid Damper (K = 222300 in-lb/rad)

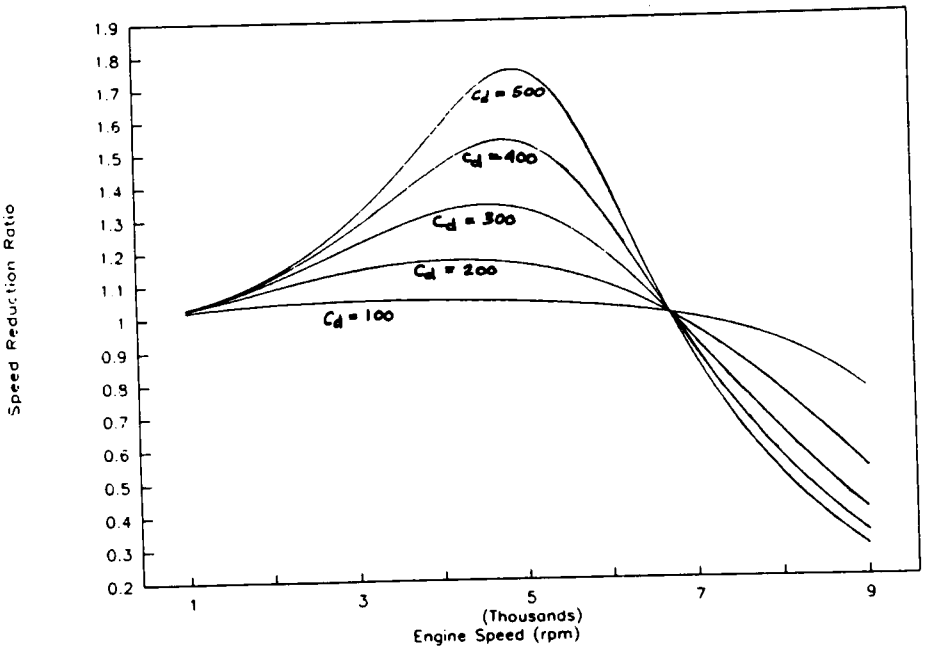

Figure 12 Performance of 8-Inch Viscous-fluid Damper (K = 1000000 in-lb/rad)

The results given in Figs. 11 and 12 are deceiving. While they indicate that a viscous-fluid damper may be designed to be very effective in reducing intra-cyclic, torsional vibration for a particular range of engine speeds, they are based upon a model which does not account for the engine to which the damper is coupled. The inertia of the engine, which includes in part that of the flywheel and clutch, is much larger than that of the crankshaft and damper. The initial model, as given by Thomson (1988) is therefore inadequate for use in simulating the performance of a viscous-fluid damper coupled to an engine. A more realistic model was established and is illustrated in both schematic and symbolic form in Appendix H as Figs. H3 and H4, respectively. The equations of motion for the damper were rewritten to include the inertia of the engine. These are given by

$$I_m\ddot{\theta} + K(\theta - \gamma) = M(t) \tag{20}$$

$$I_c\ddot{\gamma} + c_d(\dot{\gamma} - \dot{\phi}) - K(\theta - \gamma) = 0 \tag{21}$$

$$I_d\ddot{\phi} - c_d(\dot{\gamma} - \dot{\phi}) = 0 \tag{22}$$

Using these, the change in crankshaft speed was again calculated, assuming a sinusoidal torque input. The derivation and accompanying program code are also given in Appendix H. The results for the damper previously described are shown in Figs. 13 - 15 for two crankshaft stiffnesses and for a range of values of damping coefficients.

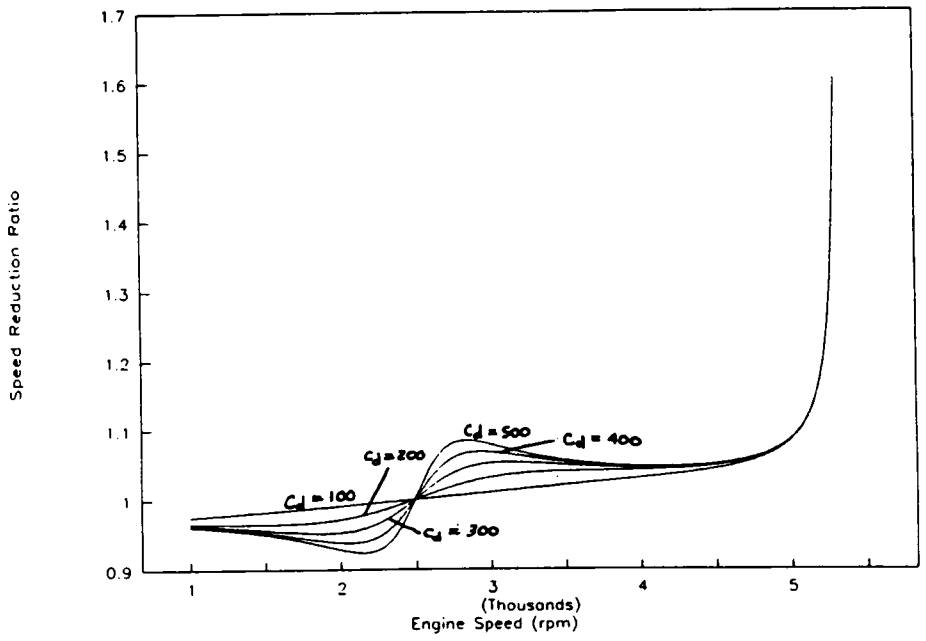

Figure 13 Performance of 8-Inch Damper Coupled to Engine (K = 222300 in-lb/rad)

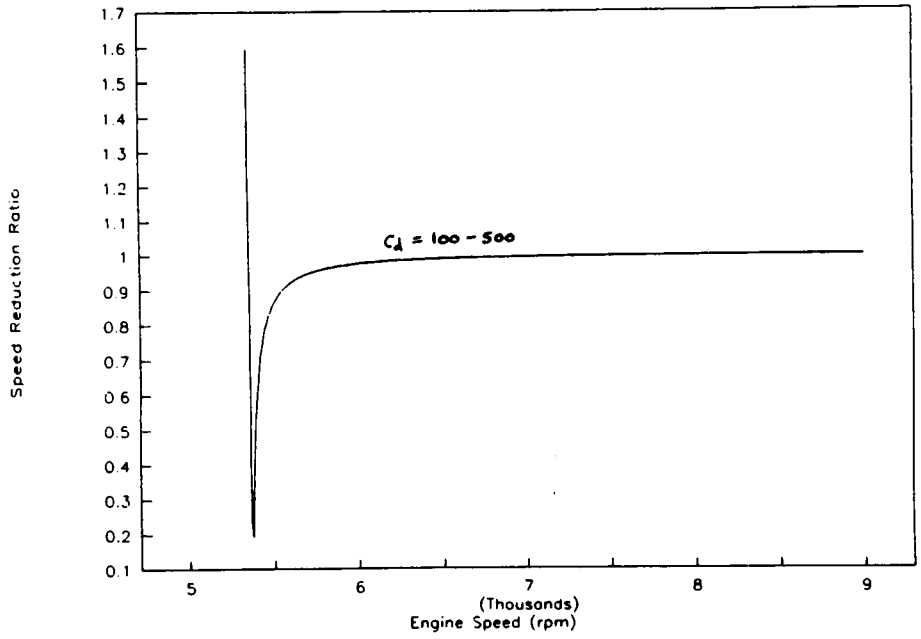

Figure 14 Performance of 8-Inch Damper Coupled to Engine (K = 222300 in-lb/rad)

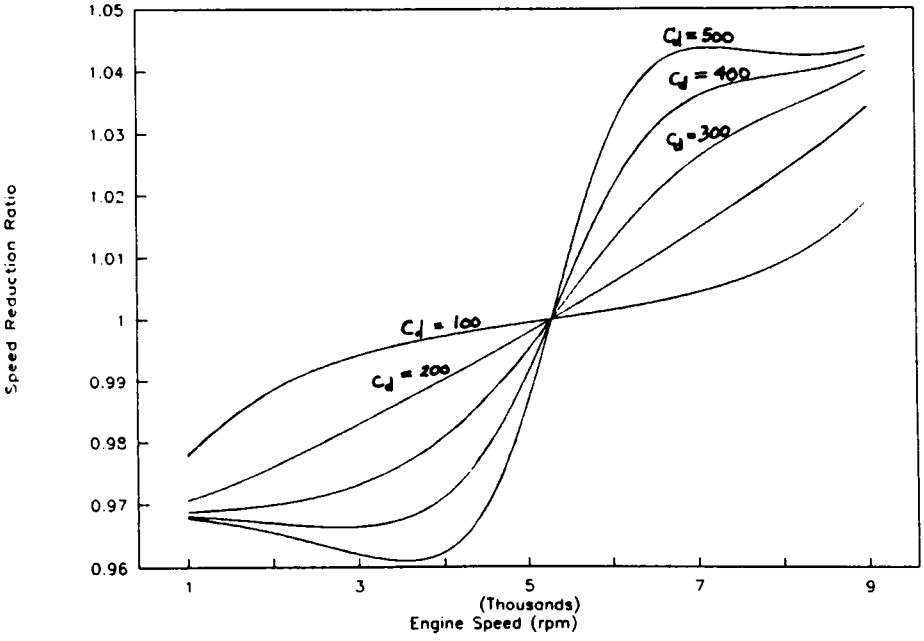

Figure 15 Performance of 8-Inch Damper Coupled to Engine (K = 1000000 in-lb/rad)

Because the magnitude of engine torque does not affect the characteristic performance of the damper, only one value of engine torque is used in Figs. 13 - 15.

In the models of the simple and Speckhart absorbers, the crankshaft is assumed rigid, unlike in the damper model. However, the stiffness of the crankshaft does not significantly affect the capability of the damper, only the frequency at which it is most effective. Therefore, a performance comparison between the damper and the Speckhart absorber is given in Figs. 16 and 17 to demonstrate the potential of both devices, rather than to predict the performance of either under specific conditions. The damper used is the same as with the previous figures with a damping coefficient of 100 in-lb-s/rad and a crankshaft stiffness of 1000000 in-lb/rad. The absorber is the 8-inch absorber.

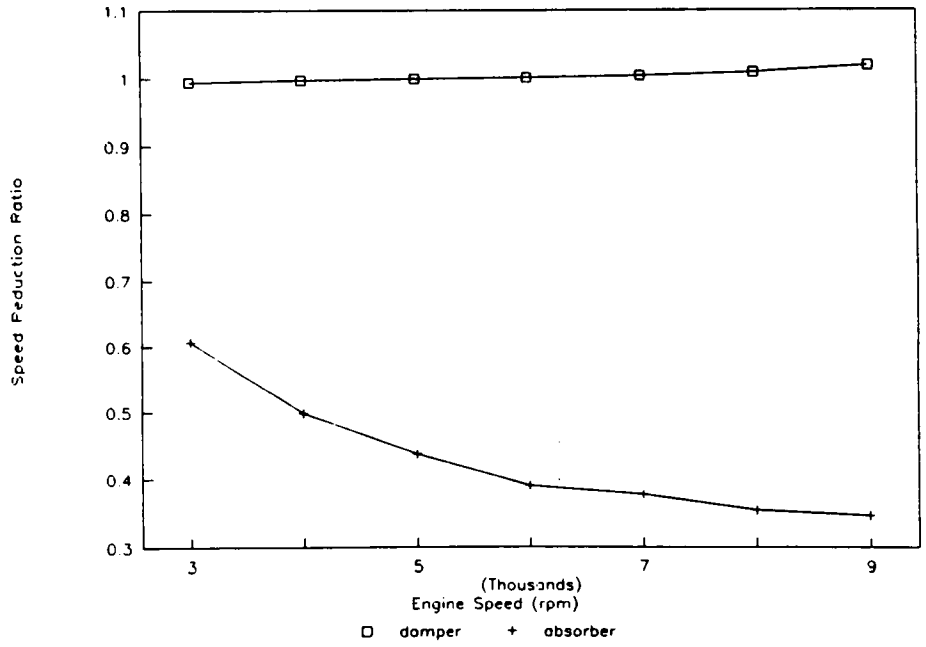

Figure 16 Comparison of Damper and Absorber (M = 10 ft-lb)

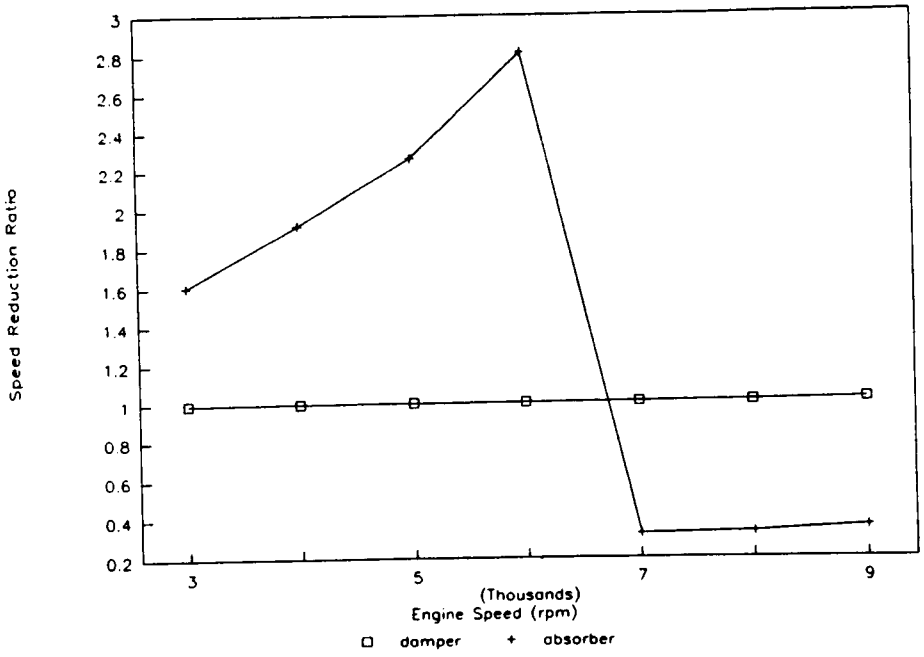

Figure 17 Comparison of Damper and Absorber (M = 150 ft-lb)

Speckhart Absorber Performance Study

The performance of the Speckhart absorber was investigated to define the operating space and to test the effect of size, pendular mass frequency and sensitivity of the nonlinear nature of the equations of motion. The steady-state solution of the equations of motion for the Speckhart absorber, Eqns. 15 and 16, was solved numerically, assuming an internal damping coefficient (c_f) of 0.001 in-lb-s. This value was chosen because a small amount of damping was necessary for the motion of the absorber to reach steady-state. The internal damping of the absorber was not studied very carefully, nor was the coefficient of damping measured in any fashion. As previously mentioned, the engine modeled was an 8-cylinder engine, having a constant inertia of 5 in-lb-s^2. Unless otherwise specified,

the absorber used in this study was the 8-inch absorber defined on page 18. The simulated results presented in this thesis are observations of performance made using the specified model and numerical solver; a complete analysis of these observations is beyond the scope of this thesis. The equations of motion for the Speckhart absorber are complex, nonlinear equations which are sensitive to their nonlinear nature. This will be illustrated later in this chapter. While the equations for the given model are correct and the numerical solver works well, it is also possible that the model itself is inadequate.

Defining the Operating Space

The operating space describes the range of conditions for which a given size of absorber is effective, thereby providing a means to prescribe an appropriate application for the absorber or to determine if a given application would be suitable for a particular absorber. Figure 18 is given to define this operating space. The performance of the absorber over a range, representative of speeds and torques for a racing engine, is given in Fig. 19. Figure 20 shows the behavior of ϕ, the swing angle of the pendular masses, corresponding to the same loading conditions. Note that the absorber is effective at values of ϕ below approximately 0.2 radians, suggesting an upper bounds on the linear behavior of the absorber. When the engine torque and speed acting on the absorber exceeds its capability, the pendular masses cease to oscillate out-of-phase with the driving torque and tend to be in-phase with the driving torque. Under these conditions, the torque provided by the pendular masses adds to the driving torque rather than opposing it; so the torsional vibration is magnified instead of reduced. This effect is illustrated in Appendix L.

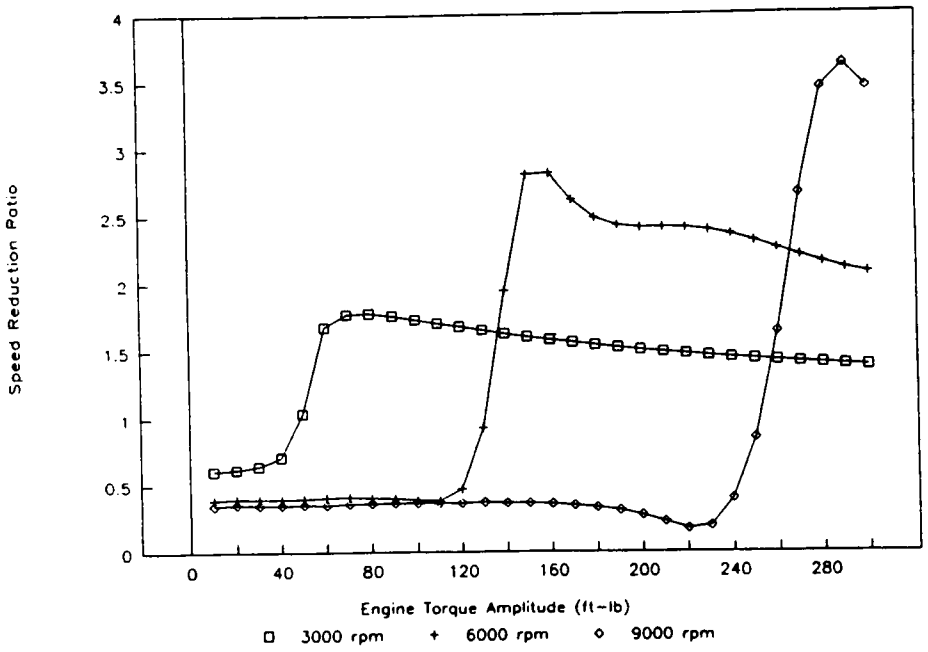

Figure 18 Operating Space of Speckhart Absorber

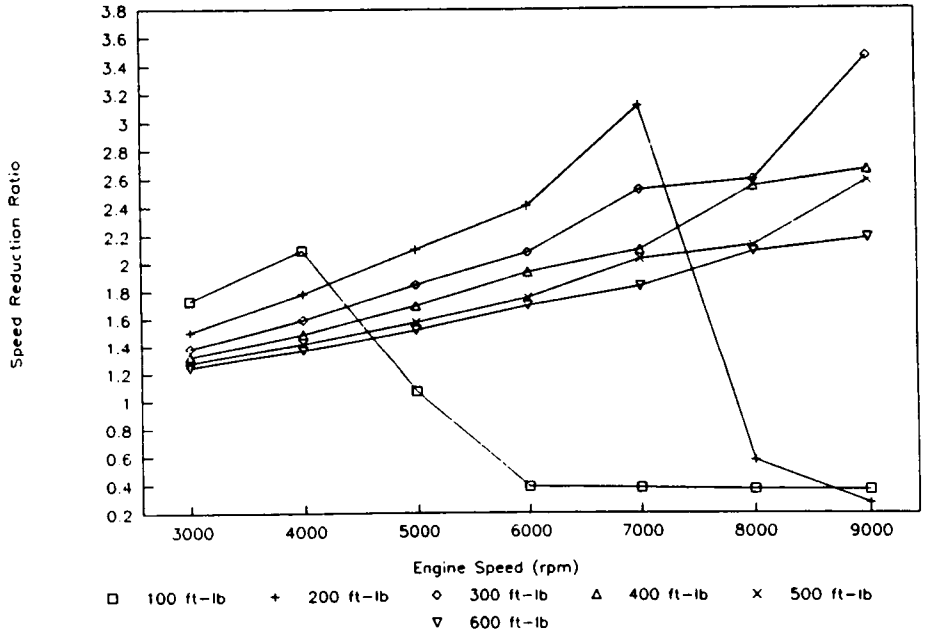

Figure 19 Speckhart Absorber Performance Under Racing Conditions

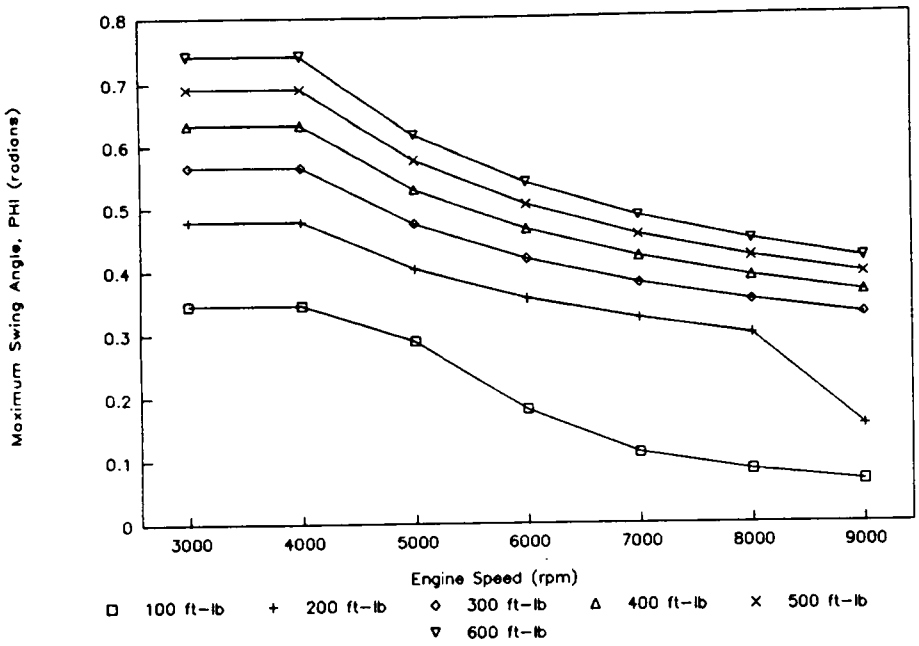

Figure 20 Maximum Swing Angle Under Racing Conditions

Effect of Size

The effect of absorber size on performance is demonstrated in Fig.21. In general, the larger the absorber, the more capability it has to reduce torsional vibration.

Effect of Pendular Mass Frequency

The pendular masses were originally tuned to a frequency four times that of the crankshaft frequency for an 8-cylinder engine. This was based on the assumption that the swing angle, ϕ, was small; however, as already demonstrated, ϕ can greatly exceed 0.2 radians when engine torque is high, as for a racing engine. It was suspected that, under such conditions, the pendular masses were unable to keep pace with the frequency of

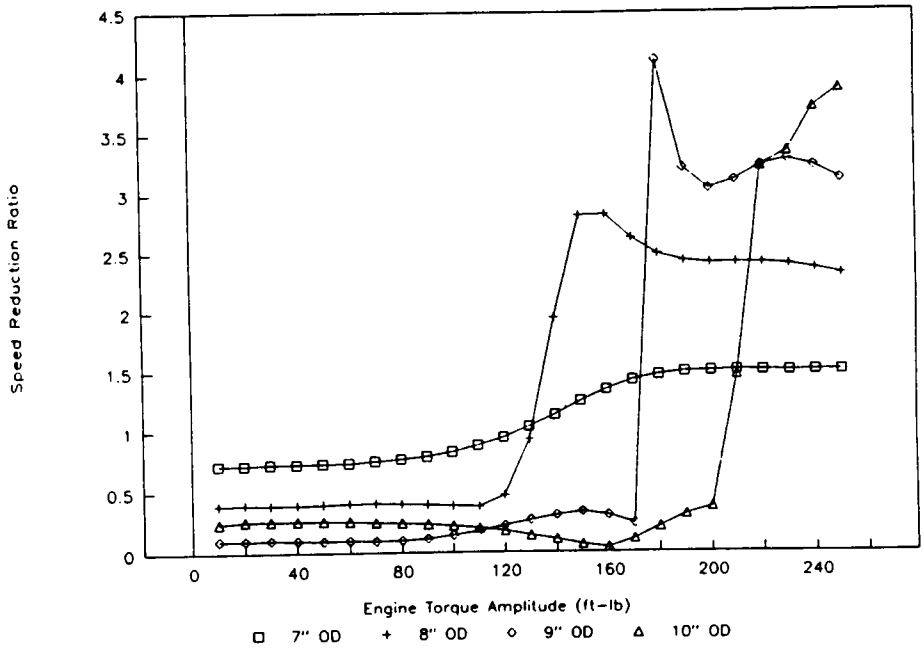

Figure 21 Operating Space for Range of Absorber Sizes

engine power pulses. Thus a study was conducted to test the effect of changing pendular mass frequency. This was done by varying the radius of the pendular masses and keeping all other dimensions constant The first test was conducted for a torque loading well within the capability of the absorber. The results are shown in Fig.22. The performance is best at four times the crankshaft frequency, as expected. Next a test was performed at a torque which exceeded the capability of the absorber at lower engine speeds, but not at higher ones (Fig.23). As expected, the best performance at 9000 rpm occurs at four times the crankshaft frequency. However, at the two lower speeds, the best performance results when the pendular masses are tuned slightly higher. For values of torque in excess of the capability of the absorber at speeds of up to 9000 rpm, the best performance

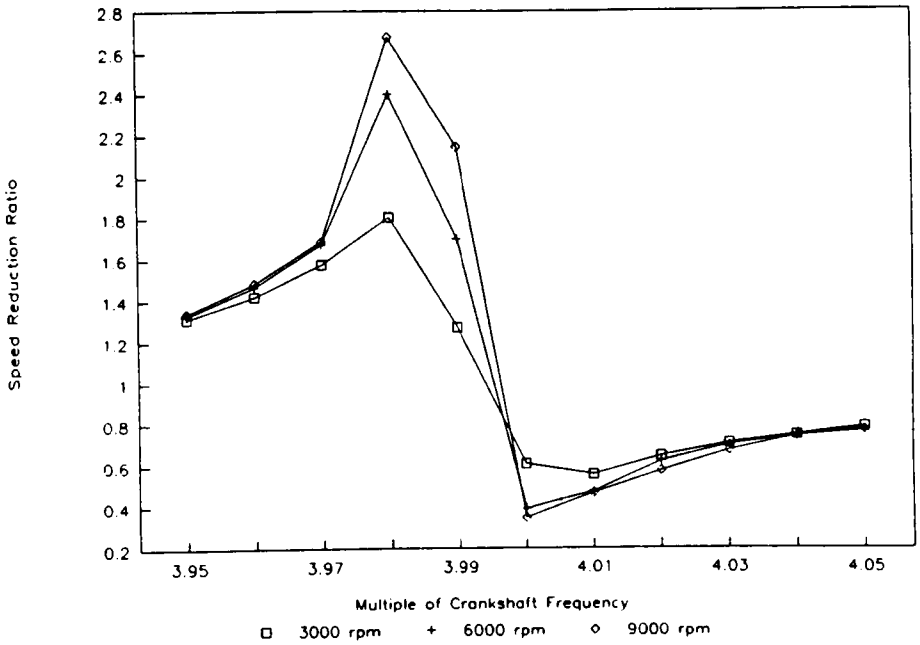

Figure 22 Effect of Changing Pendular Mass Frequency (M = 10 ft-lb)

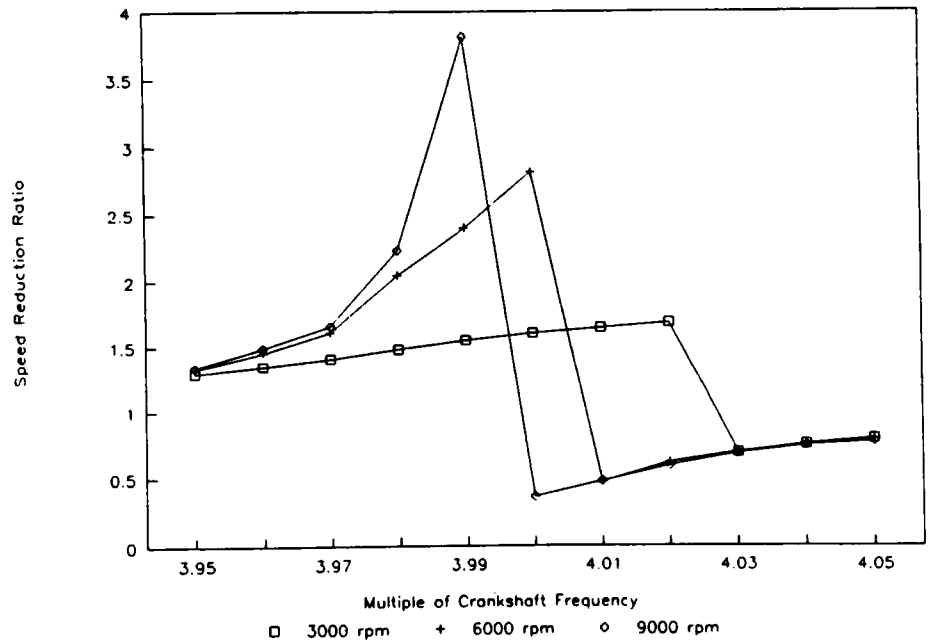

Figure 23 Effect of Changing Pendular Mass Frequency (M = 150 ft-lb)

always occurs when the pendular masses are tuned higher than four times the crankshaft frequency, as demonstrated in Fig.24.

Sensitivity of Nonlinearity

As already mentioned, the equations of motion which govern the performance of the Speckhart absorber are nonlinear. For small angles, these equations may be linearized, as for a simple pendulum, and were expected to closely describe the motion of the absorber. When all $\sin\phi$ and $\cos\phi$ from Eqns. 15 and 16, the equations of motion for the Speckhart absorber, were replaced with ϕ and 1, respectively, the actual results of the numerical solution for these adjusted equations of motion followed the expected performance of a simple absorber. Each individual $\sin\phi$ and $\cos\phi$ was also replaced with

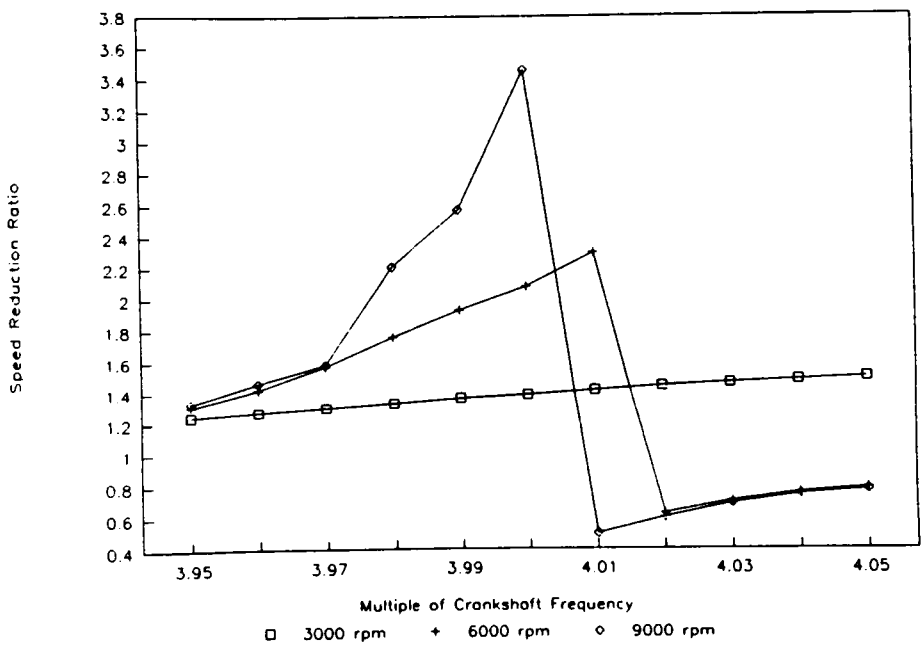

Figure 24 Effect of Changing Pendular Mass Frequency (M = 300 ft-lb)

ϕ and 1, respectively, separately from the other ϕ-terms, and these adjusted equations were evaluated numerically. The results for each of these partial linearizations were similar to that of the collective linearization of ϕ-terms, except for one term only. That is, only one ϕ-term from the equations of motion caused the performance of the Speckhart absorber to deviate significantly from the simple absorber. This term from Eqn. 16 was partially linearized as follows:

$$-mr_2r_3\sin\phi\dot{\theta}^2 \;\Rightarrow\; -mr_2r_3\phi\dot{\theta}^2$$

Using Eqn. 15 and the partially-linearized version of Eqn. 16, the performance of the absorber was again simulated using the numerical solver and compared to the nonlinear performance. The results are given in Figs. 25 and 26 for the 8-inch absorber. As previously illustrated, the Speckhart absorber behaved similarly to the simple absorber

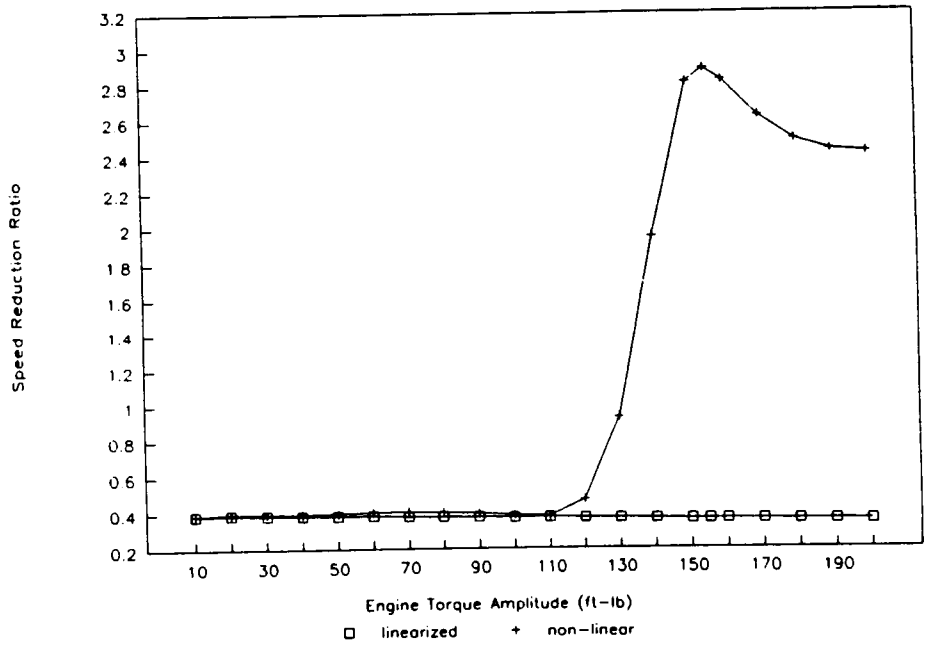

Figure 25 Sensitivity of Equations of Motion to Nonlinearity (ω = 6000 rpm)

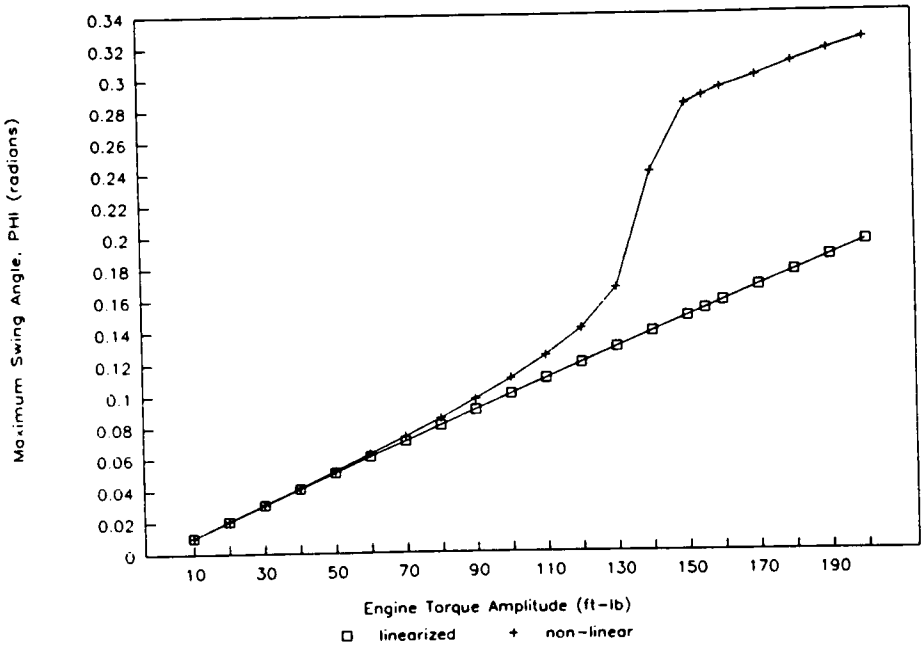

Figure 26 Sensitivity of Equations of Motion to Nonlinearity (ω = 6000 rpm)

within its capability (Fig. 7) but unlike the simple absorber outside its capability (Fig. 10). Figure 25 demonstrates that the nonlinear equations of motion provided good performance only within the capability of the absorber, while the partially-linearized equations of motion provided good performance throughout the entire range of torque input, as with the simple absorber. Figure 26 shows that the partially-linearized equations of motion ceased to approximate the nonlinear equations at about 0.15 radians, thereafter having a swing angle, ϕ, of approximately one half that of the nonlinear equations. This significant aberration resulted from the linearization of only one term from the equations of motion of the Speckhart absorber and proved the sensitivity of them to their nonlinearity.

CHAPTER 4

TESTING OF THE SPECKHART ABSORBER

Prototype Absorber Test

The prototype absorber was tested by Mr. Larry Clark of Custom Race Engines in Knoxville, Tennessee. He tested the Speckhart absorber, along with a stock damper and a viscous-fluid damper, on a 600 hp Chevrolet engine which was mounted on a test stand in the engine-test room adjacent to his shop. From his vantage in this room, Mr. Clark concluded that the Speckhart absorber seemed to provide smoother engine operation that either of the dampers.

Mr. Clark's comments prompted another test to try to obtain experimental evidence to verify his evaluation. For this test, an accelerometer was attached to the engine test stand in Mr. Clark's test room. This time a 650 hp engine was tested with the Speckhart absorber, the viscous-fluid damper and the stock damper. Several runs were made with each device, with each run beginning at approximately 3000 rpm and increasing to approximately 8000 rpm in four or five seconds. During these intervals, the readings from the accelerometer were recorded. The measured results did not reveal any significant difference in the performance of these devices. However, the test was inconclusive because the test equipment did not isolate torsional vibrations, which were the only kind the absorber and dampers were designed to reduce.

An examination of the scoring from the pendular masses on the inside of the cavities revealed a maximum swing angle of ±60 degrees. This was correlated to a computer model of the same dimensions as the prototype absorber by first assuming the swing angle of the pendular masses to be governed by

$$\phi = \phi_o \sin 4\omega t \tag{23}$$

Using the first two derivatives of Eqn. 23 and the equation for the opposing torque of the Speckhart absorber (Eqn. 6), along with Eqn. 23, the opposing torque capability of the Speckhart absorber were solved for a range of values of the maximum swing angle (ϕ_o) and the engine speed. These results were generated by computer. They are given by Fig. 27. This figure gives an approximation of the opposing torque capability fo the Speckhart absorber for a given engine speed and maximum swing angle. From Fig. 27, the

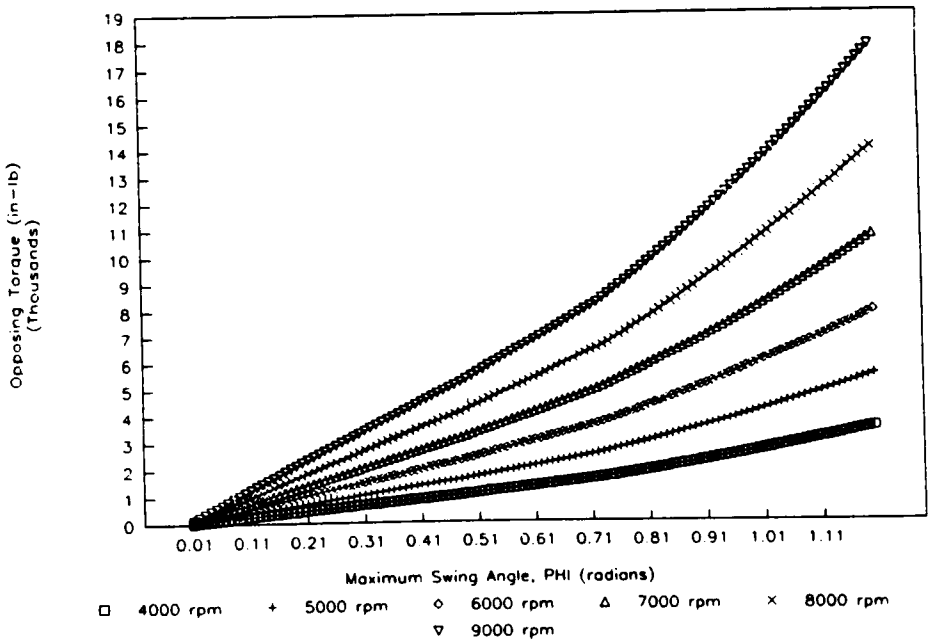

Figure 27 Predicted Opposing Torque Capability of Prototype Absorber

predicted opposing torque generated by the prototype absorber at 6000 rpm and a swing angle of 60 degrees (1.05 radians) is approximately 600 ft-lb, which is a feasible driving torque for a high-output racing engine at that speed.

Model Absorber Test

Dr. Speckhart designed and constructed a model absorber to test his concept. This model is illustrated in Figs. 28 - 30. The outside diameter of the model is 5 in. and its thickness is 0.5 in. The absorber has four pendular masses, as shown in Fig. 30, which are made of steel. This absorber is designed for use with four-cylinder engines, which have two power pulses per crankshaft revolution. The engine is modeled by a cam mechanism (see Fig. 29) that is driven by a hand drill at approximately 800 rpm. The cam itself has a

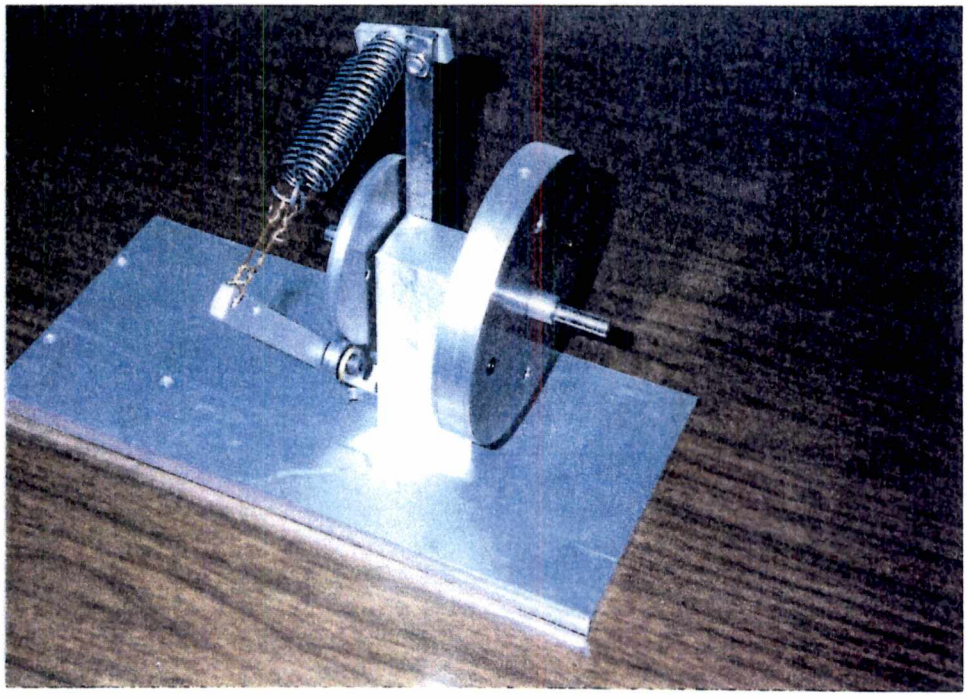

Figure 28 Model Absorber of Frank H. Speckhart

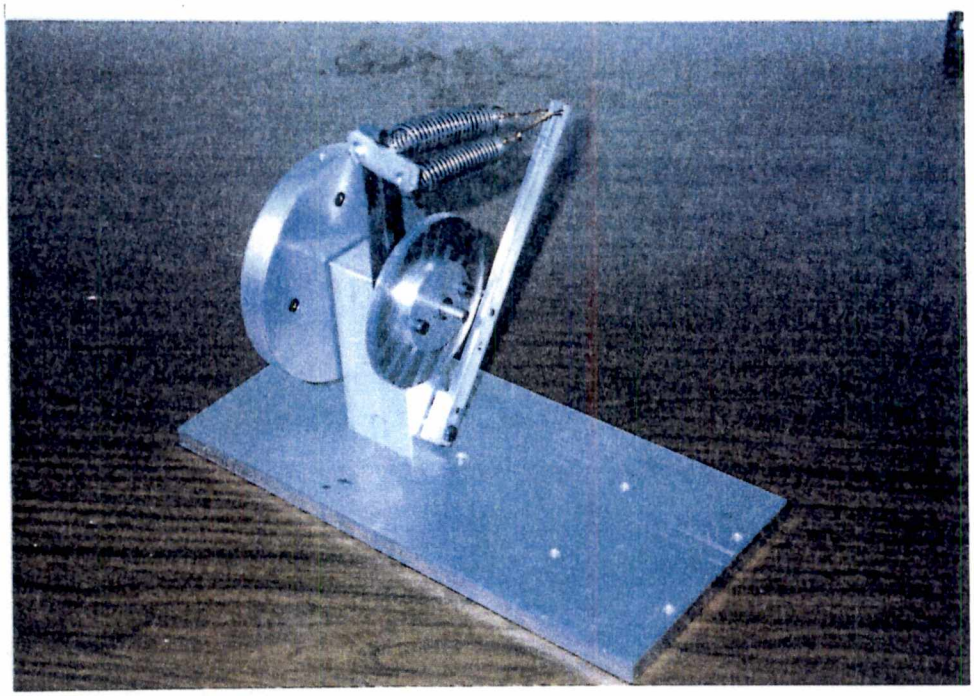

Figure 29 Model Absorber of Frank H. Speckhart (other side)

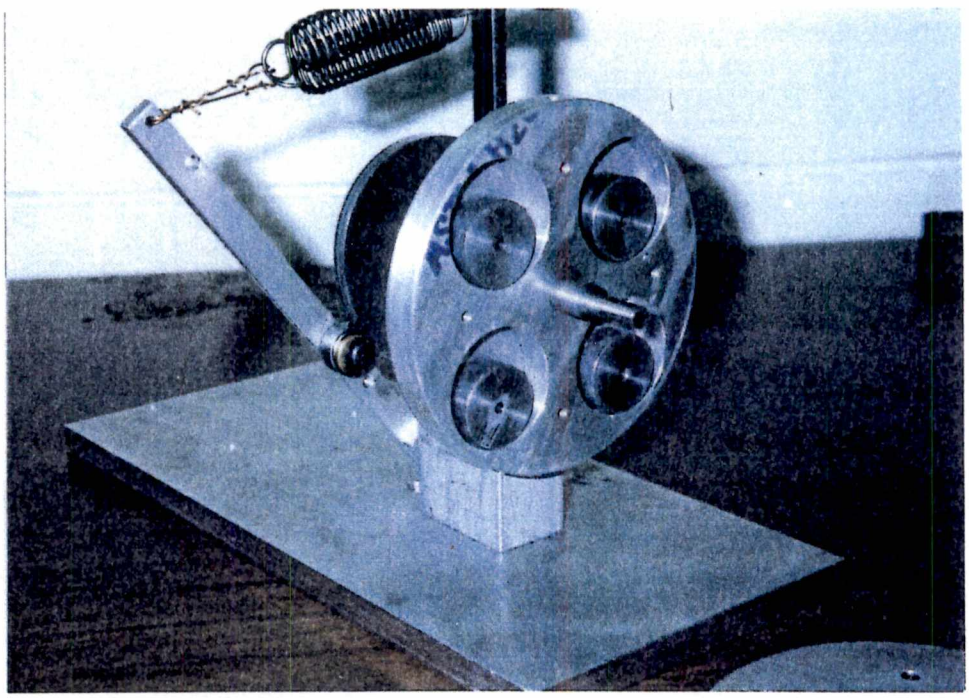

Figure 30 Model Absorber of Frank H. Speckhart (pendular masses exposed)

base circle diameter of 3.75 inches and provides sinusoidal motion with an amplitude of 0.1 inches. The two springs are very stiff and are intended to simulate a high engine torque.

This model of both absorber and engine was connected to an instrument-grade tachometer, which provided a direct means of measuring torsional vibrations -- in contrast to the test of the prototype absorber. To filter the brush noise, the tach output was connected to a first-order filter having a time constant of 0.005 seconds. The voltage output from the tach was used to indirectly measure the rotational velocity.

Three runs were recorded with the model absorber and tachometer. The first was with the pendular masses removed. The second was with the masses attached to the absorber body so that they could not move. The last was with the masses in place and free to roll inside their cavities. The relative speed variation (given as a voltage) for each of these three is shown in Figs. 31 - 33. The difference in the shapes of Figs. 31 and 32 was unexpected. It is possible that the pendular masses for the second run were not fixed tightly, permitting them to move slightly inside the cavities. Figure 33 clearly shows that the Speckhart absorber is capable of significantly reducing torsional vibrations, by a factor of approximately 3 (SRR $\approx$ 1/3).

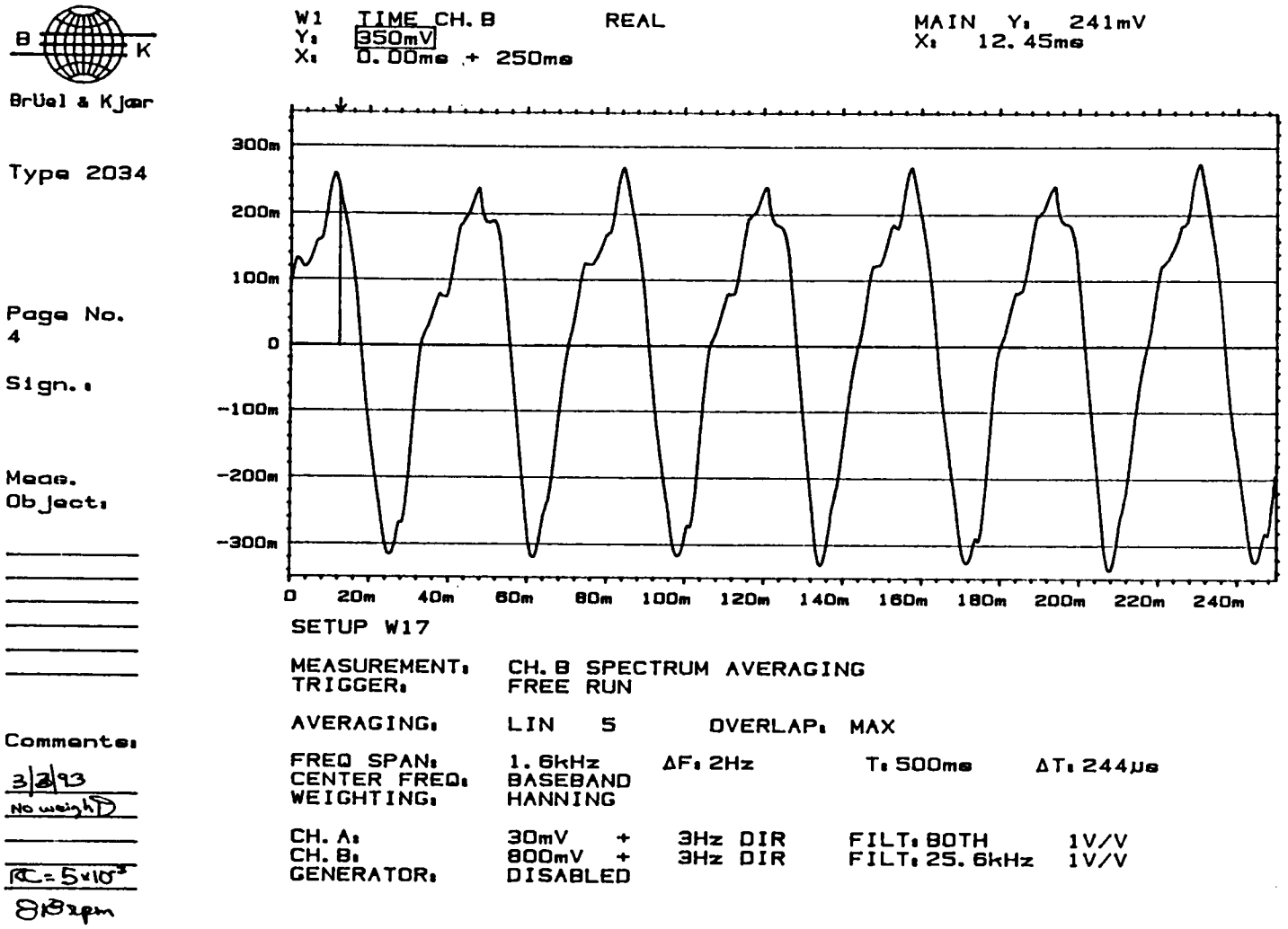

Figure 31 Model Absorber Performance With Pendular Masses Removed (ω = 818 rpm)

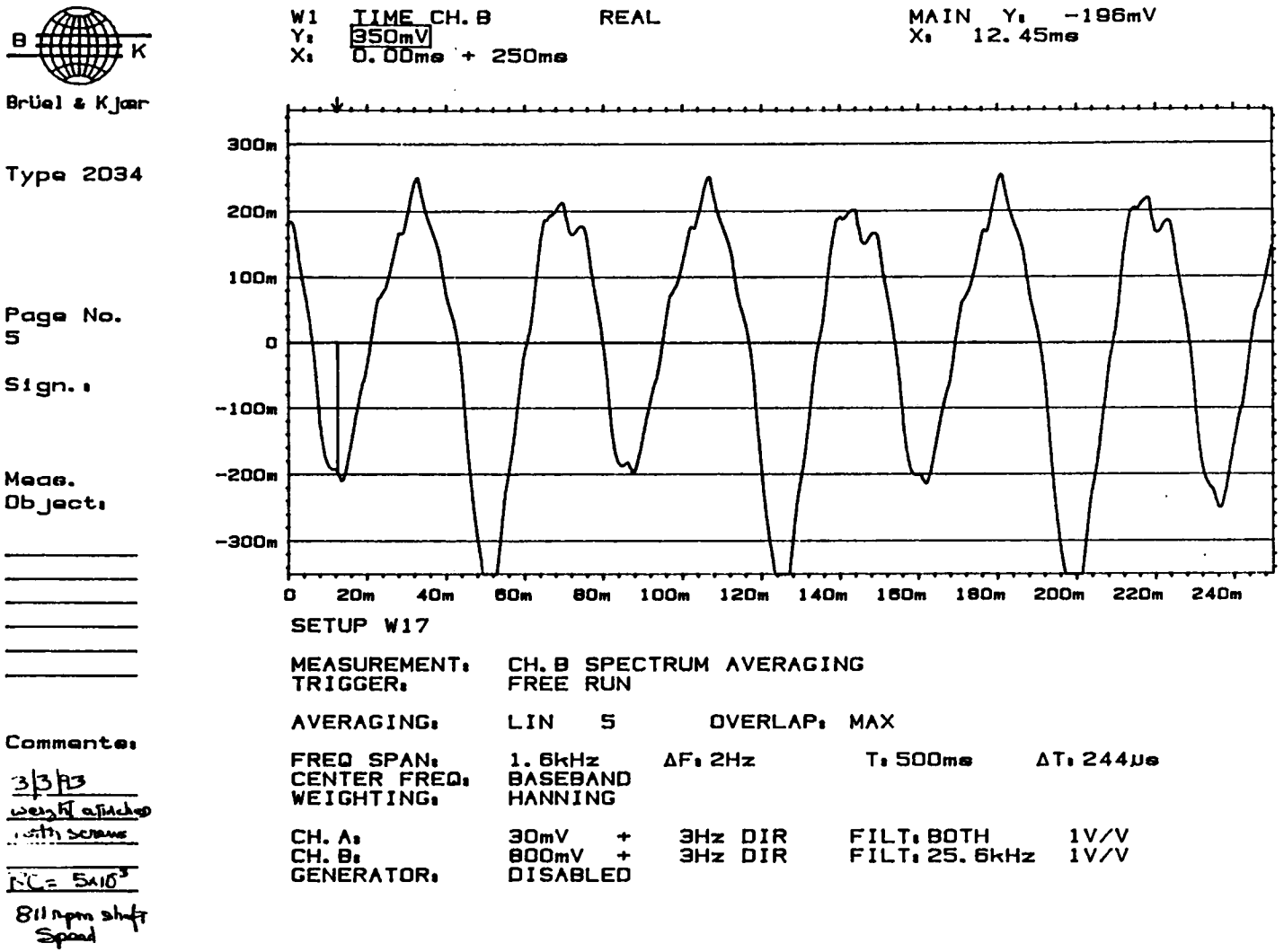

Figure 32 Model Absorber Performance With Pendular Masses Fixed (ω = 811 rpm)

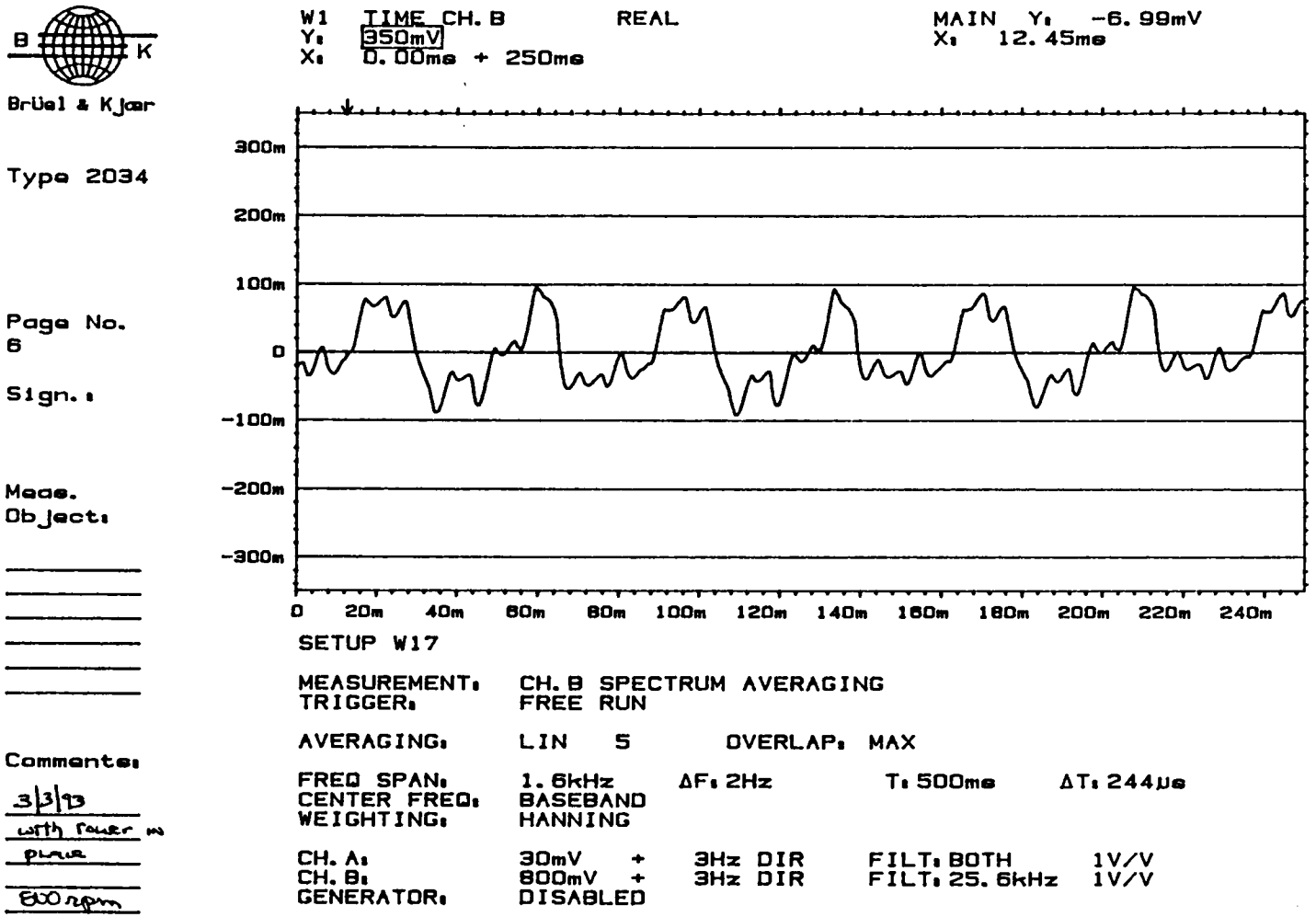

Figure 33 Model Absorber Performance With Pendular Masses Free to Oscillate (ω = 810 rpm)

CHAPTER 5

CONCLUSIONS

Overview

The results of both the computer simulations and the testing of the Speckhart absorber suggest that the device provides significant reduction in torsional vibrations under certain conditions. Unexpectedly, there is evidence to suggest that the effectiveness of the absorber may be limited to a range of engine torques which depends primarily on the size of the absorber.

Computer Simulation of Speckhart Absorber Performance

As demonstrated in Fig. 18, the effectiveness of the Speckhart absorber is dependent upon the driving torque and speed of the engine. For the 8-inch diameter absorber, 10 ft-lb is within its capability over the entire range of engine speeds from 3000 to 9000 rpm. Under these loading conditions, the Speckhart absorber performs much like the simple absorber, as shown in Fig. 7, and far better than a similarly-sized viscous-fluid damper, as shown in Fig. 16. At 150 ft-lb of engine torque, the Speckhart ceases to mimic the simple absorber as seen in Fig. 10, and the absorber out-performs the damper only at higher engine speeds, as seen in Fig. 17. Beyond the limits of the capability of the Speckhart absorber, the torsional vibration is magnified, rather than reduced. This is an

unexpected outcome, and is not corroborated by any testing of either the prototype or model absorbers.

As noted in Chapter 3, the pendular masses cease to oscillate out-of-phase when the capability of the Speckhart absorber is exceeded. Beyond the limits of the absorber, the masses tend to oscillate in-phase with the engine torque, which adds to the engine torque (instead of absorbing it) and creates a magnification of the torsional vibration of the crankshaft. This characteristic is shown in Appendix L.

It was also noted in Chapter 3 that the equations of motion for the Speckhart absorber are particularly sensitive to their nonlinear nature, as illustrated in Fig. 25. An explanation for this is beyond the scope of this thesis, however, this aspect of those equations seems to make the difference in the ability of the Speckhart absorber to mimic the behavior of a simple absorber in the computer simulation.

Although the model used in the computer simulation is believed to reasonably approximate the Speckhart absorber attached to a real engine, there is the potential that one or more of the assumptions, estimations or simplifications made for the model is unreasonable. The engine inertia was based on a rough calculation which included the dimensions of a crankshaft from a typical racing engine and assumed dimensions of the flywheel. This estimated value was modeled as a constant, which does not represent reality. However, a constant value was used for simplicity. The crankshaft defined in

the model was assumed rigid. This approximation was thought reasonable, and it greatly simplified the equations of motion of the absorbers. It was not determined what effect this had upon the accuracy of the solution. Internal damping was included in the equations of motion for the Speckhart absorber to pass through the transient solution. No study nor experiment was conducted to determine the validity of the magnitude or nature of the damping assumed for the Speckhart absorber. No damping was modeled for the engine.

Testing

Testing of Prototype Absorber

As stated in Chapter 4, the results of the prototype absorber test were inconclusive because the test equipment used did not isolate torsional vibrations. However, the prototype was subjected to severe loading conditions on Mr. Larry Clark's engine test stand. It would seem that a magnification of torsional vibrations, as suggested by the computer simulation for severe loading, would have been noticed by Mr. Clark, an experienced engine builder. No such magnification was detected by him.

Testing of Model Absorber

Figures 31 - 33 demonstrated the potential of the Speckhart absorber to reduce torsional vibrations. The favorable performance of the model absorber resulted despite three factors which tend to increase torsional vibrations: fewer number of cylinders; lower ratio of engine inertia to absorber inertia; and lower engine speed. The engine modeled was

a 4-cylinder engine, which does not run as smoothly as an 8-cylinder engine like the one modeled in the computer simulation. The ratio of the engine inertia to the absorber inertia was much lower for the model absorber than in the computer simulation. The model absorber was also operated at a lower engine speed than the computer model. This evidence cast doubt on the validity of the computer model. However, while the torque loading for the model absorber was thought to be very high, this was not established as a fact, nor was any study conducted using a range of torques with the model absorber.

CHAPTER 6

RECOMMENDATIONS

Design Improvements

Absorber Size

Based on Fig. 21, larger absorbers more effectively reduce torsional vibrations. This led to the notion that a large absorber might be designed to serve as a flywheel. A flywheel-sized absorber was designed, having an r_3 of 2.71 inches, an r_w of 1.9584 inches and 3 cavities/masses, with the other absorber parameters being the same as with previous absorbers. The simulated performance of this absorber is shown in Fig. 34. The

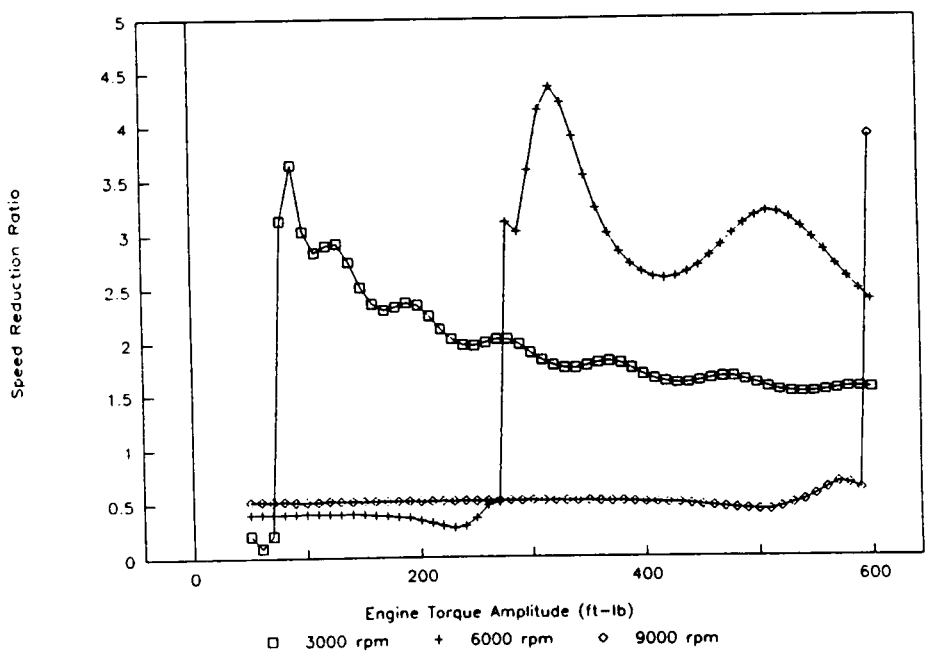

Figure 34 Simulated Performance of Flywheel Absorber

capability of the flywheel absorber was significantly greater than its 8-inch, outside-diameter counterpart (Fig. 18). It seemed worthwhile, therefore, to suggest that this absorber be considered as a replacement for a standard flywheel.

Increased Pendular Mass Frequency

Figures 22 - 24 suggest that absorber dimensions can be found that would improve the performance of the absorber at what would otherwise be beyond its capability. Figure 35 demonstrates the performance of an 8-inch absorber tuned to 4.05 times the crankshaft speed and illustrates that an absorber can be tuned to provide some reduction in torsional vibration for a wider range of engine torques and speeds, although the reduction would not be as great as is possible with an absorber tuned to four times the crankshaft speed (see also Fig. 18).

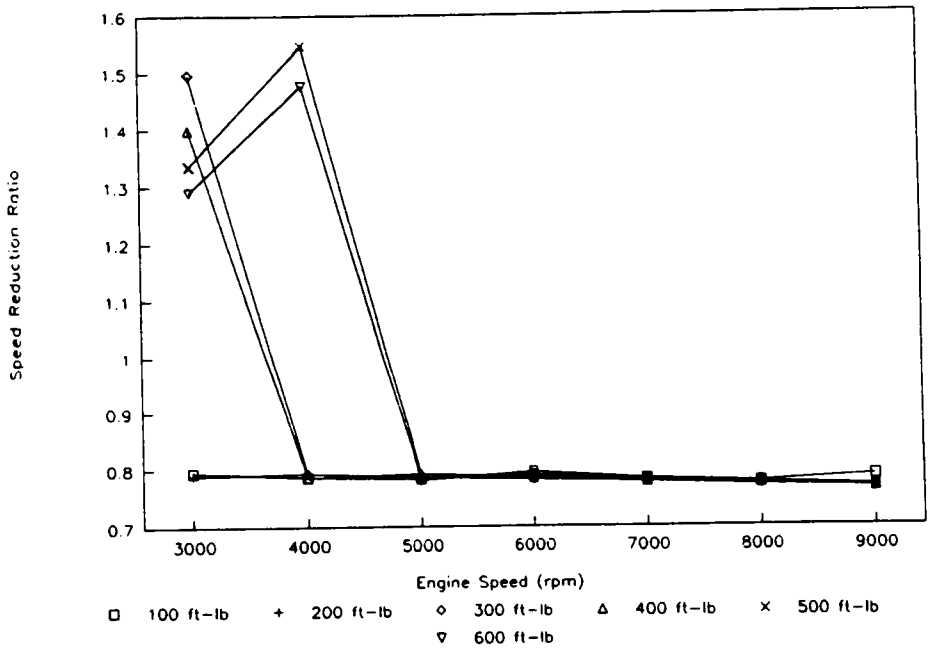

Figure 35 Performance of 8-Inch Absorber at Higher Natural Frequency

Critical Dimensions

As demonstrated in Figs. 22 - 24 in Chapter 3, the performance of the absorber was generally worse when the natural frequency of the pendular masses was lower than four times the speed of the crankshaft. So, rather than any one particular dimension having the utmost importance, the relationship between the dimensions must be such that the natural frequency of the pendular masses is at or above its target frequency.

Materials

The pendular masses in the prototype and model absorbers were steel. Those in the absorbers used in the computer simulations were high-strength brass because the absorber-optimizing program found greater torque potential with this brass. In general, for best performance, the material composing the pendular masses should be as dense as possible, as long as the strength requirements are not violated.

Some Ideas for Further Study

Computer Simulation

The model absorber test provided results which should be directly compared to similar results generated with a computer. The equations of motion for the absorber should be rewritten to describe the performance of model-sized absorber attached to a 4-cylinder engine. Thus, the model absorber would be re-modeled on the computer and, then, directly compared to the original model. This comparison would help to determine if the model used in the computer simulation (Chapter 3) was reasonable.

The crankshaft was considered rigid for the absorber equations of motion. This simplified the equations. The assumption, however, may not be valid. Therefore, the equations of motion should be rewritten to account for the flexibility of the shaft. The computer simulation should then be run again to test the effect of using a rigid crankshaft.

The estimated value of the crankshaft inertia should be re-calculated to verify that the number used was reasonable.

Testing

The model absorber test should be expanded to cover a range of engine speeds and torques to attempt to find the limits of absorber effectiveness. The actual torque amplitude generated by the cam mechanism needs to be quantified, as does the inertia of the engine (drill, gears, etc...) of the model. It is possible that the model absorber might exhibit the same magnifying effect as the absorber in the computer model if its limits were tested. If no such limits were found, the computer model would need to be studied in depth to locate the source(s) of its inaccuracy.

Ideally, the prototype absorber test would be the critical measure of the value of the Speckhart absorber. The testing equipment used in the model absorber test should be modified as necessary for use with racing engines, which reach speeds 10 times that of the hand drill used in the model absorber test. This perhaps is impractical because of the stringent demands it would place on the testing equipment. However, because a real-life

application is more convincing than models, this test would be worth investigating.

BIBLIOGRAPHY

BIBLIOGRAPHY

Beyer, William H., *Standard Math Tables*, 28th Ed., CRC Press, Boca Raton, FL, 1987.

Bremer, Robert C. Jr. , *A Practical Treatise on Engine Crankshaft Torsional Vibration Control*, SP-445, Society of Automotive Engineers, Warrendale, PA, 1979.

Giesecke, Frederick E., Alva Mitchell, Henry Cecil Spencer, Ivan Leroy Hill, Robert Olin Loving and John Thomas Dygdon, *Engineering Graphics*, 3rd Ed., Macmillan Publishing Co., New York, 1985.

Meirovitch, Leonard, *Analytical Methods in Vibrations*, Macmillan Publishing Co., New York, 1967.

Oberg, Erik, Franklin D. Jones, Holbrook L. Horton and Henry H. Ryffel, *Machinery's Handbook*, 24th Ed., Industrial Press, New York, 1992.

Shigley, Joseph Edward and Charles R. Mishke, *Mechanical Engineering Design*, 5th Ed., McGraw-Hill Book Co., New York, 1989.

Speckhart, Frank H. and Walter L. Green, *A Guide to Using CSMP -- The Continuous System Modeling Program*, Prentice-Hall, Englewood Cliffs, NJ, 1976.

Taylor, Charles F., *The Internal Combustion Engine in Theory and Practice*, 2nd Ed., MIT Press, Cambridge, MA, 1985.

Thomson, William T., *Theory of Vibration with Applications*, 3rd Ed., Prentice-Hall, Englewood Cliffs, NJ, 1988.

APPENDICES

APPENDIX A

April 18, 1944. F. F. KISHLINE 2,346,972

VIBRATION DAMPENER

Filed June 12, 1941

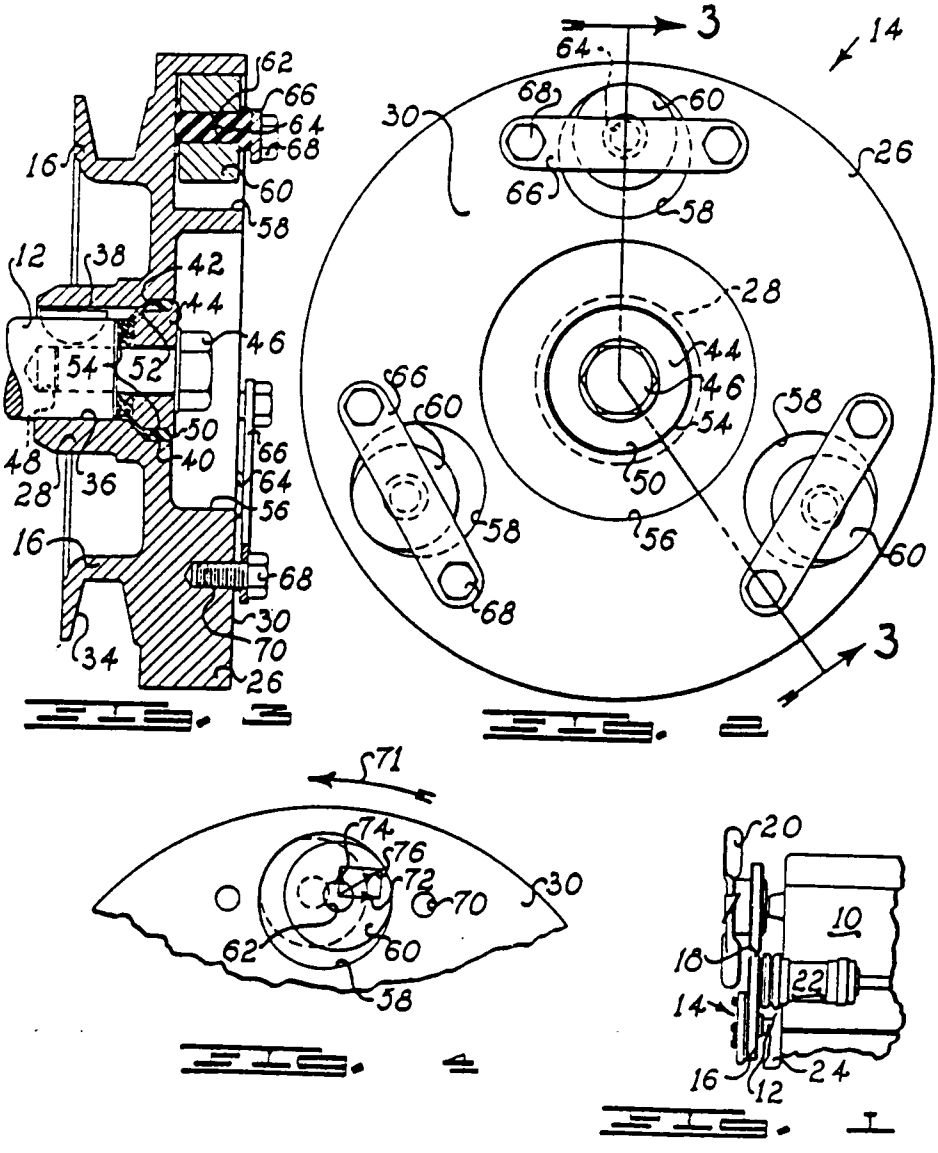

INVENTOR.
FLOYD F. KISHLINE
BY Carl J. Barbee
his attorney

UNITED STATES PATENT OFFICE

2,346,972

VIBRATION DAMPENER

Floyd F. Kishline, Kenosha, Wis., assignor to Nash Kelvinator Corporation, Kenosha, Wis., a corporation of Maryland

Application June 12, 1941, Serial No. 397,671

4 Claims. (Cl. 74—574)

This invention relates to dampeners and has particular reference to means for dampening the torsional vibrations in the crank shaft of an internal combustion motor.

The crank shaft of an automotive motor is subjected to a series of impulses due to the action of the various connecting rods applying forces thereto. When these impulses are applied to the crank shaft in the same phase as the natural frequency of vibration of the crank shaft, undesirable vibrations are set up and certain mechanisms have been employed to dampen or retard these vibrations, which mechanisms have taken the form of vibration dampeners which are usually attached to the forward end of the crank shaft, which is the end of the crank shaft opposite the main flywheel of the motor. These vibration dampeners have taken the form of an inertia member which is free to rotate slightly relative to the crank shaft in order to absorb a portion of the energy added to the crank shaft by the power impulses. These inertia members have been connected to the crank shaft through rubber connections and through various friction connections which permit this partial rotation and which will return the energy from the inertia member to the crank shaft at time intervals out of phase with the natural frequency of the crank shaft. It has also been suggested to mount eccentric inertia members on crank shafts which are spring balanced on the crank shaft so that relative movement between the inertia member and the crank shaft is restrained and retarded by spring pressure.

This invention provides means for mounting an inertia member on a crank shaft at a point eccentrically disposed with respect to the axis of rotation of the crank shaft. The inertia member is relatively free to move both radially and rotatively with respect to the crank shaft and to receive energy from and impart energy to the crank shaft to produce the desired dampening effect. More particularly the invention provides a series of inertia members which are symmetrically disposed about the axis of the crank shaft so that the inertia members do not statically unbalance the crank shaft.

The invention has as one of its objects the provision of a vibration dampener which will have no parts which are subject to wear and which may be easily assembled on the crank shaft.

It is another object of this invention to provide a vibration dampener which will not statically unbalance the crank shaft.

It is another object of this invention to provide means for retaining relatively free inertia members in a vibration dampener at points radially offset from the axis of rotation of the dampener at all times.

It is another object of this invention to provide inertia members in a vibration dampener which are mounted in such a manner that the centrifugal and inertia forces set up by angular acceleration of the crank shaft cause the inertia members to shift their position relative to the vibration dampener to absorb vibrations set up in the crank shaft.

Other objects and advantages of this invention will be apparent from a consideration of the following description and claims and the attached drawing, of which there is one sheet, and in which—

Figure 1 represents a side elevation of the front end of an internal combustion motor showing a vibration dampener in place thereon;

Figure 2 represents a front elevation of the vibration dampener shown in Figure 1;

Figure 3 represents a sectional view taken along a plane indicated by the line 3—3 in Figure 2 and looking in the direction of the arrows; and

Figure 4 represents a front elevation of a portion of the vibration dampener and illustrates the various positions taken by the inertia member during rotation of the crank shaft together with the forces operating on the inertia member.

Figure 1 illustrates an internal combustion motor 10 having a crank shaft, the forward end of which projects forwardly of the motor at 12 and to which is attached a vibration dampener generally indicated at 14. The vibration dampener carries the pulley section 16 arranged to drive a belt 18 which in turn drives the usual fan 20 and generator 22. The forward end of the crank shaft may be enclosed by and extend through a cover plate, a portion of which is shown at 24.

More specifically, the vibration dampener 14 consists of a wheel 26 preferably formed of cast iron so that it may act as an auxiliary flywheel. The wheel 26 has a hub portion 28 and a generally flat disc shaped portion 30. The back side of the disc portion 30 carries an annular pulley portion 16 which defines the V groove 34 (see Figure 3) within which the fan belt 18 is positioned. The hub 28 is provided with a central bore 36 which receives the end of the crank shaft 12 and a key 38 which secures the wheel 26 against rotation relative to the crank shaft. The forward end of the bore 36 is en-

larged as at 40 forming a beveled face at 42. The wheel is retained on the crank shaft by means of a washer 44 and cap screw 46 which extends through the washer and is threaded into a hole tapped in the forward end of the crank shaft as at 48. The washer 44 is provided with an annular flange 50 and a tapered face 52 which is arranged to bear against the beveled shoulder 42 on the wheel. Suitable sealing gaskets 54 are provided between the washer 44 and the walls of the bore 40 to prevent oil from the motor from leaking out along the end of the crank shaft 12.

The forward face of the disc portion 30 defines a central pocket 56 within which the cap screw 46 and washer 44 are recessed and a series of pockets 58 which are equally spaced around the disc 30 and radially offset from the center of the crank shaft.

In the particular embodiment of the invention illustrated, the pockets 58 have generally circular, cylindrical surfaces but are not necessarily limited to this shape. Positioned in each of the pockets 58 is a cylindrical inertia member 60 which is preferably made of steel or some other relatively hard and heavy material. The inertia members 60 have a central aperture 62 through which extend pegs 64 of rubber or some similar deformable material. The pegs 64 extend beyond the faces of the inertia member 60 and are lightly compressed between the back faces of the pockets 58 and tie bars 66. The ends of the tie bars are secured to the disc portion 30 by means of cap screws 68 threaded into holes 70 tapped in the disc portion 30 on each side of each aperture 58.

When the crank shaft is rotating as when the motor is operating, the inertia members 60 will be urged against the outer edge of the pockets 58 by the centrifugal force and will assume the positions shown in Figures 2 and 3. If the speed of the crank shaft were to remain perfectly constant, the inertia members would remain in this position at all times. The tie bars 66 and rubber pegs 64 prevent the inertia members from falling out of the pockets and from falling radially inwardly of the pockets 58 when the motor is stopped, thus preventing any rattling noise when the motor is started. However, as was explained before, the crank shaft speed does not remain constant but is subjected to a series of impulses tending to accelerate and decelerate the rotative speed of the crank shaft and wheel 26.

The action of the inertia members during acceleration and deceleration of the crank shaft and disc member 30 is most clearly illustrated in Figure 4 in which one of the inertia members 60 is shown to have moved along the surface of the pocket 58. Assuming the acceleration of the disc member 30 to be in the direction indicated by the arrow 71, the energy of the mass of the inertia member 60 will exert a force to the right indicated by the vector 72. The centrifugal force acting upon the inertia member 60 will continue to act radially outwardly of the vibration dampener as indicated by the vector 74. The resultant of these two vectors is indicated at 76 and indicates that the inertia member 60 will exert a force against the side wall of the pocket 58 opposing the forces tending to accelerate the vibration dampener and consequently tending to reduce the acceleration.

Attention is called to the fact that the inertia member 60 has been moved radially inwardly against the action of the centrifugal force and to the right against its inertia force. The inertia member has thus stored up energy which has been removed from the vibration dampener and crank shaft. As the acceleration of the crank shaft and vibration dampener is reduced to zero, the centrifugal force acting on the inertia member returns the inertia member to the outside of the pocket 58 as shown in Figure 2. While the exact movement of the inertia members cannot be watched due to the high speed rotation of the wheel on which they are carried, it is believed that the energy stored in the inertia member as just explained will cause the inertia member to overrun its center position and move slightly to the left as indicated by the dotted lines in Figure 4 and thus add energy to the crank shaft and vibration dampener. The inertia members 60 are believed to oscillate between the two positions shown in Figure 4 alternately absorbing and returning energy to the vibration dampener. Since this oscillation will be out of phase with the natural frequency of oscillation of the crank shaft and vibration dampener, it will act to counteract or smooth over the vibration of the crank shaft which is the result desired to be accomplished. The amplitude of movement of the inertia member, which is shown in an exaggerated degree in Figure 4, is so small and its frequency so great that the rubber peg 64 does not materially hinder the above described movement. The rubber peg will, however, act to dampen the oscillations of the inertia member and the degree of this dampening effect may be adjusted by changing the tightness of the screws 70.

Attention is called to the fact that the only wearing surface in the vibration dampener is between the side walls of the pockets 58 and the inertia member 60 which are formed of hard, wear resisting metal so that the vibration dampener as a whole is not apt to wear out. The rubber pegs 64, in addition to their dampening effect described above, serve only to retain the inertia members in position when the motor is stopped and to prevent the inertia members from falling out of the pockets. The pegs are flexible enough to permit the inertia members to oscillate in the pockets 58 without overly stressing the pegs. It is further to be noted that the vibration dampener will not statically unbalance the crank shaft and will not run eccentrically with respect to the crank shaft.

In connection with the static balance of the crank shaft, it will be noted that while the symmetrical spacing of the inertia members provides a statically balanced crank shaft assembly, this spacing of the inertia members and balancing of the crank shaft is not a necessary feature to the vibration dampening characteristics of the inertia members. The inertia members could be unequally spaced about the axis of the crank shaft with the proper static balance being obtained by varying the size and weight of the inertia members. It is conceivable that a single inertia member, statically balanced by proper fixed masses on the opposite side of the crank shaft, might be more desirable in some motors than the particular arrangement shown. It is further conceivable that the inertia members might be mounted directly on the crank shaft rather than on a separate wheel attached to the crank shaft.

While I have described my invention in some

detail, I intend this description to be an example only and not as a limitation of my invention, to which I make the following claims:

1. A vibration dampener comprising a wheel having a portion defining a series of cylindrical pockets equally spaced along a circle about the axis of said wheel, cylindrical inertia weights positioned in said pockets and defining apertures along their longitudinal axis, the diameter of said inertia weights being smaller than the diameter of said pockets, deformable members positioned in said apertures and extending beyond the faces of said weights, and retaining means bridging said pockets and contacting said deformable members to compress the same between said retaining means and the bottoms of said pockets.

2. A torsional vibration dampener for a rotating part comprising a member secured to said part for rotation therewith, said member defining a recess positioned eccentrically with respect to the axis of rotation of said member and having a surface containing elements extending parallel to said axis of rotation, said surface being concave with respect to said axis, an inertia weight having a cylindrical surface and defining an aperture therethrough concentric with respect to said surface, said weight being positioned in said recess and arranged to roll upon said surface, a rubber plug positioned in said aperture and extending beyond each face of said weight, and a strap secured to said member and extending across said recess and one end of said rubber plug whereby said plug is compressed slightly between the bottom of said recess and said strap.

3. A torsional vibration dampener for a rotating part comprising a member secured to said part for rotation therewith, said member defining a cylindrical recess positioned eccentrically with respect to the axis of rotation of said member, a cylindrical inertia weight apertured along the primary axis thereof, said weight being positioned in said recess and arranged to roll therein, a plug of compressible material positioned in said aperture and extending beyond each face of the weight, heads formed on the extending ends of said plug, and a strap secured to said member and spanning said recess and one end of said plug, said strap extending centrally across said recess and being of a width at least as great as the difference in diameter between the weight and the recess to insure registration of said plug end with said strap at all times.

4. A torsional vibration dampener for a rotating part comprising a member secured to said part for rotation therewith, said member defining a cylindrical recess positioned eccentrically with respect to the axis of rotation of said member, a cylindrical inertia weight smaller in diameter than said recess and apertured along the primary axis thereof, said weight being positioned in said recess and arranged to roll therein, said weight being shorter along the primary axis than said cylindrical recess, means spanning said recess to retain said weight therein, and means attached to said weight and extending therebeyond into contact with said member and said spanning means for damping chance oscillations of said weight.

FLOYD F. KISHLINE.

APPENDIX B

Prototype Vibration Absorber

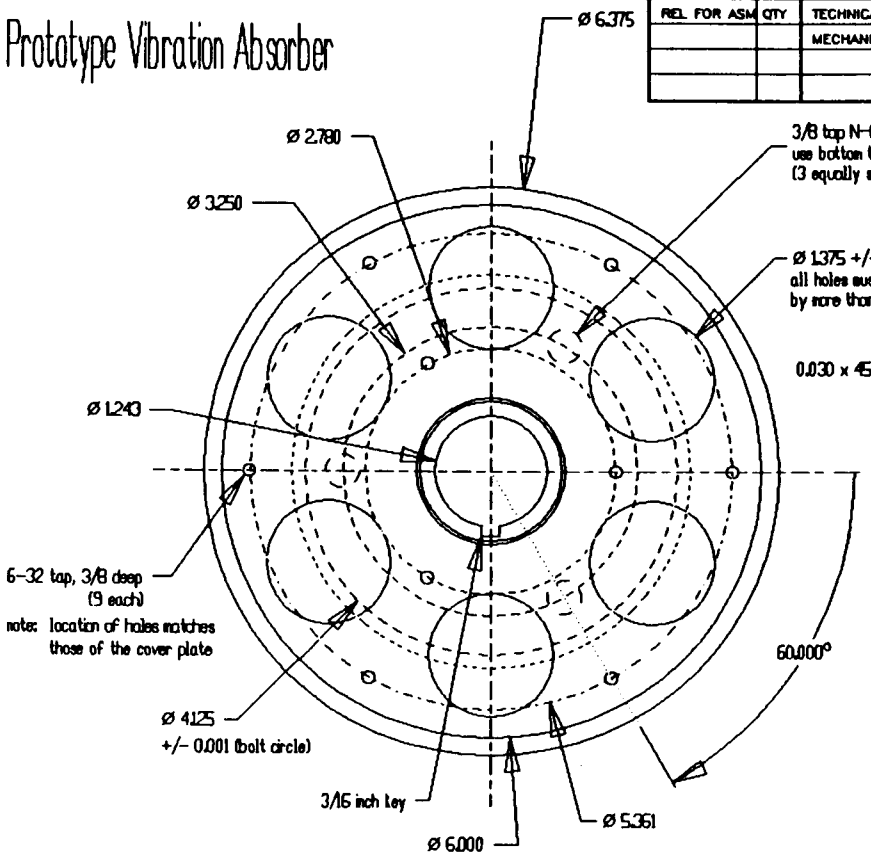

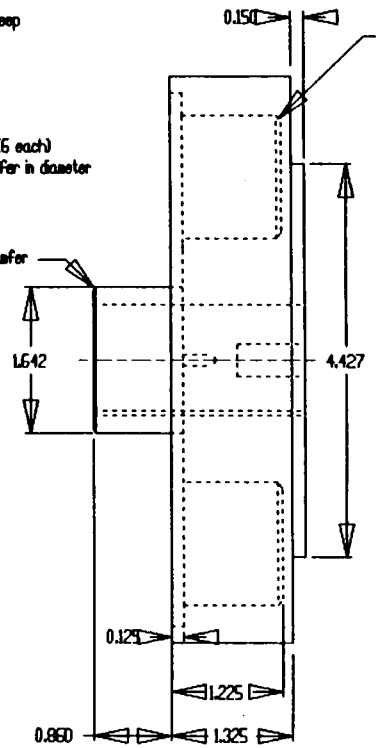

REL FOR ASM	QTY	TECHNICAL APPROVALS			INIT	DATE	EC #	P/N P/N HERE
		MECHANICAL						"A" SIZE TEMPLATE 0 .25" REAL SIZE

SCALE 1:2	DIMENSIONS IN INCHES		PART # P/N HERE		UT
MATERIAL Al 6061-T6	TOLERANCES UNLESS NOTED				
	LINEAR +/-	LINTOL	TITLE Prototype Absorber		
	ANGLES +/-	ANGTOL			
OTHER NOTES	RADII UNLESS NOTED	RADTOL	DESIGNER	jbs	02 FEB 93
	EDGE/ CORNER BREAKS OUTSIDE MAX	OUTBRK	CHECKED		
IBMCAD FILE PROTOTYP.DWG	EDGE/ CORNER BREAKS INSIDE MAX	INBRKL	APPROVED		

APPENDIX B

Prototype Cover Plate

REL FOR ASM	QTY	TECHNICAL APPROVALS			INIT	DATE	EC #	P/N P/N HERE
		MECHANICAL						"A" SIZE TEMPLATE 0 .25" REAL SIZE

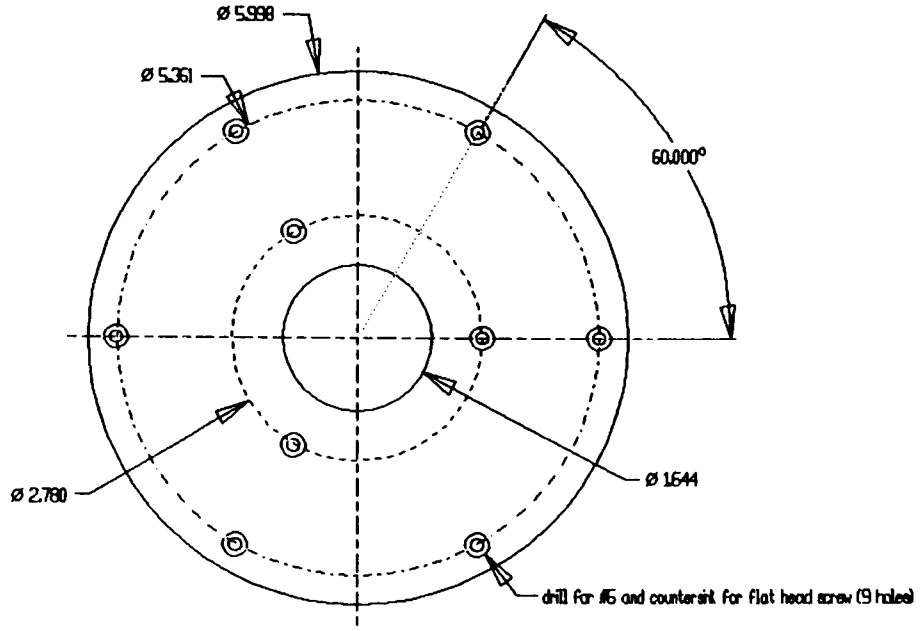

FRONT VIEW

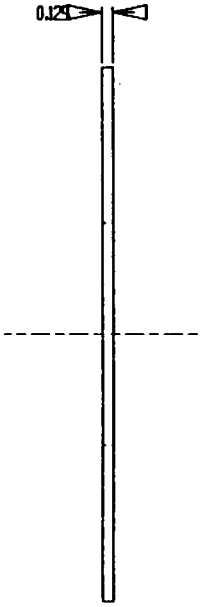

SIDE VIEW

SCALE 1:2	DIMENSIONS IN INCHES			PART # P/N HERE		UT
MATERIAL STEEL	TOLERANCES UNLESS NOTED					
	LINEAR +/-		LINTOL	TITLE DRAWING TITLE		
	ANGLES +/-		ANGTOL			
OTHER NOTES	RADII UNLESS NOTED		RADTOL	DESIGNER	jbs	03 FEB 93
	EDGE/ CORNER BREAKS	OUTSIDE MAX	OUTBRK	CHECKED		
IBMCAD FILE PROCOVER.DWG		INSIDE MAX	INBRKL	APPROVED		

APPENDIX B

APPENDIX C

NATURAL FREQUENCY DERIVATION

Lagrange's equation is used to write the equations of motion for a single pendular mass inside the cavity. For multiple masses of identical geometry, the natural frequencies are identical because the driving input is the same and each mass is uncoupled from the others. Therefore, the natural frequency of only one mass need be derived. The general form of Lagrange's equation is as follows:

$$\frac{d}{dt}\left(\frac{\partial T}{\partial \dot{q}_r}\right) - \frac{\partial T}{\partial q_r} + \frac{\partial V}{\partial q_r} = Q_{nc}$$

The terms for the non-conservative forces and the potential energy may be eliminated from this equation for this application. First, the driving force is irrelevant in a natural frequency calculation. While the natural frequency of only one pendular mass defines the natural frequency of all masses, the potential energy of the entire absorber depends on all of the masses. These masses are assumed to be statically balanced; thus the potential energy of the absorber is zero or some constant, depending on the choice of a reference point. Any derivative of the potential energy of the absorber will therefore be equal to zero. Consequently, the potential energy term for a single mass is eliminated because its effect is canceled when considered along with the other masses. The resulting form of Lagrange's equation, governing the motion of the pendular mass inside the cavity, is as follows:

$$\frac{d}{dt}\left(\frac{\partial T}{\partial \dot{\phi}}\right) - \frac{\partial T}{\partial \phi} = 0$$

The kinetic energy from this equation is expressed by:

$$T = \frac{1}{2} m_w v_w^2 + \frac{1}{2} I_w \dot{\theta}_w^2$$

Solving for v_w^2,

$$\begin{aligned}
\vec{v}_w &= \frac{d}{dt}\vec{r}_w \\
&= \frac{d}{dt}([r_3\cos\theta + r_2\cos\beta]\hat{i} + [r_3\sin\theta + r_2\sin\beta]\hat{j}) \\
&= (-r_3\dot{\theta}\sin\theta - r_2\dot{\beta}\sin\beta)\hat{i} + (r_3\dot{\theta}\cos\theta + r_2\dot{\beta}\cos\beta)\hat{j}
\end{aligned}$$

$$\begin{aligned}
v_w^2 &= |\vec{v}_w|^2 \\
&= r_3^2\dot{\theta}^2\sin^2\theta + 2r_2r_3\dot{\theta}\dot{\beta}\sin\theta\sin\beta + r_2^2\dot{\beta}^2\sin^2\beta \\
&\quad + r_3^2\dot{\theta}^2\cos^2\theta + 2r_2r_3\dot{\theta}\dot{\beta}\cos\theta\cos\beta + r_2^2\dot{\beta}^2\cos^2\beta \\
&= r_3^2\dot{\theta}^2(\sin^2\theta + \cos^2\theta) + r_2^2\dot{\beta}^2(\sin^2\beta + \cos^2\beta) \\
&\quad + 2r_2r_3\dot{\theta}\dot{\beta}(\sin\theta\sin\beta + \cos\theta\cos\beta) \\
&= r_3^2\dot{\theta}^2 + r_2^2\dot{\beta}^2 + 2r_2r_3\dot{\theta}\dot{\beta}\cos(\theta - \beta) \\
&= r_3^2\dot{\theta}^2 + r_2^2\dot{\beta}^2 + 2r_2r_3\dot{\theta}\dot{\beta}\cos\phi
\end{aligned}$$

Solving for $\dot{\theta}_w^2$,

$$\theta_w = \theta + \left[1 - \left(\frac{r_1}{r_w}\right)\right]\phi = \theta + C\phi$$

$$\Rightarrow \quad \dot{\theta}_w = \dot{\theta} + C\dot{\phi}$$

$$\Rightarrow \quad \dot{\theta}_w^2 = (\dot{\theta} + C\dot{\phi})^2$$

Thus, the expression for the kinetic energy becomes

$$T = \frac{1}{2}m_w(r_3^2\dot{\theta}^2 + r_2^2\dot{\beta}^2 + 2r_3r_2\dot{\theta}\dot{\beta}\cos\phi) + \frac{1}{2}I_w(\dot{\theta} + C\dot{\phi})^2$$

Taking the partial derivative with respect to ϕ,

$$\frac{\partial T}{\partial \phi} = \frac{1}{2}m_w(-2r_2r_3\dot{\theta}\dot{\beta}\sin\phi)$$
$$= -m_w(r_2r_3\dot{\theta}^2\sin\phi + r_2r_3\dot{\theta}\dot{\phi}\sin\phi)$$

Taking the partial derivative with respect to $\dot{\phi}$,

$$\frac{\partial T}{\partial \dot{\phi}} = \frac{1}{2}m_w(2r_2^2\dot{\beta} + 2r_2r_3\dot{\theta}\cos\phi) + \frac{1}{2}I_w(2C[\dot{\theta} + C\dot{\phi}])$$
$$= m_w(r_2^2\dot{\beta} + r_2r_3\dot{\theta}\cos\phi) + I_wC(\dot{\theta} + C\dot{\phi})$$

Then, taking the time derivative,

$$\frac{d}{dt}\left(\frac{\partial T}{\partial \dot{\phi}}\right) = m_w(r_w^2\dot{\beta} + r_2r_3[\ddot{\theta}\cos\phi - \dot{\theta}\dot{\phi}\sin\phi]) + I_wC(\ddot{\theta} + C\ddot{\phi})$$

Combining these derivatives in Lagrange's equation,

$$\frac{d}{dt}\left(\frac{\partial T}{\partial \dot{\phi}}\right) - \frac{\partial T}{\partial \phi} = m_w(r_2^2\dot{\beta} + r_2r_3[\ddot{\theta}\cos\phi + \dot{\theta}^2\sin\phi]) + I_wC(\ddot{\theta} + C\ddot{\phi}) = 0$$

$$\Rightarrow \quad m_w(r_2^2\ddot{\phi} + r_2 r_3\dot{\theta}^2\sin\phi) + I_w C^2\ddot{\phi} = -m_w(r_2^2\ddot{\theta} + r_2 r_3\ddot{\theta}\cos\phi - I_w C\ddot{\theta}$$

$$\Rightarrow \quad r_2^2\ddot{\phi} + r_2 r_3\dot{\theta}^2\sin\phi + \frac{1}{2}r_w^2 C^2\ddot{\phi} = -(r_2^2\ddot{\theta} + r_2 r_3\ddot{\theta}\cos\phi) - \frac{1}{2}r_w^2 C\ddot{\theta}$$

$$\Rightarrow \quad (r_2^2 + \frac{1}{2}r_w^2 C^2)\ddot{\phi} + r_2 r_3\dot{\theta}^2\sin\phi = -(r_2^2 + r_2 r_3\cos\phi + \frac{1}{2}r_w^2 C)\ddot{\theta}$$

Assuming ϕ to be small,

$$(r_2^2 + \frac{1}{2}r_w^2 C^2)\ddot{\phi} + r_2 r_3\dot{\theta}^2\phi = -(r_2^2 + r_2 r_3 + \frac{1}{2}r_w^2 C)\ddot{\theta}$$

So the natural frequency of the Speckhart absorber is defined by:

$$\omega_n = \omega\sqrt{\frac{r_2 r_3}{r_2^2 + \frac{1}{2}r_w^2 C^2}} \qquad \textbf{(C1)}$$

To balance an 8-cylinder engine, which has four power pulses per revolution,

$$\omega_n = 4\omega$$

$$\Rightarrow \quad \sqrt{\frac{r_2 r_3}{r_2^2 + \frac{1}{2}r_w^2 C^2}} = 4$$

$$\Rightarrow \quad r_2 r_3 = 16(r_2^2 + \frac{1}{2}r_w^2 C^2)$$

$$= 16(r_2^2 + \frac{1}{2}[r_w - r_1]^2)$$

$$= 16(r_2^2 + \frac{1}{2}r_2^2)$$

$$\Rightarrow \quad r_3 = 24r_2 = 24(r_1 - r_w) \qquad \textbf{(C2)}$$

APPENDIX D

OPPOSING TORQUE DERIVATION

The normal and tangential components of the acceleration of the pendular mass inside the cavity is shown in Fig. D1(a). Fig. D1(b) shows the normal and tangential components of the force which the absorber body must exert on the pendular mass for it to have the

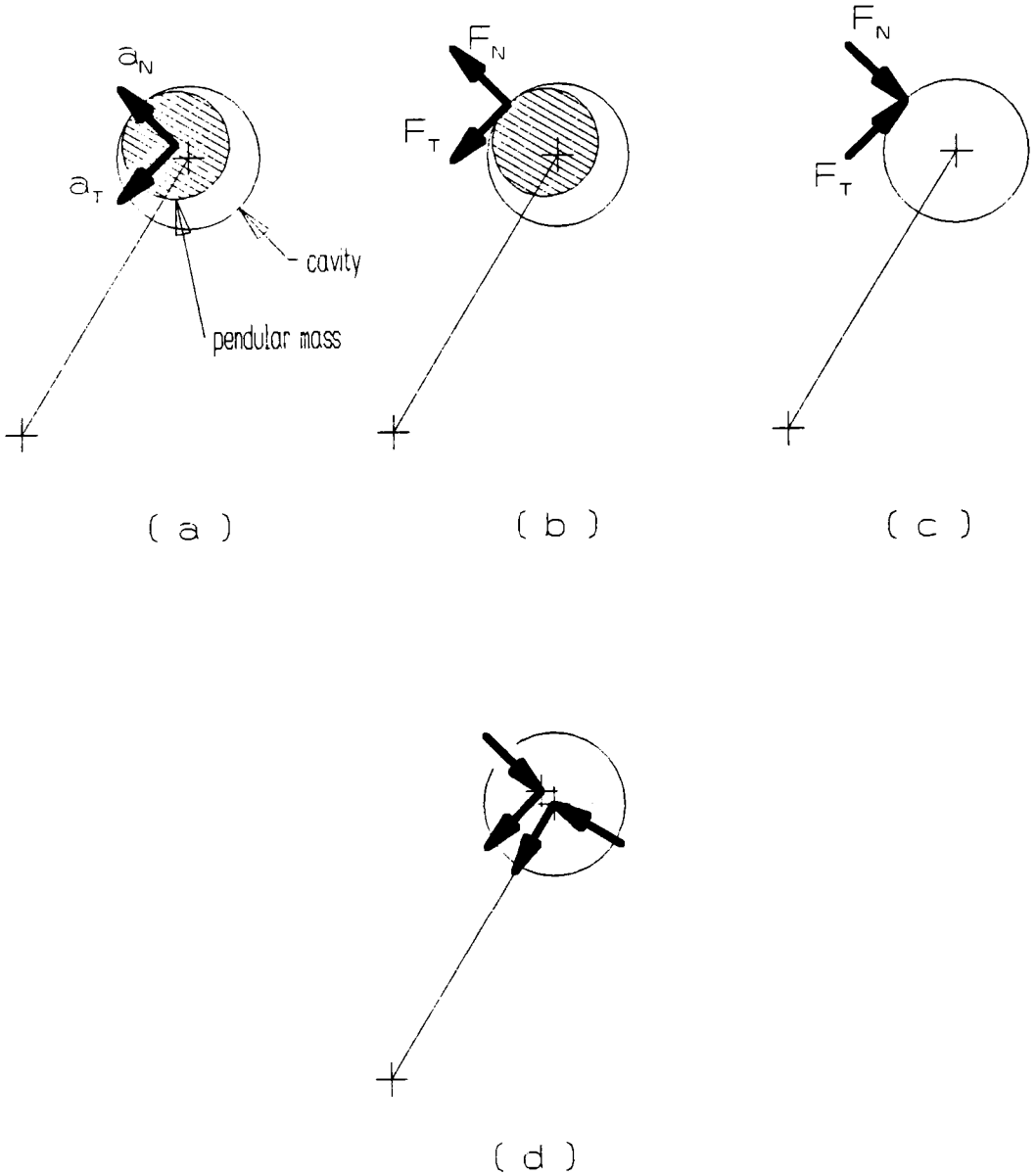

Figure D1 Sketches of Acceleration and Force Components for Pendular Mass

acceleration indicated in Fig. D1(a). Note that all forces between the absorber body and the pendular mass are transmitted through the single contact point. The inertial forces exerted by the pendular mass on the absorber body are equal in magnitude and opposite in direction to the forces the absorber exerts on the pendular mass, as illustrated in Fig. D1(c). The opposing torque on the absorber, provided by the pendular mass, is described by

$$\begin{aligned} M_o &= -F_N(r_3\sin\phi) - F_T(r_3\cos\phi + r_1) \\ &= m_w[-a_N(r_3\sin\phi) - a_T(r_3\cos\phi + r_1)] \end{aligned}$$

Using Fig. D1(d) to solve for a_N and a_T,

$$\begin{aligned} a_N &= -r_2\beta^2 - r_3\dot{\theta}^2\cos\phi + r_3\ddot{\theta}\sin\phi \\ a_T &= r_2\beta + r_3\dot{\theta}^2\sin\phi + r_3\ddot{\theta}\cos\phi \end{aligned}$$

Letting m represent the combined mass of all the pendular masses and employing the expressions for a_N and a_T above, the opposing torque becomes

$$\begin{aligned} M_o &= m[r_2r_3\sin\phi\beta^2 - r_3^2\sin\phi(\ddot{\theta}\sin\phi - \dot{\theta}^2\cos\phi) \\ &\quad - (r_3 + r_1)[r_2\beta + r_3(\ddot{\theta}\cos\phi + \dot{\theta}^2\sin\phi)]] \\ &= m[r_2r_3\sin\phi\beta^2 - r_1r_3\sin\phi\dot{\theta}^2 - r_2(r_1 + r_3\cos\phi)\beta \\ &\quad - r_3(r_1\cos\phi + r_3)\ddot{\theta}] \end{aligned} \qquad \textbf{(D1)}$$

APPENDIX E

COEFFICIENT OF FRICTION DERIVATION

The minimum coefficient of friction necessary for the pendular mass to roll inside the cavity without slipping is given by

$$\mu = \left|\frac{F_T}{F_N}\right| = \left|\frac{a_T}{a_N}\right|$$

The normal and tangential forces in the above equation are shown in Fig. E1.

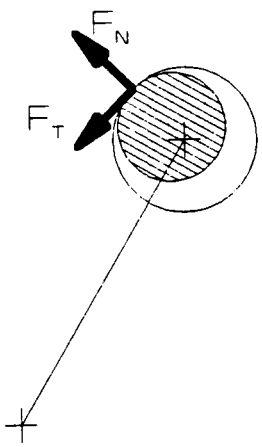

Figure E1 Normal and Tangential Forces between Pendular Mass and Absorber Body

The expressions for a_N and a_T were derived in Appendix D and are repeated below

$$a_N = -r_2\beta^2 - r_3\dot{\theta}^2\cos\phi + r_3\ddot{\theta}\sin\phi$$
$$a_T = r_2\beta + r_3\dot{\theta}^2\sin\phi + r_3\ddot{\theta}\cos\phi$$

Thus, the formula for the coefficient of friction becomes

$$\mu = \left| \frac{r_2\ddot{\beta} + r_3\dot{\theta}^2\sin\phi + r_3\ddot{\theta}\cos\phi}{r_2\dot{\beta}^2 + r_3\dot{\theta}^2\cos\phi - r_3\ddot{\theta}\sin\phi} \right| \qquad \textbf{(E1)}$$

APPENDIX F

ENGINE TORQUE DERIVATION

An equation for the engine torque, provided by the idealized engine in the computer model, was necessary to simulate the performance of the engine with and without the two absorbers. The shape of the engine torque curve was derived using Taylor's Eqn. 8-53, which represents the gas-pressure torque resulting on the crankshaft for a single-cylinder, 4-cycle engine. This equation, adapted for a zero mean torque, is given below.

$$M(t) = \sum_{n=.5,1,1.5,etc}^{\infty} W_n \sin(n\theta + \phi_n) \qquad \textbf{(F1)}$$

Taylor (1985) provides the coefficients, W_n and ϕ_n, for a 4-cycle engine (compression ratio 6.0). An example of the gas-pressure torque for a single-cylinder is shown in Fig. F1, which was generated using Eqn. F1 and the coefficients provided by Taylor, up through the harmonic order 5; the curve shown has been normalized so that the peak torque is equal to one.

For multicylinder engines with even firing intervals, the expression for the gas-pressure torque must include the number of cylinders and the angle α, the number of crank degrees between successive arrivals at firing top center. Thus, Eqn. F1 becomes Eqn. F2.

$$M(t) = \sum_{n=.5,1,1.5,etc}^{\infty} \sum_{cn=0}^{no.of cylinders-1} W_n \sin\left(n\left[\theta + (cn\,\alpha)\right] + \phi_n\right) \qquad \textbf{(F2)}$$

The angle α is determined by dividing the number of degrees of crankshaft revolution in one complete cycle by the total number of cylinders. So, for the idealized engine of this thesis,

$$\alpha = \frac{4\pi}{8} = \frac{\pi}{2}$$

$$\Rightarrow \quad cn\alpha = 0, \frac{\pi}{2}, \pi, \frac{3\pi}{2}, \ldots, \frac{7\pi}{2}$$

Using Eqn. F2 and considering any single order, n, the expression for the gas-pressure torque of only that order was derived and is given as Eqn. F3. Note that for every pair of sine terms in that equation which differ only by a phase shift of π, that pair cancels. Thus, for any single order for the idealized engine (or for any even-firing engine having an even number of cylinders), the phase difference between successive terms must be

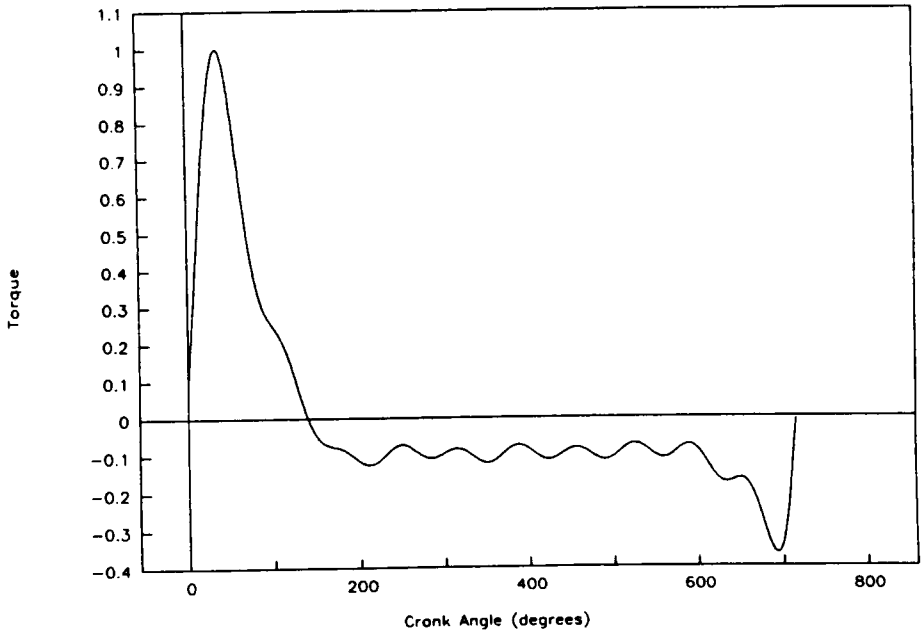

Figure F1 Typical Curve of Gas-pressure Torque for Single-cylinder, Four-cycle Engine

equal to one full revolution of the crankshaft (2π) or some multiple of it for the entire order not to cancel.

$$\begin{aligned} M_{n\text{-}only} = {} & W_n \sin(n\theta + \phi_n) + W_n \sin\left(n\theta + \phi_n + n\frac{\pi}{2}\right) \\ & + W_n(n\theta + \phi_n + n\pi) + W_n \sin\left(n\theta + \phi_n + n\frac{3\pi}{2}\right) \\ & + \ldots + W_n \sin\left(n\theta + \phi_n + n\frac{7\pi}{2}\right) \end{aligned} \qquad \textbf{(F3)}$$

The phase difference, corresponding to orders which do not cancel in the idealized engine, may be related to the harmonic order of the engine and used to find the significant orders.

$$n\alpha = n\frac{\pi}{2} = 2\pi \qquad \Rightarrow n = 4$$

So for an 8-cylinder engine with an even firing sequence, the only orders which are significant are order 4 and multiples of it (8, 12, 16, etc ...). In practice, no engine is perfect; therefore, some degree of torque is present at the other harmonics, although these variations are small. The value of the coefficients in Eqn. F2 become very small above the eighth order, and as a result the terms corresponding to these orders are negligible, leaving only orders four and eight remaining in the engine (gas-pressure) torque equation. Figure F2 shows the shape of the engine torque curves for one revolution of the crankshaft for order four alone and for orders four and eight. The curves have been normalized so that the amplitude of the fourth-order curve is equal to one. Figure F2 illustrates that the fourth-order curve very closely approximates the more-accurate fourth-and-eighth-order curve. For this reason, the engine torque shape used in this thesis was a simple sine wave at four times the frequency of the crankshaft.

$$M(t) = M\sin(4\omega t) \qquad \textbf{(F4)}$$

For the purpose of calculating the SRR, it was necessary to derive the formula for the change in rotational velocity of the crankshaft at steady-state for an idealized engine ($\Delta\omega_e$), having an inertia equivalent to the engine plus the inertia of the device being compared (damper or absorber). This derivation begins with the formula for change in angular momentum

$$I_{eq}\Delta\omega_e = \int M(t)dt = \int M\sin 4\omega t\, dt$$

For a sinusoidal torque input, the positive change in angular velocity occurs as long as the torque is positive. An accompanying negative change occurs while the torque is negative. A sinusoid at four times the crankshaft speed (4ω) has four positive intervals

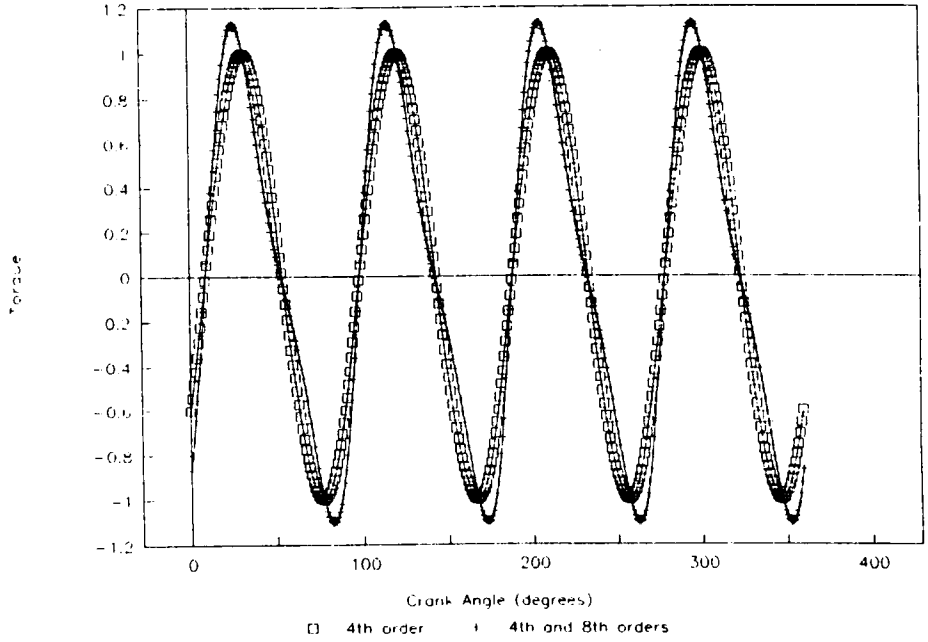

Figure F2 Net Engine Torque from All Cylinders for Idealized Engine

and four negative intervals, each lasting one eighth of the period of the crankshaft. To calculate the magnitude of change in engine speed, only one of these intervals need be considered. Choosing the first eighth of the period and solving for $\Delta\omega_e$ ...

$$\Delta\omega_e = -\frac{M}{4\omega I_{eq}} \cos 4\omega t \Big|_0^{\frac{\pi}{4\omega}}$$

$$= \frac{M}{2\omega I_{eq}}$$

APPENDIX G

EQUATIONS OF MOTION DERIVATION

The equations of motion for the Speckhart absorber and an idealized engine are derived from Lagrange's equation for multiple coordinates

$$\frac{d}{dt}\left\{\frac{\partial T}{\partial \dot{q}_r}\right\} - \left\{\frac{\partial T}{\partial q_r}\right\} + \left\{\frac{\partial V}{\partial q_r}\right\} = \{Q_{nc}\}$$

The potential energy terms are eliminated for the same reason described in Appendix C. Thus, Lagrange's equations for this system become

$$\frac{d}{dt}\left(\frac{\partial T}{\partial \dot{\theta}}\right) - \frac{\partial T}{\partial \theta} = M(t)$$

$$\frac{d}{dt}\left(\frac{\partial T}{\partial \dot{\phi}}\right) - \frac{\partial T}{\partial \phi} = M_f(t)$$

The kinetic energy from these equations is expressed by

$$T = \frac{1}{2}(I_m + I_a)\dot{\theta}^2 + \frac{1}{2}I\dot{\theta}_w^2 + \frac{1}{2}mv_w^2$$

Combining the expressions for v_w^2 and $\dot{\theta}_w^2$, which were derived in Appendix C, the kinetic energy term becomes

$$T = \frac{1}{2}(I_m + I_a)\dot{\theta}^2 + \frac{1}{2}m(r_3^2\dot{\theta}^2 + r_2^2\dot{\beta}^2 + 2r_3r_2\dot{\theta}\dot{\beta}\cos\phi) + \frac{1}{2}I(\dot{\theta} + C\dot{\phi})^2$$

Taking the partial derivative with respect to θ,

$$\frac{\partial T}{\partial \theta} = 0$$

Taking the partial derivative with respect to ϕ,

$$\begin{aligned}\frac{\partial T}{\partial \phi} &= m(-r_2 r_3 \dot{\theta}\dot{\beta}\sin\phi) \\ &= -m(r_2 r_3 \dot{\theta}^2 \sin\phi + r_2 r_3 \dot{\theta}\dot{\phi}\sin\phi)\end{aligned}$$

Taking the partial derivative with respect to $\dot{\theta}$,

$$\frac{\partial T}{\partial \dot{\theta}} = (I_m + I_a)\dot{\theta} + I(\dot{\theta} + C\dot{\phi}) + m(r_3^2\dot{\theta} + r_2^2\dot{\beta} + r_2 r_3 \cos\phi[2\dot{\theta} + \dot{\phi}])$$

Taking the partial derivative with respect to $\dot{\phi}$,

$$\frac{\partial T}{\partial \dot{\phi}} = m(r_2^2\dot{\beta} + r_2 r_3 \dot{\theta}\cos\phi) + IC(\dot{\theta} + C\dot{\phi})$$

Then, taking the time derivatives,

$$\begin{aligned}\frac{d}{dt}\left(\frac{\partial T}{\partial \dot{\theta}}\right) &= (I_m + I_a)\ddot{\theta} + I(\ddot{\theta} + C\ddot{\phi}) + m(r_3^2\ddot{\theta} + r_2^2\ddot{\beta} \\ &\quad + r_2 r_3[\cos\phi(2\ddot{\theta} + \ddot{\phi}) - \sin\phi\dot{\phi}(2\dot{\theta} + \dot{\phi})]) \\ \frac{d}{dt}\left(\frac{\partial T}{\partial \dot{\phi}}\right) &= m(r_2^2\ddot{\beta} + r_2 r_3[\cos\phi\ddot{\theta} - \sin\phi\dot{\theta}\dot{\phi}]) + IC(\ddot{\theta} + C\ddot{\phi})\end{aligned}$$

Combining these derivatives in Lagrange's equation,

$$\frac{d}{dt}\left(\frac{\partial T}{\partial \dot{\theta}}\right) - \frac{\partial T}{\partial \theta} = M(t):$$

$$(mr_2^2 + mr_2 r_3 \cos\phi + IC)\ddot{\phi} + (mr_3^2 + mr_2^2 + 2mr_2 r_3 \cos\phi + I + I_m + I_a)\ddot{\theta} = mr_2 r_3 \sin\phi\dot{\phi}(2\dot{\theta} + \dot{\phi}) + M\sin(4\omega t) \quad \textbf{(G1)}$$

$$\frac{d}{dt}\left(\frac{\partial T}{\partial \dot{\phi}}\right) - \frac{\partial T}{\partial \phi} = M_f(t):$$

$$(mr_2^2 + IC^2)\ddot{\phi} + (mr_2^2 + mr_2 r_3 \cos\phi + IC)\ddot{\theta} = -mr_2 r_3 \sin\phi\dot{\theta}^2 - c_f\dot{\phi} \quad \textbf{(G2)}$$

APPENDIX H

DAMPER EQUATIONS OF MOTION DERIVATION

Damper and Crankshaft

Figure H1 is a schematic representation of a viscous-fluid damper mounted to the crankshaft. The equivalent system in symbolic form is given in Figure H2.

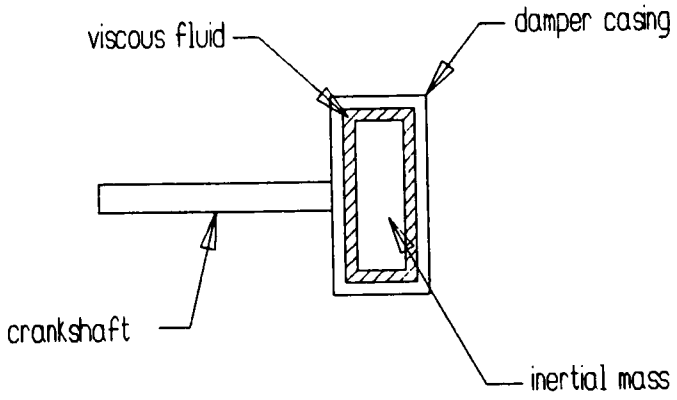

Figure H1 Schematic of Viscous-fluid Damper and Crankshaft

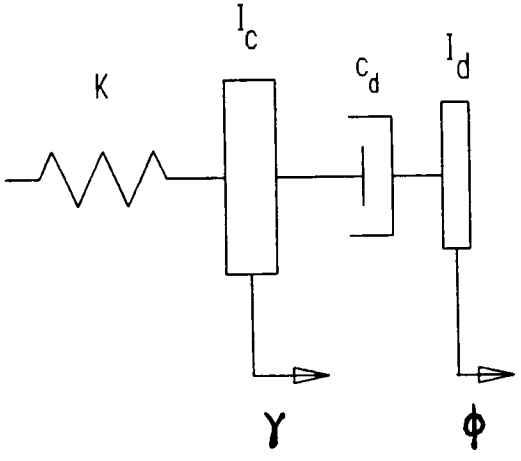

Figure H2 Symbolic Representation of Viscous-fluid Damper and Crankshaft

If a periodic torque at four times the engine speed is applied to the crankshaft, the equations of motion which govern the damper are given by

$$I_c\ddot{\gamma} + c_d(\dot{\gamma} - \dot{\phi}) + K\gamma = Me^{i4\omega t} \qquad \textbf{(H1)}$$

$$I_d\ddot{\phi} - c_d(\dot{\gamma} - \dot{\phi}) = 0 \qquad \textbf{(H2)}$$

Assuming that γ and ϕ have a steady-state, periodic solution at four times the engine speed, they, along with their first two derivatives, may be represented by

$$\gamma = \gamma_1 e^{i4\omega t} \Rightarrow \dot{\gamma} = i4\omega\gamma_1 e^{i4\omega t} \Rightarrow \ddot{\gamma} = -16\omega^2\gamma_1 e^{i4\omega t}$$

$$\phi = \phi_1 e^{i4\omega t} \Rightarrow \dot{\phi} = i4\omega\phi_1 e^{i4\omega t} \Rightarrow \ddot{\phi} = -16\omega^2\phi_1 e^{i4\omega t}$$

where γ_1 and ϕ_1 are the amplitudes of γ and ϕ, respectively. Substituting these into Eqns. H1 and H2 and simplifying, the equations of motion become

$$\left[(-16\omega^2 I_c + K) + (4\omega c_d)i\right]\gamma_1 + \left[-(4\omega c_d)i\right]\phi_1 = M \qquad \textbf{(H3)}$$

$$\left[-(4\omega c_d)i\right]\gamma_1 + \left[(-16\omega^2 I_d) + (4\omega c_d)i\right]\phi_1 = 0 \qquad \textbf{(H4)}$$

Using these equations, the change in engine speed with the damper in place is computed by

$$\Delta\omega_d = 2(4\omega)(\gamma_1 - \phi_1) \qquad \textbf{(H5)}$$

Because the algebra involved is somewhat tedious, a computer was used to perform these calculations. The program used follows.

Program Used for Damper and Crankshaft

```
CLS

REM     DAMPER1.BAS
REM     Jeffrey B. Sharpe
REM     10 March 1993

OPEN "M:\JBS\THESIS\PROGRAMS\DATA\DAMP1.PRN" FOR OUTPUT AS #1

DIM THETA(5, 1001), TDOT(5, 1001), RATIO(5, 1001)

K = 222300                      'torsional stiffness (in-lb/rad)
M = 400                         'engine torque amplitude (ft-lb)
IM = 5                          'engine inertia (lb s^2 in)
OD = 8                          'outer diameter (in)
RW = 1                          'ring width (in)
RT = 1                          'ring thickness (in)
GAP = .125                      'gap between case and ring (in)
TC = .125                       'thickness of case material (in)
DC = .286                       'density of case material (in)
DR = .286                       'density of ring material (in)
PI = 3.14159265358#


M = M * 12                      'convert torque to in-lb

REM     **** solve for Ic and Id ****
R1 = OD / 2
R2 = R1 - TC
R3 = R2 - GAP
R4 = R3 - RW
DC = DC / 386
DR = DR / 386
M1 = DC * PI * (R1 ^ 2) * (RT + (2 * GAP) + (R * TC))
M2 = DC * PI * (R2 ^ 2) * (RT + (2 * GAP))
M3 = DR * PI * (R3 ^ 2) * RT
M4 = DR * PI * (R4 ^ 2) * RT
IC = (.5 * M1 * (R1 ^ 2)) - (.5 * M2 * (R2 ^ 2))
ID = (.5 * M3 * (R3 ^ 2)) - (.5 * M4 * (R4 ^ 2))

REM     **** solve for change in speed for various cd's and rpm's ****
FOR CD = 0 TO 500 STEP 100
   J = CD / 100
   FOR RPM = 1000 TO 9000 STEP 10
      JJ = (RPM - 1000) / 10
      W = RPM / 60 * 2 * PI
      W2 = W ^ 2
      A = K - (16 * W2 * IC)
      B = 4 * W * CD
      C = -16 * W2 * ID
      MDET = (((A * C) ^ 2) + ((B * (A + C)) ^ 2)) ^ .5
      THETA(J, JJ) = ((((M * C) ^ 2) + ((M * B) ^ 2)) ^ .5) / MDET
      TDOT(J, JJ) = 4 * W * THETA(J, JJ)
   NEXT RPM
NEXT CD
```

```
REM      **** solve for the speed reduction ratio ****
FOR J = 1 TO 5
   FOR RPM = 1000 TO 9000 STEP 10
   JJ = (RPM - 1000) / 10
   RATIO(J, JJ) = TDOT(J, JJ) / TDOT(0, JJ)
   NEXT RPM
NEXT J

REM      **** write data to output file ****
FOR RPM = 1000 TO 9000 STEP 10
   JJ = (RPM - 1000) / 10
   WRITE #1, RPM, RATIO(1, JJ), RATIO(2, JJ), RATIO(3, JJ), RATIO(4, JJ), RATIO(5, JJ)
NEXT RPM

CLOSE #1
END
```

Damper, Crankshaft and Engine

Figure H3 is a schematic representation of a viscous-fluid damper coupled with an idealized engine.

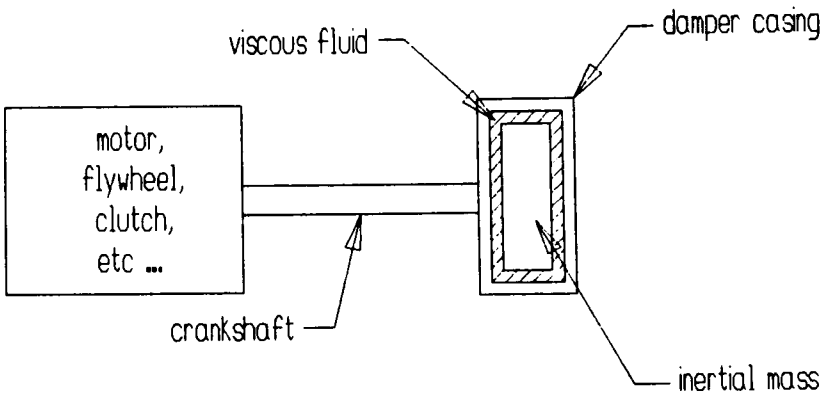

Figure H3 Schematic of Viscous-fluid Damper Coupled to Idealized Engine

The equivalent system in symbolic form is given in Figure H4.

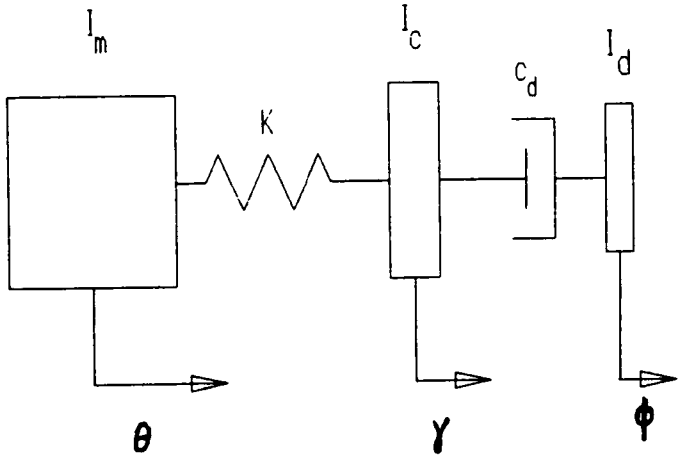

Figure H4 Symbolic Representation of Viscous-fluid Damper Coupled to Engine

Applying a periodic torque at four times the engine speed to the crankshaft, the equations of motion for the damper become

$$I_m\ddot{\theta} + K(\theta - \gamma) = M(t) \qquad \textbf{(H6)}$$

$$I_c\ddot{\gamma} + c_d(\dot{\gamma} - \dot{\phi}) - K(\theta - \gamma) = 0 \qquad \textbf{(H7)}$$

$$I_d\ddot{\phi} - c_d(\dot{\gamma} - \dot{\phi}) = 0 \qquad \textbf{(H8)}$$

Assuming steady-state, periodic solutions, the expressions for γ, ϕ and their first two derivatives remain the same, while the representation of θ and its first two derivatives is given by

$$\theta = \theta_1 e^{i4\omega t} \Rightarrow \dot{\theta} = i4\omega\theta_1 e^{i4\omega t} \Rightarrow \ddot{\theta} = -16\omega^2\theta_1 e^{i4\omega t}$$

where θ_1 is the amplitude of θ. Substituting these values into Eqns. H6 - H8 and simplifying, the equations of motion become

$$\left[K - 16\omega^2 I_m\right]\theta_1 - [K]\gamma_1 + [0]\phi_1 = M \tag{H9}$$

$$[-K]\theta_1 + \left[\left(K - 16\omega^2 I_c\right) + \left(4\omega c_d\right)i\right]\gamma_1 + \left[-4\omega c_d i\right]\phi_1 = 0 \tag{H10}$$

$$[0]\theta_1 + \left[-4\omega c_d i\right]\gamma_1 + \left[\left(-16\omega^2 I_d\right) + \left(4\omega c_d i\right)\right]\phi_1 = 0 \tag{H11}$$

The change in engine speed with the damper couple to an idealized engine were calculated using these equations and Eqn. H5. The calculations were performed with the computer code which follows.

Program Used for Damper Coupled to Idealized Engine

```
CLS

REM    DAMPER3.BAS
REM    Jeffrey B. Sharpe
REM    10 March 1993

OPEN "M:\JBS\THESIS\PROGRAMS\DATA\DAMP3.PRN" FOR OUTPUT AS #1

DIM THETA(5, 1001), TDOT(5, 1001), LAMDA(5, 1001), LDOT(5, 1001)
DIM PHI(5, 1001), PDOT(5, 1001), MD(5, 1001), RATIO(5, 1001)

K = 222300          'torsional stiffness (in-lb/rad)
M = 400             'engine torque amplitude (ft-lb)
IM = 5              'engine inertia (lb s^2 in)
OD = 8              'outer diameter (in)
RW = 1              'ring width (in)
RT = 1              'ring thickness (in)
GAP = .125          'gap between case and ring (in)
TC = .125           'thickness of case material (in)
DC = .286           'density of case material (lb/in^3)
DR = .286           'density of ring material (lb/in^3)
```

```
PI = 3.14159265358#

M = M * 12                          'convert torque to in-lb

REM     **** solve for Ic and Id ****
R1 = OD / 2
R2 = R1 - TC
R3 = R2 - GAP
R4 = R3 - RW
DC = DC / 386
DR = DR / 386
M1 = DC * PI * (R1 ^ 2) * (RT + (2 * GAP) + (R * TC))
M2 = DC * PI * (R2 ^ 2) * (RT + (2 * GAP))
M3 = DR * PI * (R3 ^ 2) * RT
M4 = DR * PI * (R4 ^ 2) * RT
IC = (.5 * M1 * (R1 ^ 2)) - (.5 * M2 * (R2 ^ 2))
ID = (.5 * M3 * (R3 ^ 2)) - (.5 * M4 * (R4 ^ 2))


REM     **** solve for change in speed for various cd's and rpm's ****
FOR CD = 0 TO 500 STEP 100
   J = CD / 100
   FOR RPM = 1000 TO 9000 STEP 10
      JJ = (RPM - 1000) / 10
      W = RPM / 60 * 2 * PI
      W2 = W ^ 2
      A = K - (16 * W2 * IM)
      B = K
      C = K - (16 * W2 * IC)
      D = 4 * W * CD
      E = -16 * W2 * ID
      F = E * ((A * C) - (B ^ 2))
      G = (A * D * (C + E)) - ((B ^ 2) * D)
      MDET = ((F ^ 2) + (G ^ 2)) ^ .5
      THETA(J, JJ) = M * ((((C * E) ^ 2) + ((D ^ 2) * ((C + E) ^ 2))) ^ .5) / MDET
      LAMDA(J, JJ) = M * B * (((E ^ 2) + (D ^ 2)) ^ .5) / MDET
      PHI(J, JJ) = M * B * D / MDET
      TDOT(J, JJ) = 4 * W * THETA(J, JJ)
      LDOT(J, JJ) = 4 * W * LAMDA(J, JJ)
      PDOT(J, JJ) = 4 * W * PHI(J, JJ)
      MD(J, JJ) = 4 * W * CD * (LAMDA(J, JJ) - PHI(J, JJ))
   NEXT RPM
NEXT CD

REM     **** solve for speed reduction ratio ****
FOR J = 1 TO 5
   FOR RPM = 1000 TO 9000 STEP 10
   JJ = (RPM - 1000) / 10
   RATIO(J, JJ) = TDOT(J, JJ) / TDOT(0, JJ)
   NEXT RPM
NEXT J

REM     **** write data to output file ****
FOR RPM = 1000 TO 9000 STEP 10
   JJ = (RPM - 1000) / 10
```

```
   WRITE #1, RPM, RATIO(1, JJ), RATIO(2, JJ), RATIO(3, JJ), RATIO(4, JJ), RATIO(5, JJ)
NEXT RPM

CLOSE #1
END
```

APPENDIX I

Sample Data

Peak Engine Torque: 10 ft-lb
Cycle-average Engine Speed: 3000 rpm
8-Inch Outside Diameter Speckhart Absorber

All Data Given
at Steady-state

TIME	PHI	PHI-DOT	THETA-DOT	PHI-DDOT	W-DOT	MO	MU
2.004536	0.02492459	-10.57914	314.1685	-40434.38	3.221535	92.23798	0.007593669
2.004692	0.02280982	-16.47159	314.1694	-37867.61	5.840388	86.81023	0.006637289
2.004861	0.01954499	-22.12829	314.1708	-33627.8	8.383736	77.82094	0.005248599
2.00504	0.01511314	-27.05927	314.1727	-27538.38	10.74435	64.75964	0.003480309
2.005236	0.00942681	-30.86353	314.1752	-19522.58	12.73627	47.54536	0.001276827
2.005421	0.00348711	-32.76717	314.1778	-10266.6	14.04661	26.80337	0.000675831
2.005574	-0.001552529	-33.0013	314.18	-1534.754	14.54321	6.393664	0.001980796
2.005727	-0.006535307	-32.02259	314.1822	6415.456	14.43704	-11.503	0.003555474
2.00587	-0.01098798	-30.03715	314.1842	13892.29	13.82559	-28.70284	0.004814089
2.00603	-0.01554777	-26.66745	314.1862	21059.2	12.69344	-44.72178	0.006304888
2.006205	-0.0197976	-21.77014	314.1881	28077.72	10.89944	-60.79105	0.007558535
2.006393	-0.02330875	-15.3272	314.1897	34276.62	8.395441	-75.42465	0.008434552
2.006584	-0.02553806	-7.934508	314.1907	38848.29	5.300279	-86.84255	0.008738889
2.006762	-0.02630224	-0.6284506	314.191	41190.39	1.987311	-93.32217	0.008540854
2.006902	-0.02598598	5.148837	314.1909	41447.54	-0.9659624	-94.66647	0.00815072
2.007042	-0.02485741	10.82271	314.1904	40306.21	-3.545067	-92.73102	0.007545401
2.007193	-0.02278696	16.52043	314.1895	37793.07	-6.10605	-87.75912	0.006594605
2.007362	-0.01951609	22.16889	314.188	33594.22	-8.654403	-79.09238	0.005179866
2.007541	-0.01507809	27.09146	314.186	27494.06	-11.0225	-65.9313	0.003420808
2.007737	-0.009363825	30.89578	314.1835	19450.17	-12.96411	-48.30149	0.001228741
2.007923	-0.003426548	32.77951	314.1808	10170.29	-14.17269	-26.9298	0.000682252
2.008075	0.001596481	33.00026	314.1786	1452.037	-14.56136	-6.027208	0.001956218
2.008228	0.006566947	32.01455	314.1765	-6476.341	-14.35237	12.30584	0.003504395
2.008372	0.0110347	30.01215	314.1745	-13956.75	-13.64231	29.8662	0.004761133
2.008532	0.01558877	26.63162	314.1725	-21130.67	-12.44142	46.17777	0.006232028
2.008707	0.01983272	21.72185	314.1706	-28139.43	-10.61003	62.27296	0.007485592
2.008895	0.02333592	15.26507	314.1691	-34325.95	-8.119033	76.64764	0.008376127

Sample Data

Peak Engine Torque: 10 ft-lb
Cycle-average Engine Speed: 6000 rpm
8-Inch Outside Diameter Speckhart Absorber

All Data Given
at Steady-state

TIME	PHI	PHI-DOT	THETA-DOT	PHI-DDOT	W-DOT	MO	MU
1.002168	0.007479989	-6.417176	628.3269	-48575.09	2.798982	111.3036	0.002268163
1.002247	0.006835353	-9.974321	628.3273	-45445.11	4.460296	104.9457	0.00197129
1.002331	0.005844746	-13.37371	628.3278	-40287.98	6.046972	94.18077	0.001546968
1.002422	0.004489274	-16.35151	628.3284	-32865.1	7.470359	78.36739	0.001000852
1.00252	0.00276362	-18.61384	628.3293	-23095.4	8.610273	57.2904	0.000335693
1.002613	0.000976725	-19.71635	628.3301	-11905.67	9.27408	32.0148	0.000245712
1.002689	-0.000524133	-19.82561	628.3309	-1445.9	9.424581	7.344623	0.000627349
1.002765	-0.002008685	-19.2179	628.3316	8027.792	9.202167	-14.16798	0.001094316
1.002837	-0.003354242	-17.99338	628.3322	17001.73	8.661258	-34.9206	0.001478916
1.002917	-0.004722881	-15.93558	628.3328	25637.58	7.781873	-54.40972	0.001920595
1.003005	-0.005991614	-12.96442	628.3334	34044.84	6.485117	-73.78979	0.00228997
1.003099	-0.007035854	-9.063102	628.3338	41438.93	4.751825	-91.29168	0.00254687
1.003195	-0.00769088	-4.604231	628.3341	46854.36	2.672433	-104.8003	0.002630911
1.003283	-0.007905548	-0.2159662	628.3342	49575.57	0.5045232	-112.2873	0.002565313
1.003352	-0.007804039	3.181508	628.334	49810.82	-1.370118	-113.6363	0.002447709
1.003421	-0.007464206	6.550261	628.3339	48420.64	-2.977795	-111.1866	0.002265479
1.003497	-0.006836417	9.981657	628.3335	45385.7	-4.572025	-105.1631	0.001973694
1.00358	-0.005867896	13.3186	628.333	40357.81	-6.123727	-94.74719	0.001557105
1.00367	-0.0045275	16.29237	628.3323	33058.99	-7.540822	-79.21676	0.001013937
1.003767	-0.002831236	18.55628	628.3315	23428.73	-8.657843	-58.27613	0.000365309
1.00386	-0.001046335	19.70019	628.3306	12342.96	-9.307706	-33.12851	0.000221932
1.003936	0.000465722	19.8412	628.3299	1852.273	-9.429949	-8.243365	0.000609312
1.004012	0.001964398	19.25334	628.3292	-7702.965	-9.181204	13.62338	0.001079434
1.004084	0.003306385	18.05616	628.3286	-16709.64	-8.612372	34.64134	0.001455935
1.004164	0.004675694	16.03094	628.3279	-25335.72	-7.728527	54.18895	0.001898202
1.004252	0.005952559	13.08693	628.3274	-33771.2	-6.433774	73.62705	0.002272699

Sample Data

Peak Engine Torque: 10 ft-lb
Cycle-average Engine Speed: 9000 rpm
8-Inch Outside Diameter Speckhart Absorber

All Data Given
at Steady-state

TIME	PHI	PHI-DOT	THETA-DOT	PHI-DDOT	W-DOT	MO	MU
0.6680756	0.003662343	-3.398542	942.4844	-53018.59	3.089866	121.1061	0.001132173
0.6681255	0.003429049	-5.922773	942.4847	-50651.98	4.481004	116.5368	0.001016532
0.6681789	0.003045655	-8.389802	942.485	-46282.86	5.78706	107.5699	0.000846783
0.6682369	0.002490664	-10.68185	942.4854	-39618.2	6.95203	93.56407	0.000615374
0.6682995	0.001759187	-12.58338	942.4858	-30451.56	7.87493	73.92661	0.000326771
0.6683635	0.000911409	-13.80515	942.4863	-19153.94	8.404552	49.02164	2.19225E-05
0.6684229	7.40786E-05	-14.2255	942.4868	-7080.427	8.469525	21.46841	0.000238473
0.6684691	-0.000579721	-14.06068	942.4872	3578.985	8.160604	-4.058043	0.000386639
0.6685158	-0.001224514	-13.46095	942.4875	12848.83	7.621397	-25.13969	0.000589031
0.6685662	-0.0018769	-12.34753	942.4879	22123.27	6.80671	-46.11249	0.000798768
0.6686218	-0.002517536	-10.60476	942.4882	31391.99	5.657769	-67.2224	0.000997757
0.6686823	-0.003087667	-8.187898	942.4885	40092.11	4.137571	-87.47063	0.00115493
0.6687469	-0.003520601	-5.135389	942.4886	47321.05	2.277435	-104.8593	0.001246861
0.6688088	-0.003739992	-1.930038	942.4886	51967	0.2653893	-116.8414	0.001250193
0.6688596	-0.003769007	0.7918888	942.4885	53632.95	-1.543096	-121.7909	0.001204779
0.6689106	-0.003659514	3.492015	942.4884	53065.21	-3.120485	-121.4157	0.001126752
0.6689581	-0.003435953	5.895345	942.4882	50660.94	-4.536562	-116.6537	0.001021814
0.6690115	-0.003053506	8.37009	942.4879	46389.66	-5.824851	-108.0455	0.00084836
0.6690695	-0.002499243	10.66981	942.4875	39736.81	-6.998127	-94.07763	0.000617212
0.6691324	-0.001764705	12.5864	942.487	30555.12	-7.916449	-74.39307	0.000326757
0.6691963	-0.000916816	13.81286	942.4865	19232.51	-8.435837	-49.31846	2.35569E-05
0.6692559	-7.83082E-05	14.23759	942.486	7149.365	-8.471964	-21.64396	0.00023694
0.669302	0.000577137	14.07473	942.4857	-3530.779	-8.141536	4.012215	0.000385428
0.6693487	0.001221251	13.47824	942.4853	-12807.46	-7.585848	25.20342	0.000586454
0.6693991	0.001875796	12.36414	942.4849	-22093.21	-6.756106	46.24457	0.000797438
0.6694547	0.002516491	10.62478	942.4846	-31376.96	-5.593322	67.43522	0.000995697

Sample Data

Peak Engine Torque: 150 ft-lb
Cycle-average Engine Speed: 3000 rpm
8-Inch Outside Diameter Speckhart Absorber

All Data Given
at Steady-state

TIME	PHI	PHI-DOT	THETA-DOT	PHI-DDOT	W-DOT	MO	MU
2.005146	0.2458951	314.2868	314.038	-338025	204.0601	859.8307	0.09039046
2.00533	0.2967457	234.7997	314.0976	-432025.9	323.8938	1026.418	0.1045885
2.005532	0.3340665	134.3916	314.1815	-500505.3	418.5087	1100.526	0.1174799
2.005717	0.3497933	34.28929	314.2719	-540340.9	487.6591	1124.456	0.1209242
2.005865	0.3488589	-46.90829	314.3497	-550331.2	527.3123	1111.226	0.1188
2.006012	0.3360488	-126.4193	314.4302	-540108.2	547.0771	1073.296	0.1124066
2.00616	0.311803	-201.7844	314.5115	-512202.6	552.0068	1017.722	0.1010714
2.006324	0.2722904	-277.8513	314.6	-464102.2	540.0844	940.4469	0.08213933
2.006504	0.2159027	-347.762	314.6905	-390320.7	505.029	821.6429	0.05654526
2.006697	0.1427802	-403.5275	314.7755	-288685.1	439.9939	643.643	0.02567053
2.006886	0.0630509	-434.9314	314.8407	-166367.9	345.6627	402.4605	0.003284759
2.007042	-0.005389885	-442.1715	314.8782	-46631.73	241.1896	142.9612	0.02230088
2.007178	-0.06520893	-434.431	314.8976	56934.89	143.0946	-80.03845	0.03958167
2.007315	-0.1234525	-413.6284	314.9041	152042.2	47.47441	-275.0777	0.05896335
2.007469	-0.1842246	-375.6897	314.8958	247576.3	-54.4188	-460.2462	0.08096787
2.007638	-0.2432411	-317.6448	314.8682	342947.1	-163.4303	-641.2413	0.1014122
2.007822	-0.2945685	-238.9061	314.8181	429737.2	-273.2508	-808.9294	0.1172771
2.00802	-0.3323731	-140.1172	314.7432	498989.3	-377.9421	-960.2462	0.1255935
2.008207	-0.3492083	-39.60421	314.6564	540033.8	-466.0338	-1085.541	0.1232184
2.008355	-0.3490419	41.84267	314.5787	551122.8	-525.887	-1160.062	0.1161668
2.008505	-0.3366819	122.8041	314.4944	541543.8	-563.7562	-1203.815	0.1054608
2.008652	-0.3129553	198.4141	314.4084	513945.2	-584.1982	-1211.482	0.09157509
2.008817	-0.2737241	275.2268	314.3123	466144.3	-583.8347	-1175.646	0.07190498
2.008995	-0.2182408	345.0801	314.2138	392952.8	-554.1916	-1057.67	0.0486752
2.00919	-0.1452607	401.7308	314.1197	292095.3	-485.3877	-830.2672	0.02197023
2.00938	-0.06548583	433.9381	314.0483	169958.4	-376.877	-497.1082	0.001937638
2.009536	0.003179927	441.7788	314.0088	50253.12	-253.4906	-145.3863	0.01751087
2.009671	0.0626546	434.6248	313.9901	-52913.45	-138.2745	157.4014	0.03141177

Sample Data

Peak Engine Torque: 150 ft-lb
Cycle-average Engine Speed: 6000 rpm
8-Inch Outside Diameter Speckhart Absorber

All Data Given
at Steady-state

TIME	PHI	PHI-DOT	THETA-DOT	PHI-DDOT	W-DOT	MO	MU
1.00233	0.1740501	560.0941	628.0945	-940106.4	316.1314	2360.945	0.06588352
1.002419	0.2190583	449.2074	628.141	-1251106	525.4401	3019.399	0.07879387
1.002515	0.2554412	304.8481	628.2078	-1506769	697.3107	3455.385	0.09005545
1.002611	0.2770772	143.0834	628.287	-1686468	825.8654	3698.577	0.09533565
1.002699	0.2828495	-13.16788	628.367	-1768929	905.5016	3763.329	0.09476322
1.002769	0.2776851	-135.4799	628.4323	-1766741	942.7793	3698.079	0.09134312
1.002839	0.2639236	-255.3674	628.4992	-1708946	953.1701	3550.251	0.08478082
1.002917	0.2390799	-379.3692	628.5725	-1591564	940.4523	3323.604	0.07301793
1.003002	0.2015461	-498.3663	628.6487	-1399340	896.2673	2980.024	0.05602482
1.003095	0.1504007	-602.0111	628.7234	-1122595	809.3126	2480.808	0.03400633
1.003193	0.08694001	-676.8636	628.7894	-760213.6	669.64	1792.336	0.008504678
1.003285	0.02317885	-709.1296	628.8339	-353109.4	488.0268	947.7062	0.01274021
1.003358	-0.02866431	-707.8516	628.8562	17539.77	305.4657	128.374	0.02600106
1.003431	-0.07984493	-682.4039	628.8659	347153.9	131.8707	-559.2692	0.04296073
1.003505	-0.1282797	-633.6736	628.8627	664957.8	-44.81179	-1220.725	0.05846621
1.003586	-0.1767178	-554.7581	628.8444	973251	-226.2127	-1842.512	0.07497019
1.003675	-0.2211144	-442.6675	628.8078	1267000	-412.9852	-2447.646	0.08872117
1.003771	-0.2568117	-297.1497	628.7507	1518807	-596.0574	-3006.991	0.09754612
1.003867	-0.2776232	-135.2505	628.678	1693819	-760.4708	-3479.842	0.09873348
1.003946	-0.2828092	4.821166	628.608	1769872	-884.1486	-3782.688	0.09448576
1.004014	-0.2783359	125.6989	628.5421	1769782	-965.0102	-3924.419	0.08870269
1.004084	-0.2653506	245.3752	628.4712	1716385	-1016.541	-3967.746	0.08017604
1.004162	-0.2414614	369.4512	628.3907	1604085	-1040.021	-3896.703	0.06744153
1.004247	-0.2046988	489.9965	628.304	1417133	-1020.982	-3631.948	0.05072701
1.004339	-0.1547391	594.8665	628.218	1146276	-939.8002	-3092.495	0.03103511
1.004438	-0.09161499	672.8145	628.1411	788936.9	-779.773	-2230.701	0.008705635
1.00453	-0.02769198	707.9814	628.0902	382466.2	-553.3807	-1129.122	0.009466087
1.004604	0.02479824	708.6655	628.0666	9270.614	-319.9438	-75.67302	0.0209771

Sample Data

Peak Engine Torque: 150 ft-lb
Cycle-average Engine Speed: 9000 rpm
8-Inch Outside Diameter Speckhart Absorber

All Data Given
at Steady-state

TIME	PHI	PHI-DOT	THETA-DOT	PHI-DDOT	W-DOT	MO	MU
0.6681328	0.04778066	-85.04594	942.5425	-707872.1	45.62689	1613.236	0.01414405
0.6681875	0.04215621	-120.1012	942.5462	-642705.6	67.93721	1474.731	0.01171838
0.6682459	0.03418637	-151.9124	942.5514	-546164.8	88.95358	1270.972	0.008426401
0.6683089	0.02374784	-177.9966	942.5582	-415116.3	107.4897	994.1436	0.004286376
0.6683725	0.01185264	-194.2047	942.5659	-255413.3	121.5488	648.2012	1.57798E-05
0.6684316	0.000174229	-199.3141	942.5735	-86622.72	128.8281	270.9932	0.003642814
0.6684769	-0.008813927	-196.5534	942.5794	61015.57	129.7542	-77.05016	0.005652857
0.6685227	-0.0176476	-187.939	942.5852	188175.8	126.3665	-360.4148	0.008449262
0.6685734	-0.02680372	-171.89	942.5912	316805.1	118.6434	-644.5925	0.01148843
0.6686293	-0.03575156	-146.9675	942.597	446538.6	105.1601	-937.2851	0.0142654
0.6686895	-0.04360406	-112.9141	942.6022	567150	85.22888	-1219.177	0.0163803
0.6687546	-0.0495694	-69.67219	942.606	666775.6	58.51841	-1463.799	0.01760449
0.6688164	-0.05249706	-24.6718	942.6077	730025.3	27.46109	-1636.013	0.0175374
0.6688667	-0.05278954	13.08138	942.6076	751476.7	-1.826056	-1709.011	0.01682928
0.6689172	-0.05117784	50.52608	942.6062	742240.2	-28.30567	-1709.065	0.01567663
0.6689652	-0.04793798	84.37007	942.6036	707447.4	-53.13319	-1647.116	0.01412353
0.6690187	-0.04248128	118.8905	942.5995	646218.7	-76.52088	-1528.498	0.01164824
0.6690776	-0.03449579	151.262	942.5938	550960.3	-98.58298	-1330.547	0.008305341
0.6691402	-0.02415757	177.5161	942.5864	420393.5	-116.58	-1045.012	0.004323504
0.6692038	-0.01226902	194.122	942.5783	261435.5	-127.8677	-683.6033	0.00014883
0.6692631	-0.000555166	199.5838	942.5705	92363.4	-131.2436	-284.8897	0.003413823
0.6693087	0.008510075	197.0262	942.5647	-56154.64	-128.3867	81.41876	0.005397291
0.6693549	0.01744023	188.5067	942.5591	-184601.8	-121.8126	382.4687	0.008150912
0.6694053	0.02657914	172.6998	942.5535	-313796.3	-111.2273	680.7808	0.01108567
0.6694608	0.03551582	148.1388	942.5481	-443312.2	-96.02286	979.0389	0.01384054
0.669521	0.04345434	114.1951	942.5435	-564485.4	-75.82998	1258.576	0.0160511
0.6695861	0.04951026	71.0127	942.5402	-665321.4	-50.81385	1492.258	0.01740832

APPENDIX J

STRENGTH ANALYSIS

Two types of stresses on the Speckhart absorber were considered in this thesis: bending and contact (Hertzian) stresses. Each of these is treated separately in this section. Although other stresses, such as those resulting from press-fitting the absorber onto the crankshaft, are not included here, it should not be assumed that they are unimportant. The bending and contact stresses only are taken into account because they significantly affect the dimensions of the absorber, thereby causing a significant on the performance of it. Also, the bending stress provides a mode of catastrophic failure for the absorber (i.e. it flys apart), while excessive contact stresses render the device ineffective and permanently damage it. Therefore, it is critical that these stresses be kept within the limitations of the materials used.

Bending Stress

A sketch of the Speckhart absorber is shown in Fig. J1. Note the dotted-line shapes

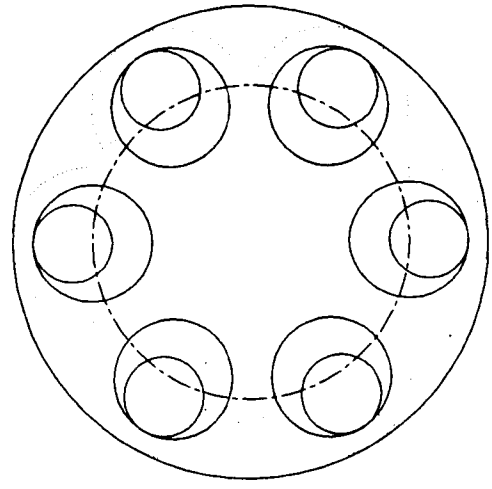

Figure J1 Sketch of the Speckhart Absorber (with Half-rings shown)

around the outer edge of each cavity. These shapes, hereafter called *half-rings*, have 180° of arc length and are as wide as the outer margin x_o, which is the distance between the outer edge of the cavity and the outer edge of the absorber. These half-rings are part of the absorber body which must withstand the stress caused by the centrifugal force of the pendular mass against the outer edge of the cavity. Fig. J2 shows a single cavity and half-ring with the centrifugal force of the pendular mass (F_c) acting on the half-ring, along with two reaction forces to balance F_c. This figure represents a simple curved-beam problem, where the thickness of the beam is equivalent to the length of the pendular mass. The bending strength of this half-ring is considered a conservative estimate of the bending strength of the absorber body.

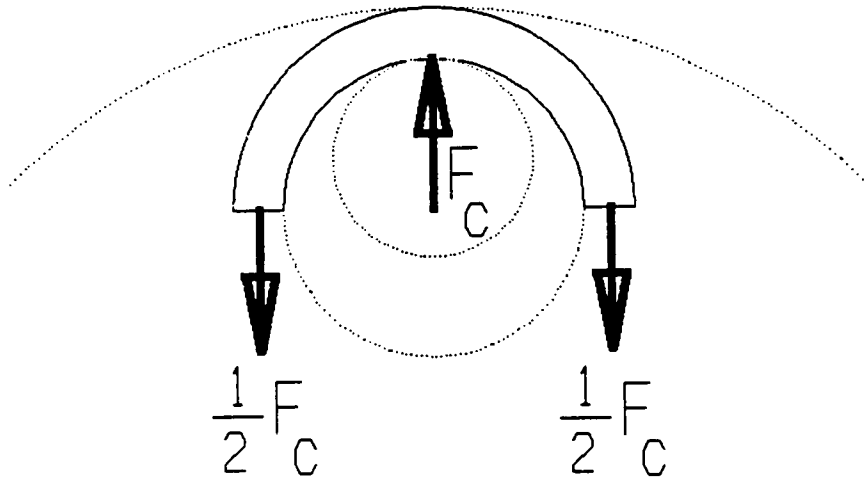

Figure J2 Sketch of Single Half-ring with Simplified Centrifugal Loading

The maximum bending stress on the inner edge of the half-ring is given by

$$\begin{aligned}\sigma_{b,i} &= \frac{M_b c_i}{A_b e_b r_i} \\ &= \frac{\left[\left(\frac{1}{2}F_c\right)\left(r_1+\frac{1}{2}x_o\right)\right](r_n-r_1)}{(x_o l)\left(r_1+\frac{1}{2}x_o-r_n\right)r_1} \\ &= \frac{\frac{1}{2}m_w(r_3+r_2)\omega^2\left(r_1+\frac{1}{2}x_o\right)(r_n-r_1)}{x_o l\left(r_1+\frac{1}{2}x_o-r_n\right)r_1}\end{aligned} \qquad \textbf{(J1)}$$

where

$$r_n = \frac{x_o}{\ln\left(\frac{r_1+x_o}{r_1}\right)}$$

The maximum bending stress on the outer edge of the half-ring is given by

$$\begin{aligned}\sigma_{b,o} &= \frac{M_b c_o}{A_b e_b r_o} \\ &= \frac{\frac{1}{2}m_w(r_3+r_2)\omega^2\left(r_1+\frac{1}{2}x_o\right)(r_1+x_o-r_n)}{(x_o l)\left(r_1+\frac{1}{2}x_o-r_n\right)(r_1+x_o)}\end{aligned} \qquad \textbf{(J2)}$$

Note that the magnitude of $\sigma_{b,i}$ is greater than that of $\sigma_{b,o}$, as demonstrated by the following ratio

where r_n is greater than r_1. Therefore, $\sigma_{b,i}$ is the overall maximum bending stress.

$$\frac{\sigma_{b,i}}{\sigma_{b,o}} = \frac{\left(\frac{r_n}{r_1}\right) - 1}{1 - \left(\frac{r_n}{r_1 + x_o}\right)}$$

Contact Stress

The contact stress is given by

$$\sigma_H = \frac{2F_c}{\pi b_H l} = \frac{2m_w(r_3 + r_2)\omega^2}{\pi b_H l} \qquad \textbf{(J3)}$$

where

$$b_H = \sqrt{\left(\frac{2m_w(r_3 + r_2)\omega^2}{\pi l}\right)\left(\frac{\frac{(1-\nu_1^2)}{E_1} + \frac{(1-\nu_2^2)}{E_2}}{\frac{1}{d_1} + \frac{1}{d_2}}\right)}$$

APPENDIX K

```
REM  MAXABS.BAS
REM  Jeffrey B. Sharpe
REM  15 February 1993

REM     **** Declare functions ****

DECLARE FUNCTION ASIN! (SINEX!)
REM     ****************************


REM  **** Dimension Arrays ****

  DIM E(5), NU(5), RHO(5), SY(5)
REM  ****************************


REM  **** Establish Constants ****

  PI = 3.14159265358#
REM  ****************************


REM  **** Materials Data ****

  E(1) = 10600000: E(2) = 15000000: E(3) = E(2): E(4) = E(2): E(5) = 30000000
  NU(1) = .334: NU(2) = .34: NU(3) = NU(2): NU(4) = NU(2): NU(5) = .295
  RHO(1) = .0002901: RHO(2) = .000712829#: RHO(3) = .000710492#: RHO(4) = .000706493#: RHO(5) = .0007409
  SY(1) = 60000: SY(2) = 20000: SY(3) = 35000: SY(4) = 40000: SY(5) = SY(4)
REM  ************************


REM  **** Introduction Screen ****

CLS : SCREEN 9: COLOR 1, 7
LOCATE 3, 37: PRINT "MAXABS"
LOCATE 4, 30: PRINT "by Jeffrey B. Sharpe"
LOCATE 5, 32: PRINT "15 February 1993"
LOCATE 8
PRINT "This program finds the optimum dimensions of Dr. Frank H. Speckhart's"
PRINT "centrifugal pendulum absorber for a given set of geometrical parameters,"
PRINT "materials selection and maximum engine speed."
LOCATE 12
PRINT "The engine for this absorber is assumed to have four power pulses per"
PRINT "revolution -- as would an eight-cylinder, four cycle engine."
LOCATE 15
PRINT "The thickness of the rollers in the absorber is assumed to be one inch."
LOCATE 18
PRINT "This program will print the optimum configuration of absorber to the screen and"
PRINT "to a printer -- if one is connected to LPT1.  If connected, the printer will"
PRINT "also list the optimum configuration for each of a range of values of the hole-"
PRINT "circle radius.  You will be given an opportunity to omit the listing of these"
PRINT "values after the geometry, materials and operating conditions have been given."
COLOR 6: LOCATE 25, 27: PRINT "PRESS ANY KEY TO CONTINUE"
DO WHILE INKEY$ = ""
LOOP
REM  ****************************
```

```
REM  **** Geometrical Parameters ****

CLS : COLOR 1
LOCATE 2, 25: PRINT "ESTABLISH GEOMETRICAL PARAMETERS"
LOCATE 3, 20: PRINT "(all dimensions should be given in inches)"

LOCATE 8, 10: PRINT "Enter the maximum absorber radius:"
MARK1:
COLOR 4: LOCATE 8, 47: LINE INPUT R$: R = VAL(R$): COLOR 1
IF R < 2 THEN
  LOCATE 8, 47: PRINT "                "
  GOTO MARK1
ELSEIF R > 10 THEN
  LOCATE 8, 47: PRINT "                "
  GOTO MARK1
END IF

LOCATE 10, 10: PRINT "      Enter the shaft-hub radius:"
MARK2:
COLOR 4: LOCATE 10, 47: LINE INPUT RH$: RH = VAL(RH$): COLOR 1
IF RH < .25 THEN
  LOCATE 10, 47: PRINT "                "
  GOTO MARK2
ELSEIF RH > (R - 1) THEN
  LOCATE 10, 47: PRINT "                "
  GOTO MARK2
END IF


LOCATE 12, 10: PRINT "  Enter the minimum outer margin:"
MARK3:
COLOR 4: LOCATE 12, 47: LINE INPUT XO$: XO = VAL(XO$): COLOR 1
IF XO < 0 THEN
  LOCATE 12, 47: PRINT "                "
  GOTO MARK3
ELSEIF XO > (R / 3) THEN
  LOCATE 12, 47: PRINT "                "
  GOTO MARK3
END IF


LOCATE 14, 10: PRINT "  Enter the minimum inner margin:"
MARK4:
COLOR 4: LOCATE 14, 47: LINE INPUT XI$: XI = VAL(XI$): COLOR 1
IF XI < 0 THEN
  LOCATE 14, 47: PRINT "                "
  GOTO MARK4
ELSEIF XI > (R / 3) THEN
  LOCATE 14, 47: PRINT "                "
  GOTO MARK4
END IF

COLOR 6: LOCATE 25, 27: PRINT "PRESS ANY KEY TO CONTINUE"
DO WHILE INKEY$ = ""
LOOP
```

```
REM  *********************************


REM  **** Maximimum Engine Speed ****

CLS : COLOR 1
LOCATE 2, 25: PRINT "ESTABLISH MAXIMUM ENGINE SPEED"
LOCATE 3, 37: PRINT "(in RPM)"

LOCATE 10, 10: PRINT "Enter the maximum engine speed:"
MARK5:
COLOR 4: LOCATE 10, 43: LINE INPUT W$: W = VAL(W$): COLOR 1
IF W < 1000 THEN
  LOCATE 10, 43: PRINT "                "
  GOTO MARK5
ELSEIF W > 20000 THEN
  LOCATE 10, 43: PRINT "                "
  GOTO MARK5
END IF
W = W * 2 * PI / 60        ' remember to convert to rad/s

COLOR 6: LOCATE 25, 27: PRINT "PRESS ANY KEY TO CONTINUE"
DO WHILE INKEY$ = ""
LOOP
REM  *********************************


REM  **** Materials Selection ****

CLS : COLOR 1
LOCATE 2, 31: PRINT "ESTABLISH MATERIALS"
LOCATE 4: PRINT "Choose the number corresponding to the desired material."
GOSUB MATERIALS

LOCATE 6, 25: PRINT "absorber body material:"
MARK6:
COLOR 4: LOCATE 6, 50: ABM = VAL(INPUT$(1))
  IF ABM < 1 THEN
    GOTO MARK6
  ELSEIF ABM > 5 THEN
    GOTO MARK6
  END IF
PRINT ABM: COLOR 1

LOCATE 7, 32: PRINT "roller material:"
MARK7:
COLOR 4: LOCATE 7, 50: ARM = VAL(INPUT$(1))
  IF ARM < 1 THEN
    GOTO MARK7
  ELSEIF ARM > 5 THEN
    GOTO MARK7
  END IF
PRINT ARM: COLOR 1
COLOR 6: LOCATE 25, 27: PRINT "PRESS ANY KEY TO CONTINUE"
DO WHILE INKEY$ = ""
LOOP
```

```
COLOR 1

E1 = E(ABM): NU1 = NU(ABM): RHO1 = RHO(ABM): SY1 = SY(ABM)
E2 = E(ARM): NU2 = NU(ARM): RHO2 = RHO(ARM): SY2 = SY(ARM)


REM   **** Prompt for Printing Options ****

  CLS : LOCATE 11, 7
  PRINT "Press Y to print optimum configurations for each R3 to the printer."
  LOCATE 13, 19
  PRINT "Press any other key to skip this printing."
  TERESA$ = INPUT$(1)
  IF TERESA$ = "y" THEN
    PFLAG$ = "Y"
  ELSEIF TERESA$ = "Y" THEN
    PFLAG$ = "Y"
  ELSE
    PFLAG$ = "N"
  END IF

  IF PFLAG$ = "Y" THEN
    LPRINT "OPTIMUMS"
    LPRINT "LINE 1:  R3, R1, RW, NR, SF"
    LPRINT "LINE 2:  TP, TP2, HS, BS"
    LPRINT : LPRINT
  END IF
REM   ************************************


REM   ******************************************************************
REM   ************************ Main Code ********************************
REM   ******************************************************************

CLS : COLOR 1
LOCATE 2, 29: PRINT "ESTABLISH THE STEP SIZE"
LOCATE 3, 10: PRINT "This program will test each feasible combination of R3 and R1"
LOCATE 4, 9: PRINT "in increments which you specify (must be between 0.0001 and 1)."
LOCATE 10, 17: PRINT "Enter the step size for R3:"
MARK8:
COLOR 4: LOCATE 10, 45: LINE INPUT R3STEP$: R3STEP = VAL(R3STEP$): COLOR 1
IF R3STEP < .0001 THEN
  LOCATE 10, 45: PRINT "                    "
  GOTO MARK8
ELSEIF R3STEP > 1 THEN
  LOCATE 10, 45: PRINT "                    "
  GOTO MARK8
END IF

LOCATE 11, 17: PRINT "Enter the step size for R1:"
MARK9:
COLOR 4: LOCATE 11, 45: LINE INPUT R1STEP$: R1STEP = VAL(R1STEP$): COLOR 1
IF R1STEP < .0001 THEN
  LOCATE 11, 45: PRINT "                    "
  GOTO MARK8
ELSEIF R1STEP > 1 THEN
```

```
  LOCATE 11, 45: PRINT "                    "
  GOTO MARK8
END IF

    OMTP = 0
    COUNTER = 0
    FOR R3 = (RH + .25) TO (R - XO - .25) STEP R3STEP

      R2 = R3 / 24

      MTP = 0
      FOR R1 = .25 TO ((R - XO - RH) / 2) STEP R1STEP
        RW = R1 - R2
        IF RW <= 0 THEN
           GOTO R1LOOP
        ELSEIF R1 > (R - R3 - XO) THEN
           GOTO R1LOOP
        END IF

        MW = RHO2 * PI * (RW ^ 2)     ' remember L=1

        GOSUB STRESS

        IF SF > 1 THEN
          SPSI = (R1 + (XI / 2)) / R3
          IF ABS(SPSI) >= 1 THEN
            GOTO R1LOOP
          END IF
          NR = INT(PI / ASIN(SPSI))
          TP = NR * MW * R2 * (R1 + R3)
          TP2 = NR * MW * R2 * R3     ' remember this is a check

          IF TP > OMTP THEN
            OMR3 = R3: OMR1 = R1: OMRW = RW: OMNR = NR: OMSF = SF: OMTP = TP: OMTP2 = TP2:
OMHS = HS: OMBS = BS
          END IF
          IF TP > MTP THEN
            MR1 = R1: MRW = RW: MNR = NR: MSF = SF: MTP = TP: MTP2 = TP2: MHS = HS: MBS = BS
          END IF
        END IF

R1LOOP:
      NEXT R1

      IF COUNTER >= (R / R3STEP / 20) THEN
        IF PFLAG$ = "Y" THEN
          LPRINT USING "##.####      "; R3; MR1; MRW; MNR; MSF
          LPRINT USING "##.###^^^^  "; MTP; MTP2; MHS; MBS
        END IF
        COUNT = 0
      ELSEIF COUNTER < (R / R3STEP / 20) THEN
        COUNT = COUNTER + 1
      END IF
      COUNTER = COUNT

      PERCOM = (R3 - RH - .25) / (R - XO - RH - .5) * 100
```

```
    COLOR 6: LOCATE 20, 23: PRINT USING "PERCENT COMPLETION:  ###.##"; PERCOM

  NEXT R3

REM  **** Print Final Results to Screen ****

  CLS : COLOR 1: LOCATE 3, 30: PRINT "OPTIMUM CONFIGURATION"
  LOCATE 6, 30: PRINT "R3:"
  LOCATE 7, 30: PRINT "R1:"
  LOCATE 8, 30: PRINT "RW:"
  LOCATE 9, 30: PRINT "NR:"
  LOCATE 10, 30: PRINT "SF:"
  LOCATE 11, 30: PRINT "TP:"
  LOCATE 12, 29: PRINT "TP2:"
  LOCATE 13, 30: PRINT "HS:"
  LOCATE 14, 30: PRINT "BS:"
  LOCATE 15, 31: PRINT "W:"
  LOCATE 16, 30: PRINT "RH:"
  LOCATE 17, 30: PRINT "XI:"
  LOCATE 18, 31: PRINT "R:"
  LOCATE 19, 29: PRINT "NU1:"
  LOCATE 20, 29: PRINT "SY1:"
  LOCATE 21, 29: PRINT "NU2:"
  LOCATE 22, 29: PRINT "SY2:"
  COLOR 4
  LOCATE 6, 35: PRINT USING "##.####"; OMR3: LOCATE 7, 35: PRINT USING "##.####"; OMR1
  LOCATE 8, 35: PRINT USING "##.####"; OMRW: LOCATE 9, 35: PRINT USING "##"; OMNR
  LOCATE 10, 35: PRINT USING "##.###"; OMSF: LOCATE 11, 35: PRINT USING "##.####^^^^"; OMTP
  LOCATE 12, 35: PRINT USING "##.####^^^^"; OMTP2: LOCATE 13, 35: PRINT USING "#####"; OMHS
  LOCATE 14, 35: PRINT USING "#####.###"; OMBS
  LOCATE 15, 35: PRINT W
  LOCATE 16, 35: PRINT RH
  LOCATE 17, 35: PRINT XI
  LOCATE 18, 35: PRINT R
  LOCATE 19, 35: PRINT NU1
  LOCATE 20, 35: PRINT SY1
  LOCATE 21, 35: PRINT NU2
  LOCATE 22, 35: PRINT SY2
  COLOR 1: LOCATE 24, 27: PRINT "PRESS PRINT SCREEN TO PRINT"
  COLOR 6: LOCATE 25, 24: PRINT "PRESS ANY OTHER KEY TO CONTINUE"
  DO WHILE INKEY$ = ""
  LOOP
  COLOR 1
REM  ****************************************


REM  ******************************************************************
END

MATERIALS:
    COLOR 1: LOCATE 10
    PRINT " 1)  aluminum, wrought, 2014-T6"
    PRINT "     yield strength:  60000 psi"
    LOCATE 13
    PRINT " 2)  brass, C36000"
    PRINT "     yield strength:  20000 psi"
```

```
    LOCATE 16
    PRINT " 3)  brass, C62300"
    PRINT "     yield strength:  35000 psi"
    LOCATE 19
    PRINT " 4)  brass, C62400"
    PRINT "     yield strength:  40000 psi"
    LOCATE 22
    PRINT " 5)  steel, SAE 1025 (low carbon)"
    PRINT "     yield strength:  40000 psi"
  RETURN

STRESS:
  OM = R - R1 - R3
  IF OM = 0 THEN
    SF = 0
    GOTO BOTTOM
  END IF
  D1 = (-1) * 2 * R1: D2 = 2 * RW
  F = MW * (R2 + R3) * (W ^ 2)
  B = ((2 * F / PI) * (((1 - (NU1 ^ 2)) / E1) + ((1 - (NU2 ^ 2)) / E2)) / ((1 / D1) + (1 / D2))) ^ .5
  IF B > 0 THEN
     HS = 2 * F / PI / B
  ELSE
     HS = SY1 + 10000
  END IF
  RN = OM / LOG((R1 + OM) / R1)
  DENOM = (OM * R1 * (R1 + (OM / 2) - RN))
  IF DENOM > 0 THEN
     BS = (.5 * F * (R1 + (OM / 2)) * (RN - R1)) / DENOM
  ELSE
     BS = SY1 + 10000
  END IF
  IF BS > HS THEN
    MAX = BS
  ELSE
    MAX = HS
  END IF

  SF1 = SY1 / MAX
  SF2 = SY2 / MAX
  IF SF1 < SF2 THEN
    SF = SF1
  ELSE
    SF = SF2
  END IF
BOTTOM:
  RETURN

FUNCTION ASIN (SINEX)
      DENOMINATOR = ((1 - (SINEX ^ 2)) ^ .5)
      IF DENOMINATOR > 0 THEN
            ASIN = ATN(SINEX / DENOMINATOR)
      ELSE
            ASIN = 10
      END IF
END FUNCTION
```

APPENDIX L

PHASE OF SWING ANGLE STUDY

The effectiveness of an absorber depends upon the inertial mass to oscillate out-of-phase with the driving frequency. In the case of the centrifugal pendulum absorber, the pendular masses must oscillate, at least approximately, out-of-phase with the driving torque for the device to effectively reduce torsional vibrations. Figures L1 - L3 show the relationship between the swing angle, ϕ, of the pendular masses and the timing of the driving torque for three steady-state, torque loading scenarios: within the capability of the absorber; slightly beyond the capability of the absorber; and well beyond the capability of the absorber. The second curve in each of these figures is a simple sinusoid at four times the crankshaft speed and an amplitude sufficient to match that of the primary curve (ϕ). The secondary curve is included only that the figures may better illustrate the trend of the pendular masses to begin oscillating in-phase with the driving torque when the absorber's capability is exceeded. Within the capability of the absorber, the swing angle of the pendular masses remains very nearly out-of-phase with the driving torque (Fig. L1). As the engine torque is increased beyond the capability of the absorber, the pendular masses oscillate more and more in-phase (Figs. L2 and L3). The effect of the pendular masses oscillating in-phase with the driving torque is a magnification of the torsional vibration of the crankshaft.

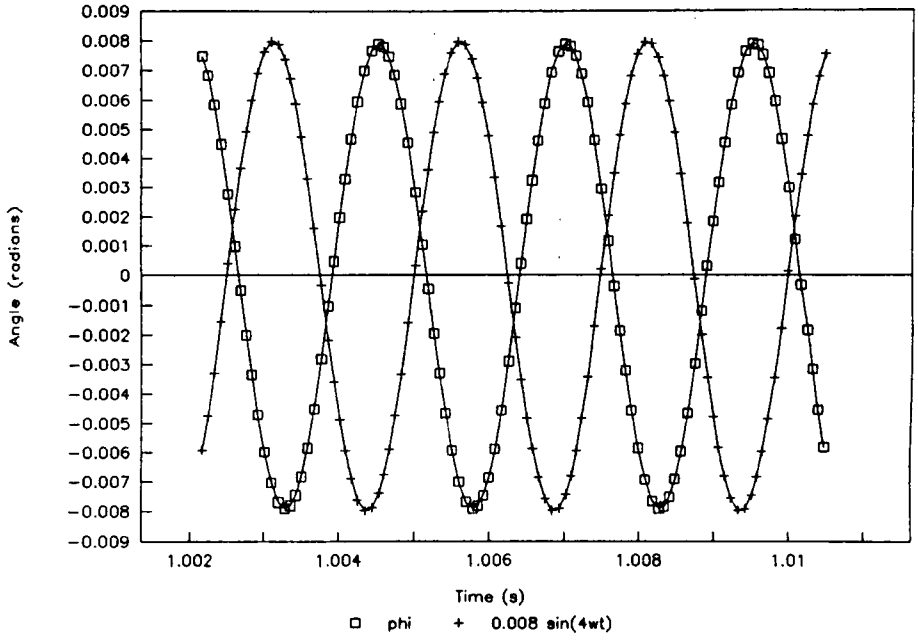

Figure L1 Typical Phase Relationship of Pendular Masses Within Absorber Capability

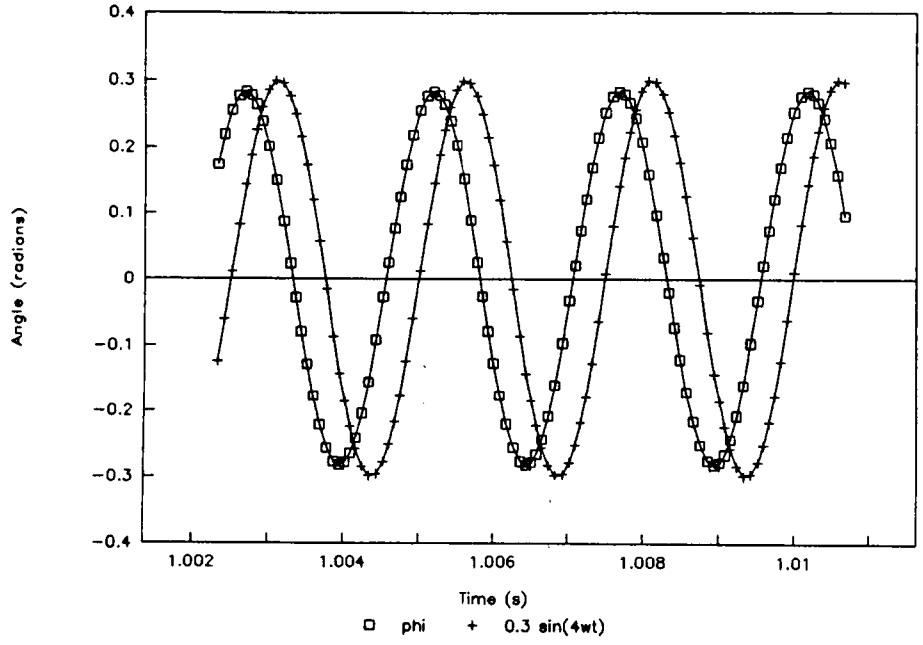

Figure L2 Typical Phase Relationship of Pendular Masses Outside Absorber Capability

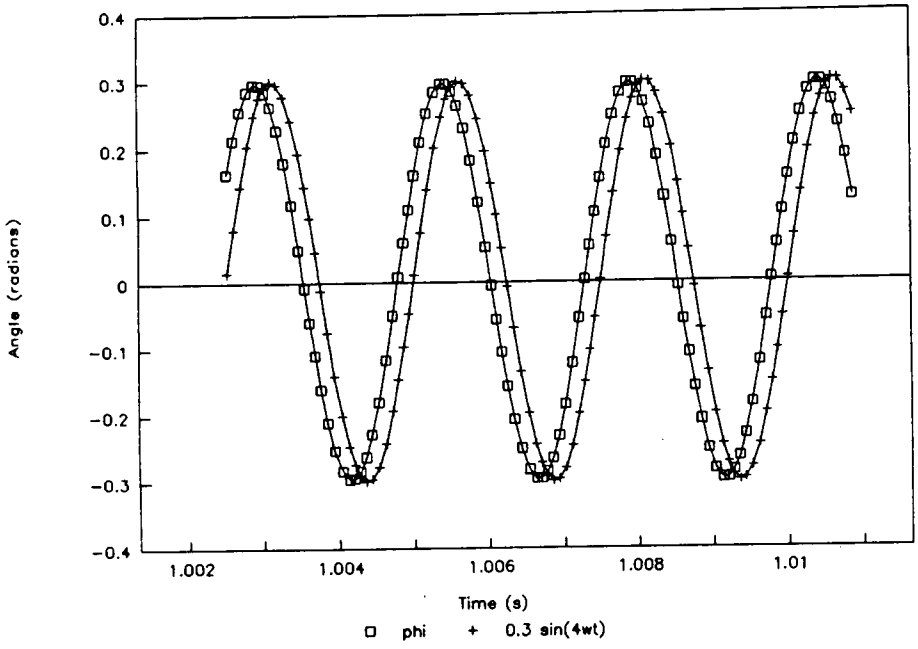

Figure L3 Typical Phase Relationship of Pendular Masses Well-Outside Absorber Capability

APPENDIX M

```
REM     ARK.BAS
REM     Program taken from NUMERICAL RECIPES for BASIC and adapted by Jeffrey B. Sharpe
REM     Date:  15 March 1993


DECLARE SUB DERIVS (X!, Y!(), DYDX!())
DECLARE SUB RK4 (Y!(), DYDX!(), N!, X!, H!, YOUT!(), DUM!)
DECLARE SUB RKQC (Y!(), DYDX!(), N!, X!, HTRY!, EPS!, YSCAL!(), HDID!, HNEXT!, DUM!)
COMMON SHARED A, B, C

OPEN "c:\jbs\thesis\programs\data\ark.prn" FOR OUTPUT AS #1

NVAR = 1
DIM X(NVAR), Y(NVAR), DYDX(NVAR), YSCAL(NVAR)

PI = 3.14159265358#


    A = 10
    B = .3
    C = 628.3185

REM  **** main code ****
    H = .0001
    HMAX = TD / 2
    HMIN = 1E-30
    EPS = .0001
    X = 0
    Y(1) = 0
    DO WHILE (X < .02)
        GOSUB RK
        IF INKEY$ = " " THEN
            EXIT DO
        END IF
    LOOP
    CLOSE #1
    END


REM  **** Runge-Kutta subroutine with stepsize adjustment from: ****
REM  **** NUMERICAL RECIPES Routines and Examples in BASIC ****
RK:
    FOR I = 1 TO NVAR            ' remember the old values of Y()
        YOLD(I) = Y(I)
    NEXT I
    CALL DERIVS(X, Y(), DYDX())
    FOR I = 1 TO NVAR
        YSCAL(I) = ABS(Y(I)) + ABS(H * DYDX(I)) + HMIN
    NEXT I

    CALL RKQC(Y(), DYDX(), NVAR, X, H, EPS, YSCAL(), HDID, HNEXT, DUM)

    IF ABS(HNEXT) < HMIN THEN
        GOSUB ERROR1
    ELSEIF ABS(HNEXT) > HMAX THEN
        GOSUB ERROR2
```

```
    ELSE
        H = HNEXT
    END IF
    WRITE #1, X, Y(1)
RETURN

ERROR1:
RETURN
ERROR2:
RETURN

SUB DERIVS (X, Y(), DYDX())

TERM1 = EXP(B * X)
TERM2 = SIN(4 * C * X)
TERM3 = COS(4 * C * X)
DYDX(1) = A * ((B * TERM1 * TERM2) + (4 * C * TERM1 * TERM3))

END SUB

SUB RK4 (Y(), DYDX(), N, X, H, YOUT(), DUM)

DIM YT(N), DYT(N), DYM(N)
HH = H * .5
H6 = H / 6!
XH = X + HH
FOR I = 1 TO N
    YT(I) = Y(I) + HH * DYDX(I)
NEXT I
CALL DERIVS(XH, YT(), DYT())
FOR I = 1 TO N
    YT(I) = Y(I) + HH * DYT(I)
NEXT I
CALL DERIVS(XH, YT(), DYM())
FOR I = 1 TO N
    YT(I) = Y(I) + H * DYM(I)
    DYM(I) = DYT(I) + DYM(I)
NEXT I
CALL DERIVS(X + H, YT(), DYT())
FOR I = 1 TO N
    YOUT(I) = Y(I) + H6 * (DYDX(I) + DYT(I) + 2! * DYM(I))
NEXT I
ERASE DYM, DYT, YT

END SUB

SUB RKQC (Y(), DYDX(), N, X, HTRY, EPS, YSCAL(), HDID, HNEXT, DUM)

FCOR = .0666666667#
ONE = 1!
SAFETY = .9
ERRCON = .0006
DIM YTEMP(N), YSAV(N), DYSAV(N)
PGROW = -.2
PSHRNK = -.25
XSAV = X
```

```
FOR I = 1 TO N
   YSAV(I) = Y(I)
   DYSAV(I) = DYDX(I)
NEXT I
H = HTRY
DO
   HH = .5 * H
   CALL RK4(YSAV(), DYSAV(), N, XSAV, HH, YTEMP(), DUM)
   X = XSAV + HH
   CALL DERIVS(X, YTEMP(), DYDX())
   CALL RK4(YTEMP(), DYDX(), N, X, HH, Y(), DUM)
   X = XSAV + H
   IF X = XSAV THEN PRINT "Stepsize not significant in RKQC.": EXIT SUB
   CALL RK4(YSAV(), DYSAV(), N, XSAV, H, YTEMP(), DUM)
   ERRMAX = 0!
   FOR I = 1 TO N
      YTEMP(I) = Y(I) - YTEMP(I)
      IF ABS(YTEMP(I) / YSCAL(I)) > ERRMAX THEN ERRMAX = ABS(YTEMP(I) / YSCAL(I))
   NEXT I
   ERRMAX = ERRMAX / EPS
   IF ERRMAX > ONE THEN
      H = SAFETY * H * (ERRMAX ^ PSHRNK)
      FLAG = 1
   ELSE
      HDID = H
      IF ERRMAX > ERRCON THEN
         HNEXT = SAFETY * H * (ERRMAX ^ PGROW)
      ELSE
         HNEXT = 4! * H
      END IF
      FLAG = 0
   END IF
LOOP WHILE FLAG = 1
FOR I = 1 TO N
   Y(I) = Y(I) + YTEMP(I) * FCOR
NEXT I
ERASE DYSAV, YSAV, YTEMP

END SUB
```

Accuracy Test

The accuracy of the adaptive-step Runge-Kutta (ARK) program was tested using the following equation:

$$y = Ae^{Bt}\sin(4\omega t)$$

where A = 10, B = 0.3 and ω = 628.3185. The first derivative of this equation, which the ARK program was used to solve, is given by

$$\dot{y} = A\left([Be^{Bt}\sin(4\omega t)] + [4\omega e^{Bt}\cos(4\omega t)]\right)$$

The solution obtained by the ARK program was compared to the direct solution of the function. The results are given in the table below

time	ARK	exact	magn. diff.	time	ARK	exact	magn. diff.
.0001	2.486973	2.48697336	3.6072E-07	.0019	-9.985968	-9.9859594	8.6191E-06
.0002	4.817826	4.81782559	4.1347E-07	.002	-9.516287	-9.5162817	5.2576E-06
.0003	6.846087	6.84608691	8.9326E-08	.0021	-8.448619	-8.4486151	3.9469E-06
.0004	8.444293	8.44429225	7.5406E-07	.0022	-6.850013	-6.8499925	2.0467E-05
.0005	9.511992	9.51199166	3.3515E-07	.0023	-4.820888	-4.8208645	2.3533E-05
.0006	9.982065	9.98206385	1.1522E-06	.0024	-2.488718	-2.4886929	2.5058E-05
.0007	9.824937	9.82493569	1.3117E-06	.0025	-2.808E-05	-3.074E-06	2.5002E-05
.0008	9.050444	9.05044279	1.2112E-06	.0026	2.488812	2.48883631	2.4313E-05
.0009	7.707214	7.7072138	2.0053E-07	.0027	4.821414	4.82143762	2.3617E-05
.001	5.879618	5.87961917	1.1713E-06	.0028	6.8512	6.85122116	2.1161E-05
.0011	3.682463	3.6824618	1.2046E-06	.0029	8.450606	8.45062619	2.0193E-05
.0012	1.253786	1.25378508	9.2013E-07	.003	9.519109	9.51912738	1.8384E-05
.0013	-1.253818	-1.2538196	1.6452E-06	.0031	9.989535	9.98955301	1.8011E-05
.0014	-3.682789	-3.6827904	1.3746E-06	.0032	9.832291	9.83230773	1.673E-05
.0015	-5.880497	-5.8804967	3.3997E-07	.0033	9.057218	9.05723448	1.6476E-05
.0016	-7.708832	-7.7088305	1.4746E-06	.0034	7.712982	7.71299834	1.6338E-05
.0017	-9.052889	-9.0528854	3.5703E-06	.0035	5.884014	5.88403099	1.6992E-05
.0018	-9.828184	-9.8281779	6.1238E-06	.0036	3.68521	3.68522754	1.7537E-05

```
REM  ARKSSCY.BAS
REM  Jeffrey B. Sharpe
REM  18 March 1993

REM     This program receives user specifications for the dimensions of the Speckhart
REM     absorber, the engine parameters and the initial conditions.  It then simulates
REM     the performance of the engine with the absorber for 100 cycles (steady-state).
REM     The final results are saved to an output file which the user designates.


DECLARE SUB DERIVS (X!, Y!(), DYDX!())
DECLARE SUB RK4 (Y!(), DYDX!(), N!, X!, H!, YOUT!(), DUM!)
DECLARE SUB RKQC (Y!(), DYDX!(), N!, X!, HTRY!, EPS!, YSCAL!(), HDID!, HNEXT!, DUM!)
COMMON SHARED R3, R2, R1, RW, CC, L, NR, RHO, CF, CE, MW, IW, IM, W, PET

NVAR = 4
DIM X(NVAR), Y(NVAR), DYDX(NVAR), YSCAL(NVAR), YSTART(NVAR), YOLD(NVAR)
DIM YMIN(NVAR), YMAX(NVAR)

PI = 3.14159265358#

REM  **** user input ****
    CLS : SCREEN 9: COLOR , 0
    GOSUB NAMEFILE
    GOSUB ABSORBER
    GOSUB ENGINE
    GOSUB INITIAL
    CLS

REM  **** main code ****
    GOSUB ADATA
TERESA:
    H = TD / 100
    HMAX = TD / 2
    HMIN = 1E-30
    EPS = .00001
    X = X1
    FOR I = 1 TO NVAR
        Y(I) = YSTART(I)
    NEXT I

    GOSUB ENDRUN
    GOSUB RTEXT
    HEYYOU = 0
    ENDT = (100 * TD) + X1
    DO WHILE X < ENDT
        GOSUB DELW
        IF HEYYOU = 4 THEN
            EXIT DO
        END IF
    LOOP
    EDELW = PET / 2 / W / (IM + (NR * IW))
    SRR = DLNEW / EDELW
    GOSUB SAVING
    GOSUB CHOOSER
    IF NUMBER = 4 THEN
```

```
      GOTO TERESA
    END IF
    CLOSE #1
    END

REM  **** this is the subroutine to find the change in engine speed ****
DELW:
      DLOLD = DLNEW                    ' set current value to old
      PMAX = PHIMAX
      PHIMAX = 0
    DO WHILE X < ENDT
      DO WHILE (Y(3) >= YOLD(3))       ' for values increasing
            IF HEYYOU = 4 THEN
               EXIT DO
            END IF
            GOSUB RK
            IF (Y(3) > YOLD(3)) THEN
                  TMAX = X
                  FOR JBS = 1 TO NVAR
                        YMAX(JBS) = Y(JBS)
                  NEXT JBS
            END IF
            IF Y(1) > PHIMAX THEN
               PHIMAX = Y(1)
            END IF
            IF INKEY$ = " " THEN
                  HEYYOU = 4
                  EXIT DO
            END IF
       LOOP
       DO WHILE (Y(3) <= YOLD(3))      ' for values decreasing
            IF HEYYOU = 4 THEN
               EXIT DO
            END IF
            IF (Y(3) < YOLD(3)) THEN
                  TMIN = X
                  FOR JBS = 1 TO NVAR
                        YMIN(JBS) = Y(JBS)
                  NEXT JBS
            END IF
            IF Y(1) > PHIMAX THEN
               PHIMAX = Y(1)
            END IF
            IF INKEY$ = " " THEN
                  HEYYOU = 4
                  EXIT DO
            END IF

            GOSUB RK
       LOOP
       IF HEYYOU <> 4 THEN
          DLNEW = YMAX(3) - YMIN(3)          ' we have a del w
       END IF
       COLOR 4
       LOCATE 11, 24: PRINT USING "##.########"; DLNEW
       LOCATE 18, 24: PRINT USING "##.########"; PHIMAX
```

```
    COLOR 7
  IF HEYYOU = 4 THEN
     EXIT DO
  END IF
  LOOP
RETURN

REM  **** Runge-Kutta subroutine with stepsize adjustment from: ****
REM  **** NUMERICAL RECIPES Routines and Examples in BASIC ****
RK:
   FOR I = 1 TO NVAR              ' remember the old values of Y()
      YOLD(I) = Y(I)
   NEXT I
   CALL DERIVS(X, Y(), DYDX())
   FOR I = 1 TO NVAR
      YSCAL(I) = ABS(Y(I)) + ABS(H * DYDX(I)) + HMIN
   NEXT I

   CALL RKQC(Y(), DYDX(), NVAR, X, H, EPS, YSCAL(), HDID, HNEXT, DUM)

   IF ABS(HNEXT) < HMIN THEN
      GOSUB ERROR1
   ELSEIF ABS(HNEXT) > HMAX THEN
      GOSUB ERROR2
   ELSE
      H = HNEXT
   END IF

   COLOR 4
   LOCATE 4, 24: PRINT USING "###.########"; X
   COLOR 7
RETURN

REM  **** name the data file and specify drive path ****
NAMEFILE:
   CLS : COLOR 7: LOCATE 4, 32: PRINT "Specify the Output File"
   LOCATE 7, 10: PRINT "Enter the drive (A, B, C, etc ....):": LOCATE 7, 48: DRIVE$ = INPUT$(1)
   LOCATE 7, 48: PRINT DRIVE$
   LOCATE 10, 10: PRINT "EXAMPLE:  JBS\THESIS\PROGRAMS\  (subdirectories separated by \)"
   LOCATE 9, 10: LINE INPUT "Enter the file path:  ", FILEPATH$
   LOCATE 13, 10: PRINT "(You must remember the absorber and engine specifications.)"
   LOCATE 12, 10: LINE INPUT "Enter the file name (up to 8 characters):  ", FILENAME$
   FILENAME$ = LEFT$(FILENAME$, 8)
   OPEN DRIVE$ + ":\" + FILEPATH$ + FILENAME$ + ".PRN" FOR OUTPUT AS #1
   WRITE #1, "RPM", "PET", "MAX PHI", "DEL W", "DEL We", "SRR", "TIME", "PHI", "PHI-DOT", "W"
   GOSUB CONTIN
   CLS
RETURN

REM  **** absorber data ****
ABSORBER:
    LINE (0, 0)-(479, 335), 0, BF
    COLOR 7
    LOCATE 8, 16: PRINT "Establish Absorber Parameters"
    LOCATE 9, 12: PRINT "(give in units shown in parentheses)"
    LOCATE 11, 6: PRINT "radius of cavity-circle (in):"
```

```
    LOCATE 12, 13: PRINT "radius of cavity (in):"
    LOCATE 13, 8: PRINT "number of cavities/rollers:"
    LOCATE 14, 13: PRINT "radius of roller (in):"
    LOCATE 15, 13: PRINT "length of roller (in):"
    LOCATE 16, 7: PRINT "density of roller (lb/in^3):"
    LOCATE 17, 7: PRINT "roller friction coefficient:"
    COLOR 4
MARK1:
  LOCATE 11, 37: LINE INPUT R3$: R3 = VAL(R3$)
  IF R3 < 1 THEN
    LOCATE 11, 37: PRINT "                    "
    GOTO MARK1
  END IF
MARK2:
  LOCATE 12, 37: LINE INPUT R1$: R1 = VAL(R1$)
  IF R1 <= 0 THEN
    LOCATE 12, 37: PRINT "                    "
    GOTO MARK2
  ELSEIF R1 >= R3 THEN
    LOCATE 12, 37: PRINT "                    "
    GOTO MARK2
  END IF
MARK3:
  LOCATE 13, 37: LINE INPUT NR$: NR = INT(VAL(NR$))
  IF NR < 1 THEN
    LOCATE 13, 37: PRINT "                    "
    GOTO MARK3
  END IF
MARK4:
  LOCATE 14, 37: LINE INPUT RW$: RW = VAL(RW$)
  IF RW >= R1 THEN
    LOCATE 14, 37: PRINT "                    "
    GOTO MARK4
  ELSEIF RW <= 0 THEN
    LOCATE 14, 37: PRINT "                    "
    GOTO MARK4
  END IF
  R2 = R1 - RW
  CC = 1 - (R1 / RW)
MARK5:
  LOCATE 15, 37: LINE INPUT L$: L = VAL(L$)
  IF L <= 0 THEN
    LOCATE 15, 37: PRINT "                    "
    GOTO MARK5
  END IF
MARK6:
  LOCATE 16, 37: LINE INPUT RHO$: RHO = VAL(RHO$)
  IF RHO <= 0 THEN
    LOCATE 16, 37: PRINT "                    "
    GOTO MARK6
  END IF
  DENS = RHO
  RHO = RHO / 386
  MW = RHO * PI * (RW ^ 2) * L
  IW = .5 * MW * (RW ^ 2)
MARK7:
```

```
  LOCATE 17, 37: LINE INPUT CF$: CF = VAL(CF$)
  IF CF < 0 THEN
    LOCATE 17, 37: PRINT "                    "
    GOTO MARK7
  ELSEIF CF > .1 THEN
    LOCATE 17, 37: PRINT "                    "
    GOTO MARK7
  END IF
  GOSUB CONTIN
RETURN

REM  **** engine data ****
ENGINE:
    LINE (0, 0)-(479, 335), 0, BF
    COLOR 7
    LOCATE 8, 17: PRINT "Establish Engine Parameters"
    LOCATE 9, 12: PRINT "(give in units shown in parentheses)"
    LOCATE 12, 5: PRINT "inertia of engine (lb-s^2/in):"
    LOCATE 13, 2: PRINT "cycle-average engine speed (rpm):"
    LOCATE 14, 8: PRINT "peak engine torque (ft-lb):"
    LOCATE 15, 4: PRINT "internal damping (in-lb s/rad):"
    COLOR 4
 MARK8:
   LOCATE 12, 37: LINE INPUT IM$: IM = VAL(IM$)
   IF IM < IW THEN
     LOCATE 12, 37: PRINT "                    "
     GOTO MARK8
   END IF
 MARK9:
   LOCATE 13, 37: LINE INPUT W$: W = INT(VAL(W$))
   IF W < 100 THEN
     LOCATE 13, 37: PRINT "                    "
     GOTO MARK9
   END IF
   TD = 1 / (W / 60)
   RPM = W
   W = W * 2 * PI / 60
 MARK10:
   LOCATE 14, 37: LINE INPUT PET1$: PET1 = VAL(PET1$)
   IF PET1 <= 0 THEN
     LOCATE 14, 37: PRINT "                    "
     GOTO MARK10
   ELSEIF PET1 > 9999 THEN
     LOCATE 14, 37: PRINT "                    "
     GOTO MARK10
   END IF
   PET = PET1 * 12
 MARK10A:
   LOCATE 15, 37: LINE INPUT CE$: CE = VAL(CE$)
   IF CE < 0 THEN
     LOCATE 15, 37: PRINT "                    "
     GOTO MARK10A
   ELSEIF CE > 10 THEN
     LOCATE 15, 37: PRINT "                    "
     GOTO MARK10A
   END IF
```

```
  GOSUB CONTIN
RETURN

INITIAL:
REM  **** this section establishes the initial conditions ****
  CLS : COLOR 7: LOCATE 4, 31: PRINT "INITIAL CONDITIONS"
  LOCATE 5, 22: PRINT "(give in units shown in parentheses)"
  LOCATE 10, 17: PRINT "Enter the initial time (s):"
  LOCATE 12, 16: PRINT "Enter the initial phi (rad):"
  LOCATE 14, 10: PRINT "Enter the initial phi-dot (rad/s):"
  LOCATE 16, 5: PRINT "Enter the initial engine speed (rad/s):"
MARK11:
  COLOR 4: LOCATE 10, 45: LINE INPUT NEWT$: X1 = VAL(NEWT$)
  IF X1 < 0 THEN
    LOCATE 10, 45: PRINT "                    "
    GOTO MARK11
  ELSEIF X1 > 9999 THEN
    LOCATE 10, 45: PRINT "                    "
    GOTO MARK11
  END IF
MARK12:
  COLOR 4: LOCATE 12, 45: LINE INPUT Y1$: YSTART(1) = VAL(Y1$)
  IF ABS(YSTART(1)) > (2 * PI) THEN
     LOCATE 12, 45: PRINT "                    "
     GOTO MARK12
  END IF
MARK13:
  COLOR 4: LOCATE 14, 45: LINE INPUT Y2$: YSTART(2) = VAL(Y2$)
MARK14:
  COLOR 4: LOCATE 16, 45: LINE INPUT Y3$: YSTART(3) = VAL(Y3$)
  IF YSTART(3) < 0 THEN
    LOCATE 16, 45: PRINT "                    "
    GOTO MARK14
  END IF
   YSTART(4) = YSTART(3)
   GOSUB CONTIN
RETURN

REM  **** data window ****
ADATA:
    LINE (480, 0)-(639, 335), 7, B
    COLOR 7: LOCATE 2, 63: PRINT "OUTPUT FILENAME"
    LOCATE 6, 64: PRINT "ABSORBER DATA"
    LOCATE 18, 65: PRINT "ENGINE DATA"
    COLOR 14: LOCATE 3, 65: PRINT LEFT$(FILENAME$, 8); ".PRN"
    LOCATE 8, 62: PRINT USING "  R3 = ###.####"; R3
    LOCATE 9, 62: PRINT USING "  R2 = ###.####"; R2
    LOCATE 10, 62: PRINT USING "  R1 = ###.####"; R1
    LOCATE 11, 62: PRINT USING "  RW = ###.####"; RW
    LOCATE 12, 62: PRINT USING "   L = ###.####"; L
    LOCATE 13, 62: PRINT USING "  NR = ###"; NR
    LOCATE 14, 62: PRINT USING "DENS = ##.#######"; DENS
    LOCATE 15, 62: PRINT USING "  CF = ##.####^^^^"; CF
    LOCATE 20, 62: PRINT USING "  IM = ###.####"; IM
    LOCATE 21, 62: PRINT USING " RPM = ######"; RPM
    LOCATE 22, 62: PRINT USING " PET = ######"; PET1
```

```
   LOCATE 23, 62: PRINT USING "  CE = ##.####^^^^"; CE
RETURN


REM  **** engine data ****
EDATA:
   COLOR 14
   LOCATE 20, 62: PRINT USING "  IM = ###.####"; IM
   LOCATE 21, 62: PRINT USING " RPM = ######"; RPM
   LOCATE 22, 62: PRINT USING " PET = ######"; PET1
   LOCATE 23, 62: PRINT USING "  CE = ##.####^^^^"; CE
RETURN

ERROR1:
RETURN

ERROR2:
RETURN

REM     **** we'll use this subroutine to write to the output file ****
SAVING:
      IF PHIMAX > PMAX THEN
         PMAX = PHIMAX
      END IF
      WRITE #1, RPM, PET1, PMAX, DLNEW, EDELW, SRR, X, Y(1), Y(2), Y(3)
RETURN

REM  **** results text for main code ****
RTEXT:
    COLOR 11: LOCATE 3, 28: PRINT "TIME"
    LOCATE 10, 27: PRINT "DEL W"
    LOCATE 17, 26: PRINT "MAX PHI"
RETURN

REM  **** continue message ****
CONTIN:
   COLOR 6: LOCATE 23, 23: PRINT "PRESS ANY KEY (almost) TO CONTINUE"
   DO WHILE INKEY$ = ""
   LOOP
   COLOR 7
   LOCATE 23, 23: PRINT "                                        "
RETURN

REM  **** end of run message ****
ENDRUN:
    COLOR 6
    LOCATE 23, 15: PRINT "PRESS SPACE-BAR TO END THIS RUN"
    COLOR 7
RETURN

REM  **** menu to repeat or exit program ****
CHOOSER:
BACK2:
LINE (0, 0)-(479, 335), 0, BF
COLOR 7
LOCATE 8, 15: PRINT "(1)  Redo Absorber Data"
```

```
LOCATE 10, 15: PRINT "(2)  Redo Engine Data"
LOCATE 12, 15: PRINT "(3)  Redo Initial Conditions"
LOCATE 14, 15: PRINT "(4)  Run Performance Simulation"
LOCATE 16, 15: PRINT "(5)  Exit Program"
COLOR 6
LOCATE 23, 16: PRINT "CHOOSE NUMBER FROM LIST ABOVE"
COLOR 7
BACK1:
NUMBER = VAL(INPUT$(1))
IF NUMBER < 1 THEN
    GOTO BACK1
ELSEIF NUMBER > 5 THEN
    GOTO BACK1
END IF
IF NUMBER = 1 THEN
    GOSUB ABSORBER
    GOSUB ADATA
    GOTO BACK2
ELSEIF NUMBER = 2 THEN
    GOSUB ENGINE
    GOSUB EDATA
    GOTO BACK2
ELSEIF NUMBER = 3 THEN
    GOSUB INITIAL
    GOSUB ADATA
    GOTO BACK2
END IF
LINE (0, 0)-(479, 335), 0, BF
RETURN

SUB DERIVS (X, Y(), DYDX())

SPHI = SIN(Y(1))
CPHI = COS(Y(1))
M = PET * SIN(4 * W * X) - (CE * (Y3))
A = NR * ((MW * ((R2 ^ 2) + (R2 * R3 * CPHI))) + (IW * CC))
B = NR * ((MW * ((R3 ^ 2) + (R2 ^ 2) + (2 * R2 * R3 * CPHI))) + IW) + IM
C = (NR * MW * R2 * R3 * SPHI * Y(2) * ((2 * Y(3)) + Y(2))) + M
D = NR * ((MW * (R2 ^ 2)) + (IW * (CC ^ 2)))
E = NR * ((MW * ((R2 ^ 2) + (R2 * R3 * CPHI))) + (IW * CC))
F = (NR * (-1) * MW * R2 * R3 * SPHI * (Y(3) ^ 2)) - (CF * Y(2))
DET = (A * E) - (D * B)

IF DET = 0 THEN
    FOR J = 1 TO 4
        DYDX(J) = 0
    NEXT J
ELSE
    DYDX(1) = Y(2)
    DYDX(2) = ((C * E) - (F * B)) / DET
    DYDX(3) = ((A * F) - (D * C)) / DET
    DYDX(4) = M / (IM + (NR * IW))
END IF

END SUB
```

```
SUB RK4 (Y(), DYDX(), N, X, H, YOUT(), DUM)

DIM YT(N), DYT(N), DYM(N)
HH = H * .5
H6 = H / 6!
XH = X + HH
FOR I = 1 TO N
   YT(I) = Y(I) + HH * DYDX(I)
NEXT I
CALL DERIVS(XH, YT(), DYT())
FOR I = 1 TO N
   YT(I) = Y(I) + HH * DYT(I)
NEXT I
CALL DERIVS(XH, YT(), DYM())
FOR I = 1 TO N
   YT(I) = Y(I) + H * DYM(I)
   DYM(I) = DYT(I) + DYM(I)
NEXT I
CALL DERIVS(X + H, YT(), DYT())
FOR I = 1 TO N
   YOUT(I) = Y(I) + H6 * (DYDX(I) + DYT(I) + 2! * DYM(I))
NEXT I
ERASE DYM, DYT, YT

END SUB

SUB RKQC (Y(), DYDX(), N, X, HTRY, EPS, YSCAL(), HDID, HNEXT, DUM)

FCOR = .0666666667#
ONE = 1!
SAFETY = .9
ERRCON = .0006
DIM YTEMP(N), YSAV(N), DYSAV(N)
PGROW = -.2
PSHRNK = -.25
XSAV = X
FOR I = 1 TO N
   YSAV(I) = Y(I)
   DYSAV(I) = DYDX(I)
NEXT I
H = HTRY
DO
   HH = .5 * H
   CALL RK4(YSAV(), DYSAV(), N, XSAV, HH, YTEMP(), DUM)
   X = XSAV + HH
   CALL DERIVS(X, YTEMP(), DYDX())
   CALL RK4(YTEMP(), DYDX(), N, X, HH, Y(), DUM)
   X = XSAV + H
   IF X = XSAV THEN PRINT "Stepsize not significant in RKQC.": EXIT SUB
   CALL RK4(YSAV(), DYSAV(), N, XSAV, H, YTEMP(), DUM)
   ERRMAX = 0!
   FOR I = 1 TO N
      YTEMP(I) = Y(I) - YTEMP(I)
      IF ABS(YTEMP(I) / YSCAL(I)) > ERRMAX THEN ERRMAX = ABS(YTEMP(I) / YSCAL(I))
   NEXT I
   ERRMAX = ERRMAX / EPS
```

```
  IF ERRMAX > ONE THEN
     H = SAFETY * H * (ERRMAX ^ PSHRNK)
     FLAG = 1
  ELSE
     HDID = H
     IF ERRMAX > ERRCON THEN
        HNEXT = SAFETY * H * (ERRMAX ^ PGROW)
     ELSE
        HNEXT = 4! * H
     END IF
     FLAG = 0
   END IF
LOOP WHILE FLAG = 1
FOR I = 1 TO N
   Y(I) = Y(I) + YTEMP(I) * FCOR
NEXT I
ERASE DYSAV, YSAV, YTEMP

END SUB
```

```
REM  ARKCYC.BAS
REM  Jeffrey B. Sharpe
REM  16 March 1993

REM     This program receives the dimensions of the Speckhart absorber, the engine parameters
REM     and the initial conditions to simulate a given number of cycles.  Data is saved at
REM     each time step instead of only at steady-state as with ARKSSCY.BAS.


DECLARE SUB DERIVS (X!, Y!(), DYDX!())
DECLARE SUB RK4 (Y!(), DYDX!(), N!, X!, H!, YOUT!(), DUM!)
DECLARE SUB RKQC (Y!(), DYDX!(), N!, X!, HTRY!, EPS!, YSCAL!(), HDID!, HNEXT!, DUM!)
COMMON SHARED R3, R2, R1, RW, CC, L, NR, RHO, CF, CE, MW, IW, IM, W, PET

NVAR = 4
DIM X(NVAR), Y(NVAR), DYDX(NVAR), YSCAL(NVAR), YSTART(NVAR), YOLD(NVAR)
DIM YMIN(NVAR), YMAX(NVAR)

PI = 3.14159265358#

REM  **** user input ****
    CLS : SCREEN 9: COLOR , 0
    GOSUB NAMEFILE
    GOSUB ABSORBER
    GOSUB ENGINE
    GOSUB INITIAL
    CLS
    GOSUB CYCLES
    GOSUB ADATA
    GOSUB RTEXT

REM  **** main code ****
    H = TD / 100
    HMAX = TD / 2
    HMIN = 1E-30
    EPS = .00001
    X = X1
    FOR I = 1 TO NVAR
        Y(I) = YSTART(I)
    NEXT I
    WRITE #1, "TIME", "PHI", "PHI-DOT", "THETA-DOT", "PHI-DDOT", "W-DOT", "MO", "MU"
    DO WHILE (X < ENDT)
        GOSUB RK
        IF INKEY$ = " " THEN
            EXIT DO
        END IF
    LOOP
    CLOSE #1
    END


REM  **** Runge-Kutta subroutine with stepsize adjustment from: ****
REM  **** NUMERICAL RECIPES Routines and Examples in BASIC ****
RK:
    FOR I = 1 TO NVAR              ' remember the old values of Y()
        YOLD(I) = Y(I)
```

```
    NEXT I
    CALL DERIVS(X, Y(), DYDX())
    FOR I = 1 TO NVAR
        YSCAL(I) = ABS(Y(I)) + ABS(H * DYDX(I)) + HMIN
    NEXT I

    CALL RKQC(Y(), DYDX(), NVAR, X, H, EPS, YSCAL(), HDID, HNEXT, DUM)

    IF ABS(HNEXT) < HMIN THEN
        GOSUB ERROR1
    ELSEIF ABS(HNEXT) > HMAX THEN
        GOSUB ERROR2
    ELSE
        H = HNEXT
    END IF

    COLOR 4
    LOCATE 13, 25: PRINT USING "###.######"; X
    COLOR 7

    BDOT2 = (Y(2) + Y(3)) ^ 2
    BDDOT = (DYDX(2) + DYDX(3))
    SINP = SIN(Y(1))
    COSP = COS(Y(1))
    NA = (R3 * DYDX(3) * SINP) - (R2 * BDOT2) - (R3 * (Y(3) ^ 2) * COSP)
    TA = (R3 * DYDX(3) * COSP) + (R2 * BDDOT) + (R3 * (Y(3) ^ 2) * SINP)
    NF = NR * MW * NA
    TF = NR * MW * TA
    MO = -(NF * (R3 * SINP)) - (TF * ((R3 * COSP) + R1))
    MU = ABS(TA / NA)

    WRITE #1, X, Y(1), Y(2), Y(3), DYDX(2), DYDX(3), MO, MU
RETURN

REM  **** name the data file and specify drive path ****
NAMEFILE:
    CLS : COLOR 7: LOCATE 4, 32: PRINT "Specify the Output File"
    LOCATE 7, 10: PRINT "Enter the drive (A, B, C, etc ....):": LOCATE 7, 48: DRIVE$ = INPUT$(1)
    LOCATE 7, 48: PRINT DRIVE$
    LOCATE 10, 10: PRINT "EXAMPLE:  JBS\THESIS\PROGRAMS\  (subdirectories separated by \)"
    LOCATE 9, 10: LINE INPUT "Enter the file path:  ", FILEPATH$
    LOCATE 13, 10: PRINT "(You must remember the absorber and engine specifications.)"
    LOCATE 12, 10: LINE INPUT "Enter the file name (up to 8 characters):  ", FILENAME$
    FILENAME$ = LEFT$(FILENAME$, 8)
    OPEN DRIVE$ + ":\" + FILEPATH$ + FILENAME$ + ".PRN" FOR OUTPUT AS #1
    WRITE #1, "PET", "R3", "R1", "RW", "NR", "DENS", "HI THERE", 0
    GOSUB CONTIN
    CLS
RETURN

REM  **** absorber data ****
ABSORBER:
    LINE (0, 0)-(479, 335), 0, BF
    COLOR 7
    LOCATE 8, 16: PRINT "Establish Absorber Parameters"
    LOCATE 9, 12: PRINT "(give in units shown in parentheses)"
```

```
    LOCATE 11, 6: PRINT "radius of cavity-circle (in):"
    LOCATE 12, 13: PRINT "radius of cavity (in):"
    LOCATE 13, 8: PRINT "number of cavities/rollers:"
    LOCATE 14, 13: PRINT "radius of roller (in):"
    LOCATE 15, 13: PRINT "length of roller (in):"
    LOCATE 16, 7: PRINT "density of roller (lb/in^3):"
    LOCATE 17, 7: PRINT "roller friction coefficient:"
    COLOR 4
MARK1:
  LOCATE 11, 37: LINE INPUT R3$: R3 = VAL(R3$)
  IF R3 < 1 THEN
    LOCATE 11, 37: PRINT "                    "
    GOTO MARK1
  END IF
MARK2:
  LOCATE 12, 37: LINE INPUT R1$: R1 = VAL(R1$)
  IF R1 <= 0 THEN
    LOCATE 12, 37: PRINT "                    "
    GOTO MARK2
  ELSEIF R1 >= R3 THEN
    LOCATE 12, 37: PRINT "                    "
    GOTO MARK2
  END IF
MARK3:
  LOCATE 13, 37: LINE INPUT NR$: NR = INT(VAL(NR$))
  IF NR < 1 THEN
    LOCATE 13, 37: PRINT "                    "
    GOTO MARK3
  END IF
MARK4:
  LOCATE 14, 37: LINE INPUT RW$: RW = VAL(RW$)
  IF RW >= R1 THEN
    LOCATE 14, 37: PRINT "                    "
    GOTO MARK4
  ELSEIF RW <= 0 THEN
    LOCATE 14, 37: PRINT "                    "
    GOTO MARK4
  END IF
  R2 = R1 - RW
  CC = 1 - (R1 / RW)
MARK5:
  LOCATE 15, 37: LINE INPUT L$: L = VAL(L$)
  IF L <= 0 THEN
    LOCATE 15, 37: PRINT "                    "
    GOTO MARK5
  END IF
MARK6:
  LOCATE 16, 37: LINE INPUT RHO$: RHO = VAL(RHO$)
  IF RHO <= 0 THEN
    LOCATE 16, 37: PRINT "                    "
    GOTO MARK6
  END IF
  DENS = RHO
  RHO = RHO / 386
  MW = RHO * PI * (RW ^ 2) * L
  IW = .5 * MW * (RW ^ 2)
```

```
MARK7:
  LOCATE 17, 37: LINE INPUT CF$: CF = VAL(CF$)
  IF CF < 0 THEN
    LOCATE 17, 37: PRINT "                "
    GOTO MARK7
  ELSEIF CF > .1 THEN
    LOCATE 17, 37: PRINT "                "
    GOTO MARK7
  END IF
  GOSUB CONTIN
RETURN

REM  **** engine data ****
ENGINE:
    LINE (0, 0)-(479, 335), 0, BF
    COLOR 7
    LOCATE 8, 17: PRINT "Establish Engine Parameters"
    LOCATE 9, 12: PRINT "(give in units shown in parentheses)"
    LOCATE 12, 5: PRINT "inertia of engine (lb-s^2/in):"
    LOCATE 13, 2: PRINT "cycle-average engine speed (rpm):"
    LOCATE 14, 8: PRINT "peak engine torque (ft-lb):"
    LOCATE 15, 4: PRINT "internal damping (in-lb s/rad):"
    COLOR 4
MARK8:
  LOCATE 12, 37: LINE INPUT IM$: IM = VAL(IM$)
  IF IM < IW THEN
    LOCATE 12, 37: PRINT "                "
    GOTO MARK8
  END IF
MARK9:
  LOCATE 13, 37: LINE INPUT W$: W = INT(VAL(W$))
  IF W < 100 THEN
    LOCATE 13, 37: PRINT "                "
    GOTO MARK9
  END IF
  TD = 1 / (W / 60)
  RPM = W
  W = W * 2 * PI / 60
MARK10:
  LOCATE 14, 37: LINE INPUT PET1$: PET1 = VAL(PET1$)
  IF PET1 <= 0 THEN
    LOCATE 14, 37: PRINT "                "
    GOTO MARK10
  ELSEIF PET1 > 9999 THEN
    LOCATE 14, 37: PRINT "                "
    GOTO MARK10
  END IF
  PET = PET1 * 12
MARK10A:
  LOCATE 15, 37: LINE INPUT CE$: CE = VAL(CE$)
  IF CE < 0 THEN
    LOCATE 15, 37: PRINT "                "
    GOTO MARK10A
  ELSEIF CE > 10 THEN
    LOCATE 15, 37: PRINT "                "
    GOTO MARK10A
```

```
  END IF
  GOSUB CONTIN
  WRITE #1, PET1, R3, R1, RW, NR, DENS, "BIG GUY", 0
RETURN

INITIAL:
REM  **** this section establishes the initial conditions ****
  CLS : COLOR 7: LOCATE 4, 31: PRINT "INITIAL CONDITIONS"
  LOCATE 5, 22: PRINT "(give in units shown in parentheses)"
  LOCATE 10, 17: PRINT "Enter the initial time (s):"
  LOCATE 12, 16: PRINT "Enter the initial phi (rad):"
  LOCATE 14, 10: PRINT "Enter the initial phi-dot (rad/s):"
  LOCATE 16, 5: PRINT "Enter the initial engine speed (rad/s):"
MARK11:
  COLOR 4: LOCATE 10, 45: LINE INPUT NEWT$: X1 = VAL(NEWT$)
  IF X1 < 0 THEN
    LOCATE 10, 45: PRINT "                    "
    GOTO MARK11
  ELSEIF X1 > 9999 THEN
    LOCATE 10, 45: PRINT "                    "
    GOTO MARK11
  END IF
MARK12:
  COLOR 4: LOCATE 12, 45: LINE INPUT Y1$: YSTART(1) = VAL(Y1$)
  IF ABS(YSTART(1)) > (2 * PI) THEN
     LOCATE 12, 45: PRINT "                    "
     GOTO MARK12
  END IF
MARK13:
  COLOR 4: LOCATE 14, 45: LINE INPUT Y2$: YSTART(2) = VAL(Y2$)
MARK14:
  COLOR 4: LOCATE 16, 45: LINE INPUT Y3$: YSTART(3) = VAL(Y3$)
  IF YSTART(3) < 0 THEN
    LOCATE 16, 45: PRINT "                    "
    GOTO MARK14
  END IF
   YSTART(4) = YSTART(3)
   GOSUB CONTIN
RETURN

REM  **** how many cycles are we running ****
CYCLES:
    CLS
    COLOR 7
    LOCATE 12, 24: PRINT "Establish Duration of Simulation"
    LOCATE 14, 21: PRINT "number of crankshaft revolutions:"
MARK15:
    COLOR 4
    LOCATE 14, 55: LINE INPUT NCR$: NCR = VAL(NCR$)
    IF NCR < .1 THEN
       LOCATE 14, 55: PRINT "                    "
       GOTO MARK15
    ELSEIF NCR > 99 THEN
       LOCATE 14, 55: PRINT "                    "
       GOTO MARK15
    END IF
```

```
    GOSUB CONTIN
    ENDT = (X1 + (NCR * TD))
    CLS
RETURN

REM  **** data window ****
ADATA:
    LINE (480, 0)-(639, 335), 7, B
    COLOR 7: LOCATE 2, 63: PRINT "OUTPUT FILENAME"
    LOCATE 6, 64: PRINT "ABSORBER DATA"
    LOCATE 18, 65: PRINT "ENGINE DATA"
    COLOR 14: LOCATE 3, 65: PRINT LEFT$(FILENAME$, 8); ".PRN"
    LOCATE 8, 62: PRINT USING "  R3 = ###.####"; R3
    LOCATE 9, 62: PRINT USING "  R2 = ###.####"; R2
    LOCATE 10, 62: PRINT USING "  R1 = ###.####"; R1
    LOCATE 11, 62: PRINT USING "  RW = ###.####"; RW
    LOCATE 12, 62: PRINT USING "   L = ###.####"; L
    LOCATE 13, 62: PRINT USING "  NR = ###"; NR
    LOCATE 14, 62: PRINT USING "DENS = ##.#######"; DENS
    LOCATE 15, 62: PRINT USING "  CF = ##.####^^^^"; CF
    LOCATE 20, 62: PRINT USING "  IM = ###.####"; IM
    LOCATE 21, 62: PRINT USING " RPM = ######"; RPM
    LOCATE 22, 62: PRINT USING " PET = ######"; PET1
    LOCATE 23, 62: PRINT USING "  CE = ##.####^^^^"; CE
RETURN


REM  **** engine data ****
EDATA:
    COLOR 14
    LOCATE 20, 62: PRINT USING "  IM = ###.####"; IM
    LOCATE 21, 62: PRINT USING " RPM = ######"; RPM
    LOCATE 22, 62: PRINT USING " PET = ######"; PET1
    LOCATE 23, 62: PRINT USING "  CE = ##.####^^^^"; CE
RETURN

ERROR1:
RETURN

ERROR2:
RETURN


REM  **** results text for main code ****
RTEXT:
    COLOR 11: LOCATE 12, 28: PRINT "TIME"
RETURN

REM  **** continue message ****
CONTIN:
    COLOR 6: LOCATE 23, 23: PRINT "PRESS ANY KEY (almost) TO CONTINUE"
    DO WHILE INKEY$ = ""
    LOOP
    COLOR 7
    LOCATE 23, 23: PRINT "                                   "
RETURN
```

```
SUB DERIVS (X, Y(), DYDX())

SPHI = SIN(Y(1))
CPHI = COS(Y(1))
M = PET * SIN(4 * W * X) - (CE * (Y3))
A = NR * ((MW * ((R2 ^ 2) + (R2 * R3 * CPHI))) + (IW * CC))
B = NR * ((MW * ((R3 ^ 2) + (R2 ^ 2) + (2 * R2 * R3 * CPHI))) + IW) + IM
C = (NR * MW * R2 * R3 * SPHI * Y(2) * ((2 * Y(3)) + Y(2))) + M
D = NR * ((MW * (R2 ^ 2)) + (IW * (CC ^ 2)))
E = NR * ((MW * ((R2 ^ 2) + (R2 * R3 * CPHI))) + (IW * CC))
F = (NR * (-1) * MW * R2 * R3 * SPHI * (Y(3) ^ 2)) - (CF * Y(2))
DET = (A * E) - (D * B)

IF DET = 0 THEN
    FOR J = 1 TO 4
        DYDX(J) = 0
    NEXT J
ELSE
    DYDX(1) = Y(2)
    DYDX(2) = ((C * E) - (F * B)) / DET
    DYDX(3) = ((A * F) - (D * C)) / DET
    DYDX(4) = M / (IM + (NR * IW))
END IF

END SUB

SUB RK4 (Y(), DYDX(), N, X, H, YOUT(), DUM)

DIM YT(N), DYT(N), DYM(N)
HH = H * .5
H6 = H / 6!
XH = X + HH
FOR I = 1 TO N
   YT(I) = Y(I) + HH * DYDX(I)
NEXT I
CALL DERIVS(XH, YT(), DYT())
FOR I = 1 TO N
   YT(I) = Y(I) + HH * DYT(I)
NEXT I
CALL DERIVS(XH, YT(), DYM())
FOR I = 1 TO N
   YT(I) = Y(I) + H * DYM(I)
   DYM(I) = DYT(I) + DYM(I)
NEXT I
CALL DERIVS(X + H, YT(), DYT())
FOR I = 1 TO N
   YOUT(I) = Y(I) + H6 * (DYDX(I) + DYT(I) + 2! * DYM(I))
NEXT I
ERASE DYM, DYT, YT

END SUB

SUB RKQC (Y(), DYDX(), N, X, HTRY, EPS, YSCAL(), HDID, HNEXT, DUM)

FCOR = .0666666667#
ONE = 1!
```

```
SAFETY = .9
ERRCON = .0006
DIM YTEMP(N), YSAV(N), DYSAV(N)
PGROW = -.2
PSHRNK = -.25
XSAV = X
FOR I = 1 TO N
   YSAV(I) = Y(I)
   DYSAV(I) = DYDX(I)
NEXT I
H = HTRY
DO
   HH = .5 * H
   CALL RK4(YSAV(), DYSAV(), N, XSAV, HH, YTEMP(), DUM)
   X = XSAV + HH
   CALL DERIVS(X, YTEMP(), DYDX())
   CALL RK4(YTEMP(), DYDX(), N, X, HH, Y(), DUM)
   X = XSAV + H
   IF X = XSAV THEN PRINT "Stepsize not significant in RKQC.": EXIT SUB
   CALL RK4(YSAV(), DYSAV(), N, XSAV, H, YTEMP(), DUM)
   ERRMAX = 0!
   FOR I = 1 TO N
      YTEMP(I) = Y(I) - YTEMP(I)
      IF ABS(YTEMP(I) / YSCAL(I)) > ERRMAX THEN ERRMAX = ABS(YTEMP(I) / YSCAL(I))
   NEXT I
   ERRMAX = ERRMAX / EPS
   IF ERRMAX > ONE THEN
      H = SAFETY * H * (ERRMAX ^ PSHRNK)
      FLAG = 1
   ELSE
      HDID = H
      IF ERRMAX > ERRCON THEN
         HNEXT = SAFETY * H * (ERRMAX ^ PGROW)
      ELSE
         HNEXT = 4! * H
      END IF
      FLAG = 0
   END IF
LOOP WHILE FLAG = 1
FOR I = 1 TO N
   Y(I) = Y(I) + YTEMP(I) * FCOR
NEXT I
ERASE DYSAV, YSAV, YTEMP

END SUB
```

VITA

Jeffrey Bruce Sharpe was born 16 August 1967 in Knoxville, TN. Having resided primarily in Georgia and Tennessee, he graduated from Rossville High School in Rossville, GA in 1985.

Mr. Sharpe entered the Georgia Institute of Technology in September 1985 to pursue a B.S. degree in aerospace engineering. He transferred to the University of Tennessee, Knoxville in June 1987, changing his major to mechanical engineering. He was awarded the B.S. in Mechanical Engineering in August 1991.

Mr. Sharpe entered graduate school in August 1991. He was awarded the M.S. in Mechanical Engineering in May 1993.