To the Graduate Council:

I am submitting herewith a thesis written by Prospero Dionisio Bernal-Nadal entitled "Immediate Deflection of Reinforced Concrete Beams: A Moment Curvature Approach." I recommend that it be accepted in partial fulfillment of the requirements for the degree of Master of Science, with a major in Civil Engineering.

Edwin G. Burdette

Edwin G. Burdette, Major Professor

We have read this thesis
and recommend its acceptance:

D.W. Goodpasture

Charles R Walker

Accepted for the Council:

Hilton A. Smith

Vice Chancellor
Graduate Studies and Research

Thesis
76
.B475
Cop. 2

IMMEDIATE DEFLECTION OF REINFORCED CONCRETE BEAMS: A MOMENT CURVATURE APPROACH

A Thesis

Presented for the

Master of Science

Degree

The University of Tennessee, Knoxville

Prospero Dionisio Bernal-Nadal

December 1976

1304413

ACKNOWLEDGEMENTS

The author wishes to express sincere appreciate to Dr. Edwin G. Burdette for his invaluable guidance, genuine interest and constant encouragement during the period of this study. His constructive comments contributed greatly to this thesis.

Thanks are due to Dr. David Goodpasture and to Professor Charles R. Walker who served on the graduate committee and assisted in the review of the manuscript.

I would like to especially thank my wife Evelyn. The enthusiasm and support which she provided during the course of this study were immeasurably valuable. I would also like to thank her for her help preparing the first draft and proof reading the final version of this thesis.

Finally, I wish to acknowledge my parents for the genuine interest and the constant encouragement that they have provided, not only throughout my graduate studies but always.

ABSTRACT

The immediate deflection of reinforced concrete members is quite sensitive to whether the member is uncracked or cracked; and, if cracked, how severely cracked. The severity of cracking varies along the span as the moment changes. Thus, since the moment of inertia is reduced by cracking, its value will change along the span according to the cracking pattern. This effect, which apparently is unique to reinforced concrete, makes the theoretical calculation of immediate deflections a complex problem.

The primary objective of this study was to develop a method to calculate the short-time deflection of reinforced concrete members based on a knowledge of the moment-curvature relationships. It was shown by comparisons with test data that the moment-curvature approach provides answers which are, within the limit of predictability of the variables involved, identical to the measured values. A computer program to carry out the required computations is presented.

In addition to the general method based on moment-curvature relationships, two simplified procedures to predict short-time deflections were also derived. The results obtained from these simplified versions of the M-ϕ approach were comparable to those obtained with the method presently recommended in the current ACI Building Code (ACI 318-71).

TABLE OF CONTENTS

CHAPTER		PAGE
I.	INTRODUCTION	1
	The Problem	1
	Description of Methods Presented	4
	Scope	6
II.	HISTORICAL REVIEW	8
	Calculation Procedures	8
	The ACI Approach	14
III.	GENERAL METHOD FOR CALCULATING DEFLECTIONS	16
	Calculation of Deformations from Curvatures	16
	Moment Curvature Relationships	18
	Curvature of a Section	18
	Significant Points on the M-ϕ Curve	20
	First Cracking of Concrete	20
	Yielding of the Tension Reinforcement	25
	Summary	30
	The Analogy of Angle Loads	30
	The Conjugate Beam	30
	The General Method, as It Applies to Reinforced Concrete Beams, Step by Step	31
	A Numerical Example in Detail	32
	Additional Effects on the Deformations of Members Calculated from Curvatures	39

CHAPTER PAGE

Effect of Concrete Tension Between Flexural Cracks . . . 39

Effect of Diagonal Tension Cracks and Bond Slip. 42

IV. SIMPLIFIED PROCEDURES TO CALCULATE IMMEDIATE DEFLECTIONS IN MEMBERS OF REINFORCED CONCRETE 44

The Moment of Inertia at Section of a Reinforced Concrete Member, Given the Bending Moment (Method 1). 47

Some Basic Concepts. 47

Derivation 49

The Effective Moment of Inertia of a Simple Beam with Uniform Load (Method 2). 55

Some Basic Concepts. 55

Derivation 58

V. THE SIMPLIFIED PROCEDURES: ILLUSTRATION AND COMPARISONS WITH ACI AND TEST DATA. 64

A Numerical Example Illustrating Method 1 and Method 2 . . 64

Comparison with Test Results 68

Rectangular Beams. 72

Tee Beams. 73

VI. SUMMARY AND CONCLUSIONS. 74

Summary. 74

Conclusions. 75

LIST OF REFERENCES 78

APPENDICES 81

APPENDIX A. EXPLANATION OF THE COMPUTER PROGRAM 82

CHAPTER PAGE

APPENDIX B. THE PROGRAM 87

APPENDIX C. DERIVATIONS 92

VITA 101

LIST OF TABLES

TABLE		PAGE
1.	COEF Versus $\frac{a}{L}$	61
2.	Details of Selected Beams	69
3.	Material Properties and Beam Parameters	70
4.	Computed Short-Time Deflections and Comparison with Test Results	71

LIST OF FIGURES

FIGURE		PAGE
1.	Various Stages of Stress Distribution in a Reinforced Concrete Beam Carrying Service Loads	2
2.	European Concrete Committee Recommended Procedures for Calculating Short-Time Deflection	13
3.	Deflection Due to Flexural Deformation of an Element.	17
4.	Stress-Strain Distribution in a Section of a Flexural Member.	19
5.	M-ϕ Curve for a Typically Reinforced Concrete Section	21
6.	Section of M-ϕ Curve Required for Deflection Calculations . .	22
7.	Stress and Strain Distribution in a Beam Cross-Section Just Before Cracking.	23
8.	Distribution of Strain and Stress at Yielding: (a) When the Concrete Elastic Limit Is Not Exceeded and (b) Distribution When the Maximum Stress Exceeds the Elastic Limit	26
9.	M-ϕ Curve for a Typically Reinforced Concrete Section	29
10.	Beam for Example of the Use of the General Method	33
11.	Strain Distribution at a Crack, Section 1, and in the Region Between Cracks, Section 2, in a Flexural Member.	41
12.	M-ϕ Curve for a Typically Reinforced Concrete Section	48
13.	Distribution of Curvatures in Three Simply Supported Reinforced Concrete Beams	54

FIGURE PAGE

14. (a) Simple Beam with Uniform Load, (b) Moment Diagram and (c) Curvature Diagram 56

15. COEF Versus $\frac{a}{L}$ for Use in Equation (4.25). 63

16. Beam for Example Illustrating the Use of Method 1 and Method 2. 65

C.1. Determination of A_1D_1 and A_2D_2. 96

C.2. Area Between a Parabolic Curve and a Secant 97

NOTATION

A_s = area of tension steel.

A'_s = area of compression steel.

a = distance from the support of a simple beam to the point where the bending moment is equal to M_{cr}.

b = width of rectangular beam.

C = resultant concrete compressive force.

d = distance from the extreme compressive fiber to the centroid of the tension steel.

E = modulus of elasticity.

E_c = modulus of elasticity of concrete.

E_s = modulus of elasticity of steel.

f_c = maximum compressive stress in the concrete.

f'_c = ultimate compressive stress of concrete (based on 6 x 12 inch cylinders).

f_s = stress in steel reinforcement.

f_y = yield stress of the reinforcement.

f_{cr} = concrete modulus of rupture.

h = depth of the beam.

I = moment of inertia.

I_{eff} = effective moment of inertia.

I_s = moment of inertia at a section subjected to a bending moment M_s.

I_{tc} = moment of inertia of the cracked transformed section.

I_{tu} = moment of inertia of the uncracked transformed section.

I_g = moment of inertia of the gross concrete section.

kd = distance from extreme compression fiber to neutral axis.

L = beam span.

M = bending moment.

M_e = bending moment required to make the most compressed concrete fiber reach 0.5 f'_c.

M_{cr} = cracking moment.

M_s = maximum bending moment at working loads.

M_y = yield moment.

n = modular ratio defined as $\frac{E_s}{E_c}$.

w = load per unit length of beam.

α = a non-dimensional parameter defined as $\frac{M_s}{M_{cr}}$.

γ = a non-dimensional parameter defined as $\frac{M_s}{M_e}$.

ε_c = concrete strain in the extreme compressive fiber.

ε_{ct} = concrete strain just before cracking.

ε_s = steel strain.

ε_y = yield strain of the reinforcement.

Δ = deflection.

ϕ = curvature.

ϕ_{cr} = curvature at cracking.

ϕ_e = curvature induced by M_e.

ϕ_y = curvature at yielding.

CHAPTER I

INTRODUCTION

With the use of concrete and steel of higher strengths, and the introduction of strength design, shallower sections and more slender structural elements are the logical result. Also, modern building structures often contain walls and partitions with non-structural elements which may be prone to damage caused by deformations of the structural members. Hence, the ability to predict the deflection of flexural members under service loads is assuming greater importance.

The deflection of reinforced concrete elements should be estimated in two steps: (1) the immediate deflection that occurs at first loading and (2) the additional deflection that occurs with time because of creep and shrinkage of the concrete. This thesis is only concerned with the first one of these two steps.

The principal factor affecting the immediate deflection of a reinforced concrete member is the amount of flexural cracking present. This study deals with the problem of obtaining an effective moment of inertia to determine the flexural rigidity for deflection calculations of cracked members in the elastic range.

I. THE PROBLEM

A reinforced concrete beam is a member whose various sections along the span are, typically, subjected to distinctly different stress configurations during bending (Figure 1). At sections with small bending

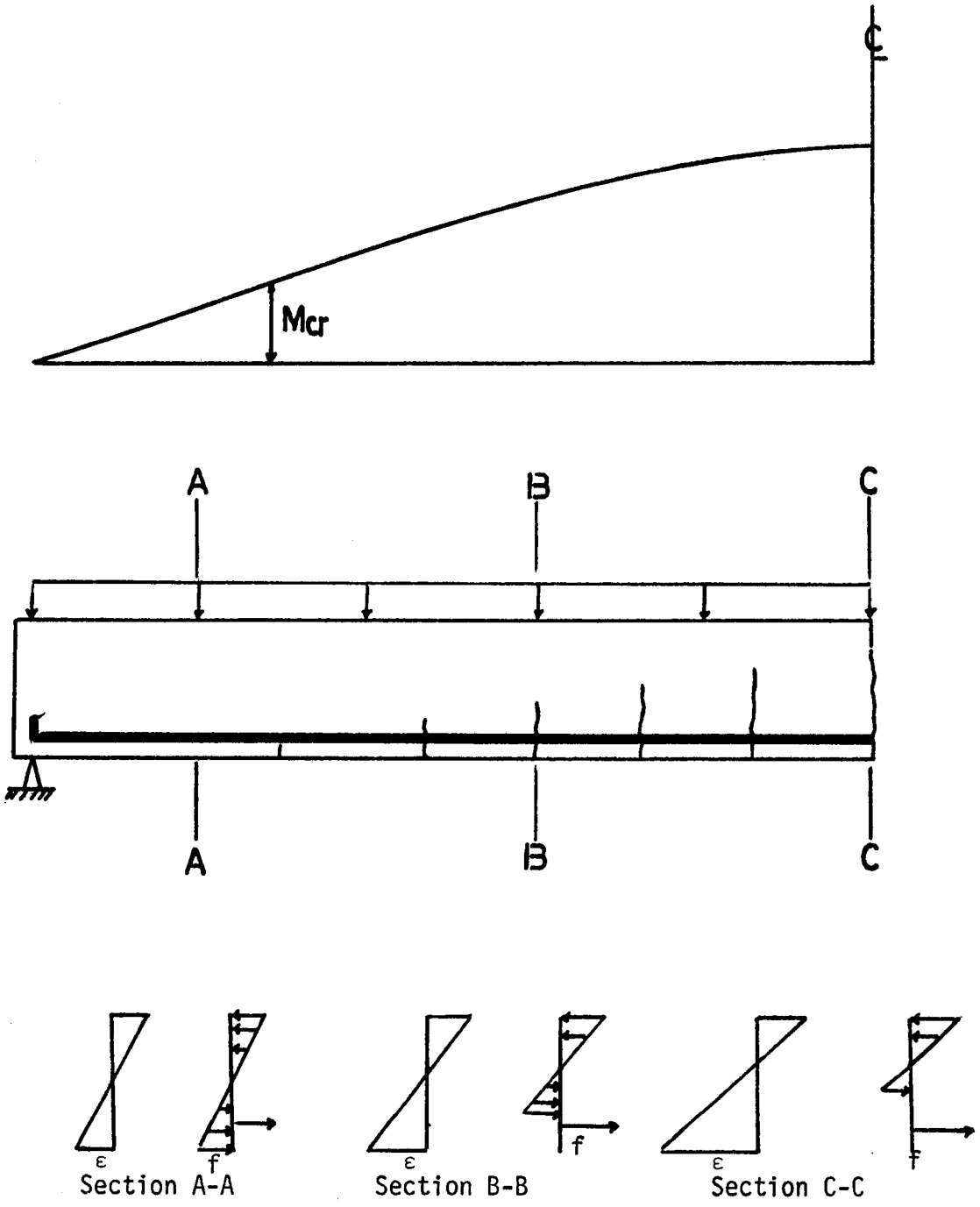

Figure 1. Various Stages of Stress Distribution in a Reinforced Concrete Beam Carrying Service Loads

moments the concrete works both in tension and compression (Section A-A). At sections with greater moments the concrete in tension fails at the outer fibers and minute cracks are formed (Section B-B). At locations with still greater moments the tensile failure in the concrete is more extensive, cracking extends closer to the neutral axis, and the cracks widen (Section C-C).

Since the moment of inertia is reduced by cracking, its value will not be constant along the member but will vary according to the cracking pattern. In a cracked member it is desirable, in the calculation of deflections, to use an effective moment of inertia, I_{eff}, that will have a value between those derived for the fully cracked and the uncracked sections (1).

The ACI 318-71 (2) code has recommended the use of the following expression for the effective moment of inertia:

$$I_{eff} = \left(\frac{M_{cr}}{M_s}\right)^3 I_g + \left[1 - \left(\frac{M_{cr}}{M_s}\right)^3\right] I_{tc} \qquad (1.1)$$

where I_g = moment of inertia of the uncracked section, I_{tc} = moment of inertia of the transformed cracked section, M_s = maximum moment in member at stage at which the deflection is being computed, and M_{cr} = moment at first cracking.

Equation (1.1) is an empirical expression developed by Branson (3) based on a set of tests on simply supported rectangular beams with uniform load.

The ability of Equation (1.1) to accurately predict the effective

moment of inertia for other types of loading with different cross-sections and support conditions is questionable. A non-empirical solution to the problem of obtaining the effective moment of inertia, I_{eff}, is desirable.

II. DESCRIPTION OF METHODS PRESENTED

It is known that the effective moment of inertia, I_{eff}, is among other things a function of the type of loading; this fact immediately rules out the possibility of deriving a general equation for I_{eff} that will be equally accurate for all design situations. However, the moment of inertia at a given section of a reinforced concrete member is only a function of the applied bending moment at that section. This suggests the possibility of deriving an equation for the moment of inertia at a particular section, given the bending moment. With such an equation available, it is possible to obtain a lower bound for the effective moment of inertia of the member as a whole by simply evaluating the moment of inertia at the section of maximum moment. This equation is derived and explained in detail in Chapter IV of this thesis (Method 1).

It is also possible to obtain an "exact" equation for the effective moment of inertia of a given beam if the shape of the moment diagram is fixed. This is equivalent to fixing the loading type and support condition. Since the case of uniform load is so common in reinforced concrete design, this type of loading has been selected in this study. The derivation of the equation for I_{eff} for this particular case as presented in this thesis is based on a correction to the curvature diagram that would be obtained if the moment of inertia was assumed constant and equal to that at midspan (Method 2).

The immediate deflection of reinforced concrete members caused by service loads is generally calculated using the usual elastic theory equations for deflections. Most of these equations may be written in the form:

$$\Delta = K_1 \frac{WL^3}{E_c I_{eff}} \tag{1.2}$$

in which K_1 is a constant depending on the type of loading and end restrains, W is the total load on the span, L, and $E_c I_{eff}$ is the effective flexural regidity of the beam cross-section. It is apparent that the determination of the effective moment of inertia, I_{eff}, is a key parameter when evaluating Equation (1.2). This equation is commonly used in the calculation of immediate deflections because it is simple and well suited for engineering purposes.

Actually, it is not necessary to obtain the value of the effective moment of inertia to obtain the immediate deflection of a reinforced concrete member. The deflection of a beam from a reference base of zero stress, strain and deflection can be evaluated if the magnitude and distribution of the curvatures, ϕ (angle change per unit length), for the beam span are known. When the moment at a section is known, the determination of the corresponding curvature is not difficult. An explanation of a procedure to obtain curvatures from moments in reinforced concrete sections is presented in Chapter III of this thesis.

A computer program was developed in this study to calculate immediate deflections in reinforced concrete beams. The program, given

the beam parameters and the loading, computes the moment diagram and uses the corresponding moment-curvature relationships to obtain the curvatures along the span. With the curvatures along the span known, the program performs the necessary integration numerically and obtains the required deflection. The solutions obtained from this program are considered in this study as "exact" and will be used as such in Chapter V when comparisons are made between the deflections obtained from the simplified methods proposed in Chapter IV and the solutions obtained using the current ACI 318-71 recommendations. The beams used in Chapter V for illustration and comparison of the various methods were selected from test beams used in investigations by Yu and Winter (4) and by Washa and Fluck (5). The actual measured deflection in these beams is also shown for comparison with the several methods treated in this thesis.

Appendix A presents a detailed explanation and guide to the computer program. Appendix B shows a list of the main program and the library subroutine.

III. SCOPE

This study is only concerned with the immediate deflection of reinforced concrete flexural members. No consideration is given here to the incremental deflection that occurs with time due to concrete creep and shrinkage. For a detailed treatment of the effect of creep and shrinkage in the final deflection of reinforced concrete beams, the reader is referred to reference (4).

This thesis is limited to determinative methods of predicting immediate deflections. Actually, the deflection of a reinforced concrete

beam is influenced by so many imprecise parameters and unpredictable variables that it is not possible to develop a method with a nominal 100 percent accuracy. The problem of establishing the probability of obtaining the predicted deflection is a matter of the theory of probability. Of course, as the methods to compute deflections improve, the probability of obtaining the predicted deflection increases. A rather detailed discussion of the subject is presented in reference (6).

Although the methods to calculate immediate deflections that are proposed in this thesis are not limited to any particular cross-sectional shape, only rectangular and tee sections are used in all examples and illustrations presented throughout the thesis. It is believed that these two cross-sectional shapes cover most of the practical cases encountered in reinforced concrete design.

CHAPTER II

HISTORICAL REVIEW

Since the early 1900's, a number of simplified procedures to calculate the immediate deflection of reinforced concrete members have been proposed. In all these simplified procedures, deflections are calculated based on the assumption that the reinforced concrete element can be treated as if it were made of a homogeneous and elastic material. Under this assumption it is not necessary to calculate the magnitude and distribution of the curvatures along the element. The difference between the various methods proposed is found in the values assigned to the modulus of elasticity, E, and the moment of inertia, I.

The following is a description of some of these methods, in order of their chronological appearance in the literature.

I. CALCULATION PROCEDURES

In 1914 Maney (7) proposed a formula

$$\Delta = K_3 L^2 \frac{M_{max}}{E_c I} \tag{2.1}$$

where K_3 is a constant depending on loading and end conditions and M_{max} is the maximum bending moment in the span ($K_3 = \frac{5}{48}$ and $M_{max} = \frac{wL^2}{8}$ for a uniform loaded simple beam, etc.). Equation (2.1) is based on a cracked transformed section throughout the length of the span.

In 1924 Swain (8) presented an expression for EI based on a cracked

section as follows:

$$\frac{M}{E_c I} = \frac{\epsilon_s}{(1 - k)d} \tag{2.2}$$

but $\epsilon_s = \frac{f_s}{E_s}$ and $M = f_s A_s jd$ which, when substituted into Equation (2.2), gives:

$$E_c I = E_s A_s (1 - k) jd^2 \tag{2.3}$$

or

$$I = nA_s (1 - k) jd^2 \tag{2.4}$$

Equation (2.4) is a useful expression for the cracked moment of inertia.

In 1931 Mirela (9), reporting as a chairman of ACI Committee 307, suggested the adoption of Equation (2.1), which is based on a cracked section, for the calculation of deflections. At that time no particular problem was associated with this assumption. It was known to be conservative and, anyway, members resulting from current design procedures were usually, even under this assumption, stiff enough to satisfy the limitations.

In 1940 Murashev (10) proposed that the cracked, transformed section be used for calculating I, but that an increased effective steel modulus of elasticity, E_s, be used to account for the participation of tensile concrete between cracks:

$$E_s = \frac{E_s}{\psi} \quad \text{where } \psi \leq 1 \tag{2.5}$$

$$\psi = 1 - (\frac{2}{3})(\frac{M_{cr}}{M})^2 \tag{2.6}$$

in which M is the moment at service load and M_{cr} is the cracking moment. A detailed description (in English) of Murashev's derivation was reported by Pregnoff in a private, unpublished communication to the committee.

For practical purposes, the cracking moment can be calculated as

$$M_{cr} = \frac{f_r I_g}{Y_t} \tag{2.7}$$

where f_r is the modulus of rupture of the concrete and I_g and Y_t refer to the gross concrete section.

In 1947 the Portland Cement Association (11), in a widely followed bulletin, recommended the use of the uncracked moment of inertia of the gross section, ignoring the effect of the steel. Comparisons were made with experimental data indicating that at service loads this procedure gives satisfactory results. This approach gives reasonably correct values for beams which are not too shallow and are not too severely cracked. However, with the use of shallower beams and high strength steels, accompanied by higher working stresses and greater cracking, this approach underestimates the deflections.

In 1960, Yu and Winter (4) proposed two methods which could be used for calculating short-time deflections:

Method A. The cracked transformed moment of inertia at midspan is

used as a constant value throughout the length of the span for simple spans, and the average moment of inertia for the positive and negative moment regions is used for continuous beams.

This method is simply a restatement of Equation (2.1) which had been presented by Maney (7) 46 years before. The method does not consider in any way the gradual change in stiffness that occurs as the moment along the span changes.

Method B. To take into account the participation of the tensile concrete between the cracks, the short-time deflections computed by Method A are multiplied by the following correction factor:

$$(1 - b' \frac{M_1}{M_{max}}) \tag{2.8}$$

in which M_{max} is the moment under working loads and M_I is defined as

$$M_1 = 0.1(f'_c)^{2/3} d(d - kd) \tag{2.9}$$

b' is the width of the section in the tension side.

The derivation of Equations (2.8) and (2.9) followed an elastic theory approach with the factor 0.1 having been determined empirically. The moment M_{max} was a pure bending moment in the derivation, and the factor 0.1 was determined on the basis that M_{max} is the maximum moment in the span for the beams tested. Method B is applied directly to deflection calculations with the use of the following effective moment of inertia in the same way that the cracked, transformed section moment of inertia is used in Method A:

$$I_{eff} = \frac{I_{tc}}{(1 - b' \frac{M_1}{M_{max}})} \qquad (2.10)$$

Comparisons with test data indicated that Method B provides somewhat better results than Method A.

In 1961 the European Concrete Committee (CEB) (12) recommended that deflection be computed in two parts as shown in Figure 2.

Part 1

M_I = moment producing first cracking (see Equation (2.7)).

$$K_I = E_c I_g \qquad (2.11)$$

where $E_c = 1800 \sqrt{R}$, kg. per square centimeter which, when converted to cylinder strength in psi, becomes $E_c = 73{,}500 \sqrt{f'c}$ psi. Δ_I is obtained by using M_I and K_I.

Part 2

$$M_{II} = M - M_I$$

where, M is the moment corresponding to the total load.

$$K_{II} = E_s A_s d^2 (1 - 2q)(1 - \tfrac{2}{3}q) \qquad (2.12)$$

which is an equivalent elastic flexural rigidity for a cracked section, see Equation (2.3), but determined by replacing (1 - k) and j with their

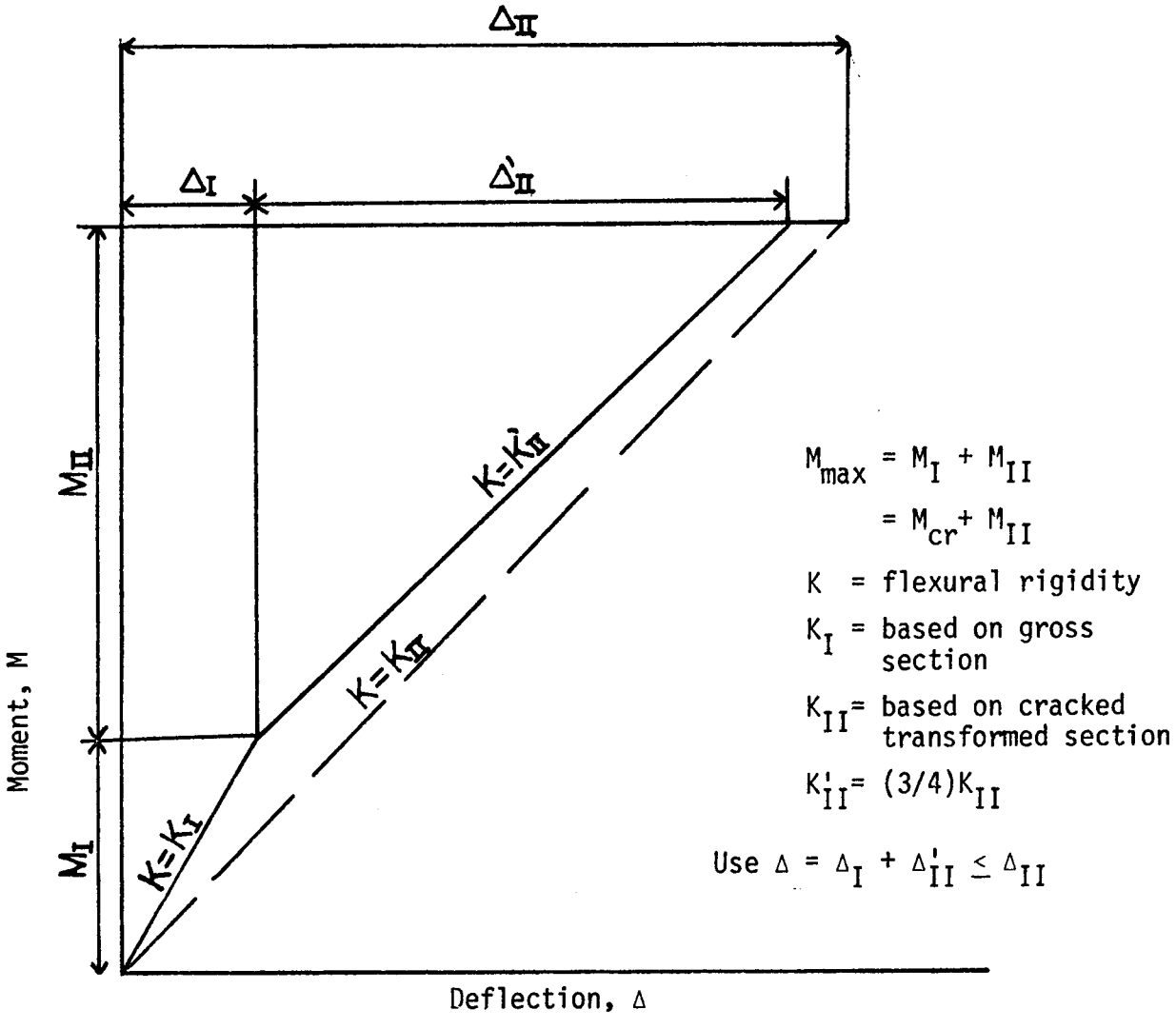

Figure 2. European Concrete Committee Recommended Procedures for Calculating Short-Time Deflection

approximate equivalents in strength notation of $(1 - 2q)$ and $(1 - \frac{2}{3}q)$, respectively.

Δ_{II} is obtained using M and K_{II}.

$$K'_{II} = 0.75\ K_{II} \tag{2.13}$$

Δ'_{II} is obtained using M and K'_{II}.

Solution

$$\Delta = \Delta_I + \Delta'_{II} \leq \Delta_{II} \tag{2.14}$$

Although this approach is obviously empirical, it is an attempt to consider loading stages. It does not consider in any way the variation in flexural rigidity along the beam. No special reference is made to continuous beams in the CEB report.

The ACI Approach

The 1963 ACI Code (13), Section 909, specified that, where short-time deflections are to be computed, the moment of inertia should be based on the gross section when ρf_y is equal to or less than 500 and on the cracked transformed section when ρf_y is greater. This was an attempt to guard against underestimating deflections (using gross Section I) for heavily reinforced beams associated with ρf_y values above 500. For continuous spans the ACI 318-63 code stated that the moment of inertia may be taken as the average of the values obtained for the positive and

negative moment regions.

The ACI 318-71 code, which is the one in effect, has presented the following equation for the moment of inertia:

$$I_{eff} = \left(\frac{M_{cr}}{M_s}\right)^3 I_g + \left[1 - \left(\frac{M_{cr}}{M_s}\right)^3\right] I_{tc} \qquad (2.15)$$

This equation applies only when M_s is greater than or equal to M_{cr}; otherwise, $I_{eff} = I_g$.

A description of the parameters and background of Equation (2.15) was presented in Chapter I of this thesis.

CHAPTER III

GENERAL METHOD FOR CALCULATING DEFLECTIONS

I. CALCULATION OF DEFORMATIONS FROM CURVATURES

The rotation and deflection of a member may be calculated by integrating the curvatures along the member. Since the curvature is defined as the rotation per unit length of member, the rotation between any two points A and B is given by

$$\theta_{AB} = \int_A^B \phi \, dx \tag{3.1}$$

where dx is an element of length of the member.

Figure 3 shows a cantilever with deformation due to rotation $d\phi$ over the element of length dx only. The rotation $d\theta$ is equal to ϕ dx, where ϕ is the curvature of the dx element. The transverse deflection $d\Delta$ at point A from the tangent to the axis of the member at the fixed end B, due to rotation $d\theta$ between the ends of the element, is x $d\theta$ or x ϕ dx. Hence, the vertical deflection of point A from the tangent to the axis of the member at point B due to curvature along the whole length of the member between those points is given by

$$\Delta_{A/B} = \int_A^B x \, \phi \, dx \tag{3.2}$$

where x is the distance of element dx from A.

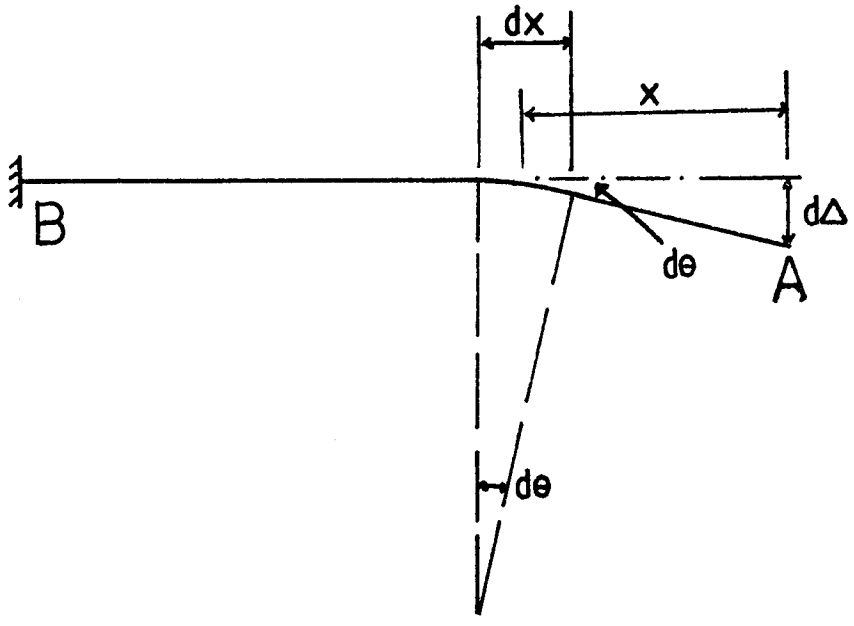

Figure 3. Deflection Due to Flexural Deformation of an Element

Equations 3.1 and 3.2 are generalizations of the moment-area theorems, and they apply whether elastic or inelastic curvatures are involved. These two equations may be used to calculate the rotations and deflections of members when one knows the moment-curvature relationship for each section.

II. MOMEMT CURVATURE RELATIONSHIPS

Curvature of a Section

Figure 4 shows the distribution of stress and strain in a section of a reinforced concrete member subjected to moment. The neutral axis depth is kd, the concrete strain in the extreme compression fiber is ε_c, and the tension steel strain is ε_s. The gradient of the strain profile is the curvature (ϕ), and from Figure 4 it is evident that it is given by

$$\phi = \frac{\varepsilon_c}{kd} \quad \text{or} \quad \phi = \frac{\varepsilon_s}{(d - kd)} \tag{3.3}$$

From the strain diagram for the beam cross-section and the stress-strain curves for the given concrete and steel, the stress diagram shown in Figure 4 may be readily computed. The internal couple, which must be equal to the applied moment at that section, is given by

$$M = T\ jd \quad \text{or} \quad M = C\ jd \tag{3.4}$$

where jd is the moment arm of the internal couple. These two values, namely M and ϕ, define one point on the M-ϕ curve for that section.

It should be noted that Equation (3.4) is only valid for the cases where there are no applied axial forces, because only then is T = C. Since

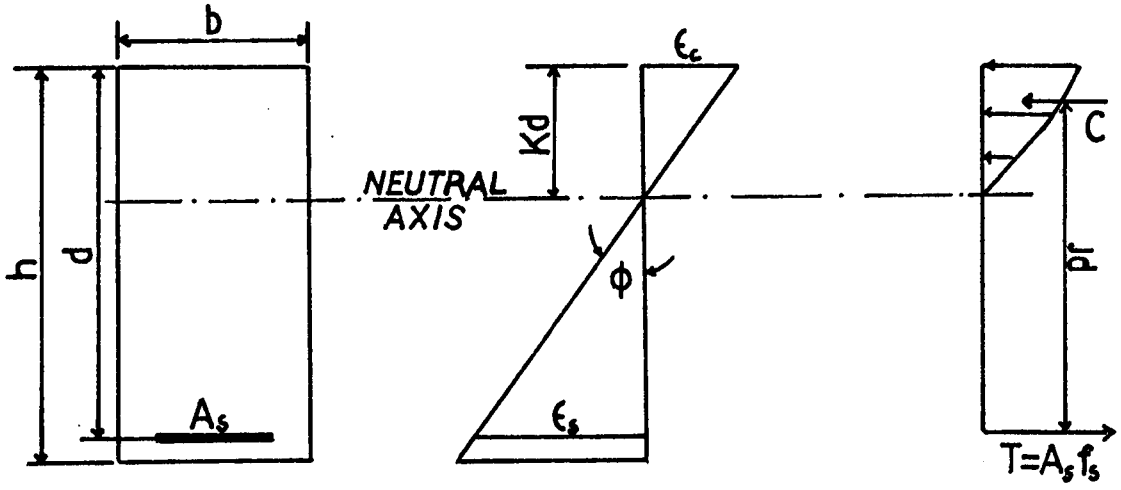

Figure 4. Stress-Strain Distribution in a Section of a Flexural Member

this thesis is concerned with the deflection of beams due to transverse loading, the axial forces will be assumed zero unless otherwise specified.

III. SIGNIFICANT POINTS ON THE M-ϕ CURVE

The M-ϕ curve for a typically reinforced cross-section illustrates three distinctly different stages of behavior as shown in Figure 5. The first stage corresponds to an uncracked section, and the M-ϕ curve is essentially linear. The appearance of the first hairline crack introduces the second stage, which starts at (M_{cr}, ϕ_{cr}). The third stage begins at yielding of the tension steel and ends when the useful limit of strain is reached in the extreme fiber of the compressed concrete (14).

Since deflections are calcualted at service loads (unless computed for calculations of ductility), the moments along the beam are always smaller than the yield moment, M_y. Thus, for the purpose of this thesis, calculation of the third stage of the M-ϕ curve is unnecessary, and the M-ϕ curve for a reinforced concrete section may be reduced to two stages as shown in Figure 6. The coordinates of the significant points at M_{cr} and M_y can be determined as explained in the following paragraphs.

First Cracking of Concrete

The concrete begins to crack when the most strained fiber in the tension zone of the section reaches the maximum tensile strain that the concrete can sustain without cracking. This situation is illustrated in Figure 7.

The value of ε_{cr} is given by

$$\varepsilon_{cr} = \frac{f_{cr}}{E_c} \tag{3.5}$$

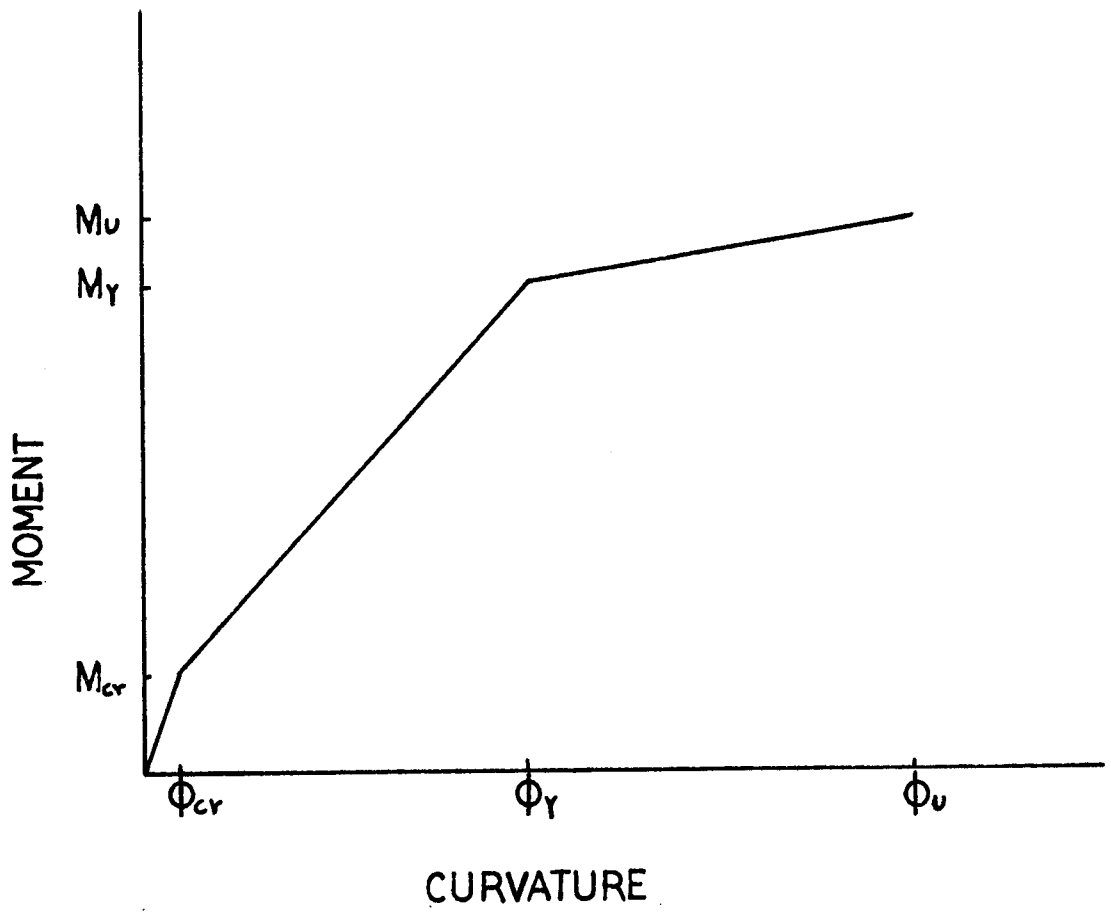

Figure 5. M-ϕ Curve for a Typically Reinforced Concrete Section

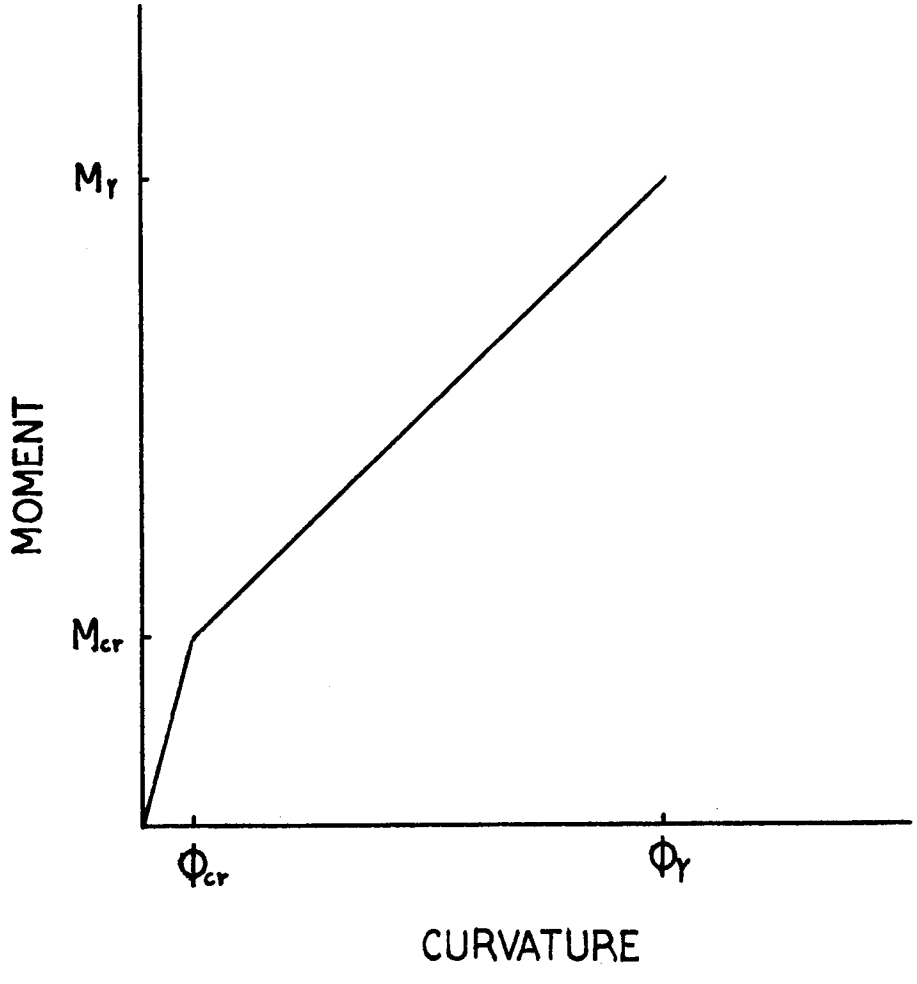

Figure 6. Section of M-ϕ Curve Required for Deflection Calculations

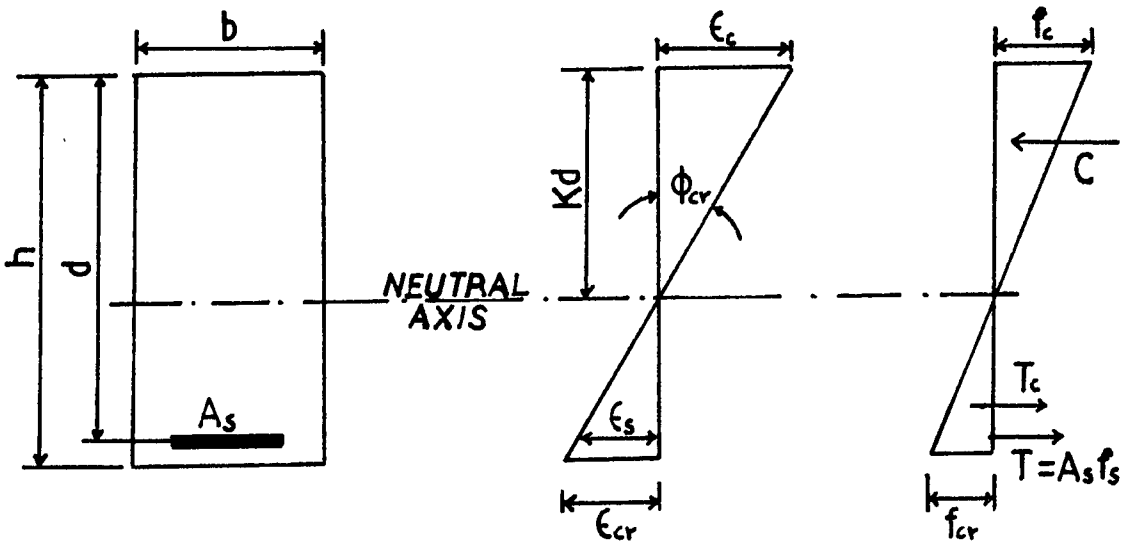

Figure 7. Stress and Strain Distribution in a Beam Cross-Section Just Before Cracking

where f_{cr} and E_c are defined by the ACI Code 318-71 (2) as

$$f_{cr} = 7.5\sqrt{f'_c} \quad \text{for normal weight concrete}$$

(See Section 9.5.2.2 of ACI-318-71 code for lightweight and sandlight-weight concrete.)

and

$$E_c = 57000\sqrt{f'c} \quad \text{for normal weight concrete}$$

or in general,

$$E_c = 33w^{1.5}\sqrt{f'c} \tag{3.5a}$$

From Figure 7 one can see that the cracking curvature ϕ_{cr} is given by

$$\phi_{cr} = \frac{\varepsilon_{cr}}{(h - kd)} \tag{3.6}$$

The position of the neutral axis, defined by kd, is at the point which will result in equilibrium of horizontal forces; that is, T = C.

The "exact" value of M_{cr} could be obtained from the stress diagram shown in Figure 7. In general, the procedure would involve the location of the neutral axis by trial and error and the summation of moments about an arbitrary axis. The reason that the neutral axis can only be "exactly" located by trial and error is the fact that the stress-strain curve for concrete is not precisely linear, either in the tension or in the compression region. If some compression steel is present, the exact location becomes

even more difficult since the internal forces become more sensitive to the neutral axis location. The assumption of a linear stress-strain curve for concrete, with a modulus of elasticity E_c as defined in Equation (3.5a), makes it possible to obtain the location of the neutral axis and, consequently, the value of the cracking moment without going to the time consuming trial and error procedure. The accuracy of the previous assumption is extremely good when the compressive stresses in the concrete are low as is typically the case at the onset of cracking. This assumption of elastic behavior leads to what is usually known as "the transformed section method." It is assumed that the reader is familiar with the transformed section concept; a detailed explanation of the subject may be found in almost every text of reinforced concrete fundamentals; for example, see Reference (15).

Once the uncracked, transformed moment of inertia is obtained, the cracking moment is simply given by

$$M_{cr} = \frac{f_{cr} I_{tu}}{(h - kd)} \tag{3.7}$$

where I_{tu} is the uncracked, transformed moment of inertia.

Yielding of the Tension Reinforcement

Two possible distributions of strain and stress at first yielding are shown in Figure 8. In this derivation it is assumed that the concrete carries no tension since the results would not change appreciably even if tension were considered. The strain in the steel is, by definition, the yield strain; therefore, the force in the tension steel is $A_s f_y$. The stress-strain curve for concrete is approximately linear up to

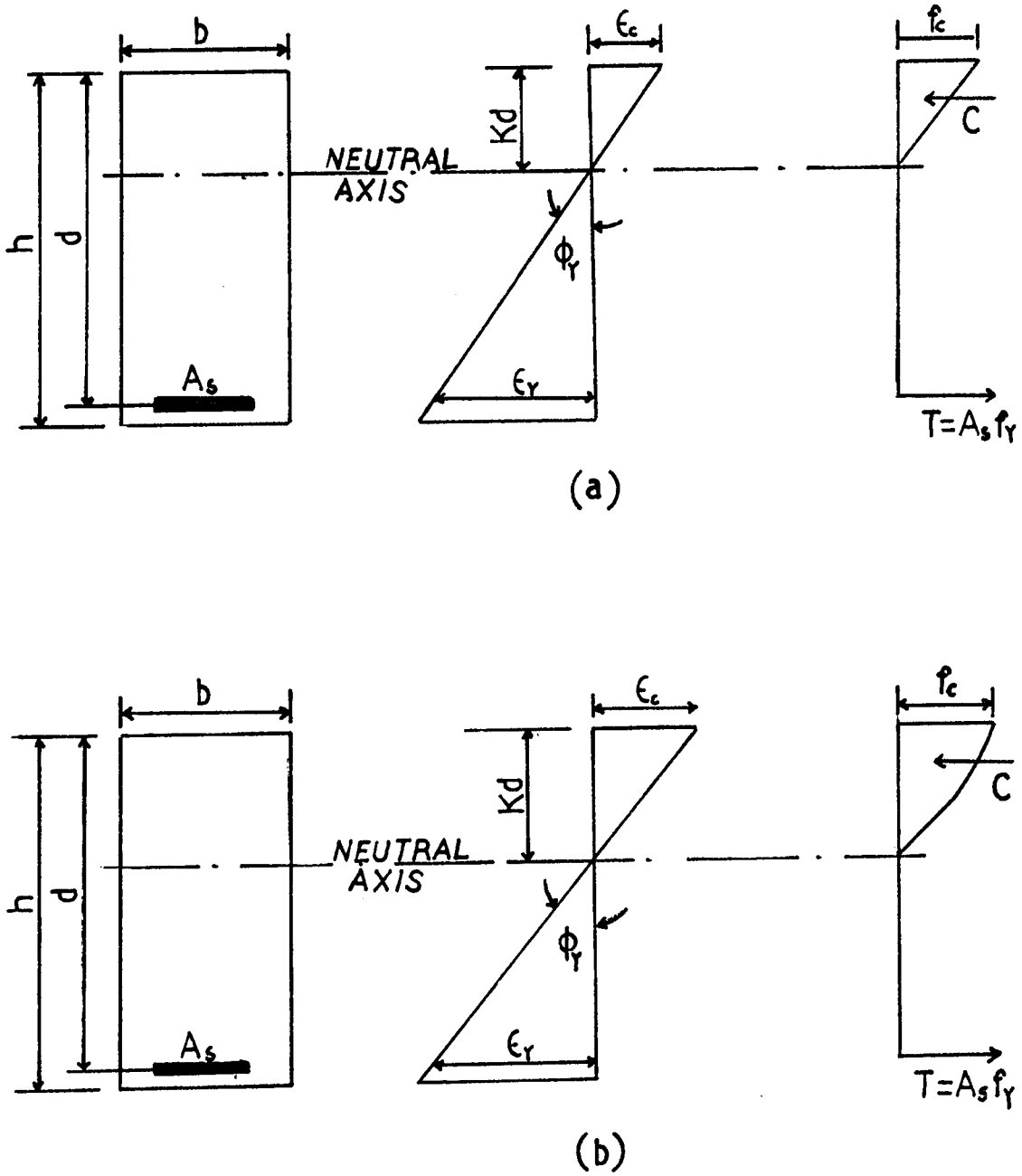

Figure 8. Distribution of Strain and Stress at Yielding: (a) When the Concrete Elastic Limit Is Not Exceeded and (b) Distribution When the Maximum Stress Exceeds the Elastic Limit

0.5 f'_c. Thus, a linear concrete stress distribution may be correctly assumed as long as the computed extreme fiber stress does not exceed approximately 0.5 f'_c (see Figure 8a). For this condition using elastic theory, the yield moment is given by

$$M_y = (\frac{f_y}{n})(\frac{I_{tc}}{d-kd}) \tag{3.8}$$

and the curvature at yielding is

$$\phi_y = \frac{\varepsilon_y}{(d - kd)} \tag{3.9}$$

where I_{tc} is the cracked section moment of inertia, and n and ε_y are given by

$$n = \frac{E_s}{E_c} \tag{3.10}$$

$$\varepsilon_y = \frac{f_y}{E_s} \tag{3.11}$$

From this point forward in this thesis, the value of E_s will be taken as 29000 ksi (ACI 318-71 8.3.2).

If the computed maximum compressive stress is larger than 0.5 f'_c the depth to the neutral axis will be greater than that obtained using the assumption of a linear stress diagram (see Figure 8b). This increased value of kd will make the curvature in this case greater than if computed on the basis of elastic behavior. In order to guard against underestimating the value of ϕ_y (overestimating the flexural rigidity), the slope of the M-ϕ curve after cracking should be defined based on the cracked

section moment of inertia and the bending moment that will make the concrete at the extreme ecompressive fiber reach the elastic limit in this thesis assumed to be 0.5 f'_c. This can be accomplished by simply defining M_e and ϕ_e as:

$$M_e = \frac{0.5\ f'_c\ I_{tc}}{kd} \tag{3.12}$$

$$\phi_e = \frac{0.5\ f'_c}{E_c\ kd} \tag{3.13}$$

and making the M-ϕ curve pass through this point, as it goes from M_{cr} to M_y.

From Figure 9 the value of ϕ_y consistent with the previous assumption is

$$\phi_y = \phi_e + \frac{(\phi_e - \phi_{cr})(M_y - M_e)}{(M_e - M_{cr})} \tag{3.14}$$

Since the value of M_y is, by definition, $A_{s*}f_{y*}$ (lever arm), the variation in M_y due to a change in the stress diagram is rather small. Without appreciable error the value of M_y can be taken as given by Equation (3.8) even in the cases where the maximum stress in the concrete exceeds 0.5 f'_c .

The value of ϕ_y given by Equation (3.14) is probably better than that from Equation (3.9) even in those cases where the maximum stress in the concrete is less than 0.5 f'_c. The reason is that for low values of f_y and relatively high values of f'_c, which are the necessary conditions for this case to occur, the assumption of a fully cracked section at the onset

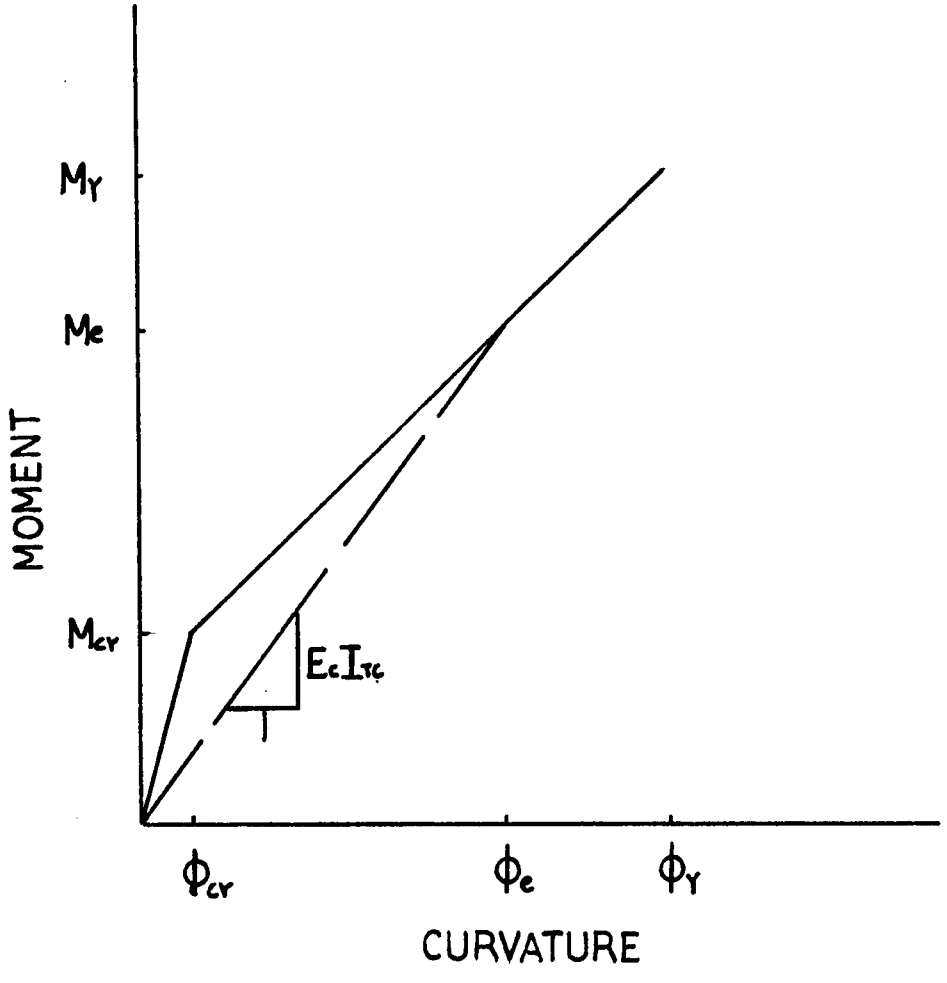

Figure 9. M-ϕ Curve for a Typically Reinforced Concrete Section

of yielding is too conservative, making the value of ϕ_y obtained from Equation (3.9) too high. In this thesis Equation (3.14) will be used to obtain ϕ_y in all cases.

Summary

The M-ϕ curve of interest for deflection calculations may be defined by two points with coordinates (M_{cr}, ϕ_{cr}) and (M_y, ϕ_y). The equations defining these coordinates have been derived and are repeated here for convenience.

$$\phi_{cr} = \frac{\varepsilon_{ct}}{(h - kd)} \tag{3.6}$$

$$M_{cr} = \frac{f_{cr} I_{tu}}{(h - kd)} \tag{3.7}$$

$$\phi_y = \phi_e + \frac{(\phi_e - \phi_{cr})(M_y - M_e)}{(M_e - M_{cr})} \tag{3.14}$$

$$M_y = \left(\frac{f_y}{n}\right)\left(\frac{I_{tc}}{d - kd}\right) \tag{3.8}$$

It should be noted that the value of kd is not the same at cracking and at yielding; although both are designated here by the same symbol, kd.

IV. THE ANALOGY OF ANGLE LOADS

The Conjugate Beam

It was shown in Section I of this Chapter that the deformations of a beam may be calculated by means of Equations (3.1) and (3.2) if the variation

of curvatures along the beam is known. In Sections II and III the procedure used to obtain the curvatures from the bending moments was also presented. It is now convenient to present these two equations (3.1) and (3.2) in a form that is much more useful to the structural engineer; that is, in terms of the conjugate beam method.

The two principles, previously defined as Equations (3.1) and (3.2), may be stated in conjugate beam terminology as follows:

(1) The slope at any section of a loaded beam, relative to the original axis of the beam, is equal to the shear in the conjugate beam at the corresponding section.

(2) The moment induced in the conjugate beam at every point by the curvatures considered as a load is numerically equal to the deflection in the real beam produced by the actual loads.

For a detailed treatment of the conjugate beam method see Reference (16).

At this point, a step by step enumeration of the method described in this Chapter will help to bring all the ideas together.

V. THE GENERAL METHOD, AS IT APPLIES TO REINFORCED CONCRETE BEAMS, STEP BY STEP

At the time when the designer is faced with the task of computing the deflection of a beam, the beam dimensions, span and reinforcement are known. The procedure from there on may be stated as follows:

(1) Determine the load arrangement that will be used to calculate the deflection. Usually the loading pattern producing maximum positive moment will also lead to maximum deflection.

(2) Calculate the moment diagram that corresponds to Step 1.

(3) Obtain M_{cr}, ϕ_{cr}, M_y and ϕ_y for the given beam, and define the M-ϕ curve. If the reinforcement changes along the beam then as many M-ϕ curves are needed as there are different sections. However, it is not practical to take into account every small change in steel along the beam span because the procedure becomes too lengthy, and the accuracy is not improved enough to justify the additional effort. It is the designer's judgment that will determine where a variation in steel or cross-section is important and should be considered. If one has some understanding of the behavior of the beam under load, this is usually not a difficult decision.

(4) Using the moments obtained in Step 2, determine the correapond-ing curvatures along the span from the M-ϕ curves of Step .

(5) Place these curvatures as loads on the conjugate beam, and calculate a new set of moments.

(6) The moments obtained in Step 5 are numerically equal to the deflections along the beam.

VI. A NUMERICAL EXAMPLE IN DETAIL

GIVEN: The beam shown in Figure 10.

REQUIRED: Obtain the maximum immediate deflection, due only to the 20^k load. (Since this example is presented for illustration, the beam weight has been neglected to keep the procedure as clear as possible. This is rarely possible in a practical case.) For simplicity, also, the same amount of steel has been used throughout the beam.

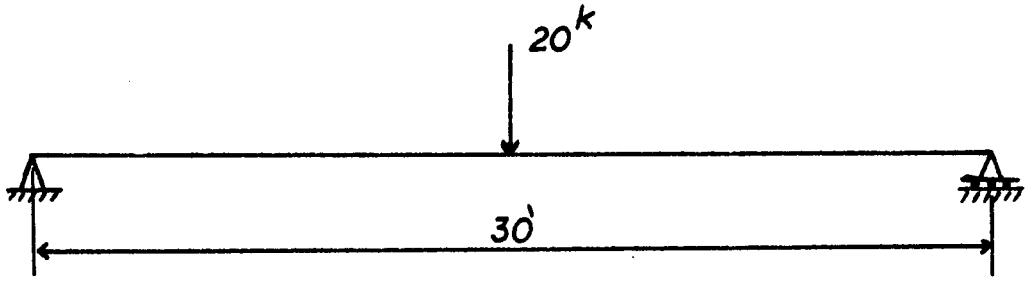

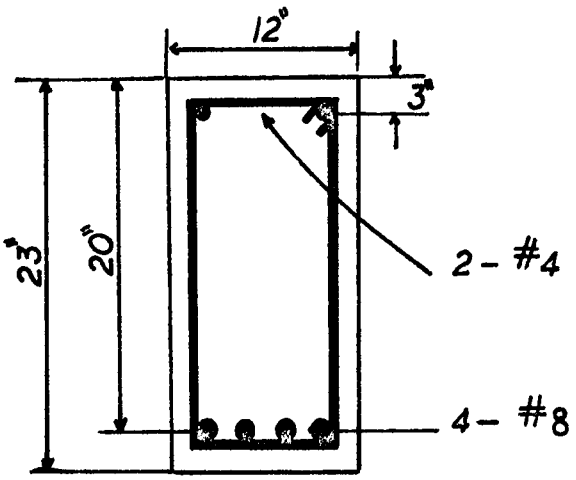

Figure 10. Beam for Example of the Use of the General Method

(1) Calculate the moment diagram

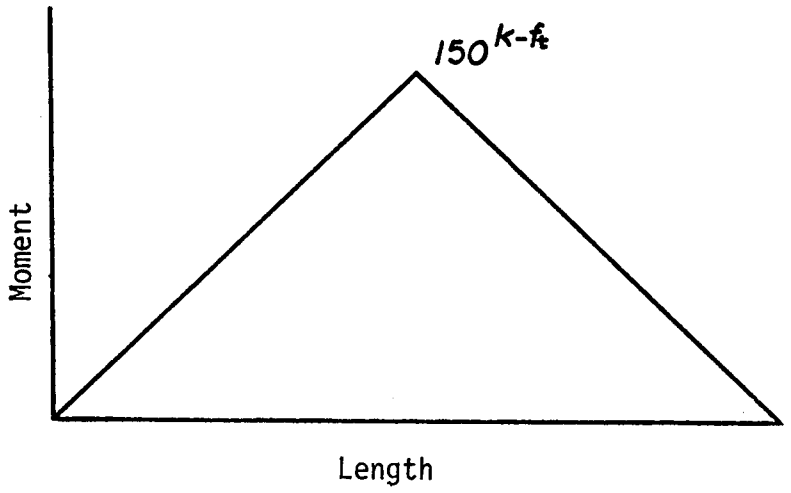

(2) Obtain M_{cr}, ϕ_{cr}, M_y and ϕ_y

Determination of I_{tu} $E_c = 57000\sqrt{f'_c} = 3605$ ksi

Then $n = \frac{29000}{3605} = 8$

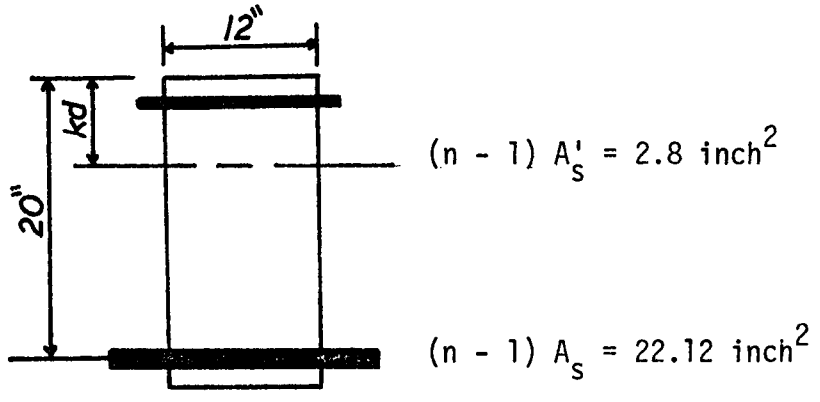

Location of N.A.

$$\frac{12 \times (kd)^2}{2} + 2.8(kd-3) = 22.12\ (20-kd) + \frac{(23-kd)^2}{2} \times 12$$

$$6kd^2 + 2.8\ kd - 8.4 = 442.4 - 22.12kd + 3174 - 276kd + 6kd^2$$

$$300.92\ kd = 3624.8 \qquad \therefore\ \underline{kd = 12.05 \text{ inch}}$$

Then,

$$I_{tu} = \frac{1}{3} \times 12 \times (12.05)^3 + 2.8(9.05)^2 + \frac{1}{3} \times 12 \times (10.95)^3$$

$$+ 22.12 \times (7.95)^2 = \underline{13{,}878 \text{ inch}^4}$$

$$f_{cr} = 7.5\sqrt{4000} = 474 \text{ psi}$$

From Equation (3.5)

$$\varepsilon_{cr} = \frac{474}{3605} = 0.0001374$$

From Equation (3.6) and (3.7)

$$\phi_{cr} = \frac{0.0001374}{10.95} = \underline{1.255 \times 10^{-5} \text{ inch}^{-1}}$$

and

$$M_{cr} = \frac{0.474 \times 13878}{(23 - 12.05)12} = \underline{50.06 \text{ k-ft}}$$

Determination of I_{tc}

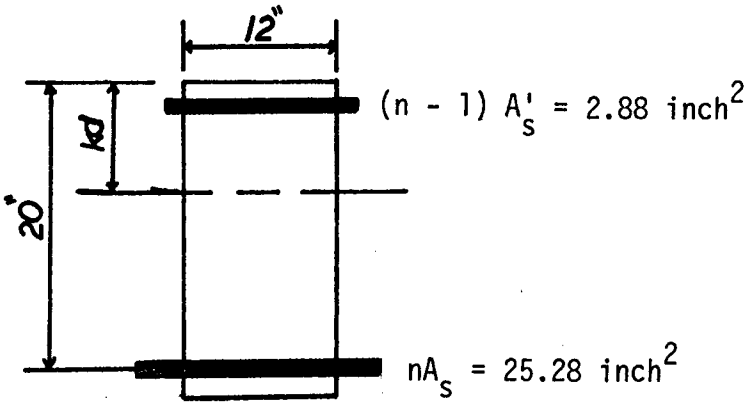

Location of N.A.

$$\frac{12(kd)^2}{2} + 2.88(kd-3) = 25.28(20-kd)$$

$$6kd^2 + 2.88kd - 8.4 = 505.6 - 25.28kd$$

$$kd^2 + 4.693kd - 85.67 = 0$$

$$\therefore \quad kd = 7.20 \text{ inch}$$

Then

$$I_{tc} = \frac{1}{3} 12 \times (7.20)^3 + 2.88(4.20)^2 + 25.28(12.80)^2 = \underline{5686 \text{ inch}^4}$$

From Equations (3.8), (3.12) and (3.13)

$$M_y = \frac{60 \times 5686}{8 \times 12.80 \times 12} = 277.62 \text{ k-ft}$$

$$M_e = \frac{0.5 \times 4 \times 5686}{7.2 \times 12} = 131.62 \text{ k-ft}$$

$$\phi_e = \frac{0.5 \times 4}{3605 \times 7.20} = 7.70 \times 10^{-5} \text{ inch}^{-1}$$

Then

$$\phi_y = 7.70 \times 10^{-5} + \frac{(7.70 - 1.255)\ 10^{-5} \times (277.62 - 131.62)}{(131.62 - 50.06)}$$

$$= 19.25 \times 10^{-5} \text{ inch}^{-1}$$

$$\phi_y = 19.25 \times 10^{-5} \text{ inch}^{-1}$$

These calculations completely define the required section of the M-ϕ curve as shown on the following page.

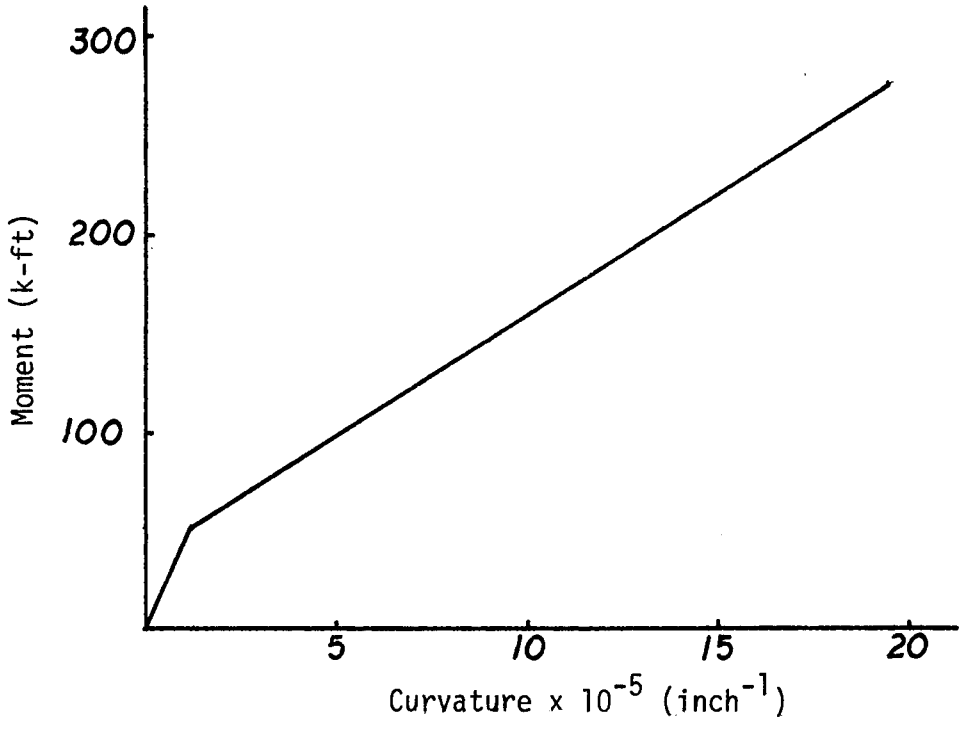

(3) Calculate the curvatures along the span and calculate Δ.

From the moment diagram calculated in Step 1 and the M-ϕ curve calculated in Step 2, the curvatures may be easily plotted along the span.

(a) Location of ϕ_{cr}

$$\frac{150}{15} = \frac{50.06}{x}$$

$$x = 5.006 \text{ ft}$$

(b) Maximum ϕ at midspan

$$\phi_{max} = 1.255 + \frac{(150 - 50.06) \times (19.25 - 1.255)}{(277.62 - 50.06)} = 9.16 \times 10^{-5} \text{ inch}^{-1}$$

The Conjugate Beam

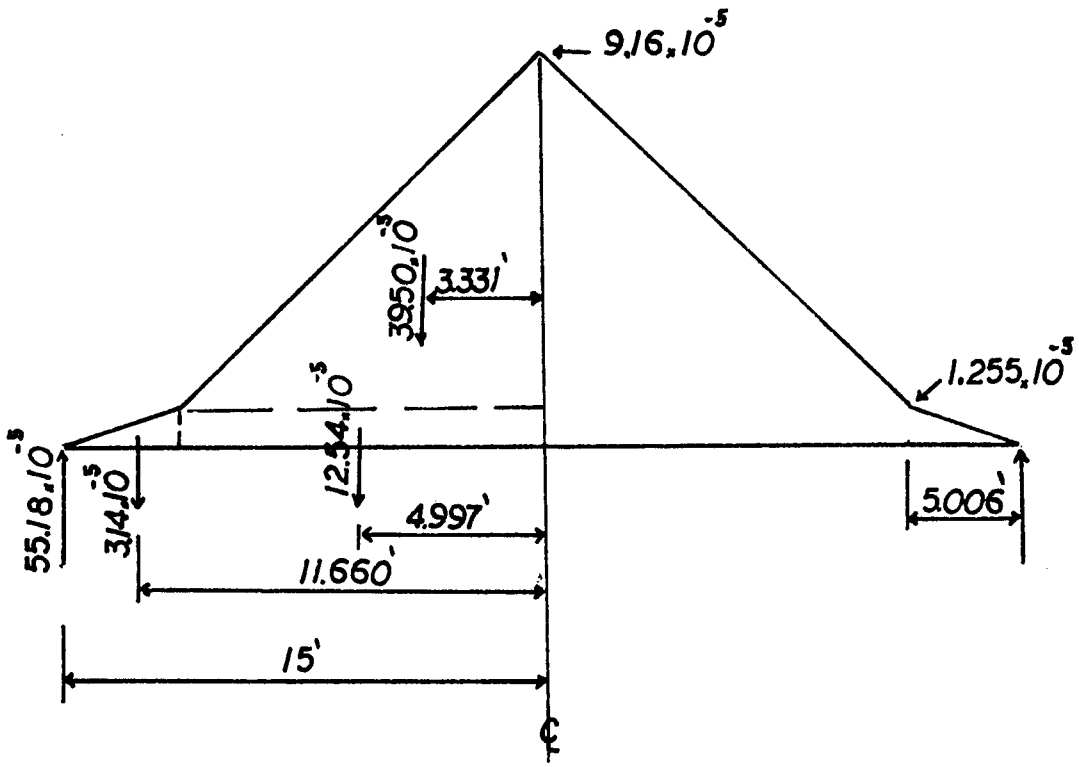

Note: The loading on the conjugate beam is symmetrical about the ℄ span. Now, using the second principle of the conjugate beam method, the deflection at midspan (maximum) is simply

$$\Delta = 144 \times 10^{-5}(55.18 \times 15 - 3.14 \times 11.66 - 12.54 \times 4.997 - 39.50 \times 3.331) = \underline{0.859 \text{ inch}}$$

VII. ADDITIONAL EFFECTS ON THE DEFORMATIONS OF MEMBERS CALCULATED FROM CURVATURES

Effect of Concrete Tension Between Flexural Cracks

That part of the M-ϕ curve from the point where the concrete begins

to crack to the yielding of the reinforcement was derived in Section III on the assumption that the section was located at one of the cracks in the member. Actually, the cracks occur at discrete intervals along the member, and it is only at these sections that the derived M-ϕ relationships strictly apply. The magnitude and distribution of the bond stresses between the cracks determine the distribution of the tensile stresses in the concrete and steel between the cracks. Additional cracks can form between the initial cracks at higher moments if the tensile strength of the concrete is exceeded. The final crack spacing is reached when a tensile force of sufficient magnitude to form an additional crack between two existing cracks can no longer be transferred by bond from the steel to the concrete. The effect of having a full section between cracks should not be misinterpreted by thinking that the rigidity at these sections is that of the uncracked, transformed moment of inertia. The effective rigidity is much less, as illustrated by the concrete strain diagram in a region between two cracks as shown in Figure 11.

It can be seen that the strain diagram is not a straight, sloping line between the cracks; this implies that the assumption of equal strain in the steel and in the concrete surrounding it is not valid after first cracking of the concrete.

Since the strength of concrete in tension is just a small fraction of its compressive strength (roughly 10 percent), the depth to the neutral axis, kd, between cracks, as shown in Figure 11 is not significantly changed by the relatively small tension in the concrete. This implies that the rigidity, EI, which is given by $EI = \frac{M\ kd}{\epsilon_c}$ is also little changed (this expression comes from substituting Equation (3.3) into the classical

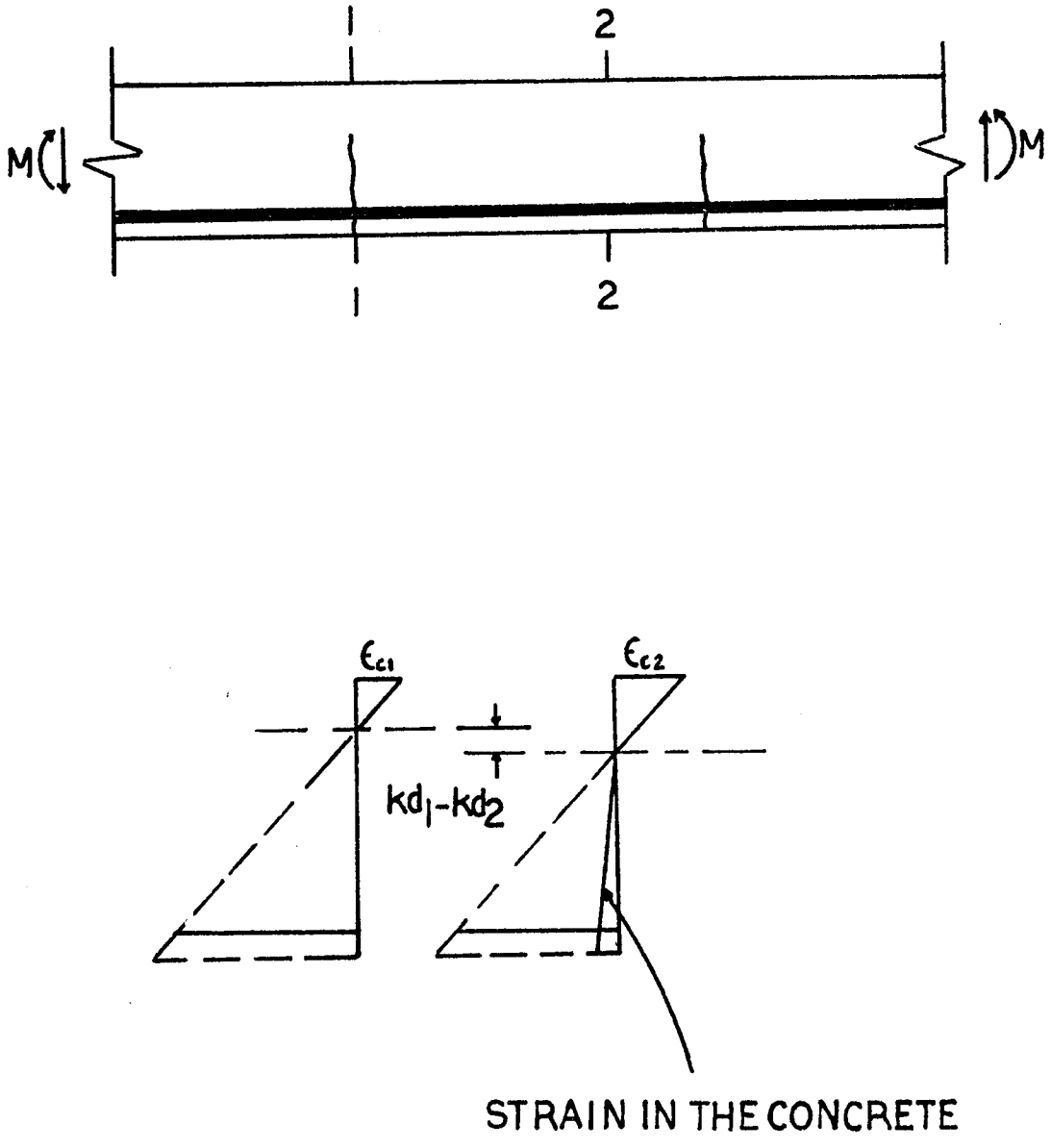

Figure 11. Strain Distribution at a Crack, Section 1, and in the Region Between Cracks, Section 2, in a Flexural Member

relationship $EI = \frac{M}{\phi}$); consequently, the calculated deflection, based on curvatures computed as if located at crack locations, is an accurate estimate of the "exact" theoretical value. Since the value of the flexural rigidity is slightly underestimated between the cracks, the final computed deflection using the general method should be "conservative"; that is, the computed deflection should be greater than the actual.

The author would like to point out that there appears to be a general misconception about the importance of the effect of concrete tension between flexural cracks in the calculation of deflections.

It has been the belief of a number of previous investigators, such as Park Paulay (1), Wei-Wen Yu and George Winter (4), and Dan E. Branson (3) that the calculation of deflections in flexural members based on moment-curvature relationships is difficult due to these tensile stresses between cracks. Actually, as will be shown in Chapter V, the key consideration is the determination of the depth of the cracks wherever they occur. This depth is what really determines the effective rigidity of the member; it is not, in the judgment of this writer, the relatively small contribution of the concrete between the cracks as has been stated for some time. In Chapter V, some comparisons of measured deflections with the solutions obtained from the general method will help to prove this point.

Effect of Diagonal Tension Cracks and Bond Slip

The determination of deflections by integrating the curvatures along members using Equations (3.1) and (3.2) ignores the effect on the deformations of possible diagonal tension cracks due to shear force and

of bond slip in anchorage zones. In a properly designed beam the contribution of shear and bond slip to the final deflection is negligible. Since this thesis is concerned with the calculation of deflections directly from the bending moment diagram and the moment curvature relationships, the subject will not be discussed further herein.

CHAPTER IV

SIMPLIFIED PROCEDURES TO CALCULATE IMMEDIATE DEFLECTIONS IN MEMBERS OF REINFORCED CONCRETE

It was shown in Chapter III that the immediate deflection of a reinforced concrete beam may be accurately calculated by integrating the curvatures along the span. Unfortunately, this is not a very practical way to approach the problem because the amount of calculations required for the method becomes prohibitive except in the most simple cases. Lengthy deflection calculations are not usually justified since determination of deflections is, more often than not, a matter of checking a member which has been previously designed by strength considerations.

In the simplified methods, immediate deflections of reinforced concrete beams are calculated as if the beam were a member made of a homogeneous and elastic material, to which the following two equations of strength of materials were applicable (17).

$$\frac{d^2y}{dx^2} = \frac{M}{EI} \tag{4.1}$$

$$y = \int\int \frac{M}{EI}\, dx \tag{4.2}$$

in which, x and y are the coordinates of any point along the neutral axis of the deflected beam, M is the bending moment along the span, and EI is the flexural rigidity of the beam cross-section.

Under this hypothesis, it is no longer necessary to calculate the magnitude and distribution of curvatures along the element.

The modulus of elasticity of concrete, E_c, is a rather elusive material property, not subject to analytical considerations. The equation proposed by the ACI 318-71 Code (2), presented in this thesis as Equation (3.5a), is probably the most widely accepted value for the modulus of elasticity of concrete.

With the value of E_c fixed, the problem of applying Equations (4.1) and (4.2) is reduced to that of obtaining the value of I. The value of I that will make Equation (4.2) yield an answer identical to that obtained from the general method is defined as the effective moment of inertia, I_{eff}.

Actually, there is not a unique answer to what the effective moment of inertia of a reinforced concrete beam should be. This is true because, among other things, the effective moment of inertia is a function of the type of loading acting on the beam. It follows then that any rational derivation to obtain I_{eff}, is limited to cover only one type of loading. It is possible to derive a set of equations to cover the most common loading cases, but this is not practical. Furthermore, its usefulness would be much more limited than that which one is led to believe at first glance. This is so because, in the event of a beam loaded with a combination of the typical cases, the equations to obtain the effective moments of inertia for each case could not be applied independently and superposition used to obtain the final answer. If the equations were used independently, all the moments of inertia would be overestimated, making the computations "unconservative." The reason that a high value of I_{eff} would be obtained is apparent if one notices that any load could be broken into parts, such

that none of them independently would produce any cracking in a given beam. Obviously, the sum of the deflections caused by each part, calculated on the basis of an uncracked beam, is smaller than the actual deflection produced by the total load considered as a whole.

Although the effective moment of inertia of a beam as a whole is a function of the type of loading, the moment of inertia at a given section is only a function of the applied bending moment (and, of course the section properties). This fact leads to the possibility of deriving an equation that will predict the moment of inertia at a given section when the bending moment at that section is known. Such an expression can be applied by the designer of analyst at the section of maximum moment in a given beam to obtain a lower bound for the effective moment of inertia of the member as a whole.

In 1963, Branson (3) presented an expression similar to the one previously mentioned, except that it was not a derivation but merely an empirical equation based on some particular test results. Branson's expression is shown below:

$$I_s = \left(\frac{M_{cr}}{M_s}\right)^4 I_g + \left[1 - \left(\frac{M_{cr}}{M_s}\right)^4\right] I_{tc} \qquad (4.3)$$

where M_s is the applied bending moment at the given section, and I_g is the moment of inertia of the gross concrete section. M_{cr} and I_{tc} have been previously defined.

An analytical derivation, based on moment-curvature relationships, of the moment of inertia at a particular cross-section is presented in the following paragraphs.

II. THE MOMENT OF INERTIA AT A SECTION OF A REINFORCED CONCRETE MEMBER, GIVEN THE BENDING MOMENT (METHOD 1)

Some Basic Concepts

It was shown in Chapter III how to obtain the moment-curvature relationships for a given section of a reinforced concrete member. It was also shown that these moment-curvature relationships, up to the yielding of the tension steel, may be graphically represented by two straight lines in what is usually referred to as an M-ϕ curve.

Since the flexural rigidity of a section is given by EI, and the relationship, $\phi = \frac{M}{EI}$, is always applicable regardless of the amount of cracking, it is obvious that $\frac{M}{\phi}$, which is the slope of any line from the origin to any point in the M-ϕ curve, is numerically equivalent to the flexural rigidity, EI, of the section at that point. This is shown graphically in Figure 12.

It is evident from Figure 12 that the value of the flexural rigidity, EI, depends on the amount of cracking that has taken place in the given section. Up to the cracking moment, the slope of the previously defined line is simply a constant and equal to $E_c I_{tu}$, where I_{tu} is the moment of inertia of the transformed, uncracked section. After this point, the slope of the line progressively decreases as the applied bending moment increases from the cracking moment to the yield moment. It is important to notice that the value of the flexural rigidity at yielding of the tension steel is not necessarily that given by $E_c I_{tc}$. This is only true if the extreme compressive fiber in the concrete has not exceeded the elastic limit (in this thesis assumed to be 0.5 f'_c). When this is not

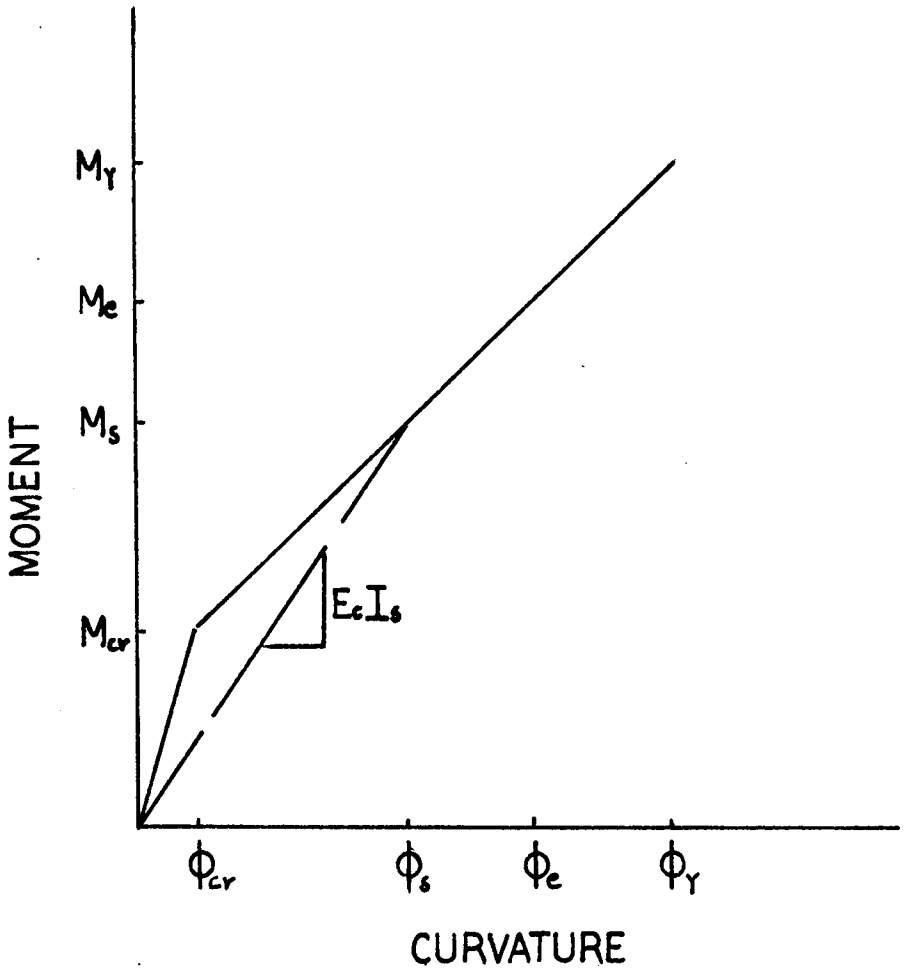

Figure 12. M-ϕ Curve for a Typically Reinforced Concrete Section

the case the value of the flexural rigidity is smaller than that given by the concrete modulus of elasticity and the cracked moment of inertia, $E_c I_{tc}$ (see discussion in Chapter III).

The difference between the two extreme values of the flexural rigidity, i.e., at cracking and at yielding, is usually large, particularly in members with low steel ratios. The derivation that follows will provide an equation to determine the value of the moment of inertia, I, as it changes from I_{tu}, at moments equal to or smaller than M_{cr}, to a minimum at the yield moment.

Derivation

All the parameters and variables that will be used in the following derivation are shown graphically in Figure 12, page 48. For clarity and convenience their definition are presented again.

M_{cr} = the section cracking moment.

M_e = bending moment that makes the concrete at the extreme compressive fiber reach the elastic limit, assumed here as $0.5\ f'_c$.

M_s = bending moment at which the flexural rigidity of the section is required.

ϕ_{cr} = the cracking curvature.

ϕ_e = the curvature occurring simultaneously with M_e.

ϕ_s = the curvature induced by M_s at the given section.

I_{tu} = the moment of inertia of the transformed, uncracked section.

I_{tc} = the moment of inertia of the transformed, cracked section.

I_s = the moment of inertia that corresponds to M_s. The determination of this parameter is the purpose of the following derivation.

It is known by definition that

$$\phi_s = \frac{M_s}{E_c I_s}$$

then

$$I_s = \frac{M_s}{E_c \phi_s} \tag{4.4}$$

From Figure 12 it can be seen that ϕ_s is given by

$$\phi_s = \phi_{cr} + \frac{(\phi_e - \phi_{cr})(M_s - M_{cr})}{(M_e - M_{cr})} \tag{4.5}$$

By appropriate substitutions into Equation (4.4) the following can be obtained:

$$I_s = \frac{(M_e - M_{cr})\, I_{tc} I_{tu}}{I_{tu} M_e (1 - \frac{M_{cr}}{M_s}) - I_{tc} M_{cr} (1 - \frac{M_e}{M_s})} \tag{4.6}$$

The detailed derivation of Equation (4.6) from Equation (4.4) is

shown in Appendix C.

The following substitutions will prove helpful in further symplifying the expression for I_s:

$$\alpha = \frac{M_s}{M_{cr}} \tag{4.7}$$

$$\gamma = \frac{M_s}{M_e} \tag{4.8}$$

Substituting Equations (4.7) and (4.8) into Equation (4.6) gives

$$I_s = \frac{(M_e - M_{cr})\, I_{tc} I_{tu}}{I_{tu} M_e (1 - \frac{1}{\alpha}) - I_{tc} M_{cr} (1 - \frac{1}{\gamma})} \tag{4.9}$$

With some rearranging (which is shown in Appendix C), Equation (4.9) may be written in its final form as:

$$I_s = \frac{I_{tc}}{\frac{1}{\alpha - \gamma} \left[(\alpha - 1) + (1 - \gamma) \frac{I_{tc}}{I_{tu}}\right]} \tag{4.10}$$

This equation for I_s can be easily checked at two points, namely, when M_s is equal to M_{cr} and when M_s is equal to M_e.

The solution for I_s when M_s is equal to M_{cr} is obviously, $I_s = I_{tu}$, since the beam is still an uncracked member.

If $M_s = M_{cr}$, then

$$\alpha = \frac{M_s}{M_{cr}} = 1$$

and so Equation (4.10) becomes

$$I_s = \frac{I_{tc}}{\frac{1}{1-\gamma}\left[0 + (1 - \gamma)\frac{I_{tc}}{I_{tu}}\right]} = \frac{I_{tc}}{\frac{(1-\gamma)}{(1-\gamma)}\frac{I_{tc}}{I_{tu}}} = I_{tu}$$

as it should be.

When $M_s = M_e$, the solution obtained from Equation (4.10) should be, $I_s = I_{cr}$, since it was at this bending moment that the transformed cracked section moment of inertia was defined.

If $M_s = M_e$

then,

$$\gamma = \frac{M_s}{M_e} = 1$$

and so Equation (4.10) becomes

$$I_s = \frac{I_{tc}}{\frac{1}{(\alpha-1)}\left[(\alpha - 1) + 0\right]} = I_{tc}$$

There are some very powerful features in Equation (4.10). Some of them will be listed as follows:

(1) Equation (4.10) is a perfectly general equation for the moment of inertia of a reinforced concrete section subjected to a bending moment. The equation is not limited to any particular cross-sectional shape, nor is it a function of the type of loading or boundary conditions.

(2) Only the assumptions made in obtaining the M-ϕ curve are inherent in Equation (4.10). Within the accuracy of these assumptions, the equation may be regarded as "exact."

(3) In the ultimate analysis of reinforced concrete frames, Equation (4.10), which can be easily programmed, may be used to represent the moment of inertia at each section of the flexural members. Since the distribution of moments is at all times a function of the relative rigidities, the variation of I as the load changes is of major concern.

A comparison between the "actual" curvature diagram and that predicted by the use of Equation (4.10) is shown in Figure 13 for three typically loaded simple beams. It is apparent from this figure that Equation (4.10), when evaluated at the section of maximum moment in a beam and used as the effective moment of inertia of the member as a whole, should predict deflections that are very close to those obtained using the general method. The examples in Chapter V will demonstrate this point.

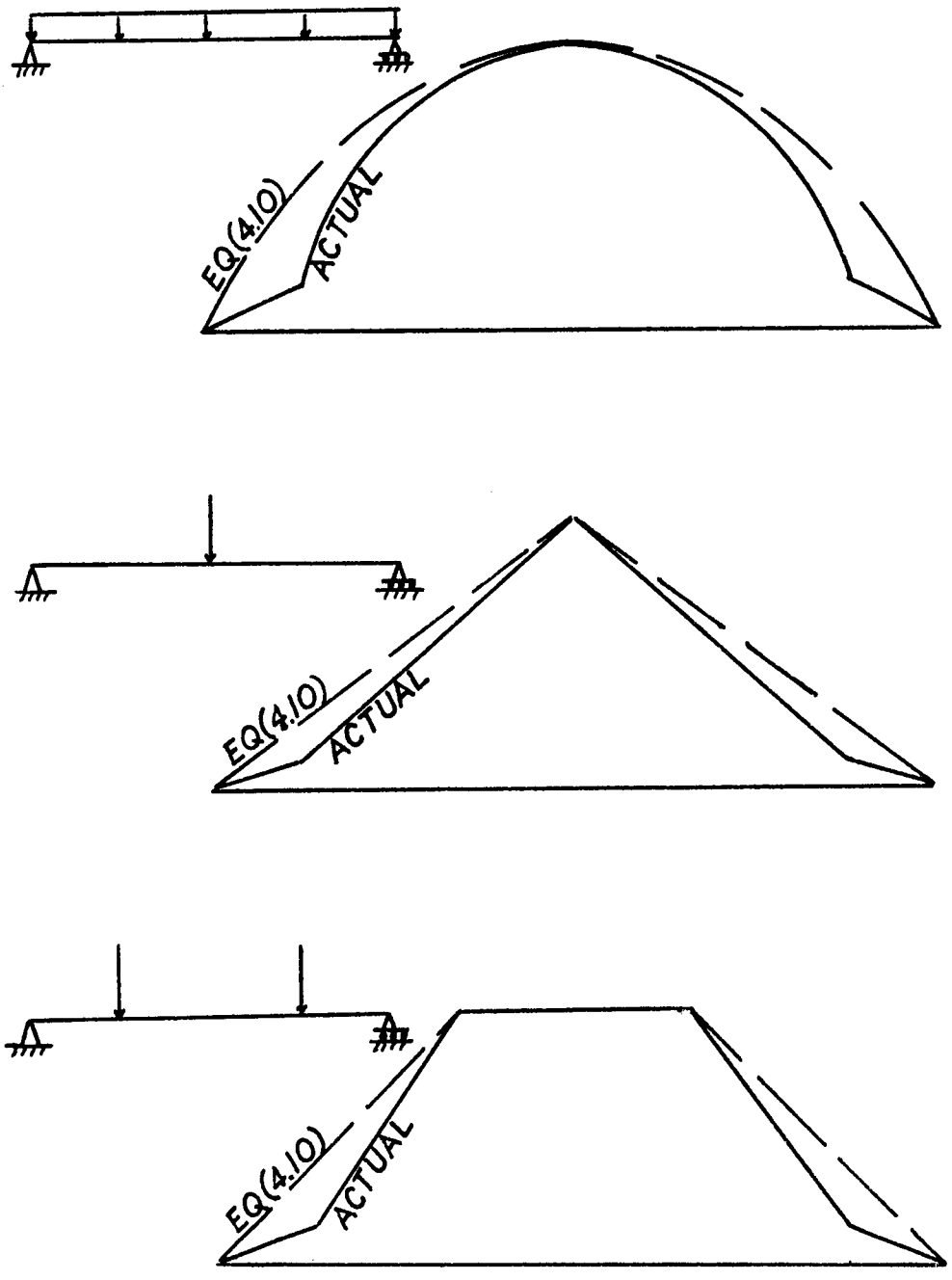

Figure 13. Distribution of Curvatures in Three Simply Supported Reinforced Concrete Beams

III. THE EFFECTIVE MOMENT OF INERTIA OF A SIMPLE BEAM WITH UNIFORM LOAD (METHOD 2)

The expression for the effective moment of inertia of reinforced concrete beams presented by the ACI 318-71 Code (2) was empirically determined from a set of tests on simple beams with uniform load. The reason that a uniform load was selected in the determination of the ACI empirical expression is because this type of loading occurs so often in reinforced concrete design. The condition of simple support, although not very common in practice, is practically a must in the loaboratory to keep the testing variables to a reasonable number. The expression proposed by ACI 318-71 was presented in Chapter I of this thesis and is repeated here for illustration.

$$I_{eff} = \left(\frac{M_{cr}}{M_s}\right)^3 I_g + \left[1 - \left(\frac{M_{cr}}{M_s}\right)^3\right] I_{tc} \qquad (4.11)$$

It was stated in Section I of this chapter that it is possible to obtain an equation for the effective moment of inertia of a beam if a particular load arrangement is selected for the derivation. What follows is the analytical derivation of the expression for the effective moment of inertia of a simple beam with uniform load.

Some Basic Concepts

Figure 14a shows a simply supported reinforced concrete beam having a span, L, and a uniform load, w, along its entire length. The intensity of the load, w, is such that the section at midspan is subjected to a

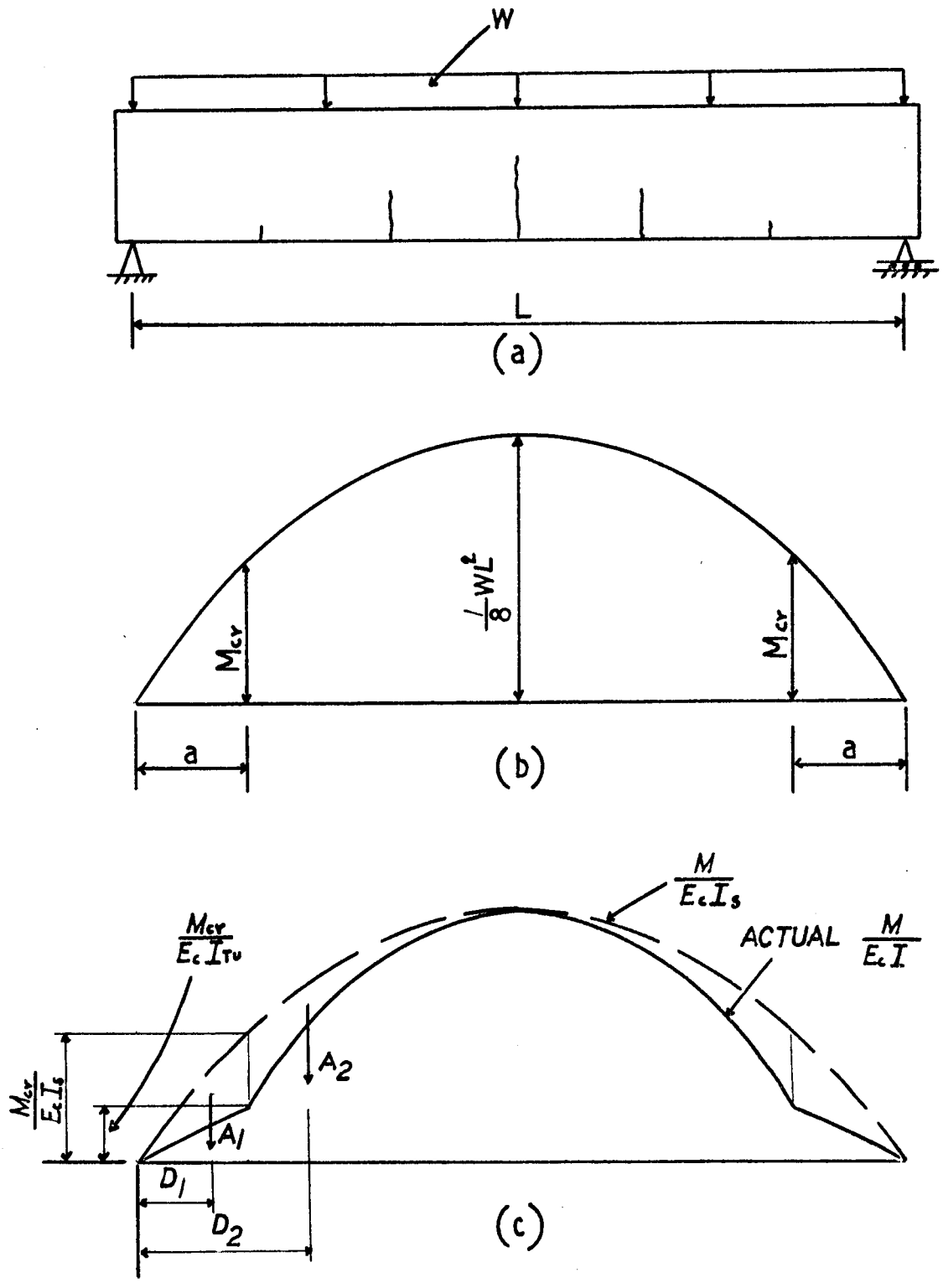

Figure 14. (a) Simple Beam with Uniform Load, (b) Moment Diagram and (c) Curvature Diagram

moment that lies somewhere between the cracking moment and the yield moment. The moment diagram in Figure 14b shows that, in two regions of the beam which are spread out a distance, a, from both supports, the moment has not reached the cracking moment. In these regions the beam has a fully uncracked section. In Figure 14c two diagrams are shown: the one shown with the unbroken line is the actual $\frac{M}{E_c I}$, or curvature diagram occurring at the given load, w; and the dashed line curve is a curvature diagram obtained assuming that the moment of inertia at midspan, I_s, which is given by Equation (4.10), is constant along the entire length of the beam.

The error introduced by the assumption of a constant I equal to I_s may be readily visualized from Figure 14c. Since both diagrams are curvature diagrams, the reader will notice that what Figure 14c shows is the load on the conjugate beam. Based on this idea, the deflection at midspan could be obtained by simply taking moments (including the conjugate beam reactions) about the center line. It is apparent from Figure 14c that the error introduced by the assumption of a constant I is equal to the first moment of the cross-hatched areas A_1 and A_2 (including their reactions) about the center line. The same result is obtained by taking the first moment of A_1 and A_2 about the left support.

The task is to evaluate this error in general and, with this known, establish an expression for the moment of inertia such that the traditional equation, $\Delta = \frac{5wL^4}{384\ E_c I}$, which is based on a uniform moment of inertia along the beam, will yield an answer identical, or at least very close, to that obtained from an integration of the actual curvatures as determined by the M-ϕ relationships.

Derivation

Following the ideas previously presented, it is obvious from Figure 14c that the deflection at midspan is given by:

$$\Delta = \frac{5wL^4}{384\ E_c I_s} - A_1 D_1 - A_2 D_2 \tag{4.12}$$

where I_s is the moment of inertia at midspan, given by Equation (4.10).

By definition of I_{eff}, Δ is also

$$\Delta = \frac{5wL^4}{384\ E_c I_{eff}} \tag{4.13}$$

Substituting Equation (4.13) into (4.12) gives

$$\frac{5wL^4}{384\ E_c I_{eff}} = \frac{5wL^4}{384\ E_c I_s} - A_1 D_1 - A_2 D_2 \tag{4.14}$$

or

$$\frac{1}{I_{eff}} = \frac{1}{I_s} - \left(\frac{384\ E_c}{5wL^4}\right)[A_1 D_1 + A_2 D_2] \tag{4.15}$$

The product $A_1\ D_1$ can be exactly determined from geometric considerations. The resulting expression is

$$A_1\ D_1 = \frac{wa^3 L}{E_c\ 6\ I_{mean}} - \frac{wa^4}{E_c\ 8\ I_{mean}} \tag{4.16}$$

where I_{mean} is defined as

$$I_{mean} = \frac{I_s I_{tu}}{I_{tu} - I_s} \tag{4.17}$$

The detailed derivation of (4.16) is shown in Appendix C.

The product A_2D_2 can be precisely calculated but the resulting expression is too long to be practical; however, a close estimate of this product can be obtained based on a triangular shape approximation. The resulting expression is:

$$A_2D_2 \cong \frac{5wa^4}{48 E_c I_{mean}} - \frac{7wa^3L}{48 E_c I_{mean}} + \frac{7wa^2L^2}{192 E_c I_{mean}} + \frac{waL^3}{192 E_c I_{mean}} \tag{4.18}$$

The derivation of Equation (4.18) is given in Appendix C.

Substituting Equations (4.16) and (4.18) into (4.15) gives:

$$\frac{1}{I_{eff}} = \frac{1}{I_s} - \frac{384}{5L^4 I_{mean}} \left[\frac{a^3L}{6} - \frac{a^4}{8} + \frac{5a^4}{48} - \frac{7a^3L}{48} + \frac{7a^2L^2}{192} + \frac{aL^3}{192} \right] \tag{4.19}$$

or

$$\frac{1}{I_{eff}} = \frac{1}{I_s} - \frac{1}{I_{mean}} \left[-\frac{8}{5} \left(\frac{a}{L}\right)^4 + \frac{8}{5} \left(\frac{a}{L}\right)^3 + \frac{14}{5} \left(\frac{a}{L}\right)^2 + \frac{2}{5} \left(\frac{a}{L}\right) \right] \tag{4.20}$$

Define a term, COEF, as follows

$$COEF = -\frac{8}{5}\left(\frac{a}{L}\right)^4 + \frac{8}{5}\left(\frac{a}{L}\right)^3 + \frac{14}{5}\left(\frac{a}{L}\right)^2 + \frac{2}{5}\left(\frac{a}{L}\right) \tag{4.21}$$

Then Equation (4.20) may be written as:

$$\frac{1}{I_{eff}} = \frac{1}{I_s} = \frac{COEF}{I_{mean}}$$

or,

$$I_{eff} = \frac{I_s}{1 - COEF \frac{I_s}{I_{mean}}} \tag{4.22}$$

Substituting (4.17) into (4.22) gives:

$$I_{eff} = \frac{I_s}{1 - COEF \frac{(I_{tu} - I_s)}{I_{tu}}} \tag{4.23}$$

which is in the desired form.

It is very important to notice that the term, COEF, is not a function of a or L independently but a function of $(\frac{a}{L})^n$. This implies that it is possible to tabulate or plot the value of the term, COEF, as a function of $\frac{a}{L}$. Having the value of the term, COEF, readily available, the use of Equation (4.13) is relatively simple.

Table 1 shows the value of the term, COEF, for the whole range of possible values of, $\frac{a}{L}$, namely from 0.0 to 0.5.

TABLE 1

COEF VERSUS $\frac{a}{L}$

a/L	COEF
0	0
0.05	0.027
0.10	0.069
0.15	0.128
0.20	0.202
0.25	0.294
0.30	0.402
0.35	0.528
0.40	0.669
0.45	0.827
0.50	1.000

Figure 15 is a plot of the values in Table 1. From this figure it is possible to interpolate.

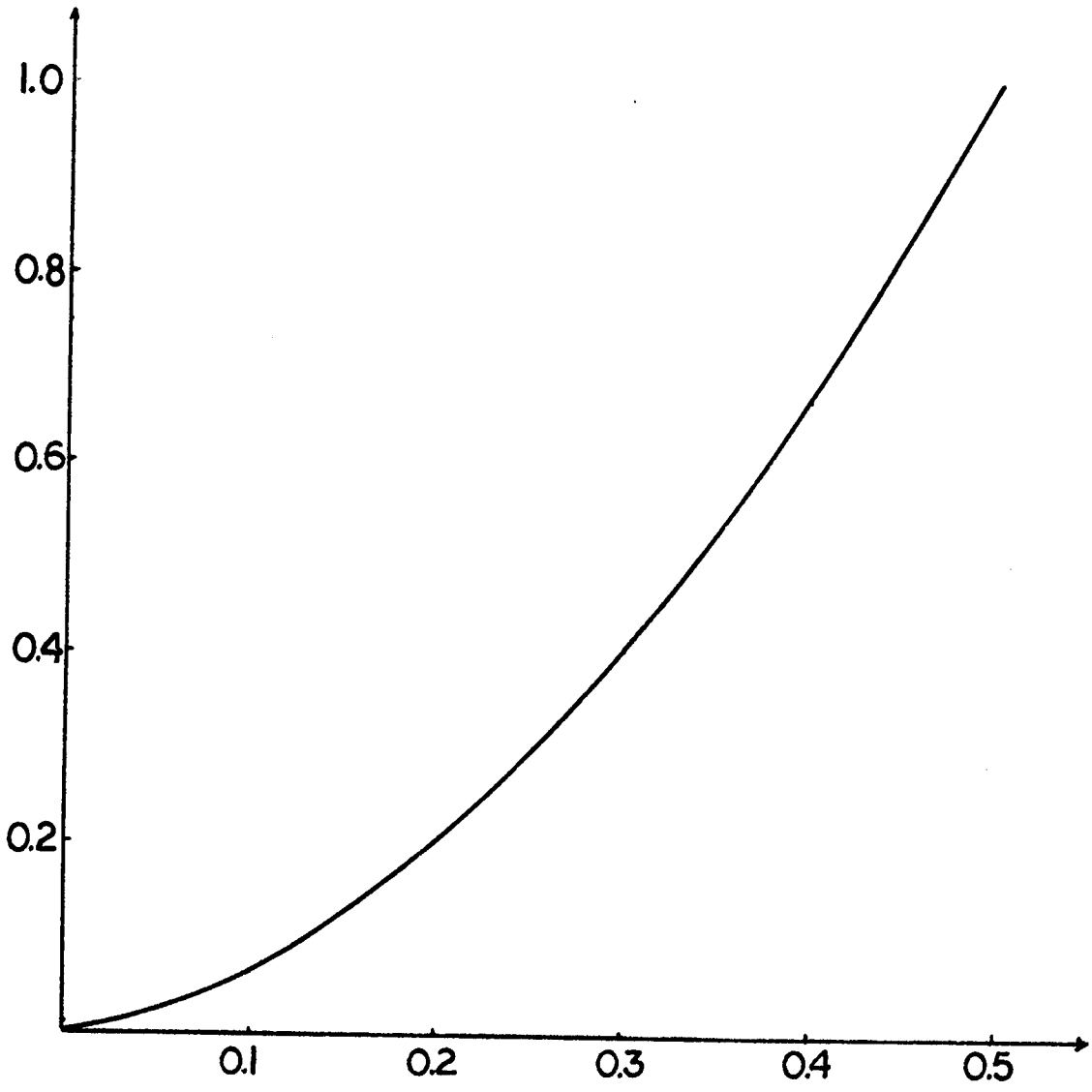

Figure 15. COEF Versus $\frac{a}{L}$ for Use in Equation (4.25)

CHAPTER V

THE SIMPLIFIED PROCEDURES: ILLUSTRATION AND COMPARISONS WITH ACI AND TEST DATA

The following is a numerical example illustrating the use of Methods 1 and 2 as presented in Chapter IV. For simplicity the same beam used in the example of Chapter III is used here. The load was changed to a uniform load to make Method 2 strictly applicable. The magnitude of the uniform load was selected such that the moment at midspan is the same as that in the example in Chapter III.

I. A NUMERICAL EXAMPLE ILLUSTRATING METHOD 1 AND METHOD 2

The problem may be stated as follows:

For the beam shown in Figure 16, it is desired to

(a) obtain the immediate deflection using Method 1, and

(b) refine this value by applying Method 2.

From the example in Chapter III the following parameters are known:

M_{cr} = 50.06 k-ft

M_e = 131.62 k-ft

I_{tu} = 13,878 in^4

I_{tc} = 5,686 in^4

E_c = 3,605 ksi

The uncracked length of beam can be calculated to be

a = 2.757 ft

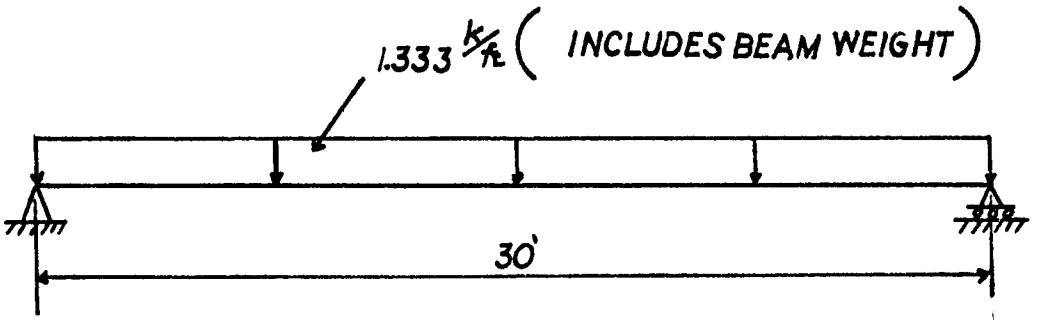

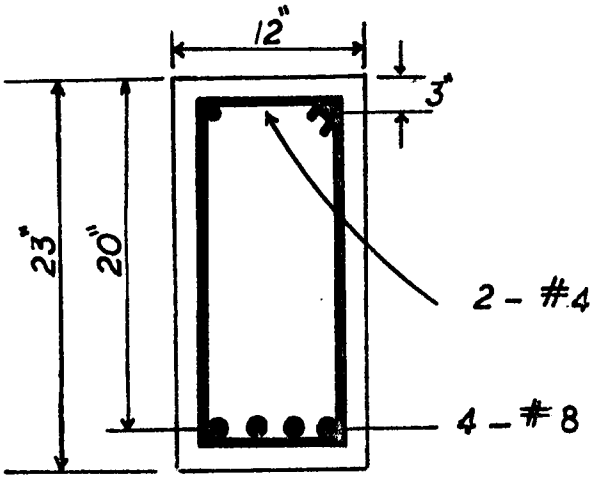

Figure 16. Beam for Example Illustrating the Use of Method 1 and Method 2

From Figure 16, the moment at midspan is

$$M_s = \frac{1}{8} wL^2 = 150 \text{ k-ft}$$

(a) Method 1

$$\Delta = \frac{5wL^4}{384 E_c I_s}$$

$$I_s = \frac{I_{tc}}{\frac{1}{(\alpha - \gamma)} [(\alpha - 1) + (1 - \gamma)\frac{I_{tc}}{I_{tu}}]}$$

From Equation (4.7) and (4.8),

$$\alpha = \frac{M_s}{M_{cr}} = 2.9964$$

and

$$\gamma = \frac{M_s}{M_e} = 1.1396$$

Then,

$$I_s = \frac{5686}{\frac{1}{(2.9964 - 1.1396)} [(2.9964 - 1) + (1 - 1.1396) \frac{5686}{13878}]} = 5444 \text{ in}^4$$

$$\Delta = \frac{5 \times 1.333 \times (30)^4 \times (12)^3}{384 \times 3605 \times 5444} = \underline{1.24 \text{ inch}}$$

(b) Method 2

$$\Delta = \frac{5wL^4}{384\ E_c\ I_{eff}}$$

$$I_{eff} = \frac{I_s}{1 - COEF\ \frac{(I_{tu} - I_s)}{I_{tu}}}$$

$$\frac{a}{L} = 0.0919$$

From Figure 16, page

$$\frac{a}{L} = 0.0919$$

COEF = 0.0615

Thus,

$$I_{eff} = \frac{5444}{1 - 0.0615\ \frac{(13878 - 5444)}{13878}} = 5655 \text{ inch}^4. \quad \text{Then,}$$

$$\Delta = \frac{5 \times 1.333 \times (30)^4 \times (12)^3}{384 \times 3605 \times 5655} = \underline{1.192 \text{ inch}}$$

The answer obtained from an integration of the curvatures along the span obtained from the computer program is presented here for illustration:

Δ (computer) = 1.169 inch.

II. COMPARISON WITH TEST RESULTS

It has been stated throughout this thesis that the immediate deflection of reinforced concrete beams can be accurately calculated from moment-curvature relationships. In Chapter III the general method to obtain deflections from M-ϕ relationships was presented, and two simplified procedures were developed in Chapter IV.

It is now desirable to compare deflections predicted using these methods to values obtained in actual tests. For this purpose ten test beams were selected in this section. All ten beams are simply supported and carry a uniform load along their full length. The first six beams, as shown in Tables 2, 3, and 4 are rectangular in cross-section and were selected from a set of tests carried out by Washa and Fluck (5). The last four beams presented are tee beams tested by Yu and Winter (4).

Table 2 has the cross-sectional dimensions and the details of reinforcement for each one of the beams. Table 3 shows the properties of the materials used, and some useful beam parameters. All the material properties shown in Table 3 are measured values at the time the tests were run with the exception of the modulus of rupture of the concrete in the case of the rectangular beams. This value was not measured in the tests made by Washa and Fluck; the value of $6.7\sqrt{f'_c}$ shown in Table 3 is just a reasonable assumed value for concrete having less than 28 days of curing (4). (These tests were run at a concrete age of 14 days.)

In Table 4 the immediate deflections computed using the methods

TABLE 2

DETAILS OF SELECTED BEAMS

Reference	Beam Description	Beam Designation	Span L (ft)	Section Details							
				b_w	b_f	t	d	d'	H	A_s	A_s'
Washa & Fluck	Simple Span Rectangular Beams	B-1	20.0	6	6	0	6.19	0.69	8	0.62	0.62
		B-2	20.0	6	6	0	6.19	0.69	8	0.62	0.31
		B-3	20.0	6	6	0	6.19	0	8	0.62	0
		C-1	20.8	12	12	0	4.00	1.00	5	0.80	0.80
		C-2	20.8	12	12	0	4.00	1.00	5	0.80	0.40
		C-3	20.8	12	12	0	4.00	0	5	0.80	0
Yu & Winter	Simple Span T-Beams	A	20.0	6	12	2.5	10.19	0	12	0.62	0
		B	20.0	6	12	2.5	10.19	1.56	12	0.62	0.31
		C	20.0	6	12	2.5	10.19	1.56	12	0.62	0.62
		F	20.0	6	12	2.0	6.19	0	8	0.62	0

TABLE 3

MATERIAL PROPERTIES AND BEAM PARAMETERS

Reference	Beam Description	Beam Designation	Concrete Strength f'_c (psi) (Measured)	Concrete Modulus of Elasticity E_c (ksi) (Measured)	Concrete Modulus of Rupture f_{cr} (psi) (Measured)	M_e	M_{cr}	I_{tc}	I_{tu}
Washa & Fluck	Simple Span Rectangular Beams	B-1	2720	2610	Not Available $6.7\sqrt{f'c}$ Assumed	5.85	2.34	130.57	323.35
		B-2	2720	2610		5.45	2.27	127.0	304.0
		B-3	2720	2610		4.99	2.20	123.07	282.59
		C-1	2720	2610		4.80	1.88	70.46	161.40
		C-2	2720	2610		4.55	1.83	68.65	151.79
		C-3	2720	2610		4.17	1.77	66.35	141.04
Yu & Winter	Simple Span T-Beams	A	3680	2560	403	24.62	6.75	470.64	1301.54
		B	3883	2510	386	27.47	6.60	483.88	1354.44
		C	3534	2500	397	26.16	6.89	490.56	1402.13
		F	4258	2620	444	12.51	3.33	151.76	390.41

TABLE 4

COMPUTED SHORT-TIME DEFLECTIONS AND COMPARISON WITH TEST RESULTS

Reference	Beam Description	Beam Designation	Uniform* Load ($\frac{k}{ft}$)	Measured Deflection (inch)	Theoretical Value Based on M-ϕ Curves**		Method 1 Equation (4.10)		Method 2 Equation (4.25)		ACI Code Equation (1.1)	
					DEFL (inch)	Ratio	DEFL (inch)	Ratio	DEFL (inch)	Ratio	DEFL (inch)	Ratio
Washa & Fluck	Simple Span Rectangular Beams	B-1	0.107	0.92	1.00	1.09	1.09	1.18	1.03	1.12	1.09	1.18
		B-2	0.107	0.98	1.06	1.08	1.15	1.17	1.09	1.11	1.12	1.14
		B-3	0.107	1.04	1.14	1.10	1.24	1.19	1.18	1.13	1.15	1.11
		C-1	0.082	1.58	1.68	1.06	1.82	1.15	1.73	1.09	1.83	1.16
		C-2	0.082	1.71	1.78	1.04	1.91	1.12	1.82	1.06	1.87	1.09
		C-3	0.082	1.88	1.91	1.02	2.04	1.08	1.95	1.04	1.87	0.99
Yu & Winter	Simple Span T-Beams	A	0.440	1.34	1.21	0.90	1.28	0.96	1.24	0.93	1.28	0.96
		B	0.441	1.24	1.18	0.95	1.24	1.00	1.20	0.97	1.28	1.03
		C	0.439	1.19	1.17	0.98	1.23	1.03	1.19	1.00	1.26	1.06
		F	0.260	2.20	2.28	1.04	2.37	1.08	2.31	1.05	2.33	1.06

*Includes the dead weight of the beams.

**From the computer.

presented in this thesis and the current ACI 318-71 method are compared with the test data. In all the calculations the measured value of the material properties were used.

Rectangular Beams

As can be seen from Table 4, the "best" answers are obtained from the general method; the average ratio of the computed to the measured deflections for this method is only 1.06.

Method 1, which only involves an evaluation of the moment of inertia at midspan, provides answers having an average ratio of computed to measured deflections slightly under 1.15. When comparing the answers obtained from Method 1 to the theoretical value from the general method the average ratio is only 1.08. This good correlation shows that a key variable in the calculation of deflections is the depth of the cracks in the region of maximum moment, since it is this variable which is taken account of in Method 1. This fact was stated previously in Chapter IV; the reasoning is illustrated in Figure 13, page 54.

Method 2, which considers the variation of the value of I as the moment changes, gives, as expected, somewhat better results than Method 1. The average ratio of computed to measured deflection is in this case 1.09. When compared to the general method, the answers obtained from Method 2 are 1.03 times the theoretical value. This indicates that the assumptions made in deriving Equation (4.10) are very good and are "conservative."

The deflections obtained using the ACI 318-71 method are also shown for illustration. The average ratio of computed to measured deflections in this case is 1.11; this value is somewhere between the accuracy

provided by Method 1 and Method 2.

Tee Beams

In the case of the tee beams, the deflections predicted by the general method are lower in the average than those measured in the tests. The reason for this is probably the fact that the strain distribution in the flange is not as uniform as it was assumed to be in the calculations. The ratio of computed to measured deflection was in this case 0.97. Even though this value is less than one, due probably to the reason previously mentioned, the results are still very good.

Method 1 has an average ratio of 1.02, Method 2 of 0.99 and the ACI 318-71 Code of 1.03.

It is important to note here that good results have been obtained using the methods based on moment-curvature relationships, even though the effect of the concrete between tension cracks has been neglected. This result is consistent with the discussion presented in Section VII of Chapter III.

CHAPTER VI

SUMMARY AND CONCLUSIONS

I. SUMMARY

In this thesis a method based on moment-curvature relationships to calculate short-time deflections of reinforced concrete beams has been developed. A procedure to determine the moment-curvature relationships of reinforced concrete sections subjected to bending moment was presented and discussed.

The calculation of immediate deflections using M-ϕ relationships, as derived in this study, is usually a rather lengthy procedure. For this reason a computer program to carry out the required computations was developed. A detailed description of the computer program is given in Appendix A.

An equation for the moment of inertia of a reinforced concrete section subject to a known bending moment was derived and is presented as Equation (4.10). The use of this equation to determine the value of I to use in the usual elastic theory equation for deflections is designated in this thesis as Method 1. In Method 2 the value of I given by Equation (4.10) was refined to take into account the variation of the bending moment along the span in the case of a simple beam with uniform load. The result of this analysis was condensed and presented as Equation (4.23).

A review was made of a number of methods that have been recommended since 1914 for predicting deflections of reinforced concrete beams.

Particular interest was placed in the current ACI 318-71 recommendations.

The primary objective of this study was to demonstrate the feasibility of calculating the immediate deflections of reinforced concrete beams on the basis of a knowledge of the moment-curvature relationships for each section. The applicability of this approach has frequently been questioned because the M-ϕ relationships are not strictly applicable to sections between flexural cracks. To show the small effect of the tensile concrete between cracks, ten beams for which test data were available were used to test the accuracy of the moment-curvature approach. The results are presented and discussed in Chapter V.

II. CONCLUSIONS

From the results obtained in the comparisons between measured deflections and those obtained from the application of the M-ϕ Method, the following conclusions can be drawn:

(1) The immediate deflections of reinforced concrete beams can be accurately predicted from moment-curvature relationships if sufficient data are known to determine these relationships. In the beams selected in this study to test the accuracy of the method, the average ratio of computed to measure deflections was 1.02.

(2) The tension carried by the concrete between flexural cracks appears to have a very small effect on the flexural rigidity of the member. Of major importance is the depth of the cracks; their exact location or spacing is of little practical importance.

(3) The modulus of elasticity of concrete at an early age (say, less than two months) is significantly less than the value of $57000\sqrt{f'c}$

recommended by the ACI 318-71 Code (2). In the case where the immediate deflection is only computed for the purpose of obtaining the total long-term deflection, this is probably of no concern since the magnification factors for creep and shrinkage have this effect already built in. However, for calculation of immediate deflection due to the live load, the use of the ACI procedure may lead to an unconservative estimation. The same phenomenon holds true in the case of the concrete modulus of rupture, which at an early concrete age is typically smaller than the value of $7.5\sqrt{f'c}$ suggested by the ACI Code. The reader is referred to References (4) and (5).

(4) The flexural rigidity of a reinforced concrete section at service loads (prior to yielding of the tension steel) can be smaller than the value given by the product of E_c and I_{tc}. This will be the case at those sections in which the stress in the most highly stressed concrete fiber exceeds the elastic limit (example on page 64).

The smallest value of the flexural rigidity that can be obtained from an application of the ACI 318-71 equation for I_{eff} is $E_c\ I_{tc}$. In the usual case the effective flexural rigidity of the member as a whole will be larger than that given by $E_c\ I_{tc}$, even though some sections may be stressed past the elastic limit. However, with the increasing use of very high strength steels this lower bound may result in calculated deflections which are lower than actual. Some investigation on this lower limit of $E_c\ I_{tc}$ for the flexural rigidity may be warranted.

The comparisons presented here in Table 4 are for beams with uniform loads. The results there compare favorably with results predicted by the

ACI Code equation, as this equation was developed on the basis of uniformly loaded beams. It would be interesting to compare the results of other tests, with other types of loads, to the ACI Code equation and to the equations developed in this thesis. Such a comparison would be potentially useful further study.

LIST OF REFERENCES

LIST OF REFERENCES

1. Park, R. and T. Paulay, Reinforced Concrete Structures. (New York: John Wiley & Sons, Inc., 1975).

2. ACI Committee 318, "Building Code Requirements for Concrete (ACI 318-71)," American Concrete Institute, Detroit, 1971, p. 27.

3. Branson, Dan E., "Instantaneous and Time-Dependent Deflections of Simple and Continuous Reinforced Concrete Beams," M.S. Thesis, University of Iowa, August 1964.

4. Yu, Wei-Wen and George Winter, "Instantaneous and Long Time Deflections of Reinforced Concrete Beams Under Working Loads," ACI Journal, Proceedings V, 57, No. 1, July 1960, pp. 29-50.

5. Washa, G. W. and P. G. Fluck, "The Effect of Compressive Reinforcement on the Plastic Flow of Reinforced Concrete Beams," ACI Journal, Proceedings V, 49, No. 8, October 1952, pp. 86-108.

6. ACI Committee 435, "Variability of Deflections of Simply Supported Reinforced Concrete Beams," ACI Journal, Proceedings V, 49, No. 8, October 1952, pp. 86-108.

7. Maney, G. A., "Relation Between Deformations and Deflections in Reinforced Concrete Beams," Proceedings ASTM, V, 14, 1914, Part II.

8. Swain, G. A., Structural Engineering, Strength of Materials, McGraw-Hill Book Company, New York, 1924.

9. Mirela, T. D., author-chairman, "Deflection of Reinforced Concrete Members," Progress Report of ACI Committee 307, ACI Journal, Proceedings V, 27, 1931, p. 351.

10. Murashev, V. E., "Theory of Appearance and Opening of Cracks, Computation of Reinforced Concrete Members," Stroitelnaya Promishlenost (Moscow), No. 11, 1940.

11. "Deflection of Reinforced Concrete Members," Bulletin ST-70, Portland Cement Association, 1947.

12. Levi, Franco, "Work of the European Concrete Committee," ACI Journal, Proceedings V, 57, No. 9, March 1961, pp. 1041-1070.

13. ACI Committee 318, "Building Code Requirements for Concrete (ACI 318-63)," American Concrete Institute, Detroit, 1963.

14. Blume, John A., Nathan M. Newmark, and Leo H. Corning, Design of Multistory Reinforced Concrete Buildings for Earthquake Motions, Portland Cement Association, 1961.

15. Ferguson, Phil M., Reinforced Concrete Fundamentals, New York: John Wiley & Sons, Inc., 1973).

16. Cross, Hardy and Newlin D. Morgan, Continuous Frames of Reinforced Concrete, John Wiley & Sons, Inc., New York, 1950.

17. Gonzales Cuevas, Oscar M., Francisco F. Robles, Juan G. Casillas, and Roger D. de Cossio, Concreto Reforzado, (Editorial Limusa, Mexico, 1975).

APPENDICES

APPENDIX A

APPENDIX A

EXPLANATION OF THE COMPUTER PROGRAM

The program that is presented here was designed to calculate the immediate deflection of reinforced concrete beams based on a moment curvature approach. The theory used in the development of this program is presented in detail in Chapter III of this thesis. The program was written in Fortran and is available from any of the time sharing terminals in the UTK system.

The following is a step-by-step description of how to use the program.

(1) Sign in, load DB400

(2) Input beam parameters which are:

Line Number	
1500	H = beam depth (in)
1600	BW = web width (in)
1700	BF = flange width (in) (equal to BW for rectangular beams)
1800	D = effective depth (in)
1900	AL = beam span (ft)
2000	DT = compression steel cover (in) (to centroid of steel)
2100	T = flange thickness (in)(zero for rectangular beams

(3) Input the material properties

Line Number

2300 FFC = ultimate concrete compressive stress (psi)

(4) Input the areas of reinforcement

Line Number

2500 ASBM = area of steel in tension in the region of positive moment (in^2)

2600 ASTM = area of steel in compression in the region of positive moment (in^2)

2700 ASBS = area of steel in compression in the region of negative moment (in^2)

2800 ASTS = area of steel in tension in the region of negative moment (in^2)

In the case of simple beams where there are no negative moments, only ASBM and ASTM need to be specified.

(5) Input the loading condition

If any concentrated loads are present, one needs to input their values and their distance from the left support.

Line Number

3401 - 3499 P(1) = first concentrated load (closer to left support) (Kips)

P(2) = second concentrated load

Etc.

3701 - 3799 XA(1) = distance of P(1) from left support (ft)

XA(2) = distance of P(2) from left support

Etc.

Input the values of the distributed load (if any) at both supports.

Line Number

3000 W1 = magnitude of the distributed load at the left support (k/ft)

3100 W2 = magnitude of the distributed load at the right support (k/ft)

If the beam is continuous, the moments at the supports must be input also. These moments are positive when they induce compression in the top fibers.

Line Number

3500 AML = moment produced by continuity at left support (k/ft). If nothing is input, zero is assumed.

3600 AMR = moment produced by continuity at right support (k/ft). If nothing is input, zero is assumed.

(6) At this time all necessary parameters have been input and the program is ready to run.

Commentary

Location of the Computed Deflection. The program has been written such that if the user does not specify the location along the span where the deflection is required, the deflection will be computed at midspan. (The output format specifies where the deflection was computed.) In the

case of non-symmetric loading the maximum deflection will not, in general, occur at midspan. If the maximum deflection is required, the user only needs to set the value of point (see line number 3300, Appendix B) equal to zero. This automatically calls the subroutine LARGE which calculates the location of the maximum deflection. The output in this case will be the location and the value of the maximum deflection.

If for any reason the deflection at a selected point along the beam is required, which is not necessarily the maximum or the one at midspan, the variable point should be made equal to the distance, in feet, from the left support, to where the deflection is required.

Precision. In this program the moments and curvatures along the beam are computed at a discrete number of points along the span. This number of points is determined by the length of the beam and a parameter, DELTA, which was set equal to 0.1 in the program. The number of points is equal to $\frac{\text{LENGTH}}{0.1}$ with a maximum of 500 points. This means that if a beam is longer than 50 feet the user must increase the value of delta to a value such that $\frac{\text{LENGTH}}{\text{DELTA}} \leq 500$ (see line 3900 in Appendix B).

A complete listing of the program is given in Appendix B.

APPENDIX B

APPENDIX B

THE PROGRAM

(DB400)

```
00100           REAL ITUP
00300           REAL ITUN
00400           REAL ITCP
00500           REAL ITCN
00600           REAL KDUP
00700           REAL KDUN
00800           REAL KDCP
00900           REAL KDCN
01000     C THIS ARE PARAMETERS WHICH MUST BE INPUT IN THE PROGRAM
01100     C BEAM PROPERTIES
01200           DIMENSION AM(500),CURV(500),SUM(500),PROB(500)
01300           DIMENSION ADIST(500),AMA(500),FDEL(500),F(20)
01400           DIMENSION X(500),XA(20)
01500            H=
01600            BW=
01700            BF=
01800            D=
01900            AL=
02000            DT=
02100           T=0.0
02200     C MATERIAL PROPERTIES
02300            FFC=
02400     C REINFORCEMENT
02500            ASPM=
02600            ASTM=
02700            ASPS=
02800            ASTS=
02900     C LOADING
03000            W1=
03100            W2=
03200            N=0
03300           POINT=AL/2.
03400     C LINES 3401 TO 3499 TO INPUT CONCENTRATED LOADS
03500           AML=0.0
03600           AMR=0.0
03700     C LINES 3701 TO 3799 TO INPUT LOCATION OF CONCENTRATED LOADS
03800     C PRECISION
03900           DELTA=0.1
04000     C THIS SECTION CALCULATES THE PARAMETERS WHICH ARE A
04100     C FUNCTION OF THE MATERIALS
04200            FC=57.*SQRT(FFC)
04300           AN=29000./FC
04400           FR=(7.5*SQRT(FFC))/1000.
04500           ECSF=FR/EC
04600     C THIS SECTION OF THE PROGRAM CALCULATES THE DEPTH TO THE
```

```
04700    C NEUTRAL AXIS AT DIFFERENT STAGES OF LOADING AND AT
04800    C DIFFERENT SECTIONS IN THE BEAM
04900    C THE CORRESPONDING RIGIDITIES ARE ALSO COMPUTED HEREIN
05000          PN=PF-PW
05100          KDUP=(0.5*PN*(T)**2+(AN-1.)*(ASPM*D+ASTM*DT)
05200         1  +0.5*PW*(H)**2)/((AN-1.)*(ASPM+ASTM)+T*PN+H*PW)
05300          ITUP=PF*(T)**3/12.+PF*T*(KDUP-0.5*T)**2+(AN-1.)
05400         1  *ASTM*(KDUP-DT)**2+PW*(H-T)**3/12.+PW*(H-T)*
05500         1  ((H+T)*0.5-KDUP)**2+(AN-1.)*ASPM*(D-KDUP)**2
05600          AA=PW/2.
05700          BB=PN*T+ASTM*(AN-1.)*DT*ASTM+AN*ASPM*D
05800          C=PF**2+4.*AA*CC
05900          QQ=SQRT(Q)
06000          KDCP=(QQ-BB)/(2.*AA)
06100          IF(T.EQ.0.) GO TO 31
06200          IF(KDCP.GT.T) GO TO 30
06300    31    CONTINUE
06400          AP=PF/2.
06500          BP=((AN-1.)*ASTM+AN*ASPM)
06600          CP=ASTM*DT*(AN-1.)+AN*ASPM*D
06700          AAQ=BP**2+4.*AP*CP
06800          AAQQ=SQRT(AAQ)
06900          KDCP=(AAQQ-BP)/(2.*AP)
07000          GO TO 35
07100    30    CONTINUE
07200          ITCP=PF*(T)**3/12.+PF*T*(KDCP-0.5*T)**2+(AN-1.)
07300         1  *ASTM*(KDCP-DT)**2+PW*(KDCP-T)**3/12.+PW*(KDCP-T
07400         1  )**3/4.+AN*ASPM*(D-KDCP)**2
07500          GO TO 40
07600    35    CONTINUE
07700          ITCP=PF*KDCP**3/3.+(AN-1.)*(KDCP-DT)**2*ASTM
07800         1  +AN*ASPM*(D-KDCP)**2
07900    40    CONTINUE
08000          KDUN=(0.5*PN*(T)**2+(AN-1.)*(ASPS*D+ASTS*DT)+0.5
08100         1  *PW*(H)**2)/((AN-1.)*(ASPS+ASTS)+T*PN+H*PW)
08200          ITUN=PF*(T)**3/12.+PF*T*(KDUN-0.5*T)**2+(AN-1.)
08300         1  *ASTS*(KDUN-DT)**2+PW*(H-T)**3/12.+PW*(H-T)*
08400         1  ((H+T)*0.5-KDUN)**2+(AN-1.)*ASPS*(D-KDUN)**2
08500          BBB=ASPS*(AN-1.)+AN*ASTS
08600          CCC=(AN-1.)*(H-D)*ASPS+AN*ASTS*D
08700          AC=BBB**2+4.*AA*CCC
08800          ACC=SQRT(AC)
08900          KDCN=(ACC-BBB)/(2.*AA)
09000          ITCN=PW*(KDCN)**3/3.+(AN-1.)*ASPS*(KDCN+D-H)**2
09100         1  +AN*ASTS*(H-DT-KDCN)**2
09200          FFY=0.5*AN*FFC*(D-KDCP)/(KDCP*1000.)
09300          FCRP=ECSF/(H-KDUP)
09400          FCRN=ECSF/KDUN
09500          AMCRP=FR*ITUP/((H-KDUP)*12.)
09600          AMYP=FFY*ITCP/((D-KDCP)*12.*AN)
09700          FYP=AMYP*12./(EC*ITCP)
09800          AMCRN=FR*ITUN/(KDUN*12.)
```

```
09900            AMYN=FFYN*ITCN/((H-DT-YDCN)*12.*AN)
10000            FYN=AMYN*12./(EC*ITCN)
10100    C THIS SECTION CALCULATES THE MOMENTS AT EVERY REQUIRED
10200    C POINT ALONG THE BEAM
10300            BL=(W2-W1)*AL/2.
10400            I=AL/DELTA
10500            DELTA=AL/I
10600            I=I+1
10700            DO 50 K=1,I
10800            AR=K-1
10900            X(K)=AR*DELTA
11000            AM(K)=AML*(AL-X(K))/AL+AMB*X(K)/AL+W1*AL*X(K)
11100         1  /2.-W1*(X(K))**2/2.+BL*X(K)-(W2-W1)*(X(K))**3
11200         1  /(6.*AL)
11300     50     CONTINUE
11400            IF(N.EQ.0) GO TO 100
11500            CALL CONMN (AL,X,P,YA,AM,N,I)
11600     100    CONTINUE
11700    C THIS SECTION CALCULATES THE CURVATURES AT EVERY X(K)
11800    C POINT
11900            DO 1000 L=1,I
12000            IF(AM(L).LT.0.0) GO TO 300
12100            IF(AM(L).GT.AMCRP) GO TO 200
12200            CURV(L)=AM(L)*12./(EC*ITOP)
12300            GO TO 1000
12400     200    CURV(L)=FCRP+(AM(L)-AMCRP)*(FYP-FCRP)/(AMYP-AMCRP)
12500            GO TO 1000
12600     300    IF(ABS(AM(L)).GT.AMCRN) GO TO 350
12700            CURV(L)=AM(L)*12./(EC*ITOP)
12800            GO TO 1000
12900     350    CURV(L)=-FCRN-(ABS(AM(L))-AMCRN)*(FYN-FCRN)/
13000         1  (AMYN-AMCRN)
13100     1000   CONTINUE
13200    C AT THIS POINT THE CURVATURES ALONG THE BEAM ARE KNOWN
13300    C AT EVERY X(K) POINT
13400            DEFLC=0.0
13500            SPROD=0.0
13600            DO 2000 NI=1,I
13700            M=NI+1
13800            SUM(NI)=(CURV(NI)+CURV(M))*DELTA/2.
13900            ADIST(NI)=AL-X(NI)-DELTA/2.
14000            PROD(NI)=SUM(NI)*ADIST(NI)
14100            SPROD=SPROD+PROD(NI)
14200     2000   CONTINUE
14300            REAC=SPROD*12./AL
14400            IF(POINT.NE.0.0) GO TO 2500
14500            CALL LARGE (DELTA,REAC,SUM,X,POINT)
14600     2500   CONTINUE
14700            DO 3000 NN=1,I
14800            AMA(NN)=POINT*ADIST(NN)-AL
14900            IF(AMA(NN).LT.0.0) GO TO 3000
15000            PDEL(NN)=SUM(NN)*AMA(NN)
```

```
15100                DEFLC=DEFLC+PDEL(NN)
15200      3000      CONTINUE
15300                FLECHA=12.*(REAC*POINT-DEFLC*12.)
15400                WRITE(5,111) POINT
15500      111       FORMAT(5X,'DEFLECTION WAS COMPUTED AT',2X,
15600           1    F10.4,2X,'FEET FROM LEFT SUPPORT')
15700                WRITE(5,222) FLECHA
15800      222       FORMAT(5X,'DEFLECTION=',2X,F8.6,1X,'INCHES')
15900                GO TO 5100
16000      5100      CONTINUE
16100                STOP
16200                END
16300                SUBROUTINE LARGE(DELTA,REAC,SUM,X,POINT)
16400                DIMENSION SUM(500),X(500)
16500                COUNT=REAC/12.
16600                KK=0
16700      80        KK=KK+1
16800                COUNT=COUNT-SUM(KK)
16900                IF(COUNT.LT.0.0) GO TO 90
17000                GO TO 80
17100      90        POINT=X(KK)+DELTA/2.
17200                CONTINUE
17300                RETURN
17400                END
17500                SUBROUTINE CONVN(AL,X,P,XA,AA,N,I)
17600                DIMENSION DIST(20),TERM(20),P(20),X(500),AA(500)
17700                DIMENSION XA(500)
17800                R=0.0
17900                DO 5 II=1,N
18000                ATERM=P(II)*(AL-XA(II))/AL
18100                R=R+ATERM
18200      5         CONTI
```

APPENDIX C

APPENDIX C

DERIVATIONS

C.1. THE MOMENT OF INTERTIA AT A SECTION OF A REINFORCED CONCRETE MEMBER, GIVEN THE BENDING MOMENT (METHOD 1)

$$I_s = \frac{M_s}{E_c \phi_s} \tag{C.1}$$

$$\phi_s = \phi_{cr} + \frac{(\phi_e - \phi_{cr})(M_s - M_{cr})}{(M_e - M_{cr})} \tag{C.2}$$

Equations (C.1) and (C.2) are presented and discussed on page 50. From Equations (3.6) and (3.13)

$$\phi_{cr} = \frac{M_{cr}}{E_c I_{tu}} \tag{C.3}$$

and

$$\phi_e = \frac{0.5\ f'_c}{E_c Kd} \tag{C.4}$$

Substituting Equations (C.3) and (C.4) into(C.2) and multiplying both sides of the equation by E_c, we obtain

$$E_c\phi_s = \frac{M_{cr}}{I_{tu}} + \frac{(\frac{M_e}{I_{tc}} - \frac{M_{cr}}{I_{tu}})(M_s - M_{cr})}{(M_e - M_{cr})} \qquad (C.5)$$

Now dividing both sides of Equation (C.5) by M_s and substituting Equation (C.1) in the lefthand side, we obtain

$$\frac{1}{I_s} = \frac{M_{cr}}{M_s I_{tu}} + \frac{(\frac{M_e}{I_{tc}} - \frac{M_{cr}}{I_{tu}})(M_s - M_{cr})}{M_s(M_e - M_{cr})} \qquad (C.6)$$

The following are some algebraic steps to solve for I_s.

$$\frac{1}{I_s} = \frac{M_{cr}}{M_s I_{tu}} + \frac{(M_e I_{tu} - M_{cr} I_{tc})(M_s - M_{cr})}{(M_e - M_{cr})\, M_s I_{tc} I_{tu}}$$

$$\frac{1}{I_s} = \frac{M_{cr}}{M_s I_{tu}} + \frac{(M_e M_s I_{tu} - M_{cr} M_s I_{tc} - M_e M_{cr} I_{tu} + M_{cr}^2 I_{tc})}{(M_e - M_{cr})\, M_s I_{tc} I_{tu}}$$

$$\frac{1}{I_s} = \frac{(M_e M_{cr} I_{tc} - M_{cr}^2 I_{tc} + M_e M_s I_{tu} - M_{cr} M_s I_{tc} - M_e M_{cr} I_{tu} + M_{cr}^2 I_{tc})}{(M_e - M_{cr})\, M_s I_{tc} I_{tu}}$$

$$\frac{1}{I_s} = \frac{I_{tu} M_e (1 - \frac{M_{cr}}{M_s}) + I_{tc} M_{cr} (\frac{M_e}{M_s} - 1)}{(M_e - M_{cr})\, I_{tc}\, I_{tu}}$$

Finally,

$$I_s = \frac{(M_e - M_{cr})\, I_{tc} I_{tu}}{I_{tu} M_e (1 - \frac{M_{cr}}{M_s}) - I_{tc} M_{cr} (1 - \frac{M_e}{M_s})} \qquad (C.7)$$

Equation (C.7) is presented on page 50 as Equation (4.6). The remainder of the derivation is shown in the main body of the thesis.

C.2. THE EFFECTIVE MOMENT OF INERTIA OF A SIMPLE BEAM WITH UNIFORM LOAD (METHOD 2)

Determination of A_1D_1 and A_2D_2

Figure C.1 is an amplification of Figure 14c only showing the part that includes A_1 and A_2.

From Figure C.1, A_1D_1 is given by:

$$A_1D_1 = G_1\mu_1 - G_2\mu_2 + G_3\mu_3 \tag{C.8}$$

From Figure C.2 it is apparent that G_1, G_2, μ_1 and μ_2 are given by:

$$G_1 = \frac{4M_s a^3}{6L^2E_cI_s} = \frac{2M_s a^3}{3L^2E_cI_s} \tag{C.9}$$

$$G_2 = \frac{4M_s 3}{6L^2E_cI_s} = \frac{2M_s a^3}{3L^2E_cI_{tu}} \tag{C.10}$$

$$\mu_1 = \mu_2 = \frac{a}{2} \tag{C.11}$$

G_3 is simply a triangle from which it is obvious that

$$G_3 = \frac{M_{cr}a}{2E_c}\left[\frac{1}{I_s} - \frac{1}{I_{tu}}\right] \tag{C.12}$$

and

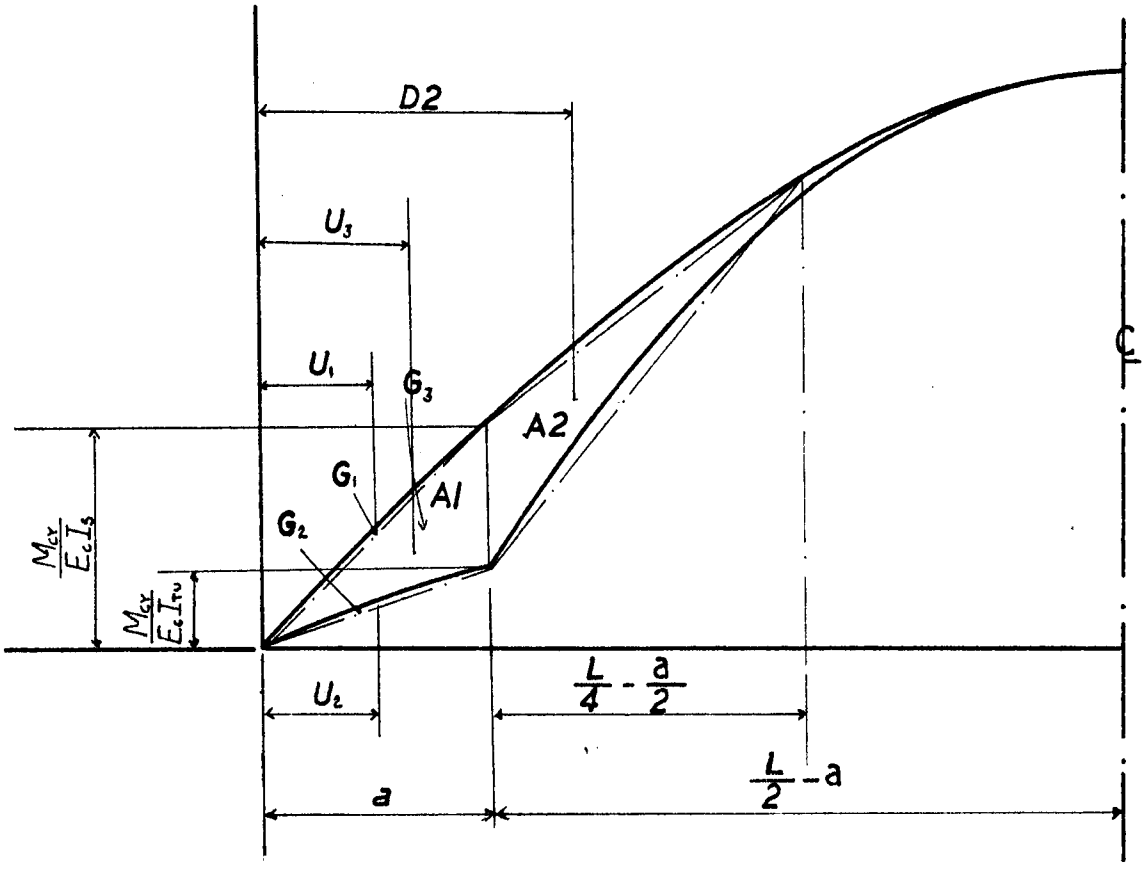

Figure C.1. Determination of A_1D_1 and A_2D_2

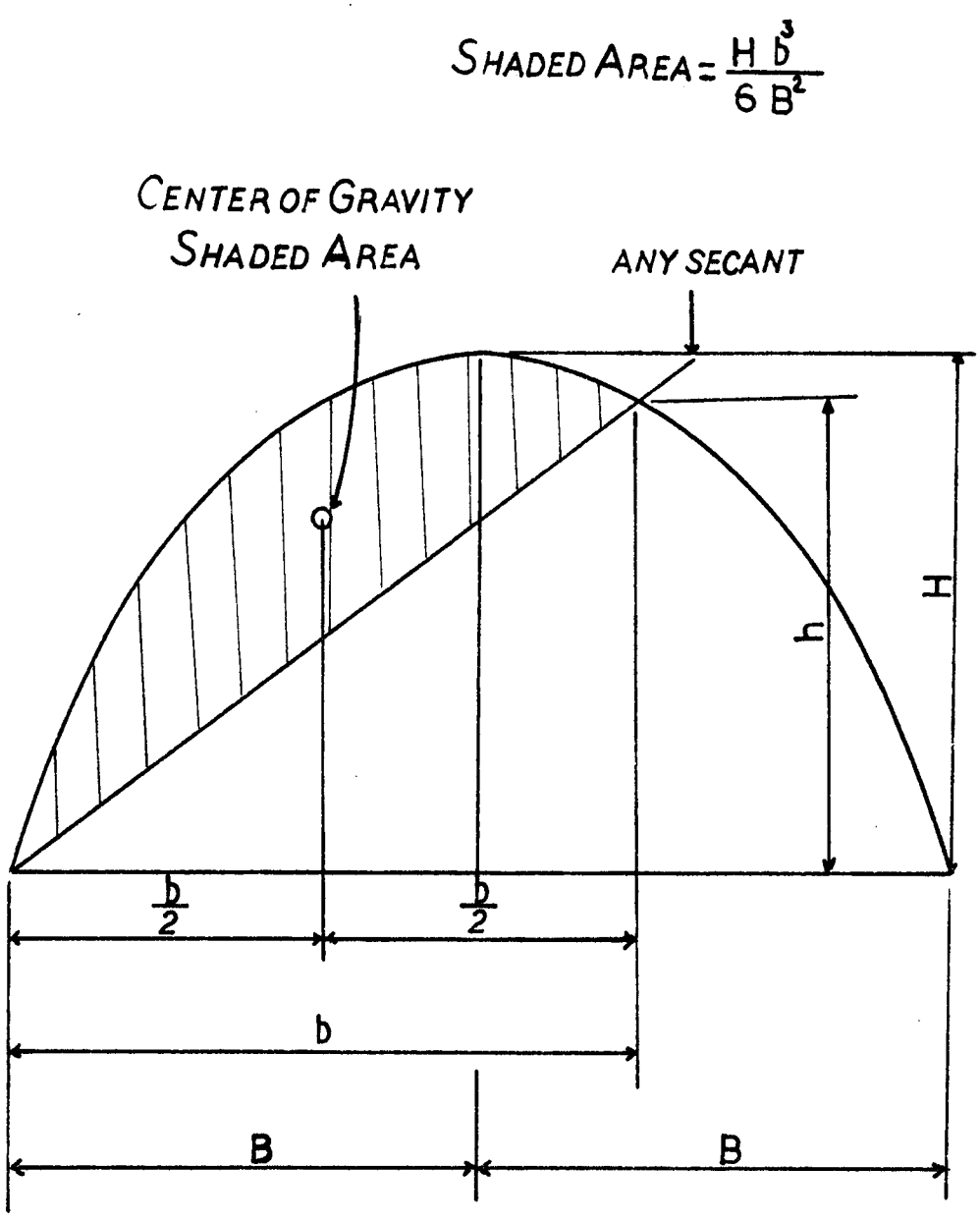

Figure C.2. Area Between a Parabolic Curve and a Secant

$$\mu_3 = \frac{2}{3} a \tag{C.13}$$

Then substituting Equations (C.9) through (c.13) into (C.8) we obtain

$$A_1 D_1 = \frac{2M_s a^3}{3L^2 E_c I_s} \quad \frac{a}{2} - \frac{2M_s a^3}{3L^2 E_c I_{tu}} \quad \frac{a}{2} + \frac{M_{cr} a}{2E_c} \quad \frac{2a}{3} \left[\frac{1}{I_s} - \frac{1}{I_{tu}}\right]$$

or

$$A_1 D_1 = \frac{M_s a^4}{3E_c L^2} \left[\frac{1}{I_s} - \frac{1}{I_{tu}}\right] + \frac{M_{cr} a^2}{3E_c} \left[\frac{1}{I_s} - \frac{1}{I_{tu}}\right] \tag{C.14}$$

Now define

$$I_{mean} = \frac{1}{\left[\frac{1}{I_s} - \frac{1}{I_{tu}}\right]} = \frac{I_s I_{tu}}{I_{tu} - I_s} \tag{C.15}$$

Substituting Equation (C.15) into (C.14)

$$A_1 D_1 = \frac{M_s a^4}{3E_c L^2 I_{mean}} + \frac{M_{cr} a^2}{3E_c I_{mean}} \tag{C.16}$$

For the case of uniform load,

$$M_s = \frac{wL^2}{8} \tag{C.17}$$

and

$$M_{cr} = \frac{wa}{2} (L - a) \tag{C.18}$$

Substituting these values for M_s and M_{cr} into Equation (C.16) gives

$$A_1D_1 = \frac{wa^4}{24\ E_c I_{mean}} + \frac{wa^3}{6\ E_c I_{mean}}\ (L - a)$$

which is

$$A_1D_1 = \frac{wa^4}{24\ E_c I_{mean}} - \frac{wa^4}{8\ E_c I_{mean}} \qquad (C.19)$$

Equation (C.17) is presented as Equation (4.16) on page 59.

The value of the term A_2D_2 can be rigorously evaluated but the resulting expression is too complicated to be practical. Since the final result for I_{eff} is not very sensitive to the value of A_2D_2, the simplifying assumption that A_2 and D_2 can be approximated by the triangle shown in Figure C1 was made here.

Under this assumption, it can be seen from Figure C1 that A_2 and D_2 are given by

$$A_2 \cong \frac{M_{cr}}{E_c}\left[\frac{1}{I_s} - \frac{1}{I_{tu}}\right]\frac{(\frac{L}{2} - a)}{2}\ \frac{1}{2} = \frac{M_{cr}(L - 2a)}{8E_c\ I_{mean}}$$

$$D_2 \cong a + \frac{(\frac{L}{2} - a)}{3} \times \frac{1}{2} = \frac{10a + L}{12}$$

Then

$$A_2D_2 \cong \frac{M_{cr}(L - 2a)}{8\ E_c\ I_{mean}}\ \frac{10a + L}{12} = \frac{M_{cr}L^2}{96\ E_c I_{mean}} + \frac{M_{cr}\ aL}{12\ E_c I_{mean}} - \frac{5a^2\ M_{cr}}{24\ E_c I_{mean}}$$

or

$$A_2D_2 \cong \frac{M_{cr}a^2}{96\ E_cI_{mean}}\ [(\frac{L}{a})^2 + 8(\frac{L}{a}) - 20]$$

Substituting the value for M_{cr} given in Equation (C.18) gives

$$A_2D_2 \cong \frac{wa^3(L - a)}{192\ E_cI_{mean}}\ [(\frac{L}{a})^2 + 8(\frac{L}{a}) - 20]$$

or

$$A_2D_2 \cong \frac{w}{192\ E_c\ I_{mean}}\ [aL^3 + 8a^2L^2 - 20\ a^3L - a^2L^2 - 8a^3L + 20a^4]$$

$$A_2D_2 \cong \frac{w}{192\ E_cI_{mean}}\ [20a^4 - 28a^3L + 7a^2L^2 + aL^3]$$

Finally,

$$A_2D_2 \cong \frac{5wa^4}{48\ E_cI_{mean}} - \frac{7wa^3L}{48\ E_cI_{mean}} + \frac{7wa^2L^2}{192\ E_cI_{mean}} + \frac{waL^3}{192\ E_cI_{mean}} \qquad (C.20)$$

Equation (C.20) is presented on page 59 as Equation (4.18). The remainder of the derivation is shown in the main body of the thesis.

VITA

Prospero Dionisio Bernal was born in Santo Domingo, Dominican Republic on November 4, 1953. He started his undergraduate studies at the University Autonoma of Santo Domingo in July 1970. In August of 1973 he transferred to the University of Tennessee at Chattanooga where in May 1975 he was graduated with the degree of Bachelor of Science in Engineering. From September 1975 to the present he has been attending the University of Tennessee at Knoxville where he is doing graduate work in Civil Engineering.