To the Graduate Council:

I am submitting herewith a thesis written by Warren R. Gilbert, Jr. entitled "A Wear Minimization Design Investigation of Feedline Splitters, Turning Sections, and Feed Nozzles of a Pneumatic Conveyed Solids System." I have examined the final copy of this thesis for form and content and recommend that it be accepted in partial fulfillment of the requirements for the degree of Master of Science, with a major in Mechanical Engineering.

H. Joe Wilkerson, Major Professor

We have read this thesis
and recommend its acceptance:

William S. Johnson

James R. Euler

M. Milligan

Accepted for the Council:

C. W. Minkel

The Graduate School

A WEAR MINIMIZATION DESIGN INVESTIGATION OF FEEDLINE SPLITTERS, TURNING SECTIONS, AND FEED NOZZLES OF A PNEUMATIC CONVEYED SOLIDS SYSTEM

A Thesis

Presented for the

Master of Science

Degree

The University of Tennessee, Knoxville

Warren R. Gilbert, Jr.

June 1984

ACKNOWLEDGMENTS

In the course of my research, a number of persons have assisted me generously. In particular, I am indebted to Professor H. Joe Wilkerson and Bill Hemphill. With their consultation, criticism, and encouragement, I was able to achieve results otherwise impossible. Whatever errors remain in my work are solely my responsibility. Support for this work was provided by Contract TV-53289A with the Energy Division of the Tennessee Valley Authority, Chattanooga, Tennessee.

My deepest thanks goes to my wife, Mary, for without her continued support and understanding, I would not have found the perseverance to complete this work.

A final thanks goes to Davia Brown and Mike Ellis for their invaluable assistance in transforming this work to its final form.

ABSTRACT

The adverse effects of wear has continually plagued the operation of the TVA 20 MW Atmospheric Fluidized Bed Combustion Pilot Plant. Wear has caused serious problems in all aspects of the pneumatically fed below-bed coal feed system. This has given rise to the development of high wear resistant designs of feedline splitters, turning sections, and feed nozzles.

Wear testing of PVC feedline system components was conducted at The University of Tennessee to determine the wear characteristics of different designs. PVC was chosen for the feedline system component material to accelerate the wear testing results. A series of similar tests were conducted to determine the merit of the wear resistant designs. While the testing was limited in scope due to size, material, and operating constraints, the general wear characteristic test results have proven to be valuable in assessing new wear resistant designs.

For long radius PVC bend wear testing, the wear rate was found to be proportional to the cube of the transport velocity. A change in solids mass flow rate also had a significant effect on the wear rate of the bends, about one half the effect of a change in transport velocity.

Wear testing of a standard 45 degree PVC wye showed that a 50 fold increase in the life of the wye compared to a long radius bend can be expected.

Two PVC floating valve caps with different recess depths were subjected to similar wear tests. It was found that a recess depth increase from 0.25 to 0.43 inches improved the wear resistance of the valve cap by a factor of six to seven.

Testing of a new 1:3 PVC feedline splitter design showed that the new splitter design was very resistant to wear. Testing also showed there was a relationship between the splitter's exit feedline lengths and the split equality. With equal exit feedline lengths, the split equality can be expected to be within $\pm$ 5 percent.

Two new steel feedline splitters were designed for replacement of the feedline splitters currently used at the TVA Pilot Plant: a 1:3 splitter design for compartments A-D, and a 1:6 splitter design for the modified recycle system. The 1:6 recycle splitter design was installed in the recycle system, and after 486 hours of operation, it has shown great promise. The 1:6 recycle splitter has not plugged, and more significantly, has not shown any observable signs of wear.

TABLE OF CONTENTS

CHAPTER		PAGE
1.	INTRODUCTION	1
	Background	1
	Coal and Limestone Feeding in a Fluidized Bed	5
	Combustion in a Fluidized Bed	5
2.	TVA 20 MW AFBC BELOW-BED COAL FEEDING SYSTEM	7
	Introduction	7
	TVA 20 MW Pilot Plant Description	7
	Recycle System Design	10
	Operating Problems	10
3.	STATEMENT OF THE PROBLEM	11
4.	UNIVERSITY OF TENNESSEE FLUIDIZED BED TEST FACILITY	12
5.	TURNING SECTION WEAR TESTS	17
	Introduction	17
	Experimental System	21
	Long Radius Bend Wear Testing	21
	45 Degree Wye Turning Section	26
	Connecting Section Tests	30
	Pressure Drop Tests	33
6.	BELOW BED CAP/CAGE FEEDER DESIGN AND WEAR CHARACTERISTIC TESTING	38
	Introduction	38
	Floating Valve Cap/Cage Design Considerations	41

CHAPTER PAGE

New Cage Development 45

Cap/Cage Tests and Results 48

Conclusions and Recommendations 54

7. FEEDLINE SPLITTERS 55

Introduction 55

Design Philosophy 61

UT Feedline Splitter Design 62

Introduction 62

Design considerations 63

Experimental system 77

Test results 79

Conclusions 91

TVA Compartments A-D Feedline Splitter Design 93

Introduction 93

Base design 94

Recommendations 107

Conclusions 111

TVA Recycle Feedline Splitter Design 112

Introduction 112

Base design 113

Recycle feed nozzles 118

Recommendations 126

Conclusions 132

CHAPTER PAGE

8. CONCLUSIONS AND RECOMMENDATIONS 134

LIST OF REFERENCES 137

APPENDICES 141

APPENDIX A. SPLITTER FLOW AREA COMPUTATION PROCEDURE 142

APPENDIX B. UNCERTAINTY ANALYSIS 145

VITA 148

LIST OF TABLES

TABLE		PAGE
1.1	U.S. Energy Sources and Growth	2
4.1	Limestone Sieve Analysis	15
6.1	TVA Pilot Plant Beds A-D Feed Port Thickness Measurements	40
7.1	TVA Pilot Plant Beds A-D Splitter Cone Wear Measurements	60
7.2	Operating Comparisons between TVA and UT Feed Systems	67
7.3	Scale Factors between TVA and UT Feed Systems	68
7.4	UT PVC 1:3 Splitter Test Summary	89
7.5	Feedline Size Wear Comparisons	106
7.6	Feedline Size Wear Percentage Comparisons	106
B.1	Instrument Uncertainties	146

LIST OF FIGURES

FIGURE		PAGE
2.1	TVA 20 MW AFBC Pilot Plant Coal/Limestone Underbed Feed System	8
4.1	UT Fluidized Bed Test Facility	13
5.1	Turning Section Test Configuration	22
5.2	45 Degree Long Radius Conduit Bend	23
5.3	Wear Rate of 45 Degree PVC Bends	25
5.4	Solids Packing in 45 Degree Wye Turning Section	28
5.5	45 Degree Wye: Turning Section Wear Pattern	29
5.6	Connecting Section Test Configuration	31
5.7.	Pressure Drop Comparisons for Solid Transport at 135 CFM	34
5.8	Pressure Drop Comparisons for Solid Transport at 100 CFM	35
6.1	TVA 20 MW AFBC Feed Nozzle Assembly	39
6.2	Post Wear Pattern	42
6.3	Floating Caps	44
6.4	Coal Feed Nozzle Cage—Beds A-D	46
6.5	Coal Feed Nozzle Cage: Post Assembly Detail—Beds A-D	47
6.6	Floating Cap Erosion Test Piping Schematic	49
6.7	PVC Floating Valve Cap Material Loss	50
6.8	PVC Floating Cap Erosion Test Results	52
7.1	TVA 20 MW AFBC 1:3 Splitter Design	57
7.2	TVA 20 MW AFBC Splitter Cone Measurement Locations	58
7.3	UT 1:3 PVC Splitter For Wear Testing	64
7.4	Splitter Nomenclature	70

FIGURE PAGE

7.5 UT 1:3 PVC Splitter Flow Area and Transport Velocity 72

7.6 UT 1:3 PVC Main Splitter Body 74

7.7 UT 1:3 PVC Recessed Splitter Cone 75

7.8 UT 1:3 PVC Splitter Top Assembly 76

7.9 UT 1:3 PVC Splitter Test Configuration 78

7.10 UT 1:3 PVC Splitter Wear after 0.4 Hours Test Time 82

7.11 UT 1:3 PVC Splitter Wear after 2 Hours Test Time 83

7.12 UT 1:3 PVC Splitter Wear after 10 Hours Test Time 84

7.13 UT 1:3 PVC Splitter Split Equality Results 87

7.14 UT 1:3 PVC Splitter Operating Pressure Drop Comparisons 92

7.15 TVA 1:3 A-D Splitter Flow Area 97

7.16 TVA 1:3 A-D Splitter Transport Velocity 98

7.17 TVA 1:3 A-D Assembled Splitter 99

7.18 TVA 1:3 A-D Main Splitter Body 100

7.19 TVA 1:3 A-D Recessed Splitter Cone 101

7.20 TVA 1:3 A-D Splitter Top 102

7.21 TVA 1:3 A-D Shim Plate 103

7.22 TVA 1:3 A-D Splitter Exits 104

7.23 TVA 1:3 Piping Path Lengths—Compartment D 109

7.24 Planar Feed System—TVA Compartment D 110

7.25 TVA 1:6 Recycle Splitter Flow Area 115

7.26 TVA 1:6 Recycle Splitter Transport Velocity—3 Inlet Conditions . . 116

7.27 TVA 1:6 Recycle Splitter Transport Velocity—Effect of Shim Plates 117

FIGURE PAGE

7.28 TVA 1:6 Recycle Splitter Transport Velocity—Effect of Recycle Temperature 119

7.29 TVA 1:6 Recycle Assembled Splitter 120

7.30 TVA 1:6 Recycle Main Splitter Body 121

7.31 TVA 1:6 Recycle Recessed Splitter Cone 122

7.32 TVA 1:6 Recycle Splitter Top 123

7.33 TVA 1:6 Recycle Shim Plate 124

7.34 TVA 1:6 Recycle Splitter Exits 125

7.35 Proposed Recycle Cap 127

7.36 Recycle Feed Nozzle Cage 128

7.37 Planar Recycle Feed System 129

7.38 TVA 1:6 Recycle Piping Path Lengths 131

A.1 Flow Area Calculation Nomenclature 143

LIST OF SYMBOLS

Symbol	Description
English Symbols	
A	area, ft^2
D	diameter, ft
ΔFL	feedline length difference from average length, %
g	gravitational acceleration, ft/sec^2
Gap	splitter main body to recessed internal cone distance, in
L	length of pipe, ft
M	mass flow rate, lbm/hr
ΔP	differential pressure, lbf/ft^2
Q	volumetric flow rate, cfm
r_1	radius of upper base, frustum of cone, in
r_2	radius of lower base, frustum of cone, in
ΔSE	split equality, %
V	velocity, ft/sec
Wr	uncertainty in W
y	elevation height, in
Greek symbols	
Δ	differential
θ	limestone feeder speed, rpm
ρ	density, lbm/ft^3

Subscripts

a	air
fa	friction, air
s	solids
ss	static head, solids
T	total
TA	transport air

Superscripts

*	equilibrium condition

Abbreviations

AFBC	atmospheric fluidized bed combustion
B&W	Babcock and Wilcox
cfm	cubic feet per minute
F - K	Fuller - Kinyon
in	inch
in^2	square inches
L/D	length to diameter ratio
MW	megawatt
psia	pound force per square inch absolute
psig	pound force per square inch gage
PVC	polyvinylchloride
TVA	Tennessee Valley Authority
UT	University of Tennessee

CHAPTER 1

INTRODUCTION

Background

The production of energy from available energy sources has become of most vital interest to the United States (U.S.). The U.S. energy sources and growth are shown in Table 1.1 [1,2]. There are some trends worthy of mention indicated from this table. From 1850 to 1880, the primary source of energy was wood. Coal became the primary source of energy in 1890, and was replaced by oil in 1950. Oil has remained the primary source of energy, and it was not until the energy crisis of the mid 1970's that this nation recognized the significant impact of our large dependence on foreign oil. Since that time, there has been an extensive effort to reduce that dependence by employing nationally available fuels. The U.S. has one of the largest reserves of solid fossil fuels (coal) in the world [3]. In 1971, the U.S. was the second largest producer of coal in the world [3]. With large coal reserves, coal is the most likely near-term alternative fuel.

The use of nuclear energy in the U.S. has risen in the past two decades, but stringent Nuclear Regulatory requirements and operating problems have escalated the cost of this energy source. No new nuclear plants have been ordered by utilities in the last 10 years, indicating a definite anti-nuclear trend. In 1979, the total energy supplied by nuclear energy was only 3.5 percent. It is predicted that this percentage will rise to around 10 percent by 1990, when nuclear plants currently under construction come on line. This is still a very small total percentage, leaving coal as the best near-term energy source for both growth needs and for replacement of oil fired power plants.

Table 1.1

U.S. Energy Sources and Growth

1850 - 1979 (Percents)

	Wood	Coal	Oil	Gas	Hydro	Nuc-lear	Total Quad (10^{15} BTU)	Ave. Growth %/yr
1850	90.7	9.3	0	0	0	0	2.4	–
1860	83.5	16.4	0.1	0	0	0	3.2	3.0
1870	73.2	26.5	0.3	0	0	0	4.0	2.3
1880	57.0	41.1	1.9	0	0	0	5.0	2.4
1890	35.9	57.9	2.2	3.7	0.3	0	7.0	3.4
1900	21.0	71.4	2.4	2.6	2.6	0	9.6	3.2
1910	10.7	76.7	6.1	3.3	3.2	0	16.6	5.6
1920	0	78.4	13.5	4.2	3.9	0	19.8	1.8
1930	0	61.2	26.5	8.8	3.5	0	22.3	1.2
1940	0	52.5	32.3	11.4	3.8	0	23.9	0.7
1950	0	38.0	39.7	18.1	4.2	0	34.0	3.6
1960	0	22.7	45.1	28.5	3.7	0	44.6	2.7
1970	0	18.9	44.2	32.6	4.0	0.4	66.8	4.1
1975	0	18.1	46.3	28.2	4.6	2.7	70.7	-2.3
1979	0	19.6	47.4	25.4	4.0	3.5	78.2	-0.2

The supply of low sulfur coal (less than 1 percent sulfur) is becoming diminished while the recovery cost is increasing. The low sulfur coal is concentrated in the Western U.S., thus a large transportation cost is involved to use this coal in the Eastern U.S. The Eastern U.S. does have an abundant supply of high sulfur coal, but the use of this coal presents other significant environmental and associated financial problems. More publicity has recently been given to acidic precipitation (acid rain) resulting from sulfur dioxide emissions from power plants. Legislation is now pending which would require the utilities to substantially reduce the amount of sulfur dioxide stack emissions. The methods currently used to remove sulfur dioxide from stack emissions are costly. Wet scrubbers, for example, are quite expensive and result in a wet sludge waste product that has no value and presents extremely costly disposal problems.

One remaining alternative for the utilization of high sulfur coal is in the development of new technologies. The most promising, near-term, technology to the emission problem is fluidized bed combustion. In this scheme, the boiler bed contains a 3-4 foot layer of crushed limestone particles into which a fuel (coal) is continually fed. Preheated air is forced up through the bed making the bed behave like a boiling fluid, hence the term fluidized. The air not only mixes the fuel throughout the bed but provides the oxidization source necessary for combustion.

The fluidized bed combustion concept is not new. The first documented report of a fluidized bed used for combustion was patented in 1928 by Fritx Winkler [4]. Some fluidization developments followed, but it was not until the early 1960's that research efforts were renewed by the British Coal Utilization Research Association and the Central Electricity Generating Board in Great

Britain. About the same time, the firm of Pope, Evans, and Robbins of the U.S. began fluidized bed work directed to the combustion of coal for power generation. These efforts have grown to the present day operation of a 20 Megawatt (MW) Atmospheric Fluidized Bed Combustion (AFBC) Pilot Plant cosponsored by the Tennessee Valley Authority (TVA) and the Electric Power Research Institute, Inc. Basically, this atmospheric fluidized bed operates at a pressure very slightly above atmospheric pressure. The operation of the 20 MW AFBC Pilot Plant began June, 1982. TVA is currently involved in the research, development, and design of a 160 MW AFBC demonstration facility. The purpose of this facility is to demonstrate the effectiveness of a utility sized AFBC plant which, if successful, would lead to commercialization of fluidized bed technology.

The increased interest of AFBC stems principally from the following potential advantages:

1. Sulfur dioxide control without the use of flue gas desulfurization.
2. Low nitric oxide emissions.
3. Expanded range of acceptable coal quality, enabling combustion of high sulfur coals not currently burned in conventional boilers (e.g. initial testing at the 20 MW AFBC Pilot Plant was with low cost, high sulfur (4.2 percent), Kentucky Number 9 coal [5]).

Although AFBC offers these advantages, it also has some engineering development problems associated with its design and operation. The most significant problem is the development of a reliable and effective coal feeding system [6]. This problem will be considered in detail in this report.

Coal and Limestone Feeding in a Fluidized Bed

There are three major types of coal and limestone feeding systems for a fluidized bed boiler. They are overbed feeders, in-bed feeders, and below-bed feeders.

An in-bed feeder system was one of the first concepts tested. A needle design was used at the Rivesville, West Virginia facility, but continuous plugging problems plagued the feed system over its four year operating life and was terminated in 1982.

The TVA 20 MW Pilot Plant is equipped to use either the below-bed or over-bed feed systems. For the over-bed feed system, coal and limestone are gravimetrically fed through two spreaders, similar to spreaders in stoker-fired boilers. In the below-bed feed system, the coal and limestone are mixed in proper ratios and pneumatically transported and enter the bed through feed nozzles that penetrate the fluidization grid plate located at the base of the bed. One objective of the TVA 20 MW AFBC Pilot Plant is the determination of relative advantages and disadvantages of both the below-bed and over-bed feed concepts. This report will concentrate on problems and solutions associated with the below-bed feed system.

Combustion in a Fluidized Bed

Limestone particles are placed in the fluidized bed in order to reduce sulfur dioxide emissions. Much of the sulfur dioxide released from the burning coal is captured by the calcium oxide (lime) resulting in the production of calcium sulfate (gypsum). Gypsum is a dry solid that can be easily handled and

can be used in land reclamation, building material, and agriculture applications. Sulfur retention rates of 90 percent have been reached with both the below-bed and over-bed feed system with washed coal at the TVA 20 MW AFBC Pilot Plant [7].

CHAPTER 2

TVA 20 MW AFBC BELOW-BED COAL FEEDING SYSTEM

Introduction

The TVA 20 MW AFBC Pilot Plant became operational in June 1982, and since that time the below-bed coal and limestone feed system has logged several thousand hours. In that length of time, several significant problems have arisen that warrant a redesign effort. Before identifying those problems, a brief description of the below-bed feed system will be given.

TVA 20 MW Pilot Plant Description

The coal and limestone below-bed feed system of the TVA 20 MW AFBC facility is shown in Figure 2.1 [8]. It is designed to deliver coal and limestone to the fluidized bed in proper quantities to maintain desired power output and to achieve a high sulfur retention. The brief description of the below-bed feed system that follows is taken from two TVA documents [5,8].

The coal/limestone below-bed feed system consists of five individually controlled feed trains, reference Figure 2.1. The active area of the fluidized bed (during normal operation) has 216 square feet, divided into four individual compartments A, B, C, and D. One feed train serves each compartment and incorporates a feedline splitter to split the main feedline into three feedlines. The fifth feed train serves the starting system that has 72 square feet of bed area. The startup system services eight feed points, thus requiring a feedline splitter that divides the flow into eight feedlines.

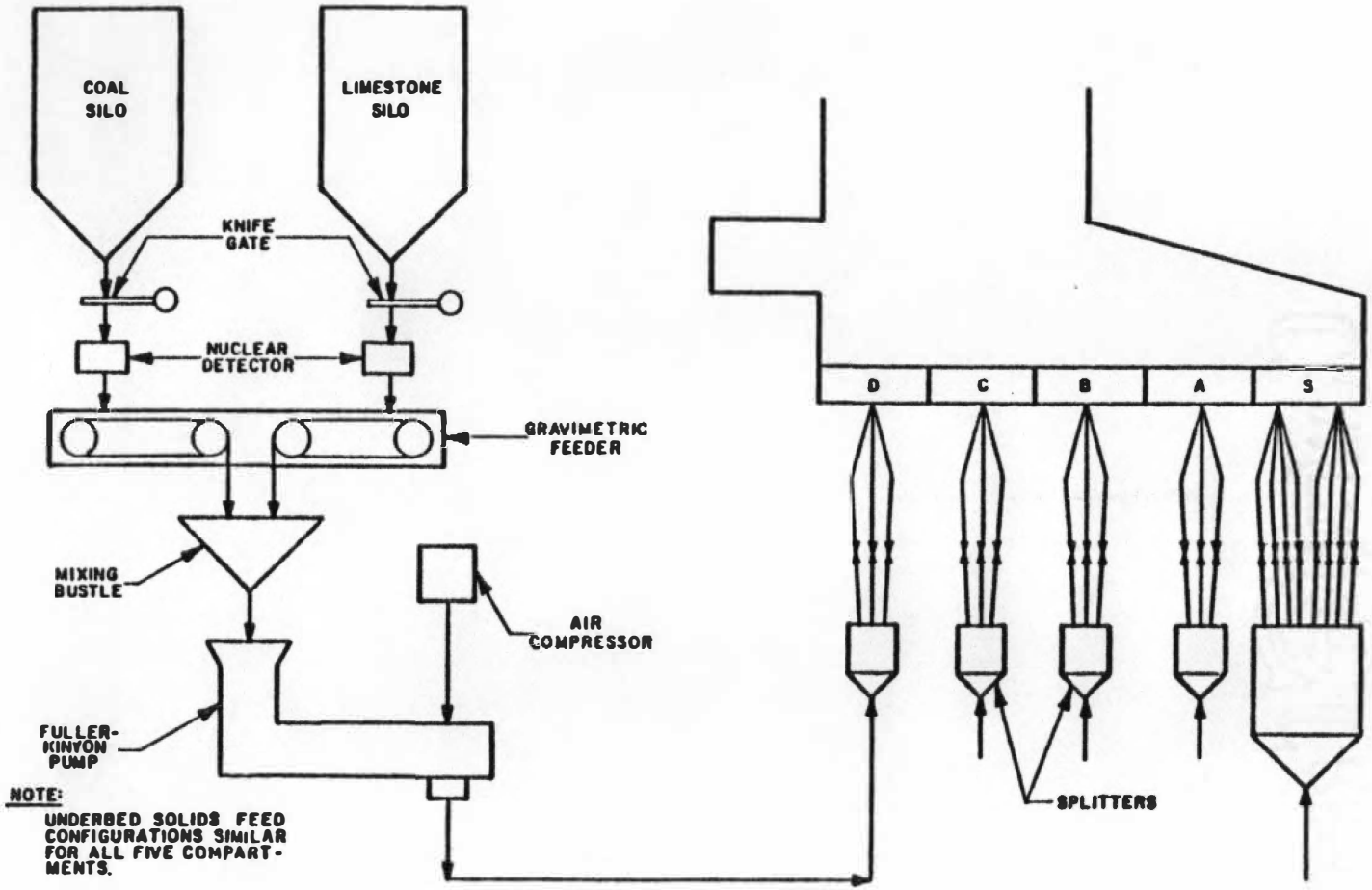

FIGURE 2.1

TVA 20 MW AFBC PILOT PLANT COAL / LIMESTONE UNDERBED FEED SYSTEM

Crushed coal (1/4 inch X 0 inch top size) or crushed limestone (1/8 inch X 0 inch top size) is fed from the yard to a tripper conveyor to fill any of five coal and limestone silos. There are five adjacent pairs of one coal and one limestone silo each. Each pair of silos feed a gravimetric feeder, that transfer a predetermined coal to limestone weight ratio into the inlet hopper of a Fuller-Kinyon (F-K) pump. The F-K pumps introduce the coal and limestone mixture into the pneumatic transport piping and also provide a positive seal against the transport system pressure. The F-K pumps use a screw to advance the material to the discharge end of the pump. The material enters the windbox chamber through a flapper valve which forms a seal to reduce reverse air flow. As material is discharged into the windbox chamber, a compressor injects air into the windbox chamber through nozzles located below the material entrance. The air entrains the coal and limestone mixture, thus conveying it through a transport line connected to the discharge of the windbox chamber. The coal and limestone mixture enters an initial horizontal run of 3 inch schedule 80 transport piping at the F-K pump discharge, elevation 44 feet. After this horizontal run, the transport piping turns vertically downward through 90 degree elbows to a 2 foot elevation. After the second 90 degree elbows, the piping runs horizontally for about 31 feet. Another set of 90 degree elbows redirects the flow vertically upward toward the feedline splitters at the 16.5 foot elevation. Downstream of the splitter are numerous 2 inch schedule 80 pipe bends that direct the coal/limestone mixture to the feed ports at the 35 foot elevation.

Recycle System Design

The Pilot Plant is equipped for the reinjection of small particle char material into the fluidized boiler to improve combustion efficiency, sulfur retention, and bed inventory. Char is removed from multitube cyclone type dust collectors and collected in hoppers that empty into a rotary feeder. The char is directed to a F-K pump that operates as previously described. The F-K pump discharges into a 5 inch schedule 80 feedline that transports the recycle material to the recycle splitter. The original recycle splitter divided the entering transport air and solids feed into three exit feedlines. As with the compartment A-D feed systems, the recycle system consisted of numerous bends to direct the flow to the feed ports. A redesign of the recycle system was conducted, and is described in Chapter 7.

Operating Problems

Since June of 1982, numerous operating problems have developed with the below-bed feed system. The most common operating problem is associated with wear. Coal and limestone particles are an extremely abrasive medium when pneumatically transported at velocities of 60 to 90 feet per second (ft/sec). Wear has therefore adversely effected nearly every component of the below-bed feed system, resulting in an unreliable and unacceptable feed system. Every steel feed system component that restricts or redirects the coal/limestone mixture has experienced severe wear problems. The wear of the numerous bends, feed nozzles, and feedline splitters has become a serious problem and will be outlined in following chapters.

CHAPTER 3

STATEMENT OF THE PROBLEM

The current severe wear experienced in the TVA 20 MW AFBC Pilot Plant of turning sections (any long radius elbow), feed nozzles, and feedline splitters must be minimized to insure a reliable pneumatic solids feed system. This is a necessity for a successful continued operation of a utility sized plant. A more clever design of these feed system components that would significantly reduce wear is the subject of this report. The basic design concepts presented can be used in any pneumatically conveyed solids system that utilizes these components. However, the specific designs presented are intended for replacement of those components currently in use in the TVA 20 MW AFBC facility. The feed system component designs were sized to meet both the physical and operational parameters used in the pilot plant. Wear characteristic tests were conducted to determine the success or failure of initial design concepts. From these test results, designs of feed nozzles and feedline splitters for both compartments A-D and recycle feed systems were performed. These designs will be presented along with recommendations for the corresponding feed piping systems. The requirements for the design of the feed system components will be outlined in each respective chapter.

CHAPTER 4

UNIVERSITY OF TENNESSEE FLUIDIZED BED TEST FACILITY

An experimental atmospheric fluidized bed test facility designed by Henry [9] and Knox [10] was constructed at UT and is illustrated in Figure 4.1. It is a cold (non-burning, ambient temperature) facility constructed to primarily study the fluidization and feeding characteristics of below-bed feed systems. The facility is vertically arranged over three floors. The design specifications, operating controls, procedures, and systems are detailed by both Henry [9] and Knox [10].

The majority of testing performed did not require all the operating capabilities of the facility, and only the primary systems used will be briefly described. The transport air system was supplied by an air compressor which serves the building. The transport air is remotely controlled with a pressure regulator. The transport air system consists of a pressure relief valve, a flow measurement orifice, and various control valves. The orifice flow meter was designed according to ASME standards and is installed in the transport air system to measure air flow rates prior to picking up any solid material. The differential pressure across the orifice was measured using a water manometer.

For all wear tests, limestone was used as the solids medium. A nominal 0.125 inch top size double screened limestone was used. The limestone sieve size was stated as 6 by 16, i.e., all material retained on a number 6 sieve or passing a number 16 sieve was removed. After several hours of operation, the erosion of limestone particles was evident from a sieve analysis shown in

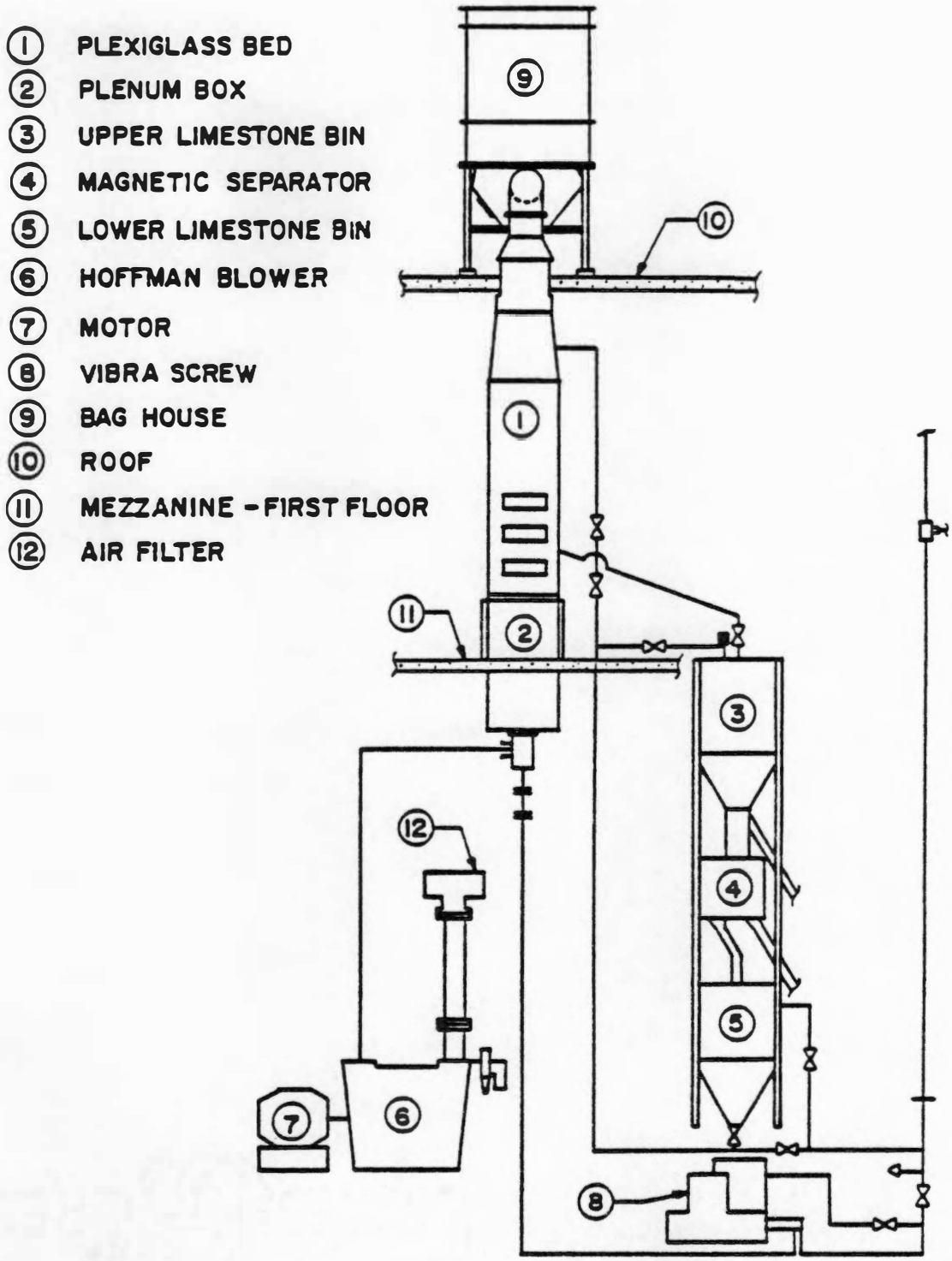

FIGURE 4.1
UT FLUIDIZED BED TEST FACILITY

Table 4.1. Fresh limestone was therefore periodically added to the base system; hence, the limestone sieve analysis shown in Table 4.1 should be representative of the particle sizes for any given wear test. The experimentally determined average bulk density of the limestone used was 98 lbm/ft^3. The true, or particle, density of the limestone was determined by a water displacement method to be 163 lbm/ft^3, agreeing closely to published data [11].

One important characteristic of the limestone was the saltation velocity. Saltation velocity is defined as the minimum velocity required to transport solid particles. At an operating velocity below saltation velocity, the solid particles will settle out of the transport stream. Obviously, it is vital to maintain the operating transport velocity safely above the saltation velocity. An experimentally determined saltation velocity for limestone could not be found in the literature, nor was there a convenient means for measurement of the saltation velocity in the UT facility. However, several correlations that predict saltation velocity were found in the literature. One paper compared statistically the predicted saltation velocity in horizontal transport using the accumulated air-solids data of many workers in the field [12]. The analysis showed that, of the seven correlations tested, the data was well fitted by the correlation of Rizk [13]. Rizk observed that the Froude number at saltation varied in a power law relationship with the solids to gas mass flow ratio. Using the Rizk correlation, the saltation velocity for limestone was predicted to be 35 ft/sec. One major limitation of this correlation was that only uniform particle sizes were considered. Only one investigator, Zenz [14], included the effect of wide particle distributions. Zenz's correlation is based on the most difficult transported particle. Depending on the distribution of particle sizes,

Table 4.1

Limestone Sieve Analysis

U.S. Screen Size	Size (inches)	Percent Passing Through %
7	0.1110	84.04
8	0.0937	53.91
10	0.0780	32.04
14	0.0550	15.76
16	0.0469	13.16
30	0.0234	5.65
Other	---	----

Total sample: 4072.6 grams

this may correspond to either the smallest or largest particle. For the limestone size distribution used, this was a 0.125 inch particle size. Zenz also includes a factor to account for the wide particle distribution. Using the Zenz correlation, the saltation velocity for the limestone used was 40 ft/sec. Since this correlation included the effect of wide particle distributions, it was considered as the actual saltation velocity.

The UT facility was equipped with a Vibra Screw Volumetric Live Bin Screw Feeder to inject solid material into the pneumatic feedlines. The feed rate of this type of feeder is essentially constant from hopper full to hopper empty conditions. The screw discharges to a 2 inch transport feedline. The speed of the screw is controlled remotely from the control area on the mezzanine. Long duration tests were conducted with limestone to calibrate the feeder. The speed of the screw, the test time and weight of limestone transported were recorded. The following linear relationship was developed from a least squared curve fit method.

$$M_S = 42.1\,(\theta) \tag{4-1}$$

This relation gives the limestone discharge rate (M_S) in lbm/hr as a function of the speed of the screw (θ) in rpm. The range of application of this equation is from 20 to 75 rpm, and air flow rates ranging from 75 to 135 cfm.

The transport air and limestone injection systems were the two primary systems utilized for the wear tests. Modifications to the UT facility for the wear tests will be discussed where applicable.

CHAPTER 5

TURNING SECTION WEAR TESTS

Introduction

Significant erosion of the long radius bends in the solids feed piping has been experienced at the TVA 20 MW Pilot Plant. The seriousness of the wear problems was clearly demonstrated in a very short time. In fact, the first wear failure occurred in a bent pipe turning section downstream of the splitter after only 153 hours of operation [5]. This turning section was a 9 1/2 inch radius, 48 degree bend fabricated from 2 inch schedule 80 carbon steel pipe. This was not an isolated incident, as ultrasonic testing showed appreciable thinning in similar feedline elbows signifying other failures would soon occur. This rapid occurrence of turning section failures eliminated the reliability required of a pneumatic solids feed system in utility sized power plants. It was therefore necessary to modify, or replace, the simple pipe bends downstream of the splitter with improved wear preventive turning sections.

TVA, therefore, either modified the existing elbows downstream of the splitter by welding wearbacks onto the outside of the elbows or replaced the elbows with ceramic lined turning sections. The wearbacks were welded with a gap of approximately 1/2 inch between the outside of the feedline bend and the inner surface of the wearback. The idea was to produce a buffer area that would allow the solids to wear upon themselves and not the metal of the pipe. The wearback modification did not perform as well as expected; ultrasonic testing revealed that these elbows were near failure after less than 200 hours of operation. The wearback elbows were then discarded and replaced with

ceramic lined turning sections. By April 1983, after about 700 hours of operation, none of the ceramic lined elbows had failed and showed little evidence of wear. However, the success of the ceramic lined turning sections to date is not viewed as a permanent solution to this type of feedline wear problem since the cost of each turning section is expensive. A great number of turning sections would be required in a full scale plant, thus escalating this cost. The development of an economically attractive method for turning the solids flow that would minimize wear to the turning section and adjoining piping is a highly desirable goal. An operating period of 8000 hours (91 percent availability for a year) would be a satisfactory goal.

In order to design a feed system to reach these goals, it is important to identify the mechanisms of erosion of a surface by a stream of solid particles. There has been some dispute concerning the mechanisms of erosion when a ductile metal is eroded by solid particles. Finnie [15] proposed that the primary erosion mechanism is by cutting, which is the result of a sharp cornered projectile machining a chip of material from the target surface. This theory evolved from the machining process on lathes and has been both quantitatively and qualitatively successful [16]. But, not all eroding particles are angular and not all impacts give rise to detached chips of material.

A second theory proposed by Neilson and Gilchrist [17] identified erosion by surface melting. After a particle impinges a surface, some of its kinetic energy is lost. Most of this energy is transformed into plastic deformation and then into heat within the surface. If this heat is generated quickly and within a small volume, the temperature there can reach the melting point. Surface material can then be removed more easily due to its much reduced cohesive strength.

A third theory was proposed by Bitter [18], who assumed that the removal of material from a surface occurs by the joint action of two mechanisms: cutting, which only occurs when the projectile strikes the target at grazing incidence; and deformation wear, which predominates at normal impingement. Bitter was careful to point out that deformation wear is characterized by repeated bombardment. Probably some combination of these three erosion theories actually occur in the Pilot Plant.

Several operating parameters of a pneumatically fed solids system have been shown to effect the wear rate of a surface. Finnie [19] showed the strong dependence between particle velocity and wear rate. Finnie eroded an annealed low-carbon steel with silicon carbide grains. For particle velocities ranging between 125 and 250 ft/sec, the wear rate was shown to be proportional to the square of the particle velocity.

Andrews [16] showed that a relationship existed between the solids mass flow rate and the wear rate of a surface. The general conclusion was that for an increase in the solids mass flow rate, the wear rate also increased.

The particle size and shape have also been proven to effect the wear rate. The results of Sheldon and Finnie [20] showed that for the range of particle sizes tested (10^{-3} to 10^{-1} inch), the wear rate steadily increased with an increase in the particle size. The shape of the particle also has an effect on the wear rate. It is clear that sharp angular particles will produce more erosion than spherical particles if all other properties are the same. This is confirmed by one of the earliest tests in the literature [21], in which it was noted that for sandblasting a surface, "sharp" sand gave four times the wear of "round" sand.

It should be recognized that these operating parameters in the TVA 20 MW AFBC facility are relatively fixed. The minimum operating transport velocity is determined by the saltation velocity of the solids medium. The total solids mass flow rate is determined by the load demand of the facility. Load control in an AFBC facility is maintained by slumping individual compartments as required. Thus, the solids mass flow rates of the active compartments are relatively stable. The coal feed stock used in the Pilot Plant for below-bed feeding is a crushed coal of a 1/4 inch maximum particle size. Thus, the size and shape of the coal particles are relatively fixed parameters. With relatively constant operating parameters, one remaining alternative to reduce the wear of the feedline piping system is through the development of high wear resistant turning sections. Wahl and Hartstein [22] describe a German patent to protect pipe bends that carry high abrasive materials. In this design, air is blown tangentially along the outside of the bend. Tests apparently showed that the life of a normal bend would be improved by a factor of twelve. Using a normal bend life of 200 hours, the air injection scheme could bring the total bend life to around 2500 hours, but this would still be far below the goal of 8000 hours. The use of air injection would also require another large operating system.

This chapter will focus on the relationship between transport velocity and solids mass flow rates to the wear rate of long radius bends. The wear rate of a standard 45 degree wye turning section will be compared to the wear rate of the long radius bends. The pressure drops associated with solid transport in horizontal, 45 degree,and vertical feedline orientations will also be investigated.

Experimental System

The UT AFBC facility was modified to allow the connection of a turning section to the existing 2 inch diameter schedule 80 vertical feedline, Figure 5-1. The transport air flow rate, solids mass flow rate, and total test time was monitored throughout the wear testing. This set-up proved an easy method for qualitative testing of the wear characteristics of different types of turning sections. As already noted, limestone was used as the wearing medium for the wear tests, reference Chapter 4. Minimal test time and a commercially available product were primary considerations in the choice of the turning section material. For these reasons, polyvinylchloride (PVC) was chosen for qualitative test purposes.

Long Radius Bend Wear Testing

Wear testing was conducted on several 2 inch diameter schedule 40, 45 degree long radius PVC conduit bends, Figure 5.2. The centerline radius of the bends was approximately 14 1/4 inches. The bends simulated the long radius bends reported in the TVA Pilot Plant. The first wear test was conducted at a limestone feed rate of approximately 2740 lbm/hr and a volumetric air flow rate of 100 cfm. The long radius bend wore completely through after nearly 5 hours.

The turning section was then sectioned along its centerline to reveal the worn areas. The long radius conduit bend showed a thinning region on the outside wall starting at the point where bending is apparent. The wall thickness gradually decreased on the outer wall to a paper thin region in line with the tangent of the inside wall bend, Figure 5.2. The width of this wear

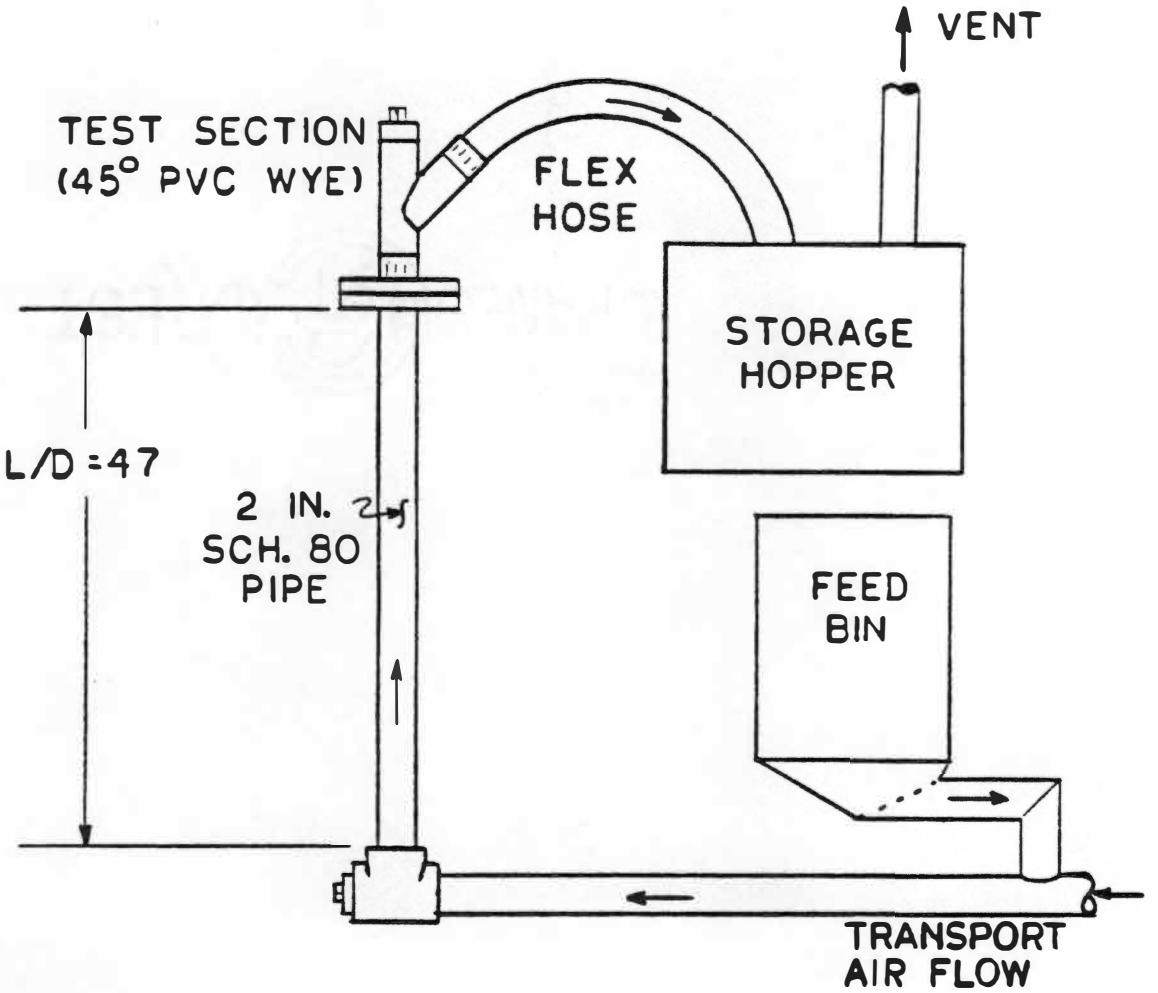

FIGURE 5.1
TURNING SECTION TEST CONFIGURATION

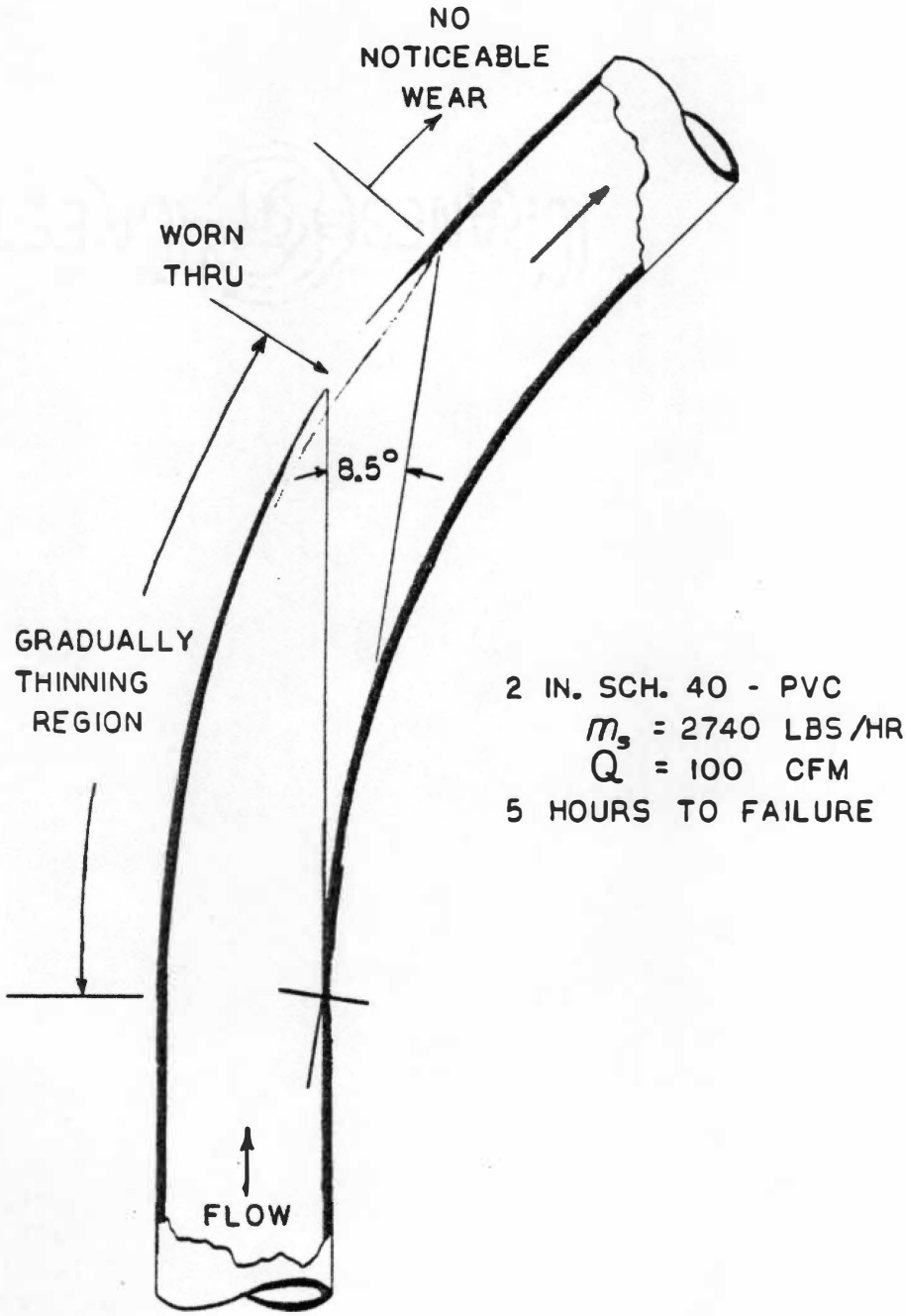

FIGURE 5.2
45 DEGREE LONG RADIUS CONDUIT BEND

pattern was approximately 0.70 inches. Continuing along the outside wall, the section revealed a "bullet shaped" profile of rapidly increasing thickness. After approximately 8 1/2 degrees off the inside wall tangent line, there were no signs of wear on the outer wall. No wear was noticed on the side walls nor the inside wall anywhere along the test section.

Two similarly constructed long radius PVC conduit bends were tested to determine the relationship between the transport air flow rate and the wear rate of the bends at a constant solids mass flow rate. The same solids mass flow rate 2740 lbm/hr, was used for both tests. The operating air flow rates were 75 and 125 cfm. By changing the air flow rate, both the transport velocity and the solids to air mass ratios were altered. The results of the three tests are compared in Figure 5.3 as a plot of wear rate versus transport velocity. The wear rate was computed by dividing the wall thickness of the bend by the time to failure. The results show the strong influence of transport velocity on the wear rate. A cubic curve fit is shown in Figure 5.3, indicating the wear rate is proportional to the cube of the transport velocity. The curve represents a constant solids mass flow rate line. The solid to air mass ratios were 7.5, 5.6, and 4.5 for air flow rates of 75, 100, and 125 cfm respectively. Thus, Figure 5.3 shows the combined influence of changes in transport velocity and solids to air mass ratios. A comparison between the 100 and 125 cfm points show that a combined 25 percent increase in transport velocity and a 20 percent reduction in solids to air mass ratio increased the wear rate by 70 percent. The results show clearly that a low transport velocity is desirable for the transportation of a constant solids mass flow rate from a wear rate perspective.

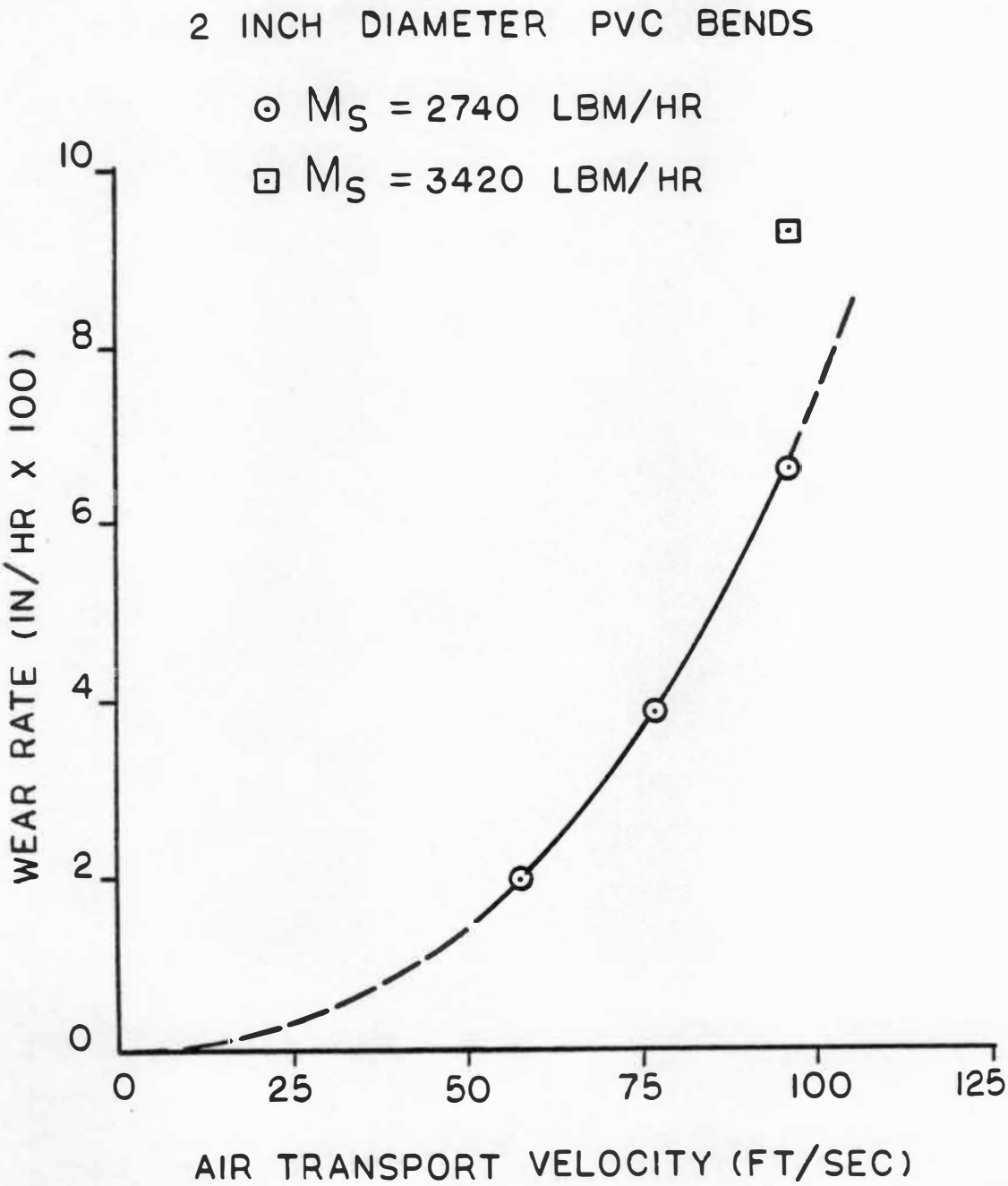

FIGURE 5.3
WEAR RATE OF 45 DEGREE PVC BENDS

Another similarly constructed bend was tested to determine the effect of transport velocity changes on the wear rate. The operating conditions were an air flow rate of 125 cfm and a solids mass flow rate of 3420 lbm/hr. The corresponding solids to air mass ratio was 5.6, equalling that used for the first test conducted at 100 cfm. Thus, by comparing the wear rates for these two tests, the effect of a net increase in transport velocity on wear rate was determined. A comparative increase in transport velocity of 25 percent resulted in a comparative increase in wear rate of 140 percent. This result is also shown in Figure 5.3 for comparison.

By comparing this result with the combined influence of transport velocity and solids to air mass ratio between the 100 and 125 cfm points, the effect of solids to air mass ratio was estimated. The end result was that a decrease of solids to air mass ratio of 20 percent (from 5.6 to 4.5) reduced the wear rate by 70 percent. From these preliminary test results, both the solids to air mass ratio and transport velocity parameters strongly effected the wear rate. Transport velocity effects were shown to be the controlling factor, nearly double the influence of solids to air mass ratio changes.

45 Degree Wye Turning Section

It was believed that the operation of a 45 degree wye, Figure 5.1, would significantly improve the total life of a turning section. The reason was due to the operational characteristics of the wye. Once a solids feed was established, the plugged end of the wye packed with solid particles. Other solid particles entering the wye impinged particles packed in the wye, and consequently, wear of the wye material was minimal. In order to test this concept, a single, 2 inch diameter schedule 40, 45 degree PVC wye was tested, Figure 5.1. The

operating conditions were an air flow rate of 100 cfm and a solids mass flow rate of 2740 lbm/hr, or a solids to air mass ratio of 5.6. The PVC wye was visually inspected after 5 hours, but showed no signs of appreciable wear and was reinstalled in the feed system. After a total of 10 hours of testing, the PVC wye section was removed to check for wear patterns.

The 45 degree PVC wye was sectioned along the centerline and showed the following wear characteristics. The plugged end of the wye filled completely with limestone and thus the limestone wore upon itself, resulting in no wear to this stagnant area of the turning section. The solids flow path and stagnant area is depicted in Figure 5.4. A minimal amount of wear to the turning section occurred in an elliptical shaped region at the packed solids/flow interface shown in Figure 5.5. This was due to solids rebound from the initial collision with the packed limestone. This wear region was apparent on the outer wall as well as the side walls. The reduction in wall thickness along this region is less than 10 percent. Surprisingly, the sharp corners where the 45 degree section intersects the straight portion of the wye (i.e., the crotch) showed little sign of wear. The wear that was apparent indicated that the turning section would eventually fail, but a significant increase in time to failure had been achieved.

The use of the 45 degree PVC wye section has shown definite advantages compared to the long radius bend. Most importantly, the time for wear failure would be greatly increased. The 45 degree PVC wye has shown a modest 10 percent reduction in wall thickness in twice the operating period needed to wear the long radius PVC bend to failure. This comparison is made for similar operating conditions and turning section wall thickness. Also the total effected area of wear in the feedline would be limited to small regions of the

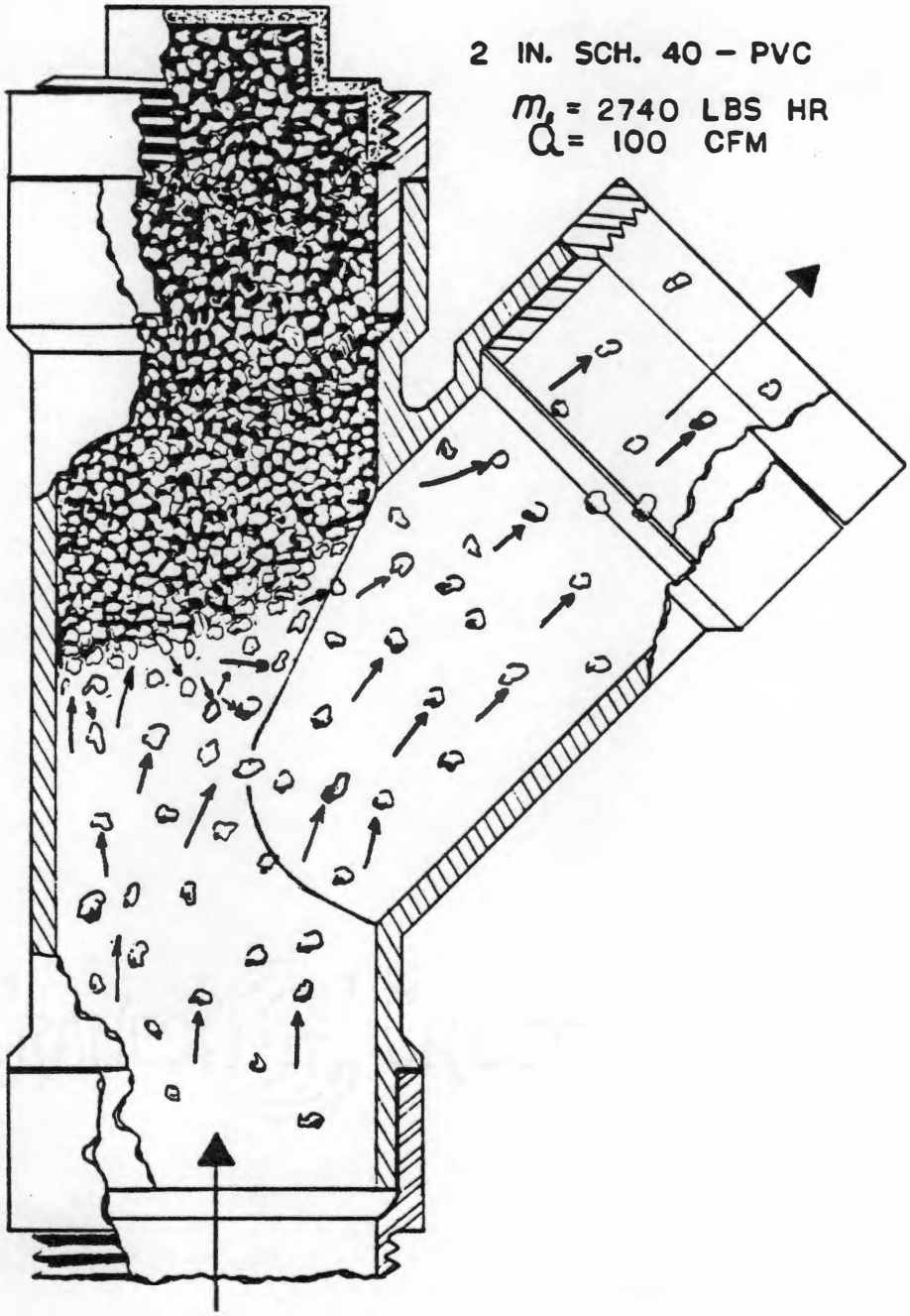

FIGURE 5.4
SOLIDS PACKING IN 45 DEGREE WYE TURNING SECTION

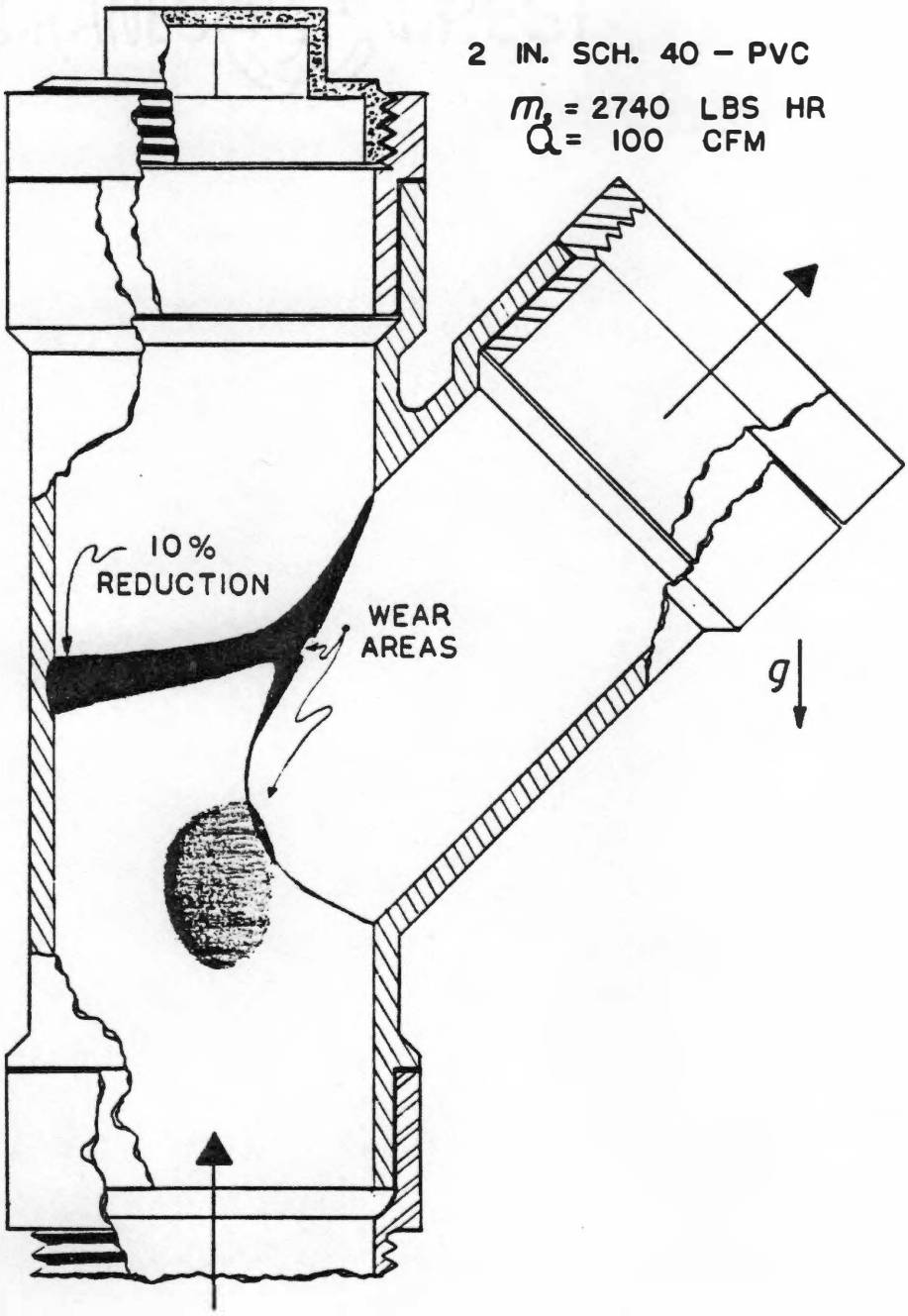

FIGURE 5.5
45 DEGREE WYE: TURNING SECTION WEAR PATTERN

turning section: deep wearbacks could be welded to the outside of the 45 degree wye (where necessary) to further lengthen the life of the wye. It is recommended that the turning section be flanged on both ends to minimize replacement downtime when failure eventually occurs. It should be further noted that the combination of three to four 45 degree wye sections with straight sections in between should produce a wide latitude of effective "bend" angles.

Connecting Section Tests

In March 1983, the compartment D, 3 inch schedule 80 horizontal to vertical 90 degree steel bend wore to failure at the TVA Pilot Plant. Based on development work previously discussed, TVA replaced the bend with a twin 45 degree steel wye, horizontal to vertical assembly, in order to obtain actual wear data with the 45 degree wyes. One concern was the determination of the proper minimum length for the connecting straight section between the two wyes. A qualitative wear test for determining this length was conducted. A schematic diagram of the UT facility for this testing is shown in Figure 5.6. The pipe was 2 inch schedule 80 PVC and both wyes were 2 inch schedule 40 PVC.

For time considerations, two straight test sections were given internal coats of bright yellow latex paint. The straight sections of pipe, 11 inches and 20 inches (L/D ratio of 5.5 and 10) were tested for 5 minutes at an air flow rate of 100 cfm and a limestone mass flow rate of 2740 lbm/hr. An inspection of the 45 degree inclined test section, Figure 5.6, revealed that all the paint had eroded throughout the entire pipe section with some exceptions. On the floor of the pipe section was an unworn area extending a few inches covering a

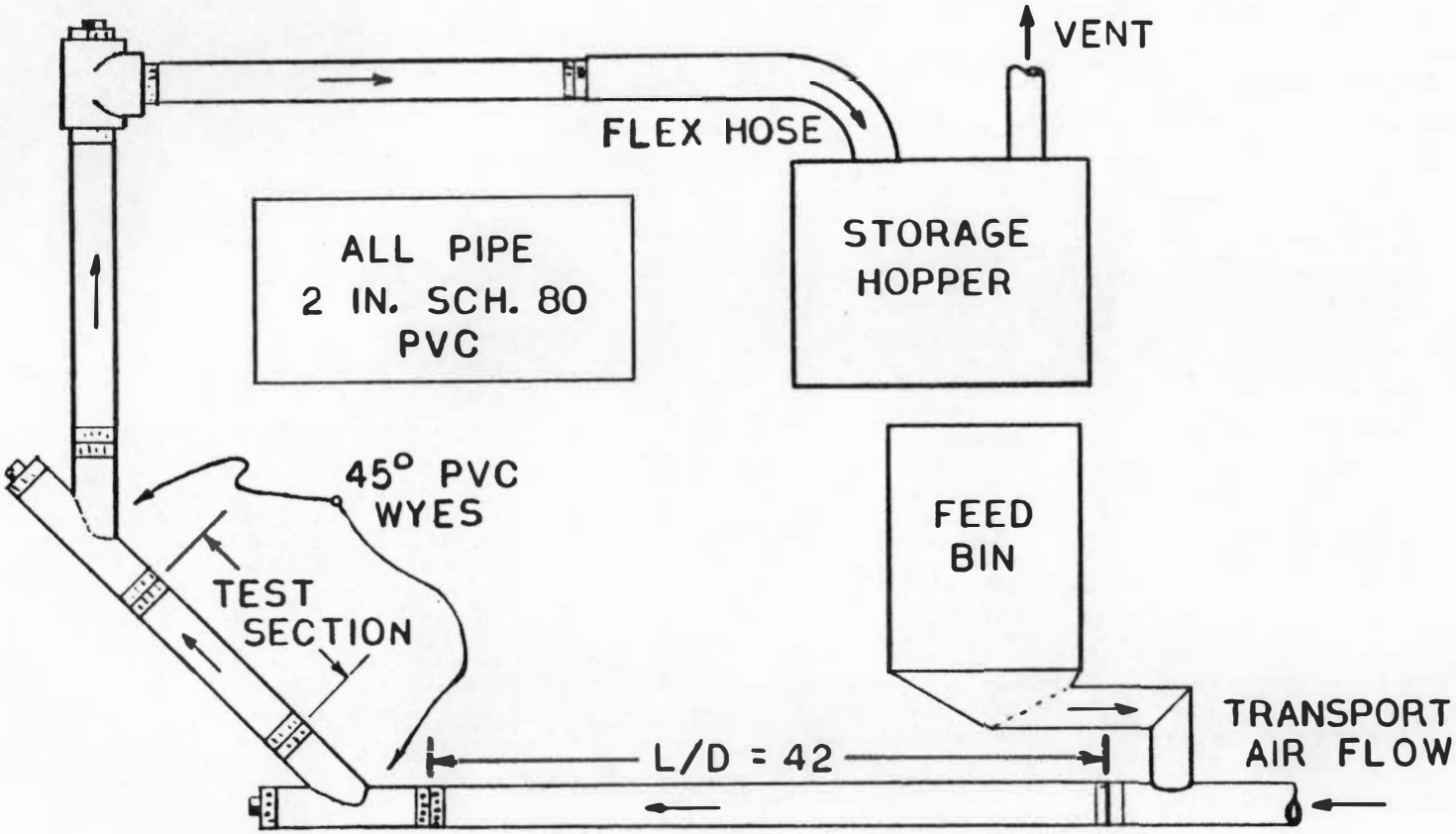

FIGURE 5.6
CONNECTING SECTION TEST CONFIGURATION

total arc of approximately 90 degrees. In other words, relatively high wear regions were located along the top and side of the connecting straight section just downstream of the 45 degree wye. It appeared that a uniform paint wear pattern resulted only 2 to 3 inches downstream of the first 45 degree wye, indicating that a L/D ratio of 2 or greater should be sufficient length for the connecting straight section. Both test sections yielded similar results.

Recent thickness measurements at the TVA Pilot Plant of the compartment D, 3 inch diameter twin 45 degree steel wye, horizontal to vertical assembly were made after a total of 3100 hours of operation [23]. The TVA twin 45 degree assembly configuration is similar to that shown for the UT test set-up in Figure 5.6. Although worn regions varied greatly, the 45 degree wyes have lost around 42 percent of the original wall thickness. Based on a linear wear rate, the 45 degree wyes should have a total life of around 7000 hours.

The highest wear region occurred at the top of the connecting straight section at an approximate L/D of 3.5. The wall thickness reduction was around 70 percent, indicating a total life of around 4200 hours. This wear results from solids rebound just downstream of the first 45 degree wye. By placing the second 45 degree wye at a L/D of 2 to 3, this high wear region should be minimized. A high wear region in the vertical pipe section downstream of the second 45 degree wye may occur, but by welding wearbacks at appropriate locations, the life of this section should be increased.

By either stellite hardening or welding wearbacks at appropriate locations of both the 45 degree wyes and adjoining straight sections, the life of the turning assembly should easily reach the goal of 8000 hours. This is a 50 fold increase in total life compared to the steel long radius elbows.

Pressure Drop Tests

The feedline pressure drops as a function of conveying parameters is important because it determines the feed system pumping costs. Testing was performed at UT to determine the pressure drop of solid transport in horizontal, vertical and 45 degree feedline orientations. The pipe test section was 2 inch schedule 80 PVC, with an L/D of 40. The test configuration for both the 45 degree and vertical testing is shown in Figure 5.1, page 22. For vertical testing, the test section (L/D= 40) replaced the vertical section (L/D = 47) shown in Figure 5.1, page 22. For 45 degree testing, the test section was installed immediately downstream of the 45 degree wye shown in Figure 5.1, page 22. During this testing, the pressure drop of the 45 degree wye was also measured. The test configuration for the horizontal testing is shown in Figure 5.6. The horizontal section immediately downstream of the 90 degree tee was used for the pressure drop measurements. Pressure taps were installed on both ends of the test section, and the pressure drop of the test section was measured with a water manometer. As before, limestone was used as the solids medium.

The results of the testing are shown in Figures 5.7 and 5.8 for the cases of an air flow rate of 135 and 100 cfm, respectively. The results show that the pressure drop magnitude categorized in descending order were for vertical, 45 degree, and horizontal transport. These results are in general agreement to other testing conducted for vertical and horizontal solids transport [24]. For the air only cases (corresponding to zero solids flow rate on Figures 5.7 and 5.8), the pressure drop was computed using the familiar Darcy friction factor commonly quoted in the literature [25]. The experimentally measured air only

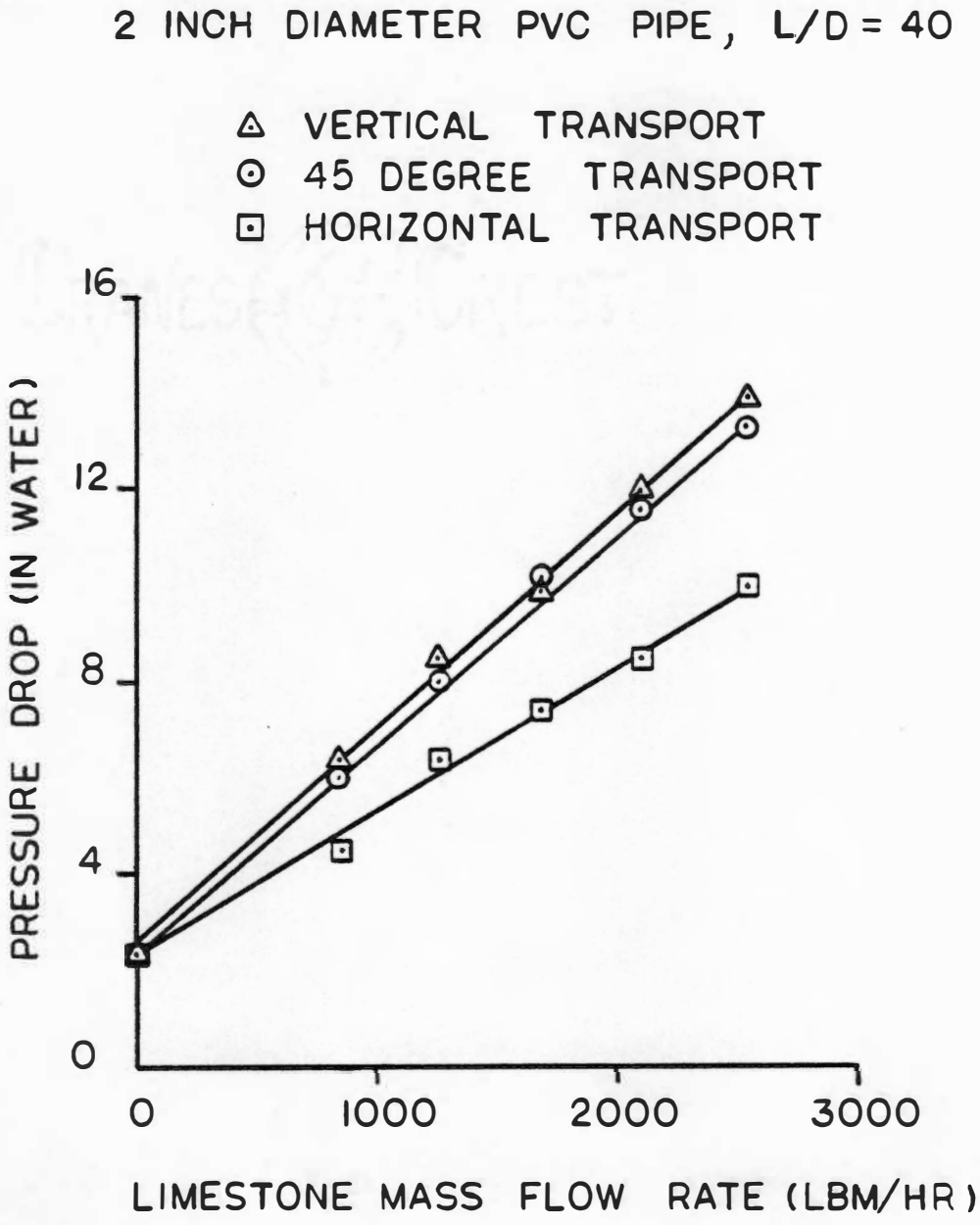

FIGURE 5.7

PRESSURE DROP COMPARISONS FOR SOLID TRANSPORT AT 135 CFM

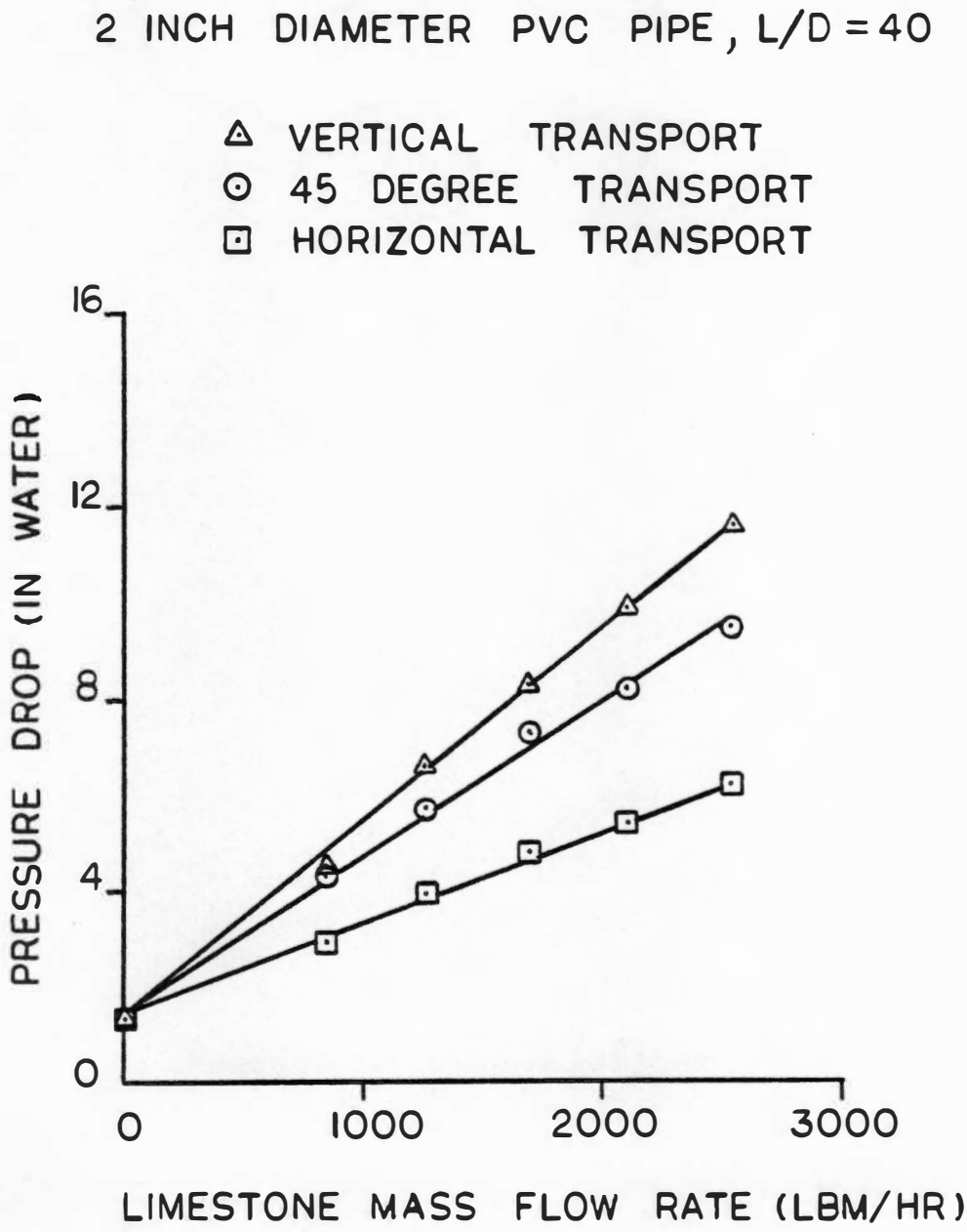

FIGURE 5.8

PRESSURE DROP COMPARISONS FOR SOLID TRANSPORT AT 100 CFM

pressure drop was consistently higher, but was within 15 percent of the pressure drop predicted by the Darcy friction factor.

The results shown in Figures 5.7 and 5.8 were curve fitted to the type of equation that follows. Equation 5.1 is for horizontal solid transport only.

$$\Delta P_T = \Delta P_{fa} + \Delta P_s \tag{5.1}$$

The pressure drop due to the friction of the air passing through the pipe was calculated using the Darcy friction factor. The pressure drop due to the solids was a combined term that included the effect of solid friction and acceleration.

$$\Delta P_s = \rho_a \frac{L}{D} \frac{Va^2}{2g} \left(\frac{Ms}{Ma}\right) K_s \tag{5.2}$$

In equation 5.2, the factor K_s accounts for both the solid friction and acceleration terms. The factor K_s was computed by subtracting the pressure drop due to friction of air from the total experimentally measured pressure drop.

For vertical solid transport, Hinkle [26] proposed an additional term to account for the static head of the solids. Thus, for vertical transport:

$$\Delta P_T = \Delta P_{fa} + \Delta P_s + \Delta P_{ss} \tag{5.3}$$

Where the pressure drop due to the static head of the solids is:

$$\Delta P_{ss} = \frac{V_a \rho_a L}{V_s^*} \frac{M_s}{M_a} \tag{5.4}$$

The term V_s^* corresponds to the equilibrium solid velocity (i.e., the velocity with no acceleration). Hinkle's empirical correlation for V_s^* was approximately equal to 0.6 V_a for the operating parameters tested. Again, K_s could be calculated for vertical solid transport from the experimentally measured total pressure drop and by computation of ΔP_{ss} (equation 5.4) and from the Darcy friction factor.

For 45 degree solid transport, equation 5.3 was modified to account for the 45 degree orientation.

$$\Delta P_T = \Delta P_{fa} + \Delta P_s + 0.707\ \Delta P_{ss} \tag{5.5}$$

As before, K_s was calculated once ΔP_{fa} and ΔP_{ss} were computed.

The curve fit of the experimental data (Figures 5.7 and 5.8) for horizontal, 45 degree, and vertical solid transport resulted in K_s values of 0.0165, 0.0246, and 0.0272, respectively. The differences in K_s values was evidently due to differences in the pressure drop from the acceleration of the solids. There was no convenient means for measuring the solids velocity in the current test configurations, thus no attempt was made to quantify the pressure drop due to the acceleration of the solids. Hinkle [26] found that this term was most significant, contributing as much as 70 to 90 percent of the total pressure drop.

The pressure drops of both a long radius PVC bend (Figure 5.2, page 23) and a 45 degree PVC wye (Figure 5.5, page 29) were also measured. In general, the 45 degree wye had a pressure drop approaching 3 times that of the long radius bend. In comparison to the results shown in Figures 5.7 and 5.8, the pressure drops for the long radius bend and the 45 degree wye correspond to an equivalent L/D of 5 and 15, respectively.

CHAPTER 6

BELOW BED CAP/CAGE FEEDER DESIGN AND WEAR CHARACTERISTIC TESTING

Introduction

The development of a reliable coal feed system has been recognized as one of the most critical problems facing the introduction of a utility sized fluidized bed boiler. Kress [27] investigated, designed, and tested a floating valve cap feeder at The University of Tennessee. The valve cap feed system design shown in Figure 6.1 was the feed nozzle originally installed in compartments A-D at the TVA 20 MW Pilot Plant [8]. It has two very desirable characteristics. First, when operating, the valve cap will fully open providing distribution of coal in all radial directions. Secondly, when not operating, the valve cap will seat on the feed pipe preventing bed material from draining back into the solids feedline. In effect, the cap operates as a check valve.

In general, the valve cap feed system at the TVA 20 MW Pilot Plant has operated very well. However, some problems with the feed nozzle have been experienced during the Pilot Plant operation. Wear has occurred with the floating valve caps and support posts of the feed nozzles. The recess in the floating valve cap is the key to the minimization of cap wear, allowing the solids to wear upon themselves and not the metal in the caps. Cap thickness measurements taken in October '82 and March '83 are documented in a TVA report [8] and are presented as Table 6.1. From this table, wear of the valve

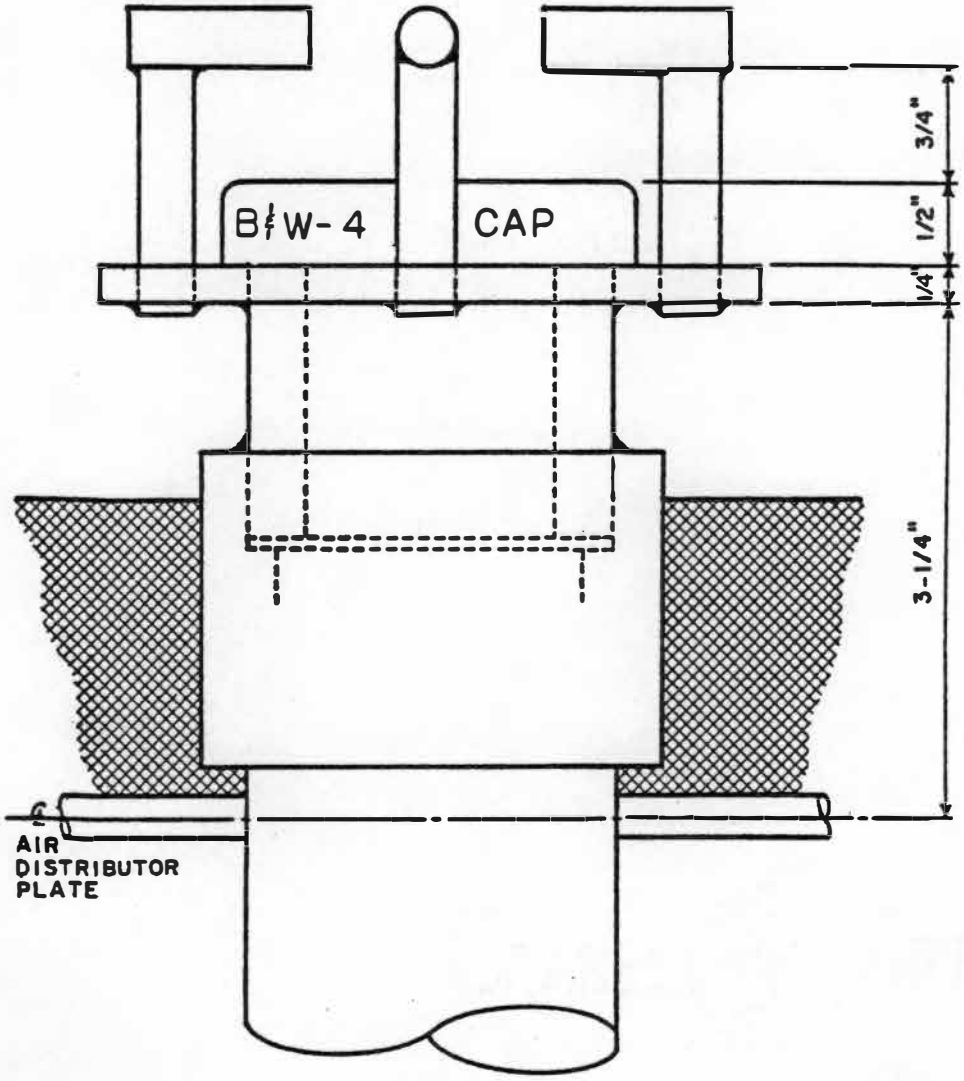

FIGURE 6.1
TVA 20 MW AFBC FEED NOZZLE ASSEMBLY

Table 6.1

TVA Pilot Plant Beds A-D Feed Port
Thickness Measurements

Feed Port	B & W - 4 Cap Thickness (inches)		Change (mils)	Interval of Operating Hours
	Oct. 82	Mar. 83*		
A-1	.215	.213	2	460
A-2	.237	.235	2	460
A-3	.229	.221	8	460
B-1	.229	.223	6	420
B-2	.238	.234	4	420
B-3	.238	.234	4	420
C-1	.259	.233	26	392
C-2	.250	.232	18	392
C-3	.243	.224	19	392
D-1	.236	.218	18	384
D-2	.228	.208	20	384
D-3	.254	.242	12	384

* Total operating time as of March 83 ranged from 1106-1250 hours

cap has occurred and is certainly an undesirable characteristic for any long life feeder system. A reevaluation of the valve cap design is thus warranted.

The support posts of the feed nozzles have also undergone wear as represented in Figure 6.2. As wear of the posts proceeds, the bending moment supplied by the force of the valve cap during operation causes the post to bend in an outward direction. This bending can cause the loss of valve caps, since the caps are then not sufficiently restrained by the retaining bars at the top of the feed nozzle. The loss of valve caps has been experienced at the pilot plant resulting in poor radial distribution of coal and to the drainback of hot bed material into the feedlines upon shutdown.

These problems associated with the valve cap feed system are significant and reduce the reliability of the feed system. This chapter will describe design modifications to the existing feed nozzle design to increase wear resistance. Long term wear characteristic tests were conducted for two valve cap designs to determine the relation between wear and recess depth.

Floating Valve Cap/Cage Design Considerations

Several design considerations were included in the feed nozzle design shown in Figure 6.1. Kress [27] showed from coal feed tests that coal can be distributed throughout the entire bed by the valve cap feed system and that a recessed valve cap will not degrade the system coal feeding performance in comparison to a flat valve cap. Kress [27] also performed very qualitative valve cap wear characteristic tests which indicated that a recessed valve cap will significantly reduce the wear of the valve cap. Consequently, a recessed valve cap was chosen for the feed nozzle design.

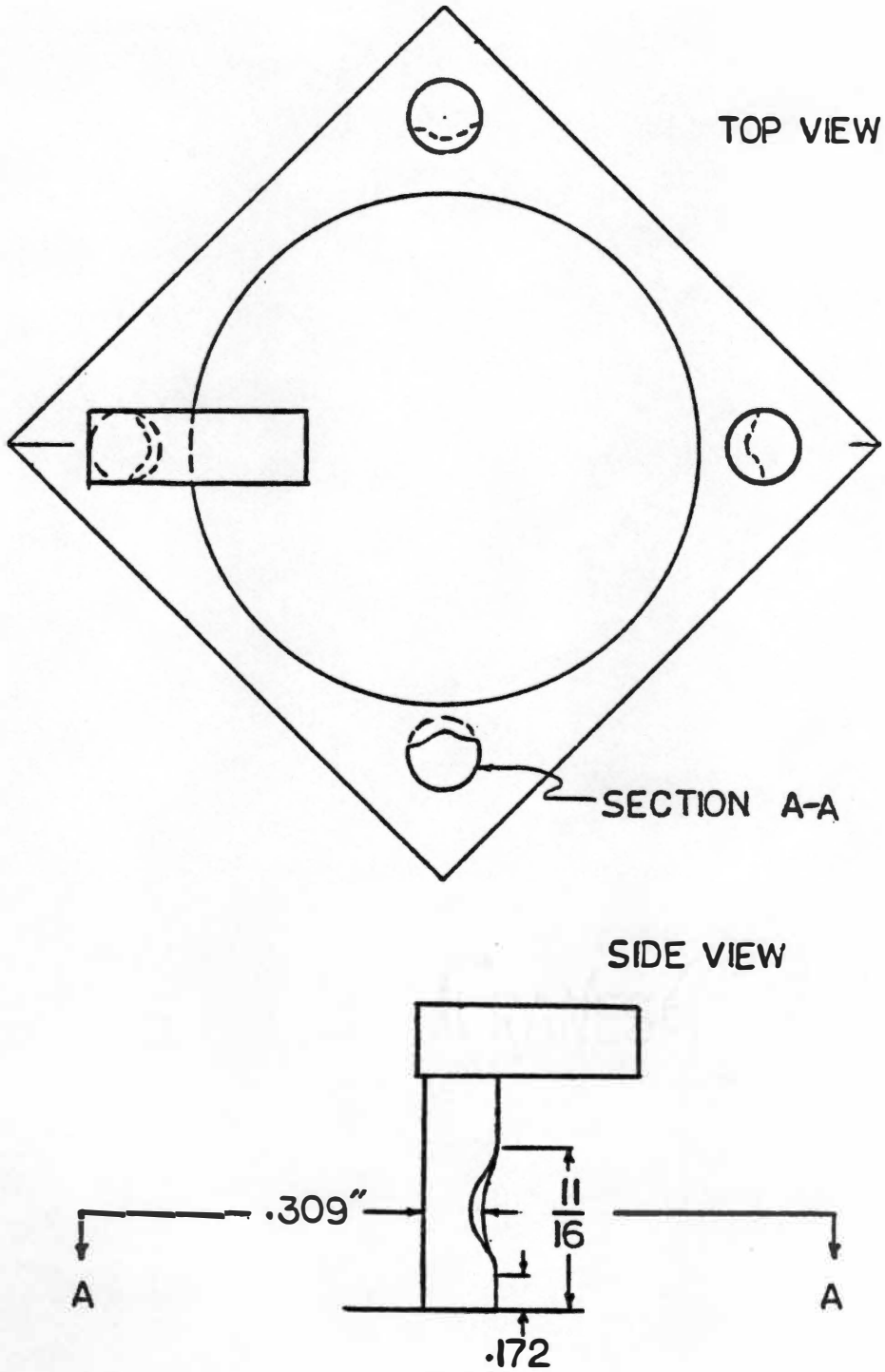

FIGURE 6.2
POST WEAR PATTERN

The cage and cap design must be compatible. The diametrical clearance between the cage posts and the valve cap should be a minimum of 2 times the largest bed partical size. This will prevent cap hang-up due to particle entrapment between the cap and cage. Kress [27] found that for a 3.0 inch inside cage post diameter, a 2.688 inch outside diameter valve cap would meet this criteria for a 1/8 inch maximum bed particle size. This size cap will still effectively cover the 2.0 inch schedule 160 feed pipe during no feed conditions. These are the sizes used in compartments A-D at the Pilot Plant, Figure 6.1.

A cap free travel dimension, designated as the cap gap, was recommended by Kress [27] to be 0.75 inches. This dimension was chosen to adhere to a "coal industry" rule of thumb which states that the minimum opening should be equal to three times the maximum transported particle size (i.e., a 1/4 inch diameter coal particle size). A cap gap of 0.75 inches was used in the initial feed nozzle installation.

The primary objective of the valve cap design is to create a proper balance between cap mass and transport air flow rate. The operating conditions at the TVA 20 MW Pilot Plant for compartments A-D are an air flow rate of 100 cfm at 80°F and 14.3 psia. It would be highly desirable for the valve cap to operate in a fully open position when subjected to these conditions. The added momentum of the coal flow would provide an added margin of safety to the design. Two valve caps were designed and tested that met the above requirements. The valve caps are designated as the B&W-4 and the UT-4, both of which are shown in Figure 6.3. The significant difference between the two caps is the recess depth. The B&W-4 valve cap design was selected by B&W for the initial operation of the TVA Pilot Plant and is shown in Figure 6.1.

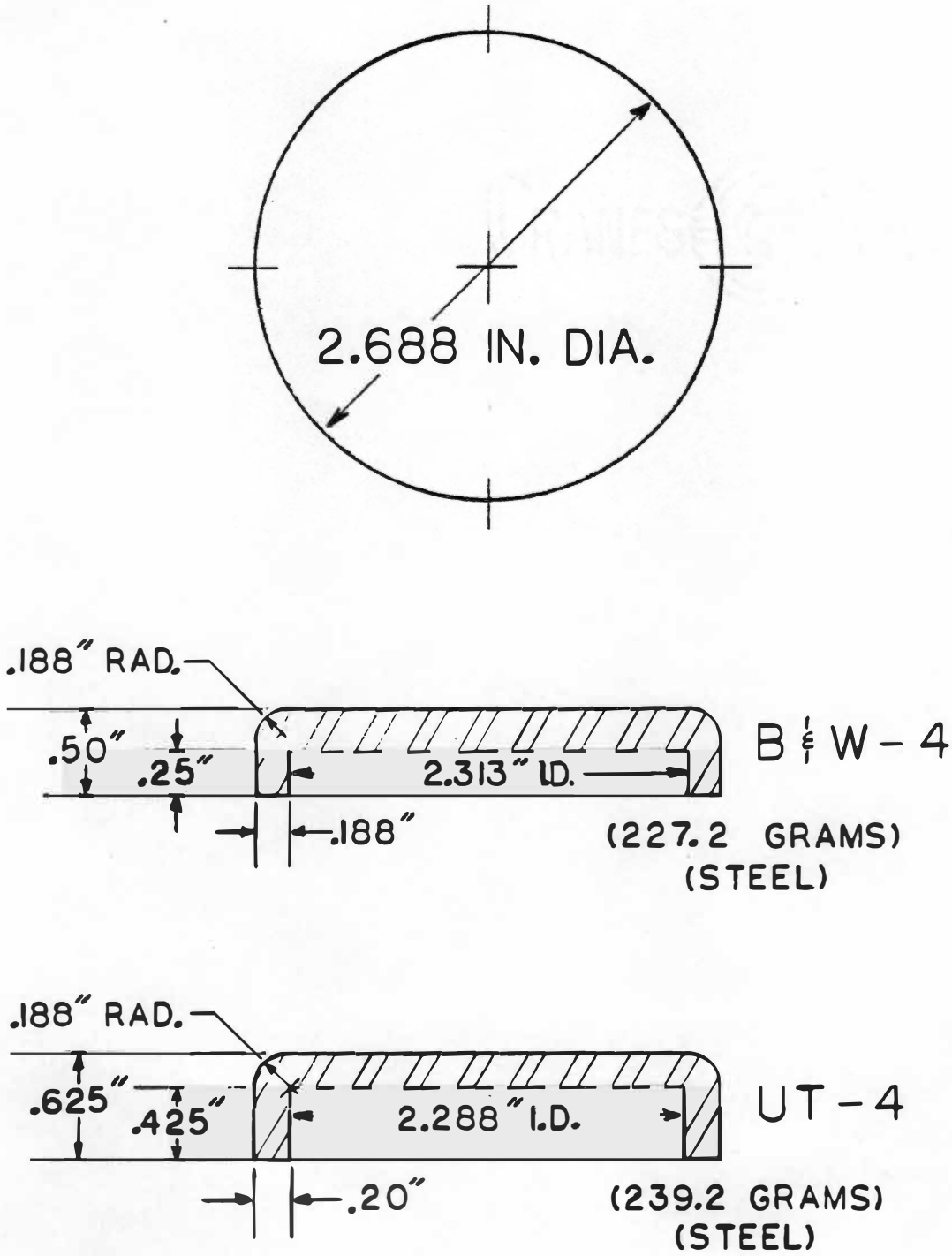

FIGURE 6.3
FLOATING CAPS

One additional design consideration was identified by Kress [27]. The cage top should be designed to minimize the contact area between itself and the fully open cap. A wide contact area is conducive to entrapping bed material, thus effectively reducing the cap gap.

New Cage Development

Modifications to the feed nozzle design were conducted to eliminate the problems previously described. The newly developed cage is shown in Figures 6.4 and 6.5. The cage design is adaptable for use with either the UT-4 or the B&W-4 valve cap, but is shown in Figure 6.4 with the UT-4 valve cap. The only difference in the new cage design to mate with the B&W-4 cap is the vertical dimension from the top of the support plate to the bottom edge of the post rests. The dimensions for the UT-4 and B&W-4 caps are 1.375 and 1.250 inches respectively. The principal design features of the cage are as follows. An inside post diameter of 3.0 inches was derived from the cap outside diameter plus 2.0 times the maximum bed particle size plus 1/16 inch for an added safety margin. The maximum limestone particle size used was 0.125 inches. A cap travel of 3/4 inch was used. A 3/8 inch square stock was oriented to present a knife edge for the contact surface between the cap rests and the valve cap. The knife edge will reduce the likelihood of particles becoming entrapped between the cap and the post rests. The cage posts of the cage have been increased to 1/2 inch diameter to increase post life. A reinforcing cross top was also included to prevent post bending and possible loss of a valve cap.

Ease of construction was also a consideration in the design of the cage. One main advantage of this cage is that it can be constructed in a shop

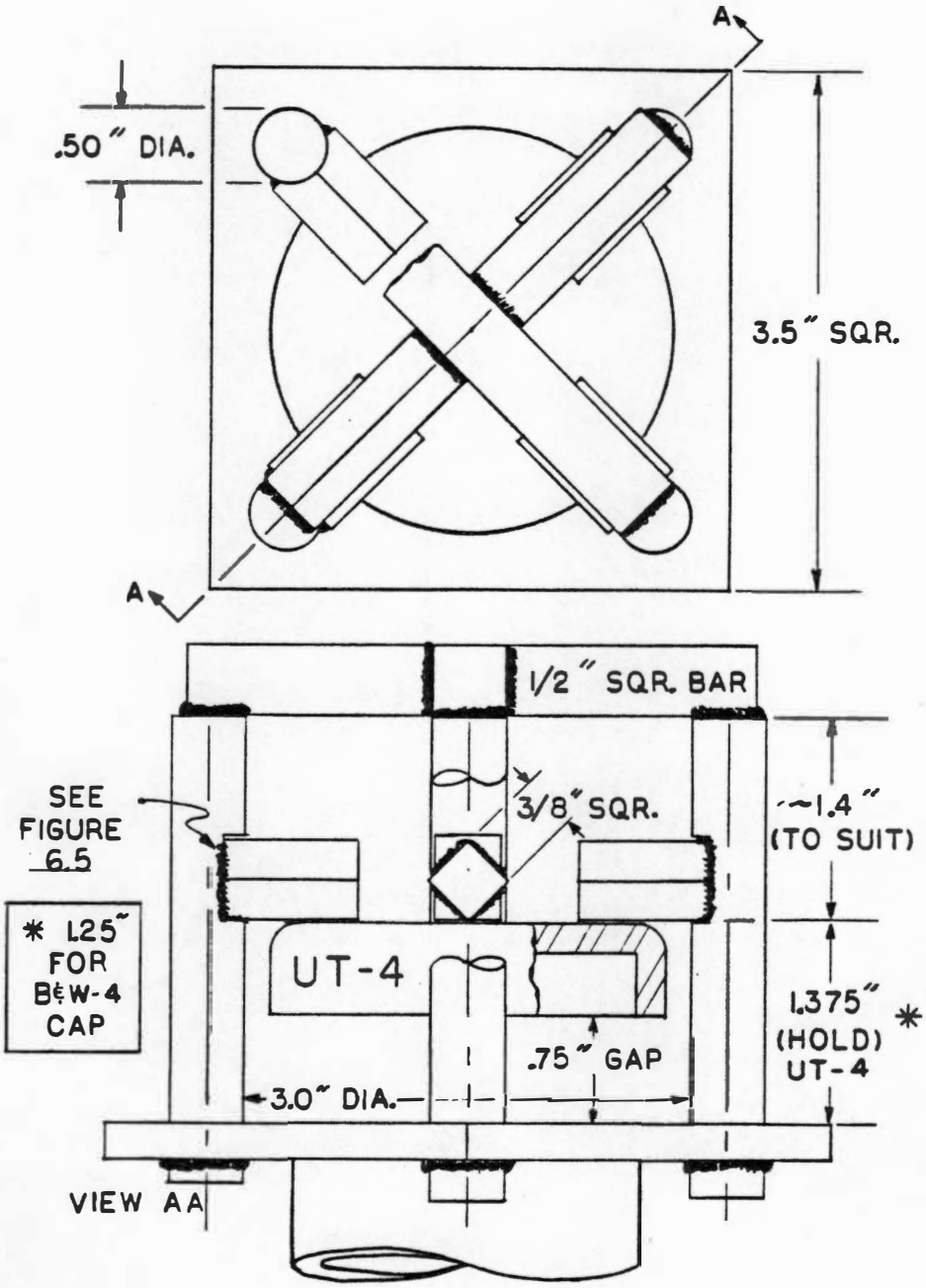

FIGURE 6.4
COAL FEED NOZZLE CAGE—BEDS A-D

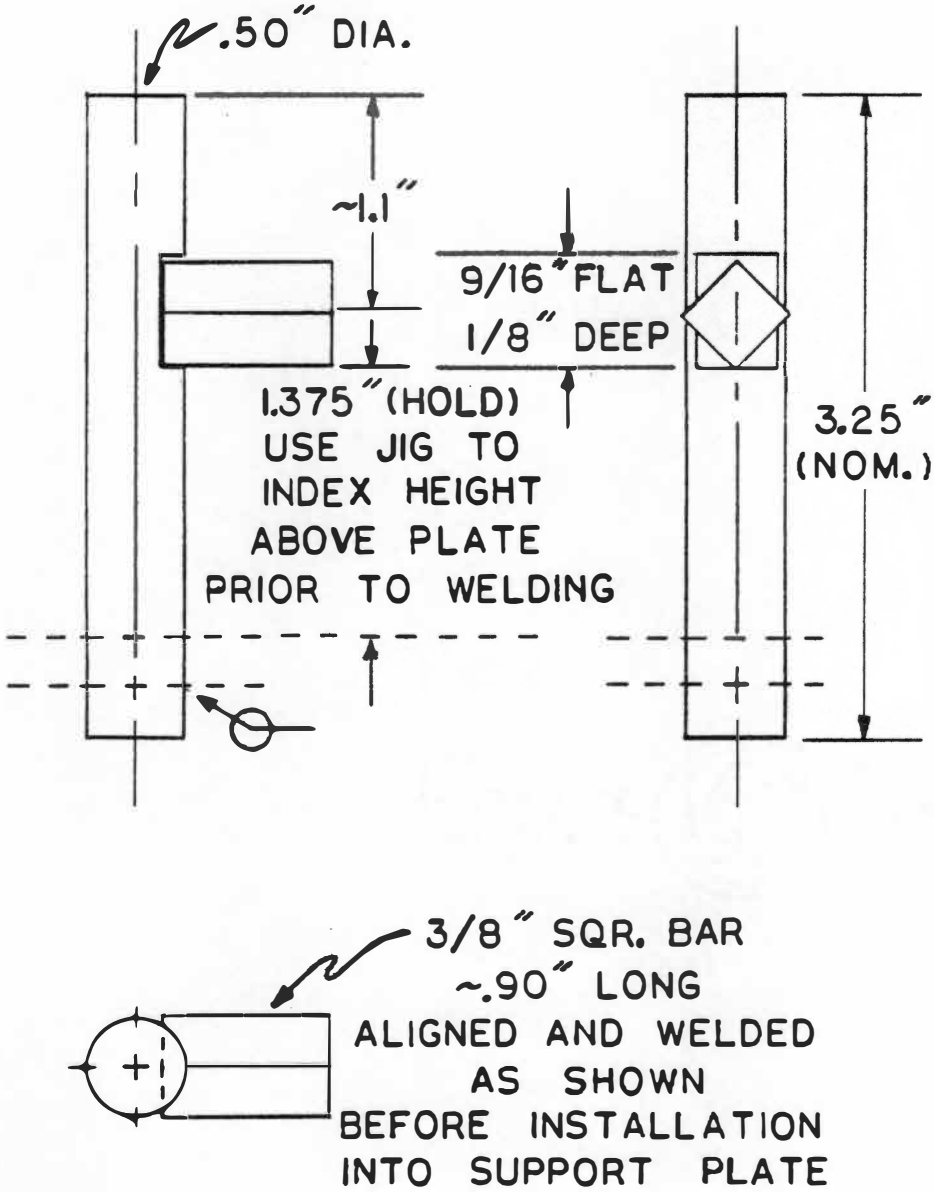

FIGURE 6.5

COAL FEED NOZZLE CAGE: POST ASSEMBLY DETAIL—BEDS A-D

environment (i.e., outside of the boiler). Figure 6.5 outlines the process. Note, the cap must be inserted inside the cage before all cage posts are indexed and welded to the support plate. Finally, the cross top is welded in place and the cage is complete.

Cap/Cage Tests and Results

Wear of the B&W-4 valve caps has been experienced at the TVA 20 MW Pilot Plant as documented in Table 6.1, page 40. A study was initiated to determine the relationship between recess depth and the wear experienced by the B&W-4 and UT-4 caps, Figure 6.3. Based on the previous success of using PVC in determining wear characteristics (turning section tests), floating valve caps of both designs were fabricated from PVC. Two PVC cages were also fabricated as shown in Figures 6.4 and 6.5. In this way, a simultaneous post wear characteristic test was conducted. The wear characteristic testing was conducted at a solids flow rate of 2740 lbm/hr and an air flow rate of 100 cfm. The UT facility was modifed as shown in Figure 6.6. The upstream piping system consisted of 2 inch schedule 80 sections except for a 2 inch schedule 160 section approximately 1.5 feet long immediately upstream of the feed nozzle. As with the PVC turning section wear characteristic testing, limestone was chosen as the solids medium. The use of limestone will not duplicate the operating conditions at the TVA 20 MW Pilot Plant, but will provide a useful wear rate comparison between the two valve caps.

A total of 10 hours of testing was conducted on each cap and periodic mass measurements of the caps were made. The wear results are shown as a plot of material loss versus time in Figure 6.7. A significant difference in the wear rate of the two caps is very apparent. Ater 10 hours, the B&W-4 PVC cap

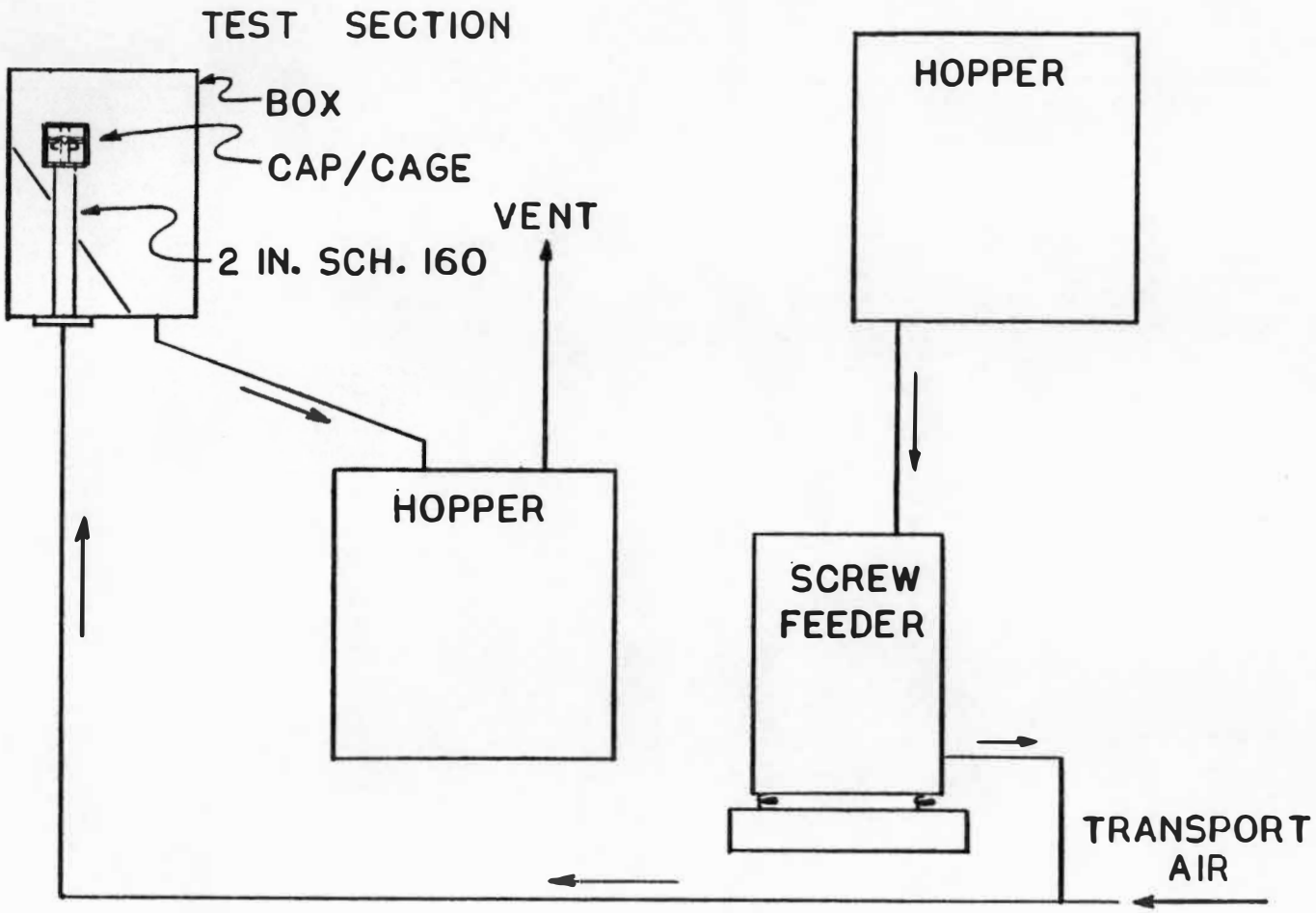

FIGURE 6.6
FLOATING CAP EROSION TEST PIPING SCHEMATIC

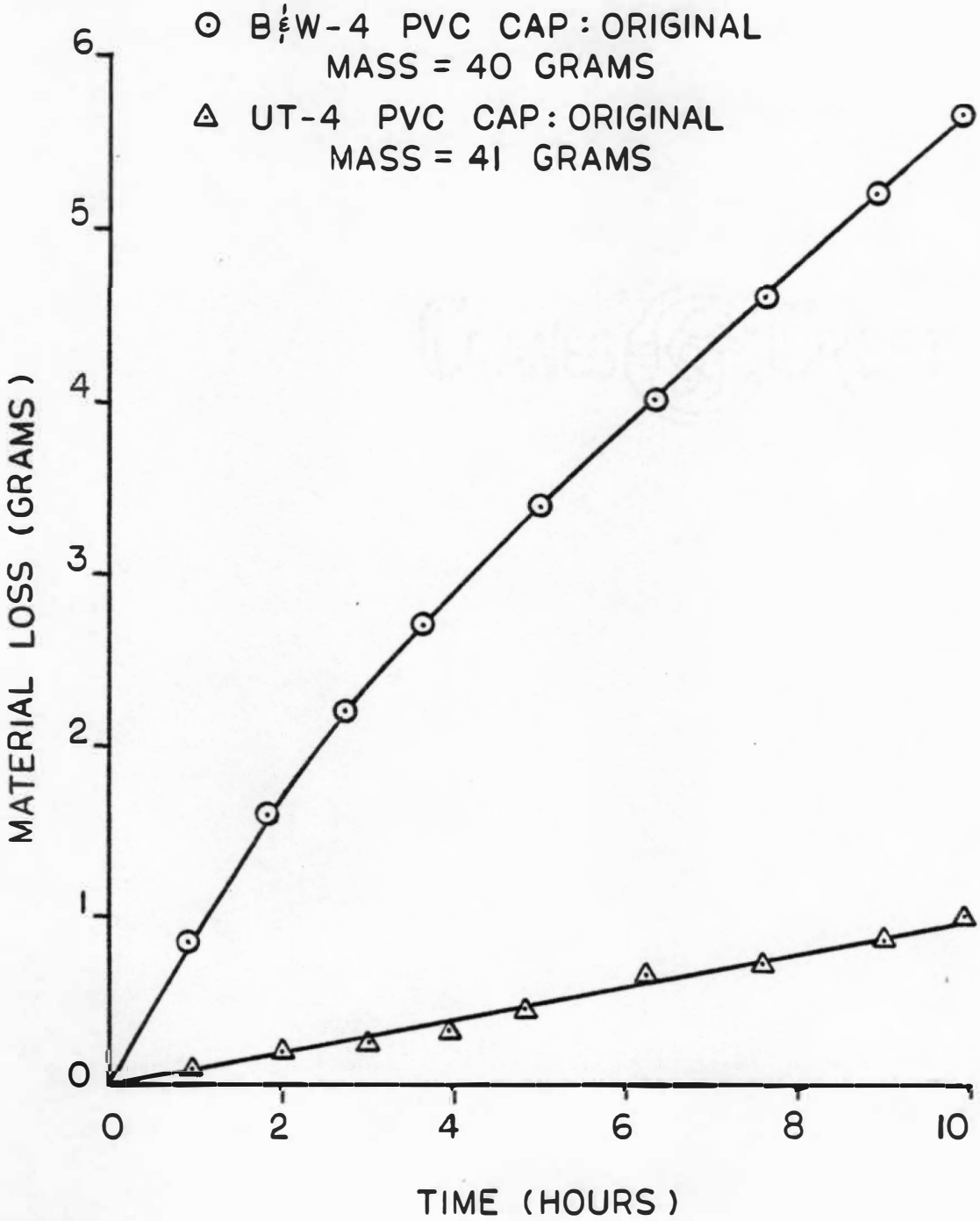

FIGURE 6.7

PVC FLOATING VALVE CAP MATERIAL LOSS

had lost 14 percent of its original mass, while the UT-4 PVC cap only lost 2.4 percent of its original mass. Extrapolation of the wear rate of the B&W-4 PVC cap from Figure 6.7 indicated that the wear rate will continue at approximately the same magnitude for some time to come. The wear will proceed until the depth of the recess has been worn to at least 0.43 inches, since the UT-4 PVC cap shows some slight signs of wear. The minimum thickness of the B&W-4 PVC cap after 10 hours of testing is 0.130 inches, which corresponds to a maximum depth loss of 0.120 inches (see Figure 6.8). This amount of PVC cap wear reasonably corresponds to over 1000 hours of TVA-AFBC Pilot Plant run time.

The UT-4 PVC valve cap shows only slight signs of wear after 10 hours of testing, as indicated in Figures 6.7 and 6.8. The minimum thickness is 0.180 inches, which corresponds to a maximum depth loss of only 0.020 inches. The difference in the magnitude of the wear of the two caps is quite pronounced. A factor of 6 to 7 prevails when comparing mass loss, maximum depth loss, or average remaining cap thickness in high wear areas.

The results of the valve cap wear tests provide positive proof that the wear experienced by the cap is very sensitive to the recess depth of the valve cap. The B&W-4 valve cap has a recess depth of 0.25 inches, but was not sufficiently deep to prevent cap wear. By increasing the recess depth to 0.43 inches, a 70 percent increase, the cap wear was reduced by a factor of 6 to 7.

It is interesting to note that for the 1/2 inch diameter PVC posts, less than 1 percent of the original post mass was lost during the 10 hours of testing with both valve cap designs. A slight indention was observable in the same location as the post wear shown in Figure 6.2, page 42, that was experienced at the TVA 20 MW Pilot Plant. The relative magnitude of PVC post wear to

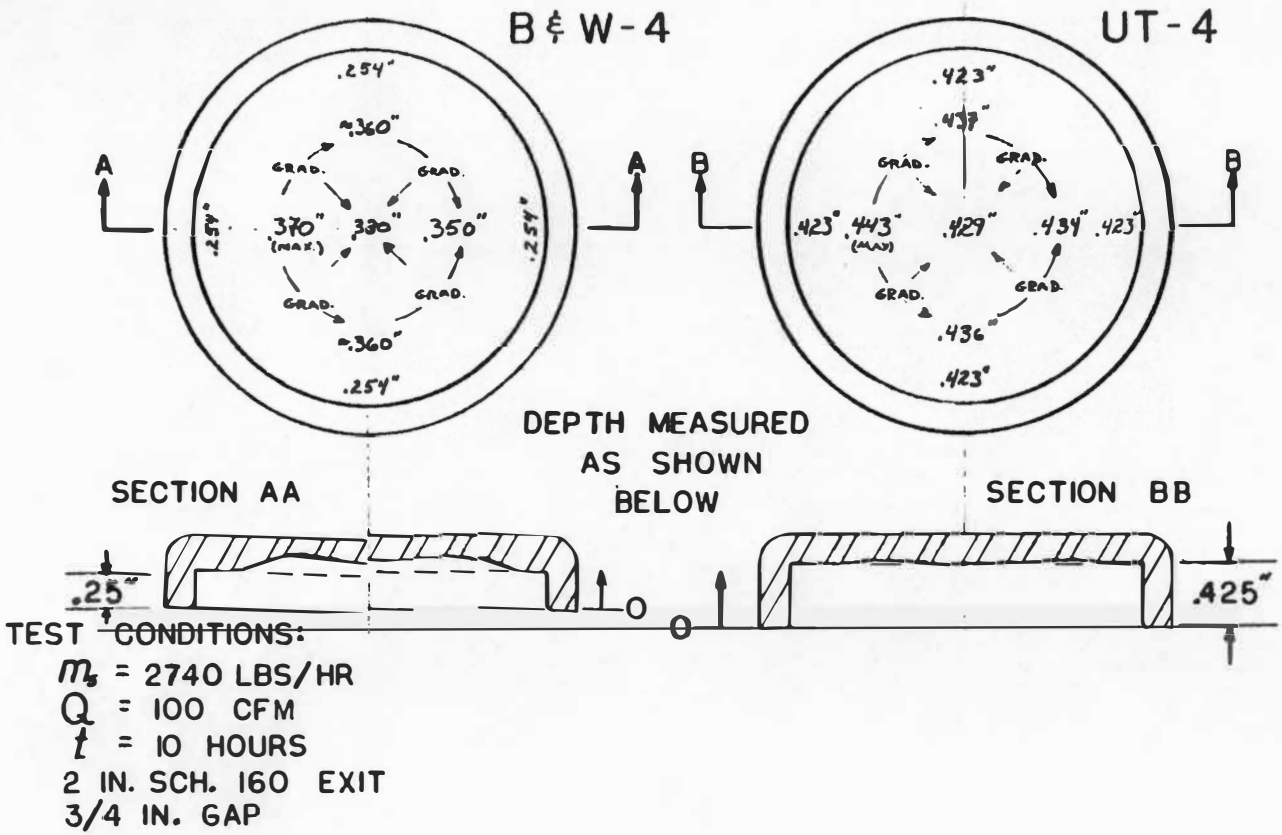

FIGURE 6.8

PVC FLOATING CAP EROSION TEST RESULTS

PVC valve cap wear was significantly less than the relative magnitude of post wear to valve cap wear experienced at the Pilot Plant. Two contributing factors lead to this result. The most influencing factor is the 1/8 inch stellite surface coating the underside of the valve caps. This material is considerably tougher than the steel cage posts. The second factor is the increase in cage post diameter from 3/8 inch to 1/2 inch diameter. This observation strongly suggests that the addition of a stellite surfacing be considered for the cage posts to significantly improve the wear resistance of the posts.

Two additional tests were performed to determine if the modified cage would have any adverse effects on the opening and drainback characteristics of the caps. Both metal caps and a metal cage were built and the cap/cage assembly was inserted in the UT 2 X 2 fluidized bed facility. Air only signature tests were conducted, and as expected, virtually no differences were observed between these tests and previous air only tests conducted in the 4 bar cage with 3/8 inch diameter posts.

A drainback/hangup test for the B&W-4 cap/cage assembly was also conducted. The 2 X 2 bed was filled with 7 1/2 inches of limestone and was operated at an approximate bed superficial velocity of 6 ft/sec. The transport air was pulsed from 0 to 150 cfm numerous times resulting in no drainback in the feedline with the following exception. Slight drainback into the solids feedline did occur on 3 to 4 occasions when the transport air was slowly shut down, allowing a limestone particle to be caught on the rim of the cap. This drainback was easily stopped by supplying a quick pulse of transport air, thus ejecting the trapped particles. At no time did the B&W-4 cap experience hangup in the cage.

Conclusions and Recommendations

The UT-4 valve cap has shown far superior wear resistance compared to the B&W-4 cap. In fact, the UT-4 cap design has reduced the magnitude of wear by a factor of 6 to 7. The air flow only opening characteristics for the UT-4 cap are essentially identical to the B&W-4 cap. For these reasons, the UT-4 valve cap is strongly recommended for future use in the Pilot Plant to determine its performance in an actual AFBC facility. It is also recommended that the cap be stellite surfaced to further increase the life of the cap.

The modified cage is also recommended because of improved design features. The most important being ease of construction, added post life, and a simple reinforcing cross top to prevent post bending.

By using the UT-4 valve cap with a stellite surface, the wear of the cap should be greatly reduced. In fact, wear of the cage post could become a more serious wear problem than the valve cap. The possibility of using a hardened steel or a stellite surfacing should be considered for the cage posts upon initial installation of the cap/cage assembly. The use of the UT-4 cap in combination with the modified cage with hardened posts should greatly improve the reliability of the feed nozzle assembly.

CHAPTER 7

FEEDLINE SPLITTERS

Introduction

Feedline splitters are key components to the TVA AFBC 20 MW Pilot Plant below bed feed system. Feedline splitters provide a means for dividing the transport air and solids feed into multiple exits. In TVA's 20 MW Pilot Plant, feedline splitters are utilized in all aspects of below bed feeding: start up, compartments A-D, and recycle systems. The start up system currently has one main feedline upstream and eight feedlines downstream of the splitter, designated a 1:8 splitter. This designation is used since the flow is divided from a single feedline to eight exit feedlines. This designation will be used throughout this report. The compartments A-D currently utilize 1:3 feedline splitters. The recycle system has recently been changed from a 1:3 splitter to a 1:6 splitter. The UT designed 1:6 recycle splitter became operational March 22, 1984. The total number of main feedline systems required in the TVA 20 MW Pilot Plant is six (one for start up, one each for compartments A-D, and one for recycle). Without feedline splitters, a total of 26 main feedline systems would be required (eight for start up, three each for compartments A-D, and six for recycle). More importantly, 26 F-K pumps and compressors would be required. For a utility sized AFBC plant, around 200 MW, the total number of main feedline systems would increase further. To decrease the number of main feedline systems, a commercial sized AFBC plant may utilize 1:24 feedline splitters.

The most important function of a feedline splitter is the ability to equally divide the solids feed and associated transport air in the main feedline to the exiting feedlines. If the feedline splitter cannot provide this function, poor (unequal) distribution of coal occurs, resulting in cold and hot spots in the bed. The uneven burn rate in the bed diminishes the sulfur capture rate, alters heat transfer rates, and reduces the efficiency of the boiler. Thus, a relatively equal split of the solids feed is imperative to the efficient operation of an AFBC plant. Currently a split equality of $\pm$ 10 percent of the splitter exit feedlines is regarded as acceptable by TVA.

The current feedline splitter design utilized in compartments A-D feed systems in the TVA 20 MW Pilot Plant is shown in Figures 7.1 and 7.2. The splitter was designed by the Fuller company and a brief description was given in an article by Hilbert [28]. An internal cone, Figure 7.2, of the design serves two purposes. First, it provides some control of the flow area (the area seen by the transport air and solids feed), thus maintaining a solids velocity above saltation velocity. Secondly, it directs the solids feed to the exit ports. Internal deflector plates are also included in the design to further decrease the flow area.

As with other feed system components, the feedline splitters at the TVA 20 MW Pilot Plant have experienced extensive wear. Splitters of two different internal cone materials were supplied for erosion comparison. The original splitter cone is shown in Figure 7.2. Originally, compartments A, B, and C splitters had ceramic internal cones while the D splitter internal cone was of steel construction. Early in testing, the compartment A splitter ceramic cone broke and was replaced with a steel cone. During a March 1983 outage, measurements of the splitter cone of compartments A, C, and D were taken

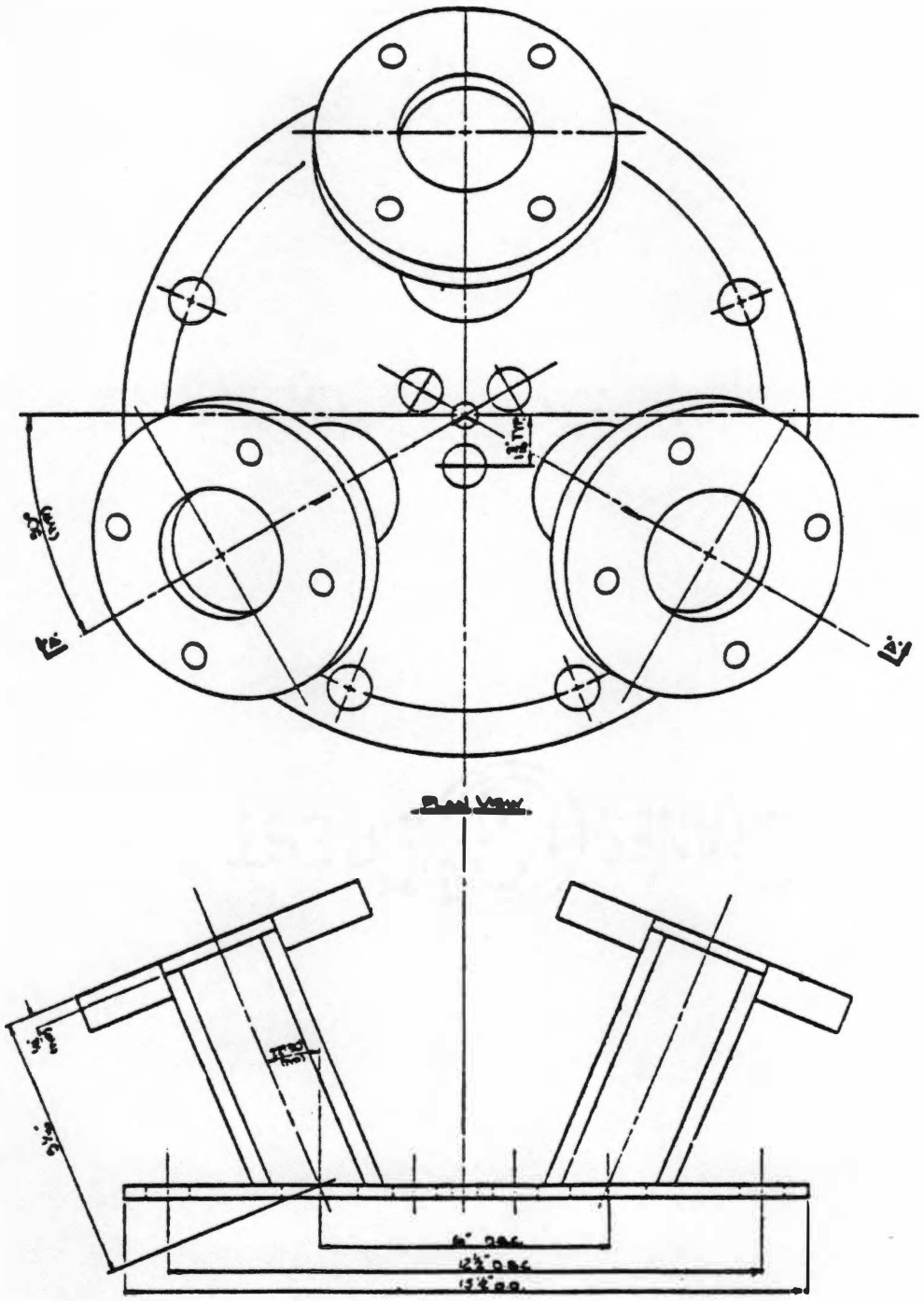

FIGURE 7.1

TVA 20 MW AFBC 1:3 SPLITTER DESIGN

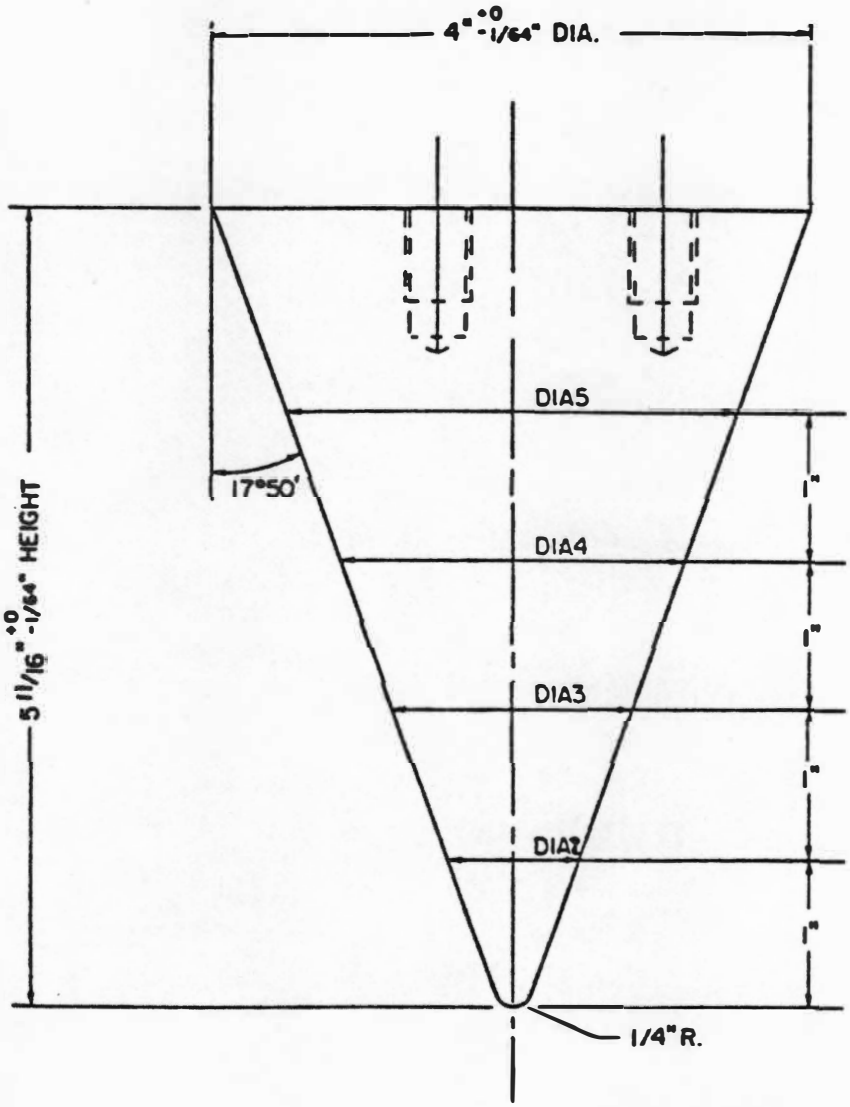

FIGURE 7.2

TVA 20 MW AFBC SPLITTER CONE MEASUREMENT LOCATIONS

and are given in Table 7.1. The wear of the steel splitter cones was quite severe, as nearly 3 inches (over 50 percent) of the cone height had been lost. The large amount of splitter cone wear has an obvious detrimental effect on the reliable and efficient operation of the Pilot Plant. In fact, two serious problems result from the splitter cone wear: increased occurrence of line pluggage, and uneven coal distribution. Before replacement of the compartment D splitter cone, there were numerous line pluggages in the splitter area (19 plugs from February 21 to March 9, 1983). After replacement, the compartment D feed lines plugged only five times for a comparable operating period, nearly a four fold decrease. The pluggage could result from overloading of one or two of the exit feedlines or by the occurrence of saltation from the result of the large increase in flow area. This provided graphic evidence that the severely worn splitter cone was the primary cause for the large number of line pluggages. Also, before replacement of the compartment D splitter cone, one side of compartment D had consistently lower bed temperatures. This indicated that an uneven distribution of coal resulted from the badly worn splitter cone. As a result of the steel splitter cone wear, the compartment A cone was replaced with another steel cone and the compartment D cone was replaced by a ceramic cone.

In comparison, the compartment C ceramic cone had lost only about 8 percent of its original height. However, an equally severe problem with the ceramic cones was experienced. As previously mentioned, the compartment A ceramic cone broke early in testing, and had to be replaced. The compartment B ceramic cone had a portion of its base broken. The fractures could have resulted from attempts to clear pluggages or by thermal shocks caused by the

Table 7.1

TVA Pilot Plant Beds A-D Splitter
Cone Wear Measurements

	Comp A (Steel)		Comp C (Ceramic)		Comp D (Steel)	
	0 hr	1,355 hr	0 hr	1,256 hr	0 hr	1,211 hr
Cone Height (in.)	5.688	2.750	5.750	5.313	5.750	2.875
Cone diameter 2 (in)	.951	0	1.020	.880	1.111	0
Cone diameter 3 (in)	1.642	0	1.635	1.400	1.725	0
Cone diameter 4 (in)	2.312	.250	2.276	2.170	2.360	.425
Cone diameter 5 (in)	2.853	1.250	2.881	2.720	3.004	1.480

drainback of hot bed material. These fractures caused significant problems: the pluggage of exit feedlines with large fractured pieces and unequal splits.

Additional wear problems with the splitters have also occurred. Presently, the exit feedlines of the splitter are oriented in an approximate 25 degree angle off vertical position. Since all the vertical momentum of the solids flow is not lost as it passes through the splitter, wear on the upper side of the exit feedlines occurs. In fact, some of the exit feedines have worn to failure. Also, the internal deflector plates provided to decrease the solids flow area have undergone significant wear.

The problems associated with both the steel and ceramic splitter cones reduced the reliability of the TVA 20 MW AFBC feed system. The currently installed splitters have not shown the durability required for utility operation. The problems with the splitters have occurred after about 1250 hours of operation, about 15 percent of the desired one year (8000 hour) life. For these reasons, a new, innovative design for a pneumatic feedline splitter was sought to provide the reliablity required in a utility sized AFBC below bed feed system.

Design Philosophy

The design of a new feedline splitter for incorporation in any pnuematically transported solids feed system must meet several requirements. The design of the feedline splitter that was conceived by Dr. H. Joe Wilkerson and constructed and tested at UT was tailored to the needs of TVA's 20 MW Pilot Plant facility. However, flexibility in the design exists such that design modifications can be made for implementation in any pneumatically conveyed

solids system that utilizes feedline splitters. The primary design requirements for the feedline splitter are as follows:

1. Must provide fit to existing feed system (ie, the splitter must mate to the upstream and downstream feed piping system).
2. Must function over the operating range of the given pneumatically conveyed solids feed system.
3. Must provide good split equaltiy (TVA's current acceptable split equality range is $\pm$ 10 percent).
4. Must minimize wear (should operate in the range of 8,000 hours before splitter wear effects performance).
5. Must prevent pluggage and saltation.
6. Must provide flexibility in design for enlargement or reduction in size to match changes in operating conditions. This includes the reduction or addition in the number of exit feedlines.

All of these design considerations must be included to provide a reliable feedline splitter that is essential in a pneumatically conveyed solids system.

UT Feedline Splitter Design

Introduction

This section describes the design of a new feedline splitter that was constructed and tested at the UT facility. The purpose of the testing program was to determine if the new splitter design would provide superior operating performance in terms of wear resistance and split equality. If successful, the new splitter design would supply TVA and the industry with a possible replacement to the existing splitters used in the Pilot Plant and in future AFBC facilities. The 1:3 splitter design corresponds to the 1:3 splitters currently

used in TVA compartments A-D feed systems. The results of the testing will be presented and recommendations in subsequent sections will be presented for implementation of a similar designed splitter in the existing compartment D and recycle feed systems in the TVA Pilot Plant.

Design Considerations

The first decisions to be made in the splitter test program were the choice of material for the splitter construction and the solids medium to be used in the testing. The fabrication material chosen for the UT 1:3 splitter was PVC. As with the turning sections and floating valve cap/cage wear characteristic testing, PVC was chosen because of its availability and wear characteristics. The solids medium used in the splitter testing was limestone. It was recognized that the extensive use of limestone in the splitter testing would not fully duplicate operating conditions at the TVA Pilot Plant. TVA currently uses 1/4 inch X 0 inch top size coal particles with a mixture of limestone of 1/8 inch X 0 inch top size. Coal to limestone mass ratios of 1.5 and 2.25 to 1.0 are typical. The wear characteristics of the coal/limestone mixture will most certainly be different than a feed of limestone only. But it was not the purpose of the splitter testing to exactly duplicate the same operating conditions used in the TVA Pilot Plant. Rather, the purpose of the testing was to establish if the new designed splitter would function and to determine the general wear characteristics of the splitter.

Wear prevention was the single most influencing factor in the splitter design. The feedline splitter that was constructed at UT is shown in Figure 7.3. The splitter was designated as the UT 1:3 PVC splitter. The two principle design features of the UT 1:3 PVC splitter were the internal recessed cone and

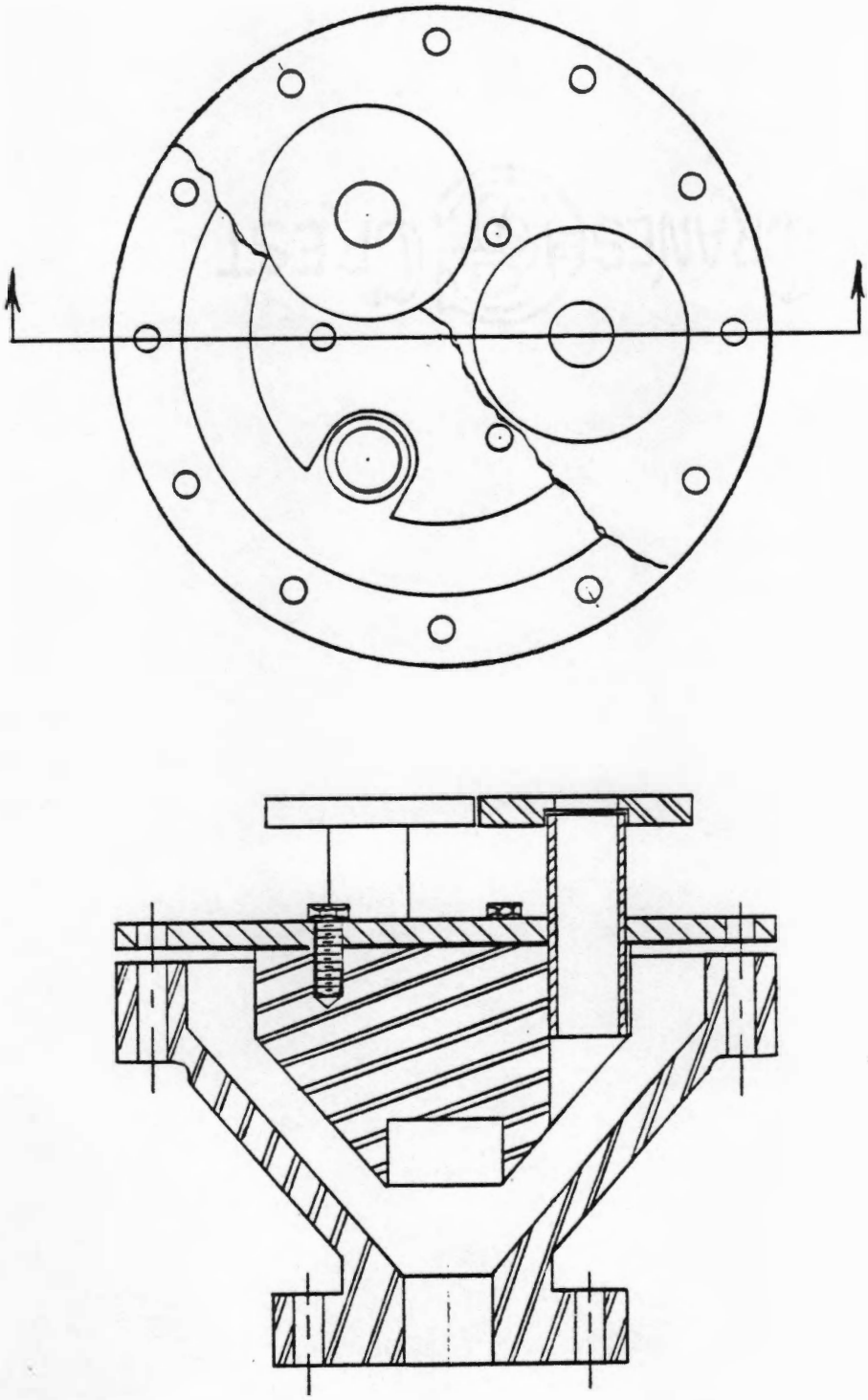

FIGURE 7.3

UT 1:3 PVC SPLITTER FOR WEAR TESTING

the vertical directed exit feedlines. The mechanics of wear reduction of the internal recessed cone were similar to the recessed floating valve caps and the 45 degree wye. Once a solids feed was established, the recess in the cone packs with solid particles and other entering solid particles impact trapped particles in the recess. In effect, a protective buffer layer was established in the recess of the cone which prevented wear of the cone material directly facing the solids stream. With the design change to a recessed internal cone, the wear rate of the internal cone should be significantly reduced. The vertical directed exit feedlines were chosen for wear considerations also. The splitter design enabled an internal turn of the solids to a vertical exit direction with minimal wear to the splitter body. A large void area located vertically above the feedline discharge elevation (in effect, a second recess) shown in Figure 7.3 was the key to wear prevention. This area packed with solid material and thus prevented wear to the upper splitter body. Therefore, the solids can be turned internally with minimal wear of the splitter body, instead of an external turning section where wear has already proven to be a significant problem. The vertical directed exit feedlines also simplify the splitter downstream piping system. Recommendations for the splitter downstream piping system will be discussed in both the TVA compartment D and recycle feedline splitters design sections.

The size and operating test parameters of the UT 1:3 splitter were the next considerations in the design. The operating capabilities of the UT facility restricted the inlet and exit feedline sizes as well as the size of the splitter design. In the TVA Pilot Plant, the compartments A-D splitter inlet pipe size was 3 inch diameter schedule 80. The three exit splitter feedlines were 2 inch diameter schedule 80. The inlet pipe solids mass flow rate was around 4140

pounds per hour (lb/hr) with a transport air supply of 300 cubic feet per minute (cfm). With equal split of the entering flow, the exit feedlines handle a solids flow rate of 1380 lb/hr and a corresponding air flow rate of 100 cfm. The UT facility could not provide either the solids mass flow rate or the air flow rate used at the TVA Pilot Plant. Consequently, a scaledowned splitter was designed.

As discussed in the turning section wear testing, (Chapter 5), two of the most influencing operating parameters on wear rate were the transport velocity and the solids to air mass ratio of the feed system. In order to obtain similar wear rate conditions in the UT 1:3 PVC splitter testing, it was decided to maintain the transport velocity and solids to air mass ratio used at the TVA Pilot Plant.

Several combinations of the UT 1:3 PVC splitter inlet and exit feedlines were studied, with one set best providing a similar operating range that also complimented the UT facility. A UT 1:3 PVC splitter inlet size of 2 inch diameter schedule 80 and exit feedlines sizes of 1 1/4 inch diameter schedule 80 were chosen. This combination of feedline sizes provided a very close comparison of transport velocity between the UT and TVA feed systems. The solids to air mass ratio nearly equaled that used at the TVA Pilot Plant. Table 7.2 summarizes the operating parameters used in both the TVA and UT facilities and Table 7.3 shows some appropriate scale factors.

Once the splitter's inlet and exit feedlines were sized, the main splitter body and internal recessed cone could be designed. The most important design parameter was the flow area progression through the splitter body. The flow area was defined as the area seen by the transport air and solids feeds. The flow area was a crucial parameter, since the transport velocity is inversely

Table 7.2

Operating Comparisons Between TVA and UT Feed Systems

TVA Beds A-D	UT 1:3 PVC Splitter
Upstream of Splitter	
3 in. diameter pipe Sch. 80	2 in. diameter pipe Sch. 80
M (solids) = 4140 lbm/hr	M (solids) = 1863 lbm/hr
Air Flow Rate = 300 cfm	Air Flow Rate = 135 cfm
Transport Velocity = 109.0 ft/sec	Transport Velocity = 109.7 ft/sec
Downstream of Splitter	
2 in. diameter pipe Sch. 80	1 1/4 in. diameter pipe Sch. 80
M (solids) = 1380 lbm/hr	M (solids) = 621 lbm/hr
Air Flow Rate = 100 cfm	Air Flow Rate = 45 cfm
Transport Velocity = 81.3 ft/sec	Transport Velocity = 84.2 ft/sec

Table 7.3

Scale Factors Between TVA and UT Feed Systems

Feed System Parameter	UT to TVA Feed System Ratio
Splitter Inlet Pipe Area	0.447
Splitter Exit Pipe Area	0.434
Solids Mass Flow Rate	0.450
Volumetric Air Flow Rate	0.450

proportional to the flow area. The strong influence of transport velocity to wear rate was clearly demonstrated in the turning section wear tests (Chapter 5). In fact, the wear rate was approximately proportional to the cube of the transport velocity. Thus, a low transport velocity is desirable from a wear rate perspective. However, the transport velocity must be maintained safely above the solids feed saltation velocity. An estimation of the flow area and corresponding transport velocity was conducted for the UT 1:3 PVC splitter design that resulted in an operating region that prevented saltation and minimized wear. The calculation of the flow areas for the UT 1:3 PVC splitter will be discussed later.

There were several other considerations in the UT 1:3 splitter design. Reference Figure 7.4 as needed for definitions of distances and angles described below. The perpendicular distance between the main splitter body and the recessed cone, designated as the gap, needed to be approximately three times the maximum particle size to prevent pluggage. The vertical distance between the inlet of the splitter body and the recess opening plane of the internal cone, designated as recess height, needed to be approximately an inch; again, due to pluggage concerns. Another design consideration was the determination of the recess diameter of the internal cone. The solids flow spreads outward upon entering the splitter body, designated as the spread angle. To prevent excessive wear of the internal cone, the recess diameter must be enlarged to include this effect. Prior experimentation has shown the spread angle to be approximately 10 degrees. Using a 10 degree spread angle, the recess diameter can be computed once the recess height was set. The outside diameter of the internal cone must accomodate three exit pipe penetrations and must be of sufficient diameter to prevent exit feedline flange

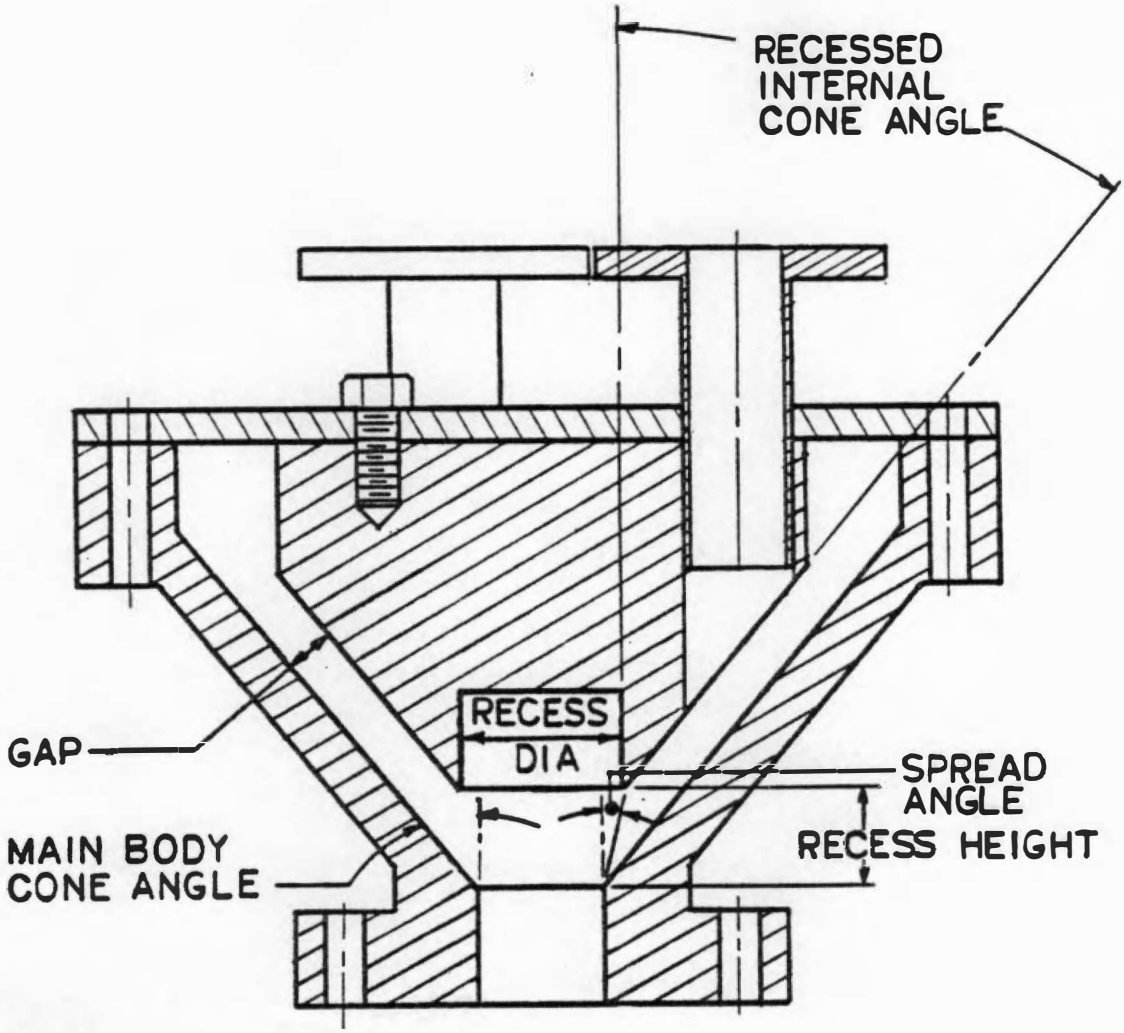

FIGURE 7.4

SPLITTER NOMENCLATURE

interference. With the exit feedline pipe and flange size set, the minimum top diameter of the internal cone could be determined. A final design parameter to be considered was both the splitter main body and internal cone angles. Any reasonable internal cone angle could be used to meet the recess and outside diameter requirements that did not result in an excessively tall splitter. The splitter main body angle was chosen to equal the internal cone angle, thus providing parallel surfaces for the solids flow path boundary.

All the factors including the gap, recess height, main splitter body and internal cone angles, and the recess diameter effect the flow area. An estimation of the flow area through the splitter body was needed in order to compute a theoretical transport velocity. The flow area was computed as follows (further detail in Appendix A): first, the solids flow was taken to flow in a parallel path to the walls of the main splitter body and recessed cone. Therefore, the flow area at any given elevation would be the surface area of a frustum of a cone. The gap between the recessed cone and main splitter body served as the slant height for the furstum of the cone. Several combinations of design parameters were studied, and it was concluded that a 0.75 inch gap, a recess height of 1.5 inches, and a 40 degree cone angle for both the main splitter body and recessed cone would result in satisfactory flow areas. A recess diameter of 2.5 inches was chosen along with a 10.6 degree spread angle. A sample calculation of the flow area is shown in Appendix A for this combination of design parameters.

Once the flow areas had been computed, the transport velocity could readily be calculated. The transport velocity was computed based on an operating air flow rate of 135 cfm. Figure 7.5 shows the flow area and transport velocity for the UT 1:3 PVC splitter. As stated earlier, the transport

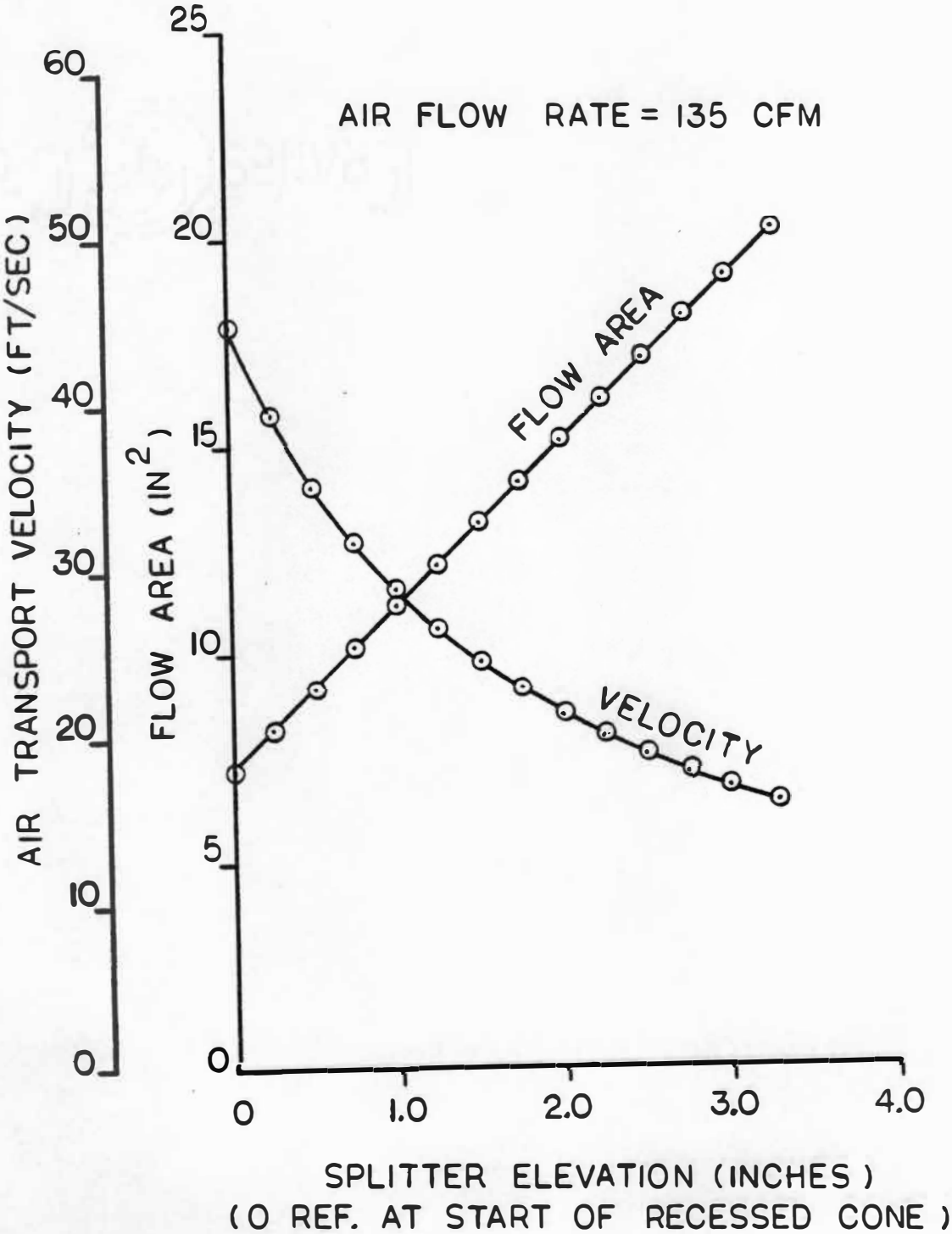

FIGURE 7.5

UT 1:3 PVC SPLITTER FLOW AREA AND TRANSPORT VELOCITY

velocity was the key parameter in the operation of the feedline splitter. Low transport velocity is desirable to reduce wear, but the transport velocity must be maintained above the solids feed saltation velocity.

The saltation velocity for limestone was estimated to be 40 ft/sec (reference Chapter 4). From Figure 7.5, it is seen that the theoretical transport velocity for the UT 1:3 PVC splitter drops below 20 ft/sec near the discharge exit plane. This is an extremely conservative estimate for two reasons. First, in estimating the transport velocity, 100 percent of the flow area was used. In actual operation, portions of the annulus area between the exit ports will be partially packed with solid material, thus reducing the effective flow area. Secondly, the solids transport has a large vertical momentum. The total vertical flow dimension through the main splitter body is only 3.5 inches, thus the flow will not have sufficient time to reach the uniform transport velocity predicted from the flow area calculation. For these reasons, the occurrence of saltation during operation of the UT 1:3 PVC splitter was not a major concern. However, if saltation did occur, modifications to the splitter body would be made to reduce the flow area.

The assembled UT 1:3 PVC splitter is shown in Figure 7.3, page 64. The remaining design drawings for the UT 1:3 splitter are shown in Figures 7.6 through 7.8. Of interest is the manner of construction used to fabricate the UT 1:3 PVC splitter. A solid 15 inch diameter cyclinder of PVC one foot tall was not readily available and was costly. For this reason, it was decided to laminate 1/2 inch thick PVC sheets to form the main splitter body. The waste material from making the main splitter body was used to construct the recessed internal cone.

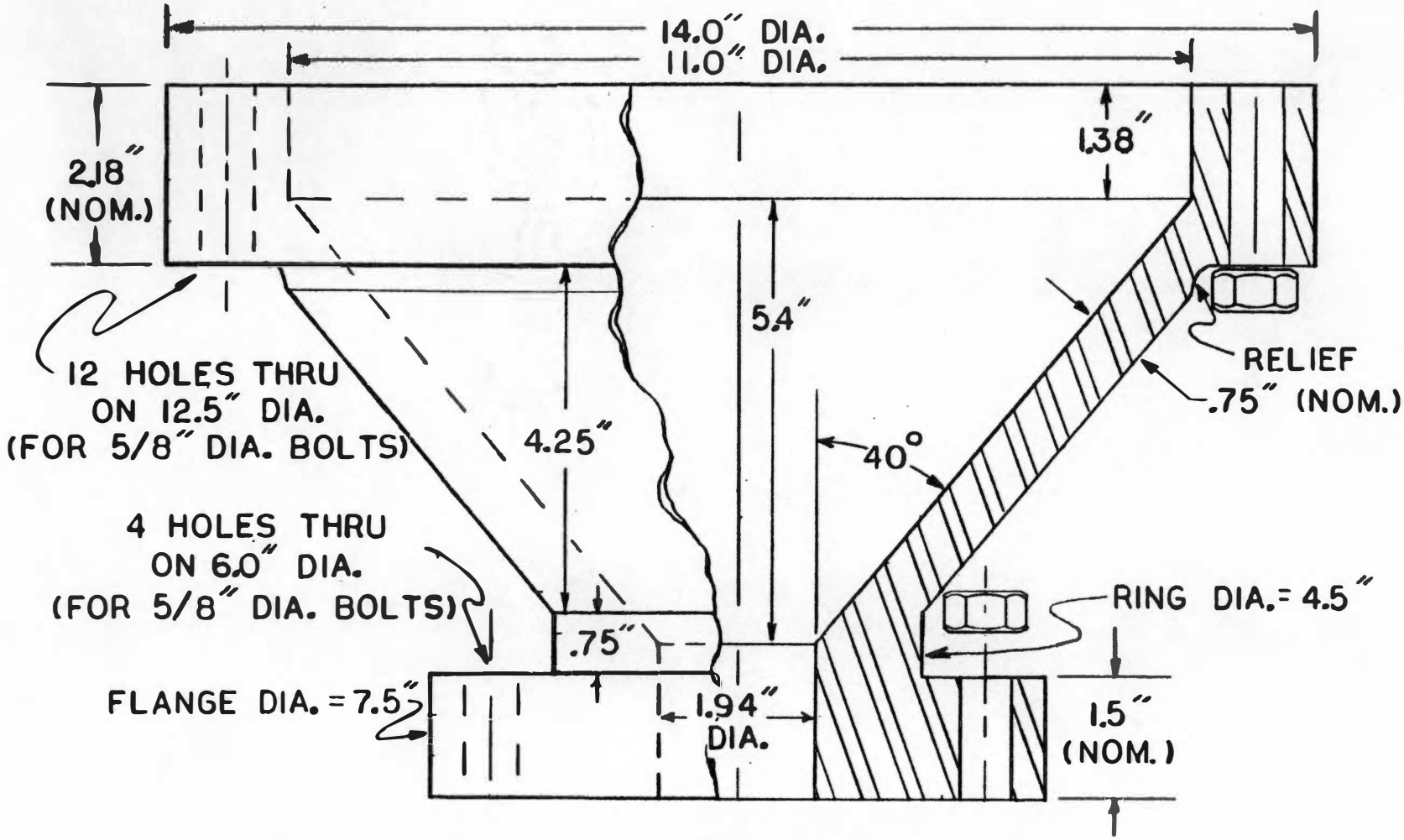

FIGURE 7.6
UT 1:3 PVC MAIN SPLITTER BODY

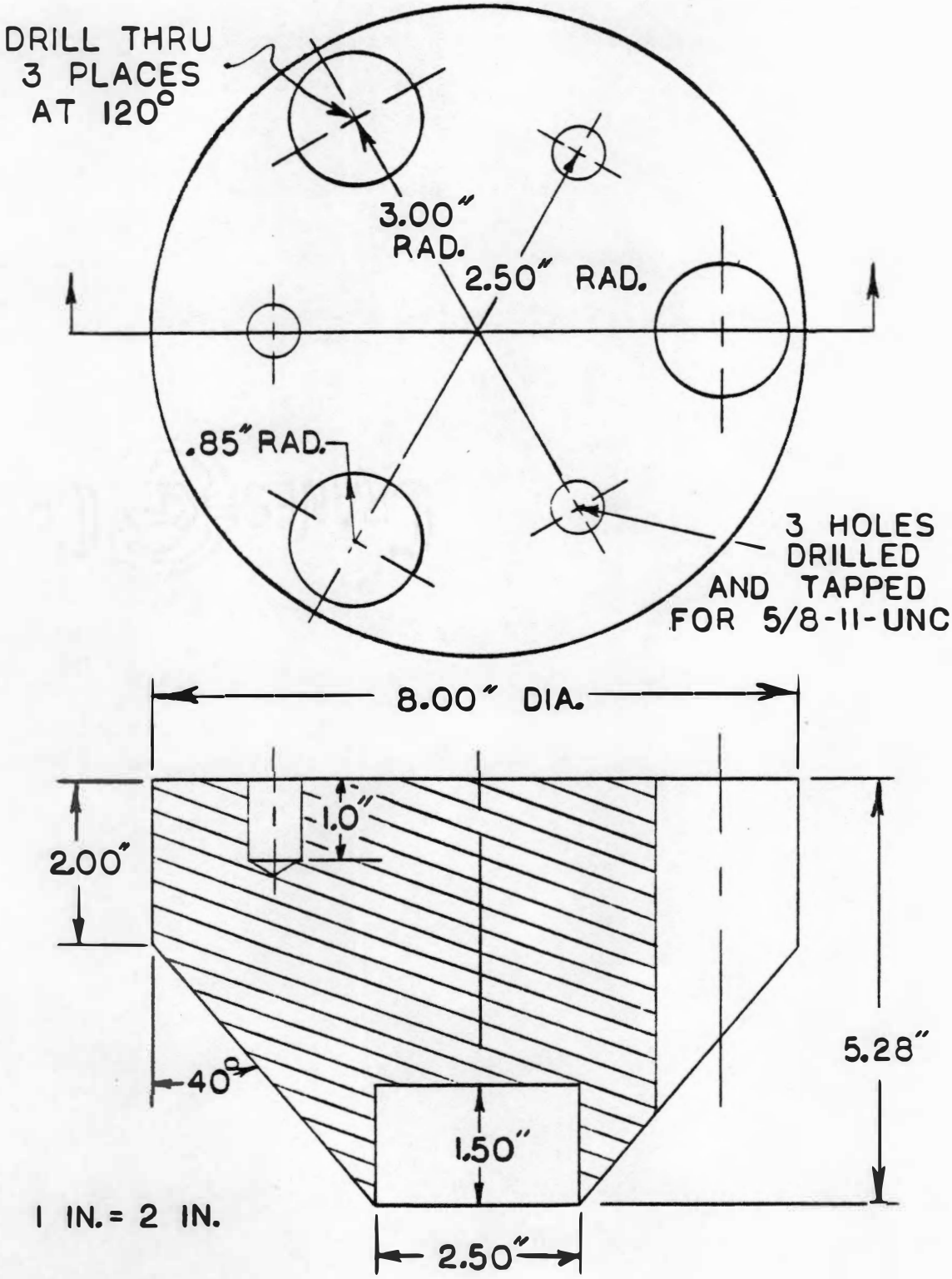

FIGURE 7.7

UT 1:3 PVC RECESSED SPLITTER CONE

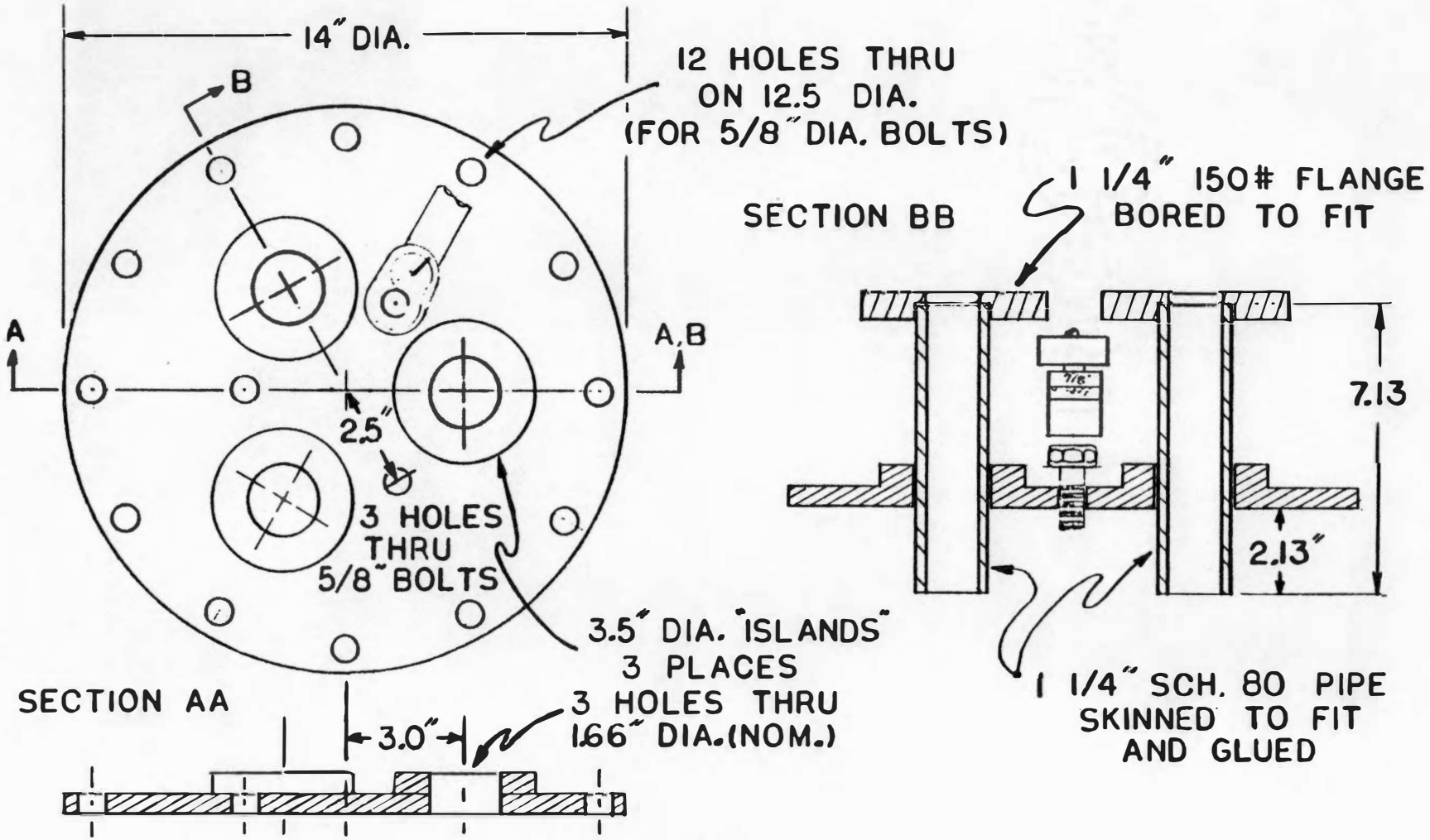

FIGURE 7.8

UT 1:3 PVC SPLITTER TOP ASSEMBLY

Experimental System

Changes to the UT facility were conducted for the UT 1:3 PVC splitter testing program. Figure 7.9 is a schematic representation of the UT facility during the splitter testing. Basically, the limestone was injected into the main feedline piping system by a vibra screw metering feeder. The building air supply furnished the desired air to transport the limestone through the splitter and into three storage drums. The transport air was vented from the storage drums to the plexiglass bed and up to the baghouse and finally to atmosphere. The three splitter exit feedlines and the storage drums were painted blue, yellow, and red for clarity.

The vertical section upstream of the splitter was 2 inch schedule 80 PVC pipe with a total length of 113 inches, corresponding to a length to diameter (L/D) ratio of 58. This L/D ratio equaled that currently used in compartments A-D at the TVA Pilot Plant. The three vertical exit feedlines downstream of the splitter were 1 1/4 inch schedule 80, 70 inches long, or an L/D ratio of 55. Each feedline were coupled to a 45 degree wye, which was coupled to a 1 1/2 inch flex hose that emptied into one of the three storage drums. The flex hose lengths were varied from 40 to 108 inches, or an L/D ratio of 27 to 72, respectively.

During the splitter testing, several operating parameters were monitored. The most important of these were the air flow rate in cubic feet per minute, the mass flow rate in pounds per hour, and the total time of the test in minutes. The measurement of the air flow rate was described in Chapter 4. By weighing each storage drum and using the known test time, the actual mass flow rate for each test was computed.

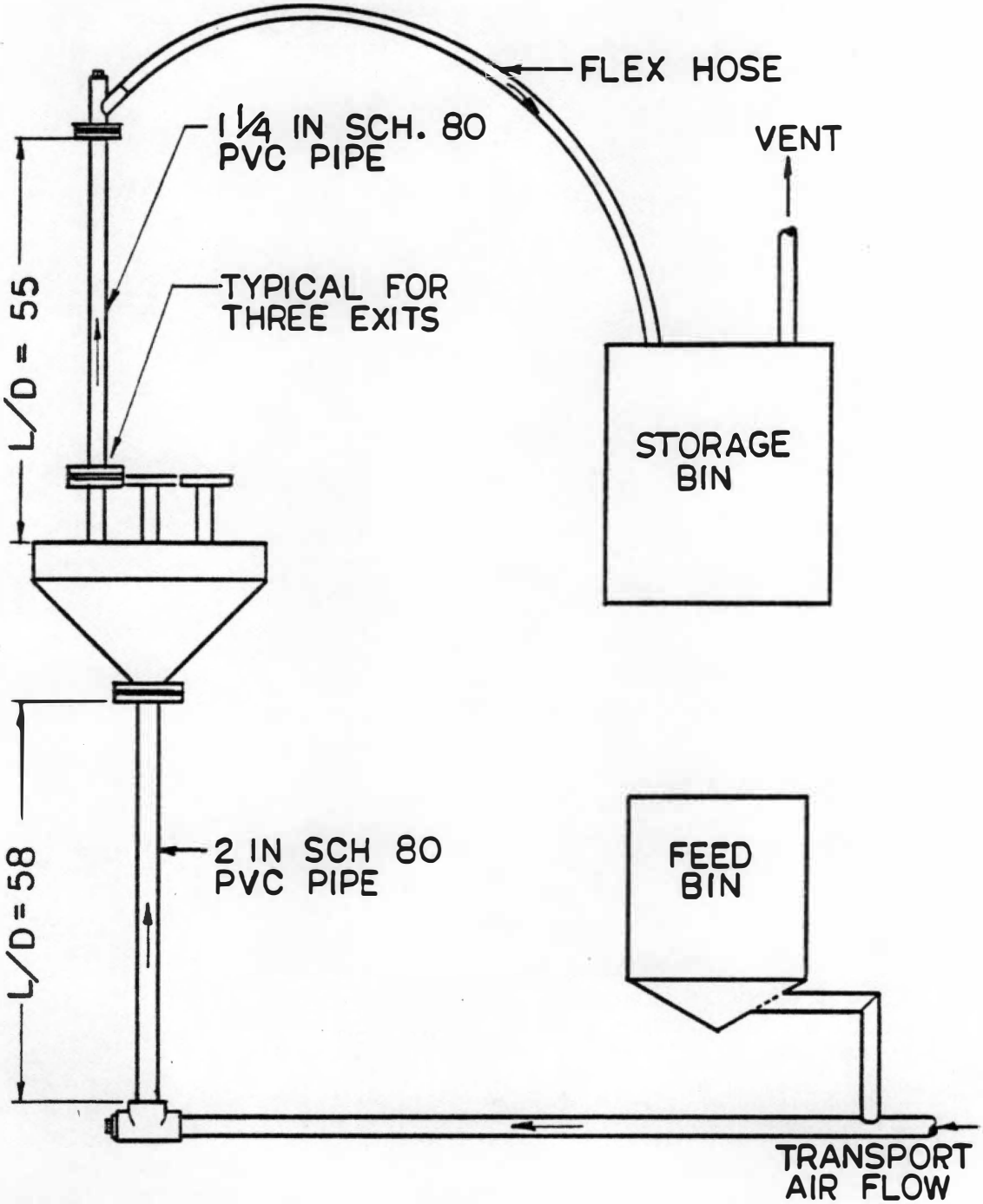

FIGURE 7.9

UT 1:3 PVC SPLITTER TEST CONFIGURATION

Several pressure taps were included in the experimental set up. The pressure taps were located at the bottom and top of the vertical inlet feedline to the splitter, just downstream of the three exit feedlines flange connections, in the storage drums, and in the plexiglass bed. These pressure tap locations allowed direct measurement of the following pressures: the line pressure at the top and bottom of the vertical inlet feedline, the pressure just downstream of the splitter in any or all of the exit feedlines, the storage drum pressure, and the plexiglass bed pressure. The following pressure drops could be measured: the vertical inlet feedlines pressure drop, the splitter pressure drop based on any exit feedline, the exit feedline pressure drops, and the vent line pressure drops. The pressures and pressure drops were measured with a vertical bank of manometers.

Test Results

The original UT 1:3 PVC feedline splitter had a natural dark grey color. Before the splitter testing began, the inside of the main splitter body, the recessed internal cone, and the splitter top were painted with a bright color. This provided a means for observing initial wear areas in a very short operating time. A bright orange color paint was chosen to provide a high contrast from the dark gray PVC material. Based on painted turning section test results, wear areas were noticable after 5 minutes of testing.

The purpose of the first test performed on the UT 1:3 PVC splitter was to establish that the splitter would function and to disclose initial wear areas in the splitter body. The test duration was 4 minutes, with a mass flow rate of nearly 3400 lb/hr and an air flow rate of 150 cfm, corresponding to a solids to air mass ratio of 4.7. The results of the test were quite revealing and

promising. The only area of wear noticeable was a small ring located on the inside of the main splitter body. This wear area was located at an elevation just below the recess height. The wear resulted from the rebounding of limestone particles after impacting trapped particles in the recess. It was also noticed that the base of the recess had worn. However, this wear was not representataive of normal operating conditions. Before the acutal test started, the feed system was checked for air leaks using air flow rates up to 200 cfm. During these air leak tests, stray limestone particles were entrained in the transport air. There were not sufficient limestone particles to pack the recess area, and consequently, the stray limestone particles wore the base of the recess. Before continuation of testing, the recess area, and only the recess area, was repainted to prove or disprove this theory.

After completion of the first test, the three storage drums were weighed to determine the split equality and the mass flow rate. The split equality is expressed as a percentage computed in the following manner. The combined weight of the three storage drums was calculated, and an average weight was computed. The split equality for any one of the three exit feedlines was the difference in weight of limestone in the respective storage drum from the average weight, divided by the average weight. For the first 4 minute test, the split equality ranged from +1.3 percent to -1.0 percent.

The remainder of the UT 1:3 splitter tests were approximately 20 minutes in length and a total of 10 hours of testing was logged. There were two primary objectives in the remainder of the splitter testing. First, a periodic observance of the splitter wear was made. Secondly, the split equality was computed. Also of interest was the effect of varying feedline lengths on split equality. The change of feedline lengths was made by varying

the lengths of the flex hose that coupled the 45 degree wyes to the storage drums.

The splitter was disassembled periodically to observe the progress of wear. Pictures of the splitter are shown in Figures 7.10, 7.11 and 7.12, after 0.4, 2 and 10 hours of testing, respectively. The operating parameters for the majority of testing were solid mass flow rates ranging from 1900 to 2000 lb/hr and air flow rates of 135 cfm. These operating conditions correspond to solids to air mass ratios of 2.97 to 3.12, respectively. Exceptions to these operating conditions will be noted where applicable. After 0.4 hours of testing, Figure 7.10, the small ring of wear evident from the first 4 minute test had approximately doubled in size. A very small area of wear was also present around the internal rim of the recess. Surprisingly, no wear areas were present along the outside of the internal cone. Evidently, a relatively stagnant boundary layer of limestone was present along the outside of the internal cone. The most active region, and therefore the highest wear area, was located on the inside of the main splitter body in a region surrounding the recess height elevation. Again, this wear area resulted from solid particles rebounding off packed solid material in the recess. It was notable that the base of the recess had not been worn, thus providing proof that the wear of the base of the recess from the first 4 minute test could be ignored.

After 2 hours of testing, Figure 7.11, the ring of wear had more than doubled in size and patches of wear extending outward from the ring were noticeable. The orientation of the patches correspond to the exit feedlines orientation. Another area of wear was present along the inside lip of the recess. The base of the recess showed that wear had begun due to the numerous test starts and stops. The only other sign of wear was present along

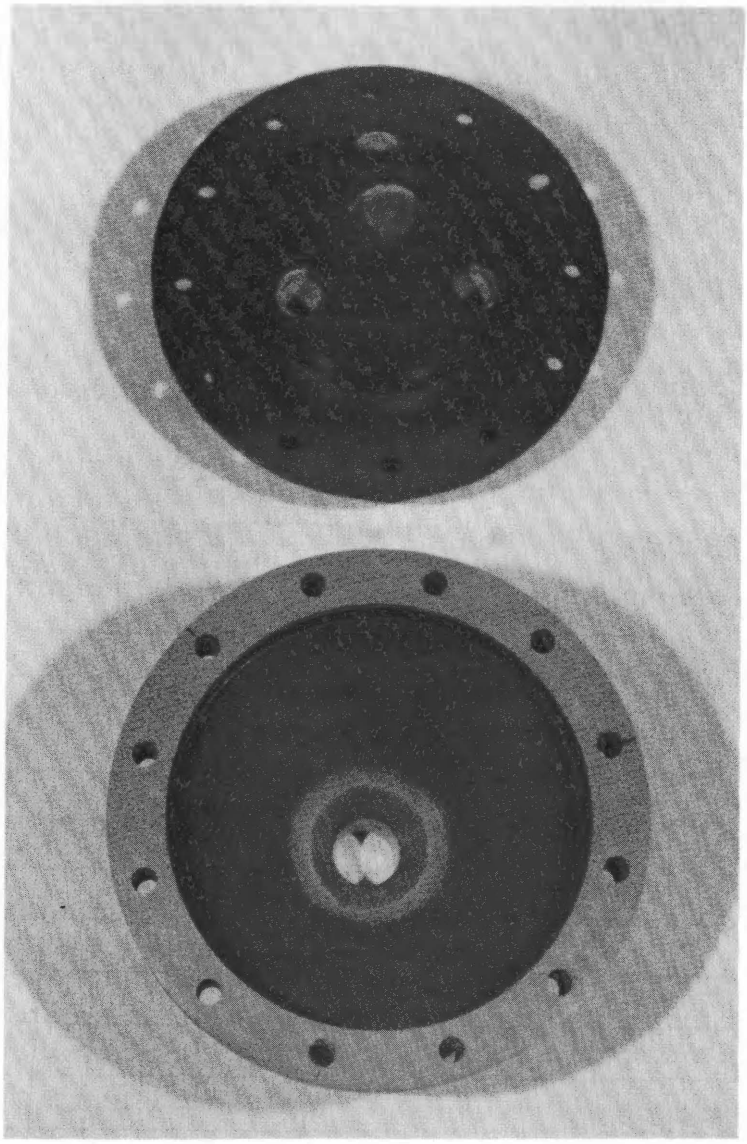

FIGURE 7.10
UT 1:3 PVC SPLITTER WEAR AFTER 0.4 HOURS TEST TIME

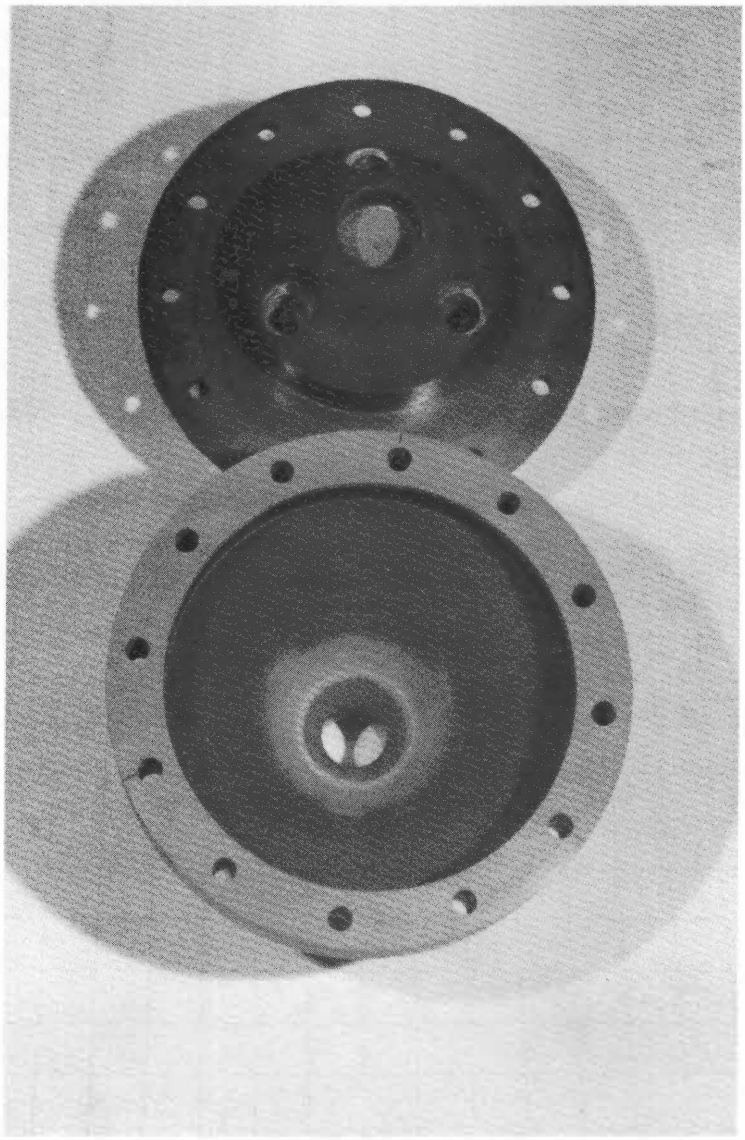

FIGURE 7.11
UT 1:3 PVC SPLITTER WEAR AFTER 2 HOURS TEST TIME

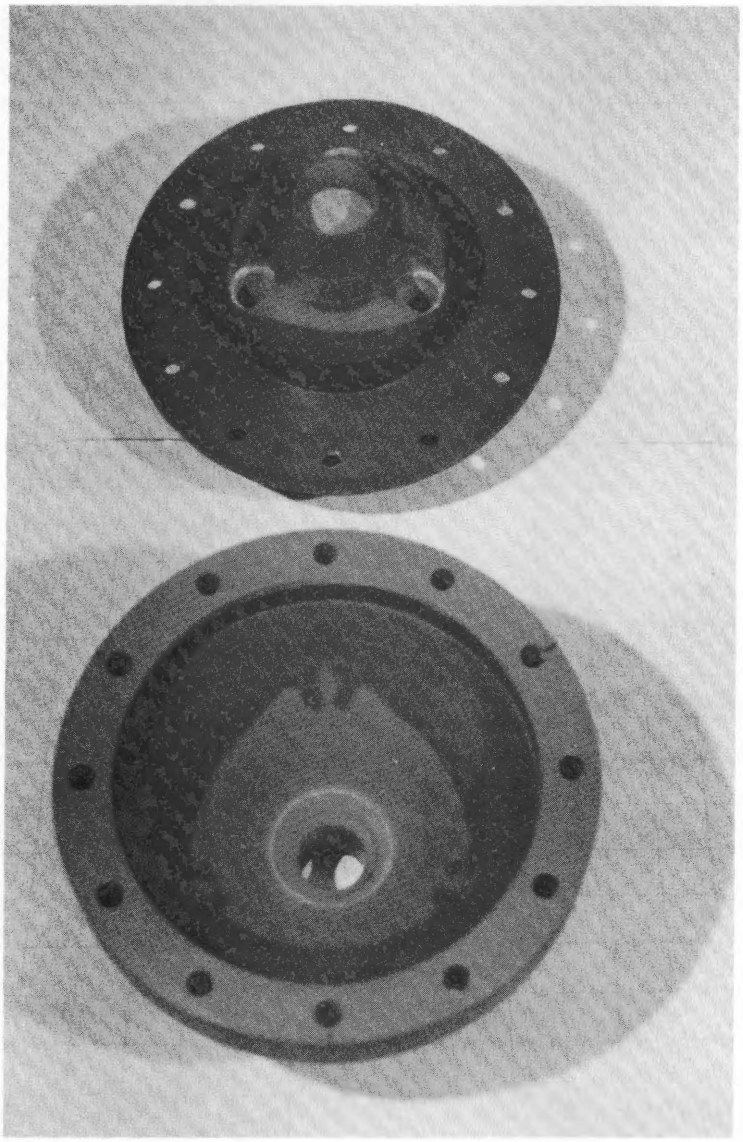

FIGURE 7.12
UT 1:3 PVC SPLITTER WEAR AFTER 10 HOURS TEST TIME

the rim of the exit feedlines. Again, no wear was present along the outside of the internal cone. It should be emphasized that the wear present was limited to paint wear only. No wear of PVC material had occurred.

After a total of 4 hours of testing, the ring of wear on the inside of the main splitter body had grown in size. The patches extending from the ring were more pronounced. The wear on the inside rim of the recess had progressed. The base of the recess had completely worn due to the numerous test starts and stops except at the outside edge. The wear of the rims of the exit feedlines was continuing and wear was also noticeable along the walls of the three exit holes of the internal cone. For the first time, a small area of wear was present on the outside surface of the internal cone. This wear was limited to a small line located approximately an inch below the elevation of the exit feedlines. Again, no wear of PVC material had occurred.

Figure 7.12 shows the splitter wear results after 10 hours. The wear on the inside of the main splitter body had progressed. Worn patches extending from this region were present and were oriented in the same configuration as the exit feedlines. Wear on the inside walls of the recess was nearly complete, and wear on the outside surface of the internal cone had proceeded.

From Figure 7.12 it can be seen that no wear had occurred on the top plate nor on the outside surface of the internal cone located vertically above the feedline exits. The reason for the absence of wear in this area was due to solids packing, as described earlier. This stagnant area in the UT 1:3 PVC splitter design was unneccessarily large. A reduction in the size of the stagnant region would reduce the possibility of pluggage, with no reduction in wear resistance.

The most significant result from the 10 hours of testing was that the wear was limited to paint wear only. No wear of PVC material had occurred. In comparison, long radius PVC elbows of 3/16 inch wall thickness wore to failure in as little as 5 hours. The 45 degree PVC wye turning section tests showed a wall thickness reduction of around 10 percent in a total of 10 hours of testing. From these test comparisons, it can be concluded that the new designed feedline splitter resulted in a splitter that was very resistant to wear.

As previously mentioned, the split equality was also of primary importance to the successful operation of a feedline splitter. Feedline lengths were varied to determine the effect of different feedline lengths on split equality.

Several combinations of feedline lengths were tested and the results are shown in Figure 7.13 as a plot of split equality in percent versus feedline length difference from the average length in percent. The split equality was computed in the exact manner as described for the first 4 minute test. The feedline length difference percentage was calculated in the following way. The combined length of all three downstream splitter feedlines was computed, and an average length was calculated. The feedline length difference percentage for any of the three exit feedlines was the difference in length of the respective feedline from the average length, divided by the average length. As Figure 7.13 shows, the feedline length difference percentage was tested over a range from -13 to +25.4 percent. With equal feedline lengths, the split equality ranged from approximately +5 to -4 percent, well within the acceptable $\pm$ 10 percent criteria. In fact, only one test fell outside of the $\pm$ 10 percent range. This occurred with one exit feedline length difference percentage equalling 25.4 percent, and with the other two exit feedline length

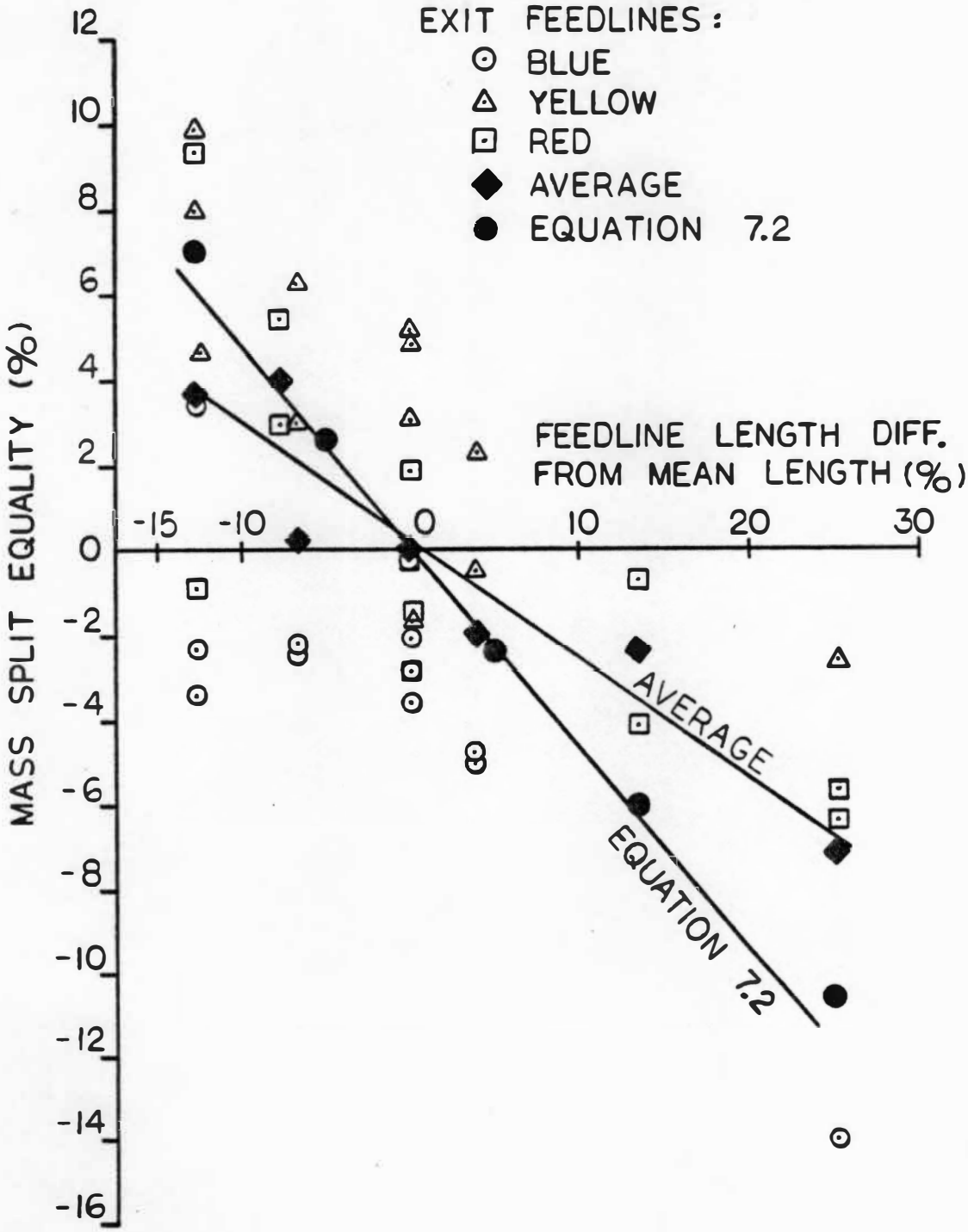

FIGURE 7.13

UT 1:3 PVC SPLITTER SPLIT EQUALITY RESULTS

difference percentages just above -13 percent. For this particular combination, the split accuracy ranged from +9.4 percent to -14.1 percent.

Table 7.4 summarizes the operating parameters and test results used to construct Figure 7.13. An average split equality was calculated for each feedline length difference percentage from the data in Table 7.4. A least squares curve fit was conducted from these average values and both the average values and curve are shown on Figure 7.13. The curve fit equation is linear over the range of values tested and is given below in an expression of percent split equality (S.E.) as a function of feedline length difference percentage (F.L.)

$$\Delta S.E. = -0.2806 \times \Delta F.L. + 0.2228 \qquad 7.1$$

Another approach to estimate the split equality was conducted based on a multiple parallel flow piping system [29]. For a parallel flow case, the head loss is the same in each pipe and the total flow is the sum of the individual flows. The head loss can be written for each pipe in terms of the Darcy friction factor. Assuming the friction factor is the same for each pipe leads to simplification in the determination of the split equality. By substituting the velocity from the head loss equation into the total flow equation yields the following result for the split equality.

$$\Delta S.E. = \left(\frac{1}{\Delta F.L. + 1}\right)^{1/2} - 1 \qquad 7.2$$

Using equation 7.2 results in the curve shown in Figure 7.13 for comparison. The slope of the curve is steeper than the average data curve shown on Figure 7.13. This could be due to lack of sufficient experimental data and from the error introduced by assuming equal friction factors for each pipe. Another limiting assumption to this approach is that it is based on an air

Table 7.4

UT PVC 1:3 Splitter Test Summary

Test No.	Test Duration (Min.)	Limestone Mass Flow Rate (lb/hr)	Feedline Exits					
			Blue		Yellow		Red	
			Line Diff. from Mean %	Mass Split Equal. %	Line Diff. from Mean %	Mass Split Equal %	Line Diff. from Mean %	Mass Split Equal %
20	20	2004	0	-2.1	0	4.9	0	-2.8
21	20	1952	0	-3.6	0	5.2	0	-1.5
22	20	1976	-12.7	-2.3	-12.7	8.0	25.4	-5.7
23	20	1962	-12.7	-3.4	-12.7	9.9	25.4	-6.4
24	20	1940	-12.7	3.5	25.4	-2.6	-12.7	-0.9
25	20	1917	25.4	-14.1	-12.7	4.7	-12.7	9.4
26	25	1414	0	-0.2	0	-1.7	0	1.9
27	20	1905	-6.8	-2.2	-6.8	6.3	13.5	-4.1
28	20	1967	-6.8	-2.3	-6.8	3.0	13.5	-0.7
29	20	1949	3.9	-4.8	3.9	2.3	-7.8	2.5
30	20	1989	3.9	-5.0	3.9	-0.5	-7.8	5.5
31	15	2514	0	-2.9	0	3.1	0	-0.2

only flow, a departure from the actual two phase air/solids mixture. However, Equation 7.2 is simple in form and can be used for design purposes to estimate the split equality with reasonable confidence.

Two tests were conducted at different solid mass flow rates to determine if the split equality was sensitive to this parameter. An air flow rate of 135 cfm was used in both tests. Solid mass flow rates of approximately 1400 lb/hr and 2500 lb/hr were tested, corresponding to solids to air mass ratios of 2.2 and 3.9, respectively. For these two tests, equal feedline lengths were used and the split equality ranged from +3.1 to -2.9 percent. It can be concluded from these tests that a moderate change in solid to air mass ratios have no adverse effect on splitter performance.

A single test was conducted with one of three exit feedlines plugged. The feedline was plugged by inserting an end plug into a 45 degree wye downstream of the splitter. An air flow rate of 135 cfm and a solids mass flow rate of 1960 lb/hr were used, corresponding to a solids to air mass ratio of 3.0. A split equality was computed within $\pm$ 0.2 percent. This was the single best split equality achieved during the testing program indicating that a large increase in transport velocity had a favorable effect on split equality. The splitter exit transport velocity was increased from 84.2 ft/sec to 124.3 ft/sec (50 percent), since one of the three exit feedlines was plugged. The transport velocity through the splitter body would also increase since more solid particles would pack around the plugged exit feedline, thus reducing the total flow area. However, the increase in transport velocity would accelerate the wear effects, and is therefore not recommended.

Also of interest are the magnitudes of pressure drops in the UT 1:3 PVC splitter feed system. The piping system and location of pressure taps were described in the Experimental System section. The pressure drops of the vertical inlet pipe, the splitter, and the exit feedlines versus solid mass flow rates are compared in Figure 7.14. The operating air flow rate was 135 cfm and equal feedline lengths were used for the comparison. There were negligible differences in the three exit feedline pressure drops, so no distinction was made in Figure 7.14. It is important to note that the splitter pressure drop was significantly lower than the three exit feedline pressure drops. It would be desirable for the splitter pressure drop to be significantly greater than the three exit feedline pressure drops. That way, any differences in the three exit feedline lengths would be negated by the large splitter pressure drop, resulting in good split equality. In the TVA Pilot Plant, feedline inserts just downstream of the splitters were originally used to produce large pressure drops. However, the inserts were worn quite extensively and pluggage problems centered in the feedline inserts were experienced. For these reasons, the inserts were removed. Since the splitter pressure drop is significantly lower than the exit feedline pressure drops, equal length feedlines should be used to the maximum extent possible to obtain the best split equality possible for the feed system.

Conclusions

The UT 1:3 PVC splitter design has shown great potential as a replacement of the existing feedline splitters used at the TVA Pilot Plant. During the splitter testing program, there were no occurrences of either pluggage or saltation. The wear resistance capability of the UT 1:3 PVC splitter shows

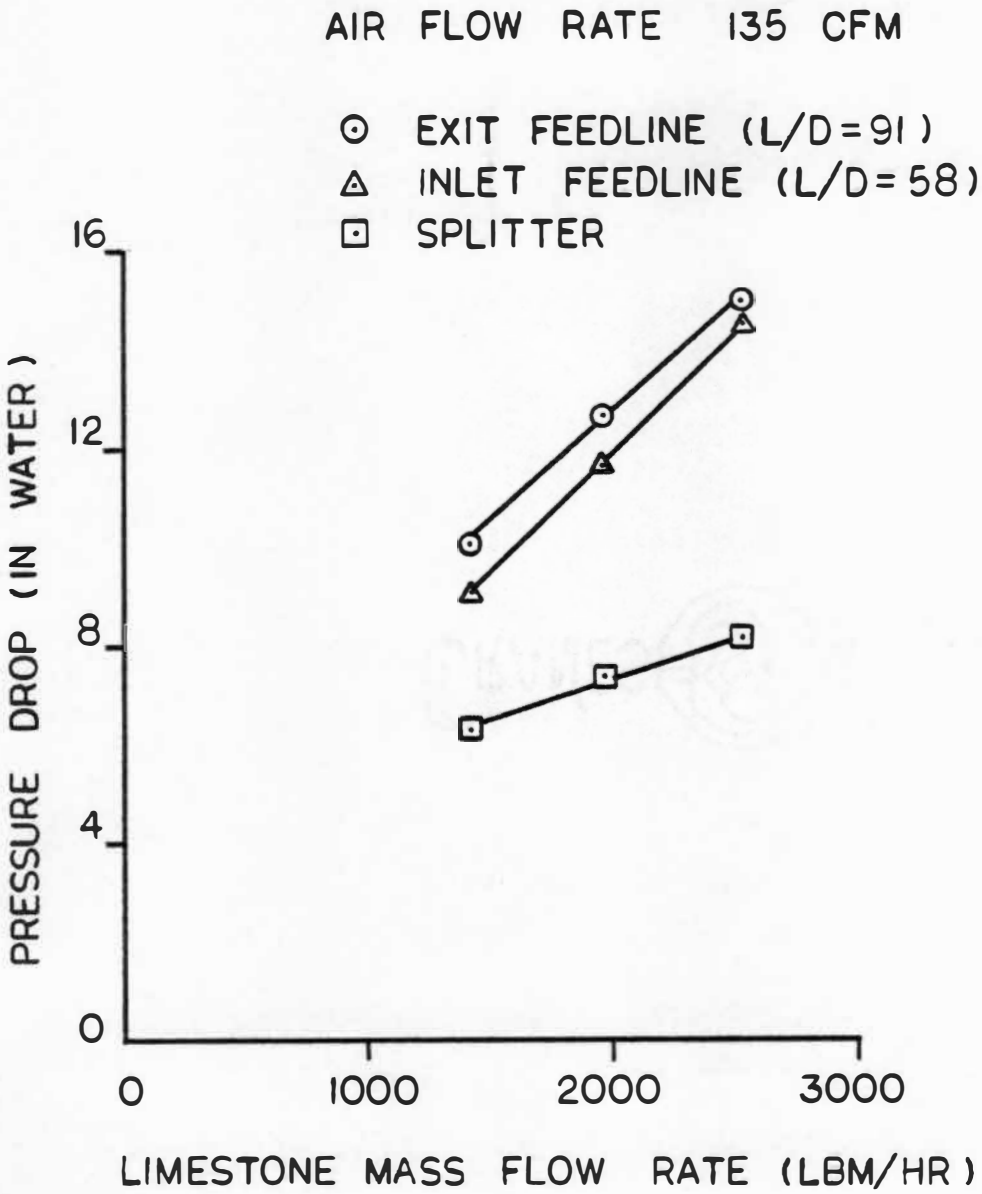

FIGURE 7.14

UT 1:3 PVC SPLITTER OPERATING PRESSURE DROP COMPARISONS

significant promise. After a total of 10 hours of testing and nearly 10 tons of transported material, no detectable PVC material wear has occurred. The wear present has been limited to paint wear only. In comparison to other wear characteristic testing, this was a vast improvement. With equal exit feedline lengths, a split equality of $\pm$ 5 percent can be expected. This lies well within the acceptable range of $\pm$ 10 percent, quoted by TVA. The split equality has been shown to be a function of exit feedline lengths. Consequently, to insure the best split equality obtainable, the feed system should be designed with equal length exit feedlines to the maximum extent possible. The split equality was shown to be independent of solid to air mass ratios, at least within a range of 2 to 4 that was tested.

Overall, the UT 1:3 PVC splitter has shown excellent performance. A similarly designed splitter should be considered as a strong candidate to any pneumatically conveyed solids system that utilizes feedline splitters. This is especially true if a high abrasive solids medium is used.

TVA Compartments A-D Feedline Splitter Design

Introduction

Based on the successful testing of the UT 1:3 PVC splitter, TVA requested a study be undertaken to design a similar splitter for the compartments A-D feed systems at the 20 MW Pilot Plant. After installation of the new splitter design in the Pilot Plant, the performance of the splitter could be monitored and compared to the performance characteristics of the splitters currently used. In this way, the feasibility of using the new splitter design for future AFBC facilities could be accurately determined. The piping system recommendations were made for the compartment D feed system, as it was

the most likely candidate for installation of the new designed splitter and piping system.

Base Design

As with the UT 1:3 PVC splitter the two basic design features for the compartments A-D splitter design are the internal recessed cone and the vertical directed exit feedlines. The recessed cone greatly improves the wear resistance of the splitter and the vertical directed exits reduce wear and greatly simplify the downstream piping system. With these two features as the basis of the design, the determining factors for the 1:3 splitter design were the splitter's inlet and exit feedline sizes. The current 3 inch schedule 80 feedline size upstream of the splitter in compartments A-D was taken as the fixed inlet size. The feedline size downstream of the splitter is currently 2 inch schedule 80. The outside diameter of the 2 inch pipe will be taken as the fixed exit size. A determination of the wall thickness for the exit feedlines will be made based on experimental results from the turning section wear characteristic testing. A change of wall thickness of the exit feedlines has no effect on the design of the 1:3 splitter since the outside diameter of the pipe is independent of wall thickness. The controlling factors in determining the minimum outside diameter of the recessed cone were the exit feedline and corresponding flange sizes. The prevention of exit feedline flange interference sets the minimum outside diameter of the recessed cone. Using standard 2 inch 150 pound flanges resulted in an outside diameter of nearly 13 inches for the recessed cone.

Once the inlet and exit feedline sizes were set, the most important design parameter was the flow area through the splitter body. The same

procedure for calculation of the flow area described in the UT 1:3 PVC splitter section was used. The main spitter body and recessed cone angles were taken as 40 degrees, the same cone angles used in the UT 1:3 PVC splitter design. Several combinations of recess height, recess diameter, and gap were studied. The flow area and corresponding transport velocity through the splitter body were calculated for each combination of design parameters. The transport velocity was calculated based on an operating air flow rate of 300 cfm. Of primary importance is the saltation velocity of the solids feed. Based on an independent study [30], the saltation velocity of a mixture of 1/4 inch X 0 inch top size coal and 1/8 inch X 0 inch limestone is approximately 55 ft/sec. The criteria used to determine acceptable flow areas and corresponding transport velocities in the design was based on a comparison of these parameters to the UT 1:3 PVC splitter design. No saltation occurred during the operation of the UT 1:3 PVC splitter. The saltation velocity for the limestone was computed to be 40 ft/sec (reference Chapter 4). Thus, the coal/limestone mixture saltation velocity is 38 percent greater than the limestone used at UT. Therefore, if the transport velocity is maintained 38 percent above the transport velocity for the UT model, saltation should not occur. Based on this criteria, a gap of 0.76 inches (over three times the maximum particle size), a recess height of 1.69 inches, and a recess diameter of 3.58 inches was chosen to produce satisfactory flow areas.

An added design feature to the compartments A-D splitter design was the addition of a 1/4 inch shim plate. The base design included the 1/4 inch shim plate to the splitter assembly. The purpose of the shim plate was to add flexibility in changing the flow area by the installation or removal of varying thickness shim plates. In effect, the recessed cone can be translated

vertically in relation to the main splitter body. Consequently, the gap size, and hence the flow area through the splitter body can be altered if needed. The flow areas and corresponding transport velocities are shown in Figures 7.15 and 7.16, respectively. The base design with a 1/4 inch shim plate is shown in comparison to the cases with no shim plate and with a 1/2 inch shim plate. The UT 1:3 PVC splitter transport velocities shown in Figure 7.5, page 72, should be referenced for comparison to the base design shown in Figure 7.16. The lowest transport velocity for the compartments A-D 1:3 splitter design was increased by nearly 56 percent compared to the UT 1:3 PVC splitter. The 56 percent comparative increase in transport velocity should more than offset the 38 percent comparative increase in saltation velocity. Consequently, saltation should not occur. But if saltation should occur with the base design, the existing 1/4 inch shim can easily be replaced with a thicker (1/2 inch) shim plate which would increase the transport velocity by nearly 30 percent. If saltation still occurs, a thicker shim plate should be installed. If on the other hand, saltation does not occur with the base design, the removal of the shim plate should be considered to reduce the transport velocity. A reduction in transport velocity of around 20 percent would result, along with a significant reduction in the splitter wear rate. With no shim, the gap size would be 0.925 inches, allowing larger particles to pass through the splitter body.

The design drawings for the compartments A-D 1:3 splitter are shown in Figures 7.17 through 7.22. The assembly drawing is shown in Figure 7.17. The splitter is basically composed of four main parts: the main splitter body, the internal recessed cone, the top plate, and the shim plate. These parts are detailed in Figures 7.18 through 7.21, respectively. The exit feedlines and flanges which are welded to the top plate are detailed in Figure 7.22. One

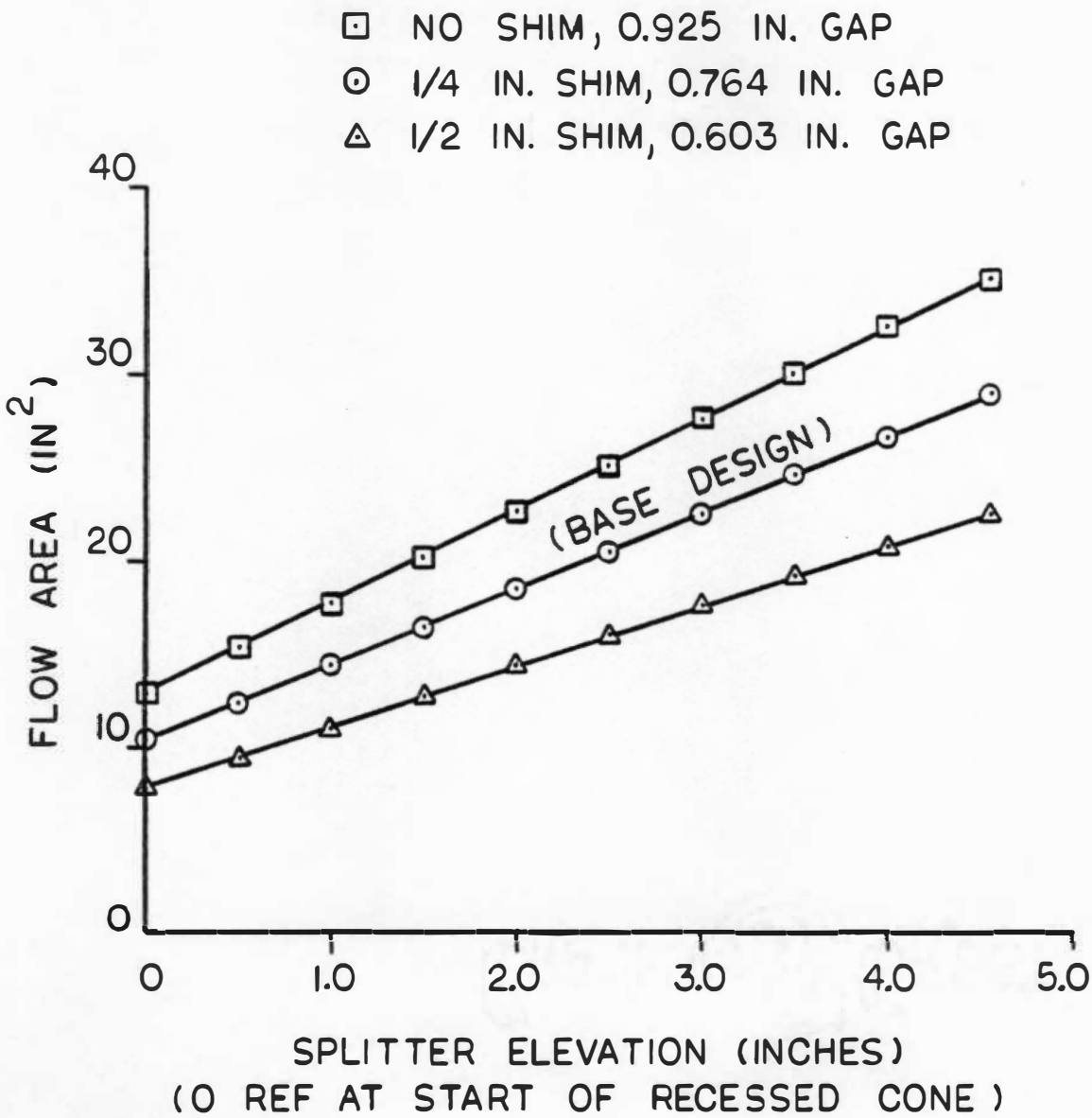

FIGURE 7.15

TVA 1:3 A-D SPLITTER FLOW AREA

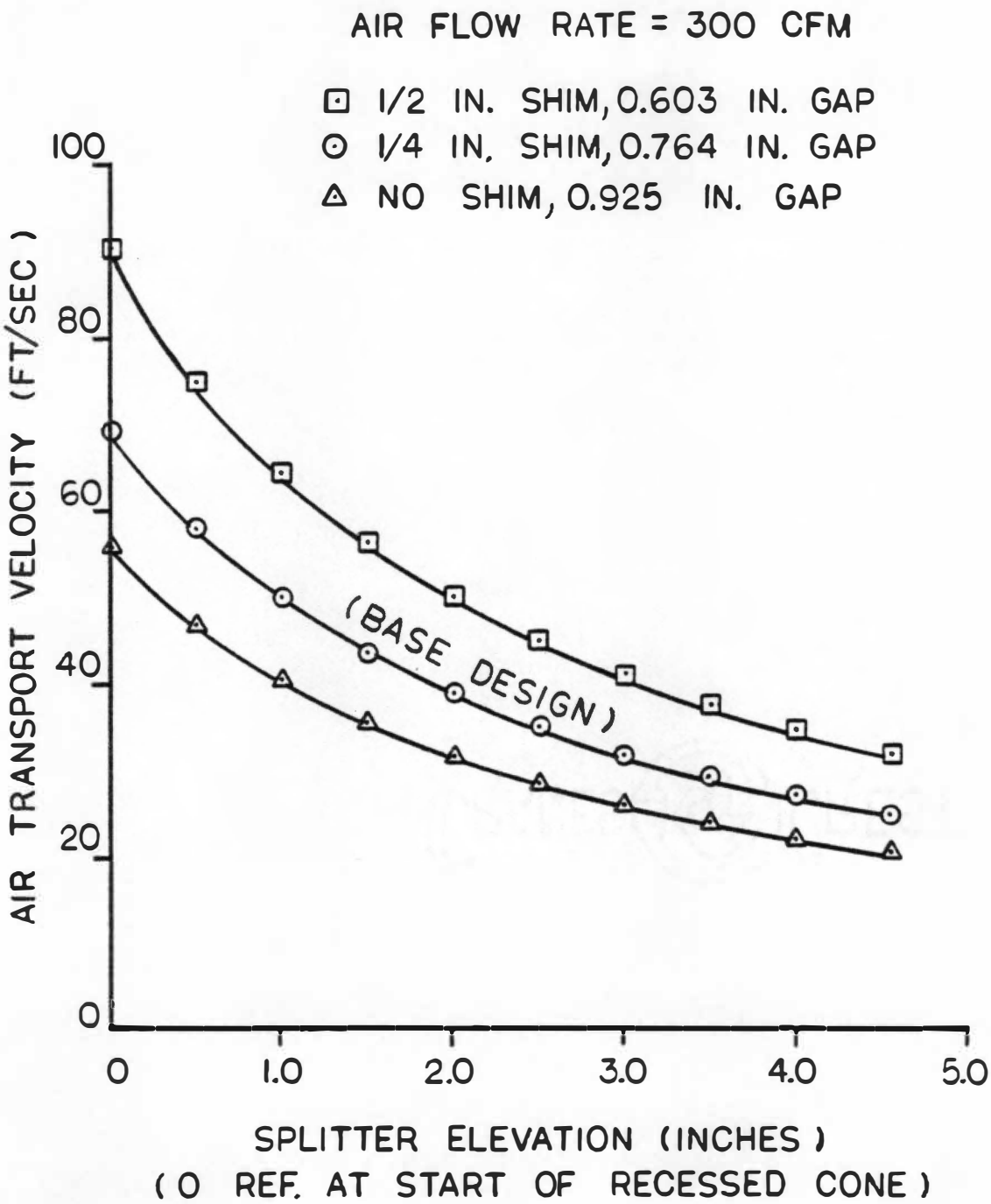

FIGURE 7.16

TVA 1:3 A-D SPLITTER TRANSPORT VELOCITY

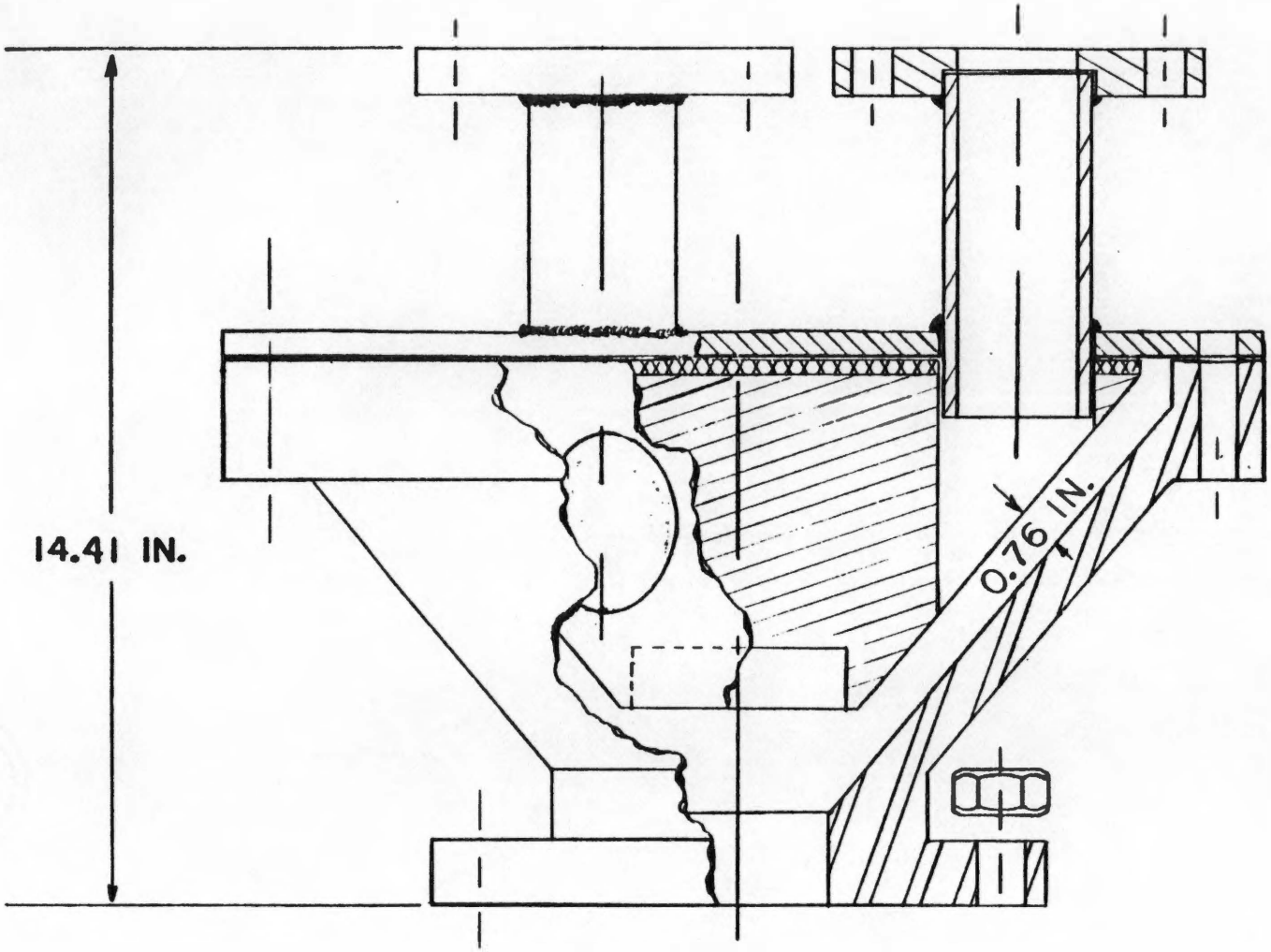

FIGURE 7.17

TVA 1:3 A-D ASSEMBLED SPLITTER

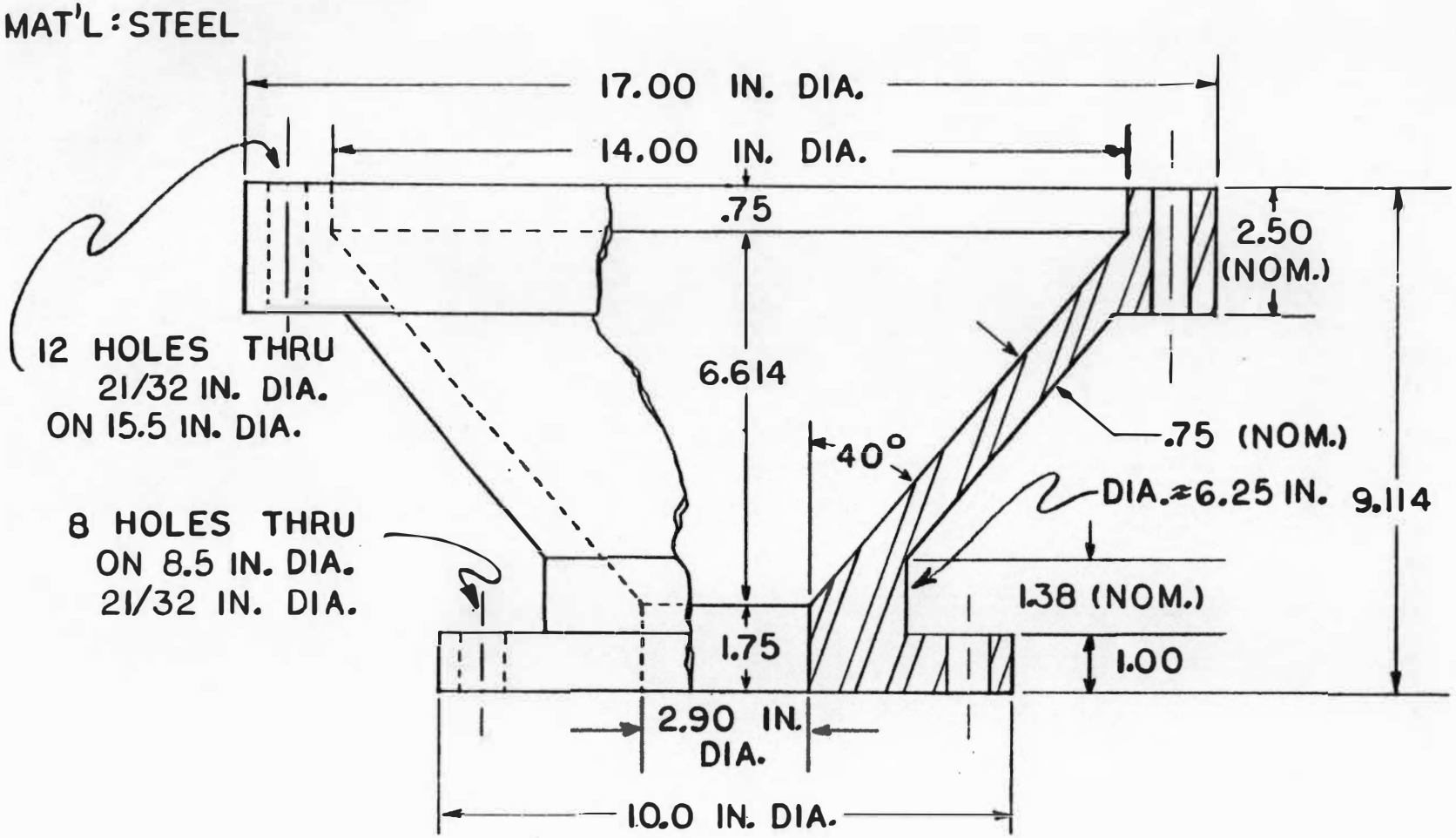

FIGURE 7.18
TVA 1:3 A-D MAIN SPLITTER BODY

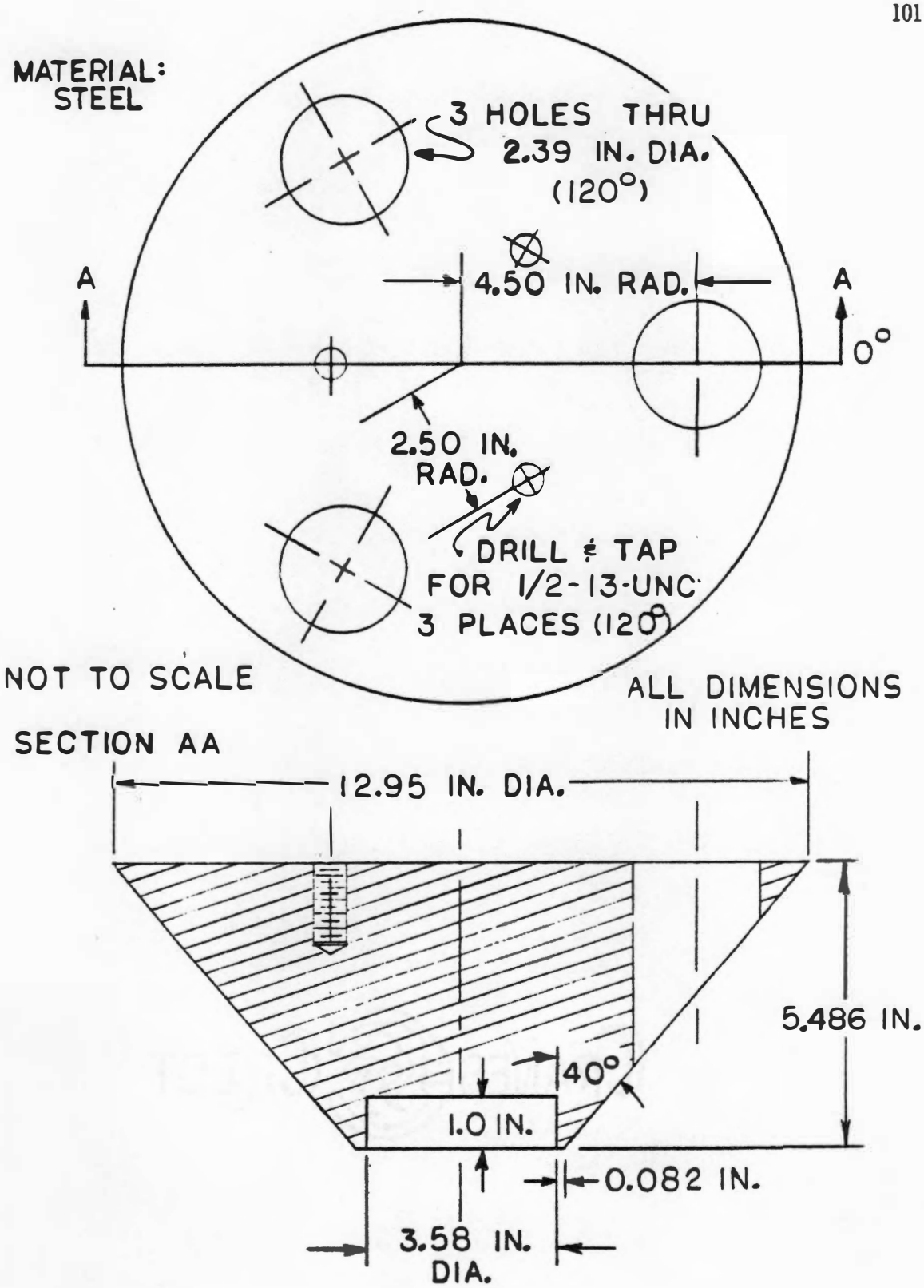

FIGURE 7.19

TVA 1:3 A-D RECESSED SPLITTER CONE

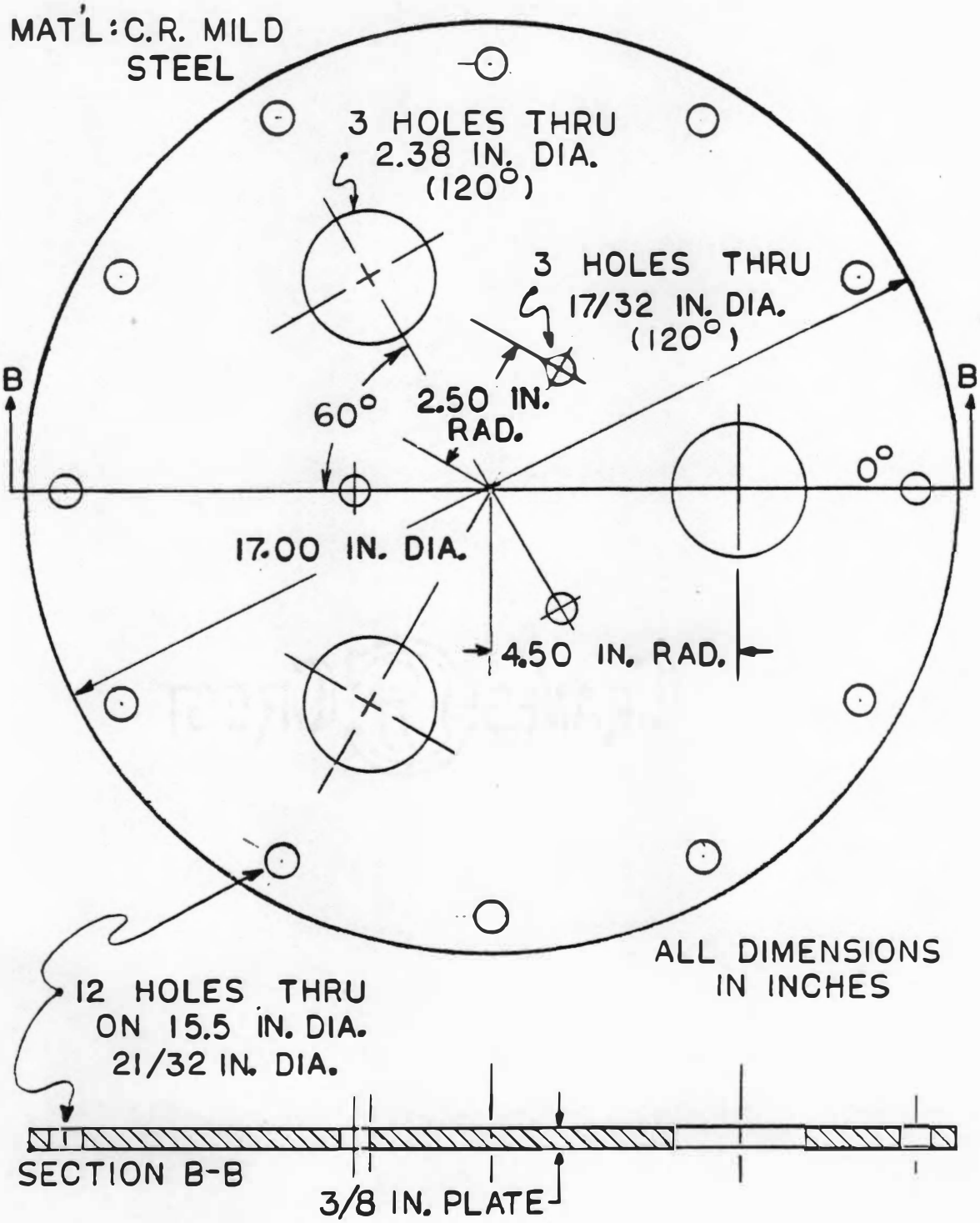

FIGURE 7.20

TVA 1:3 A-D SPLITTER TOP

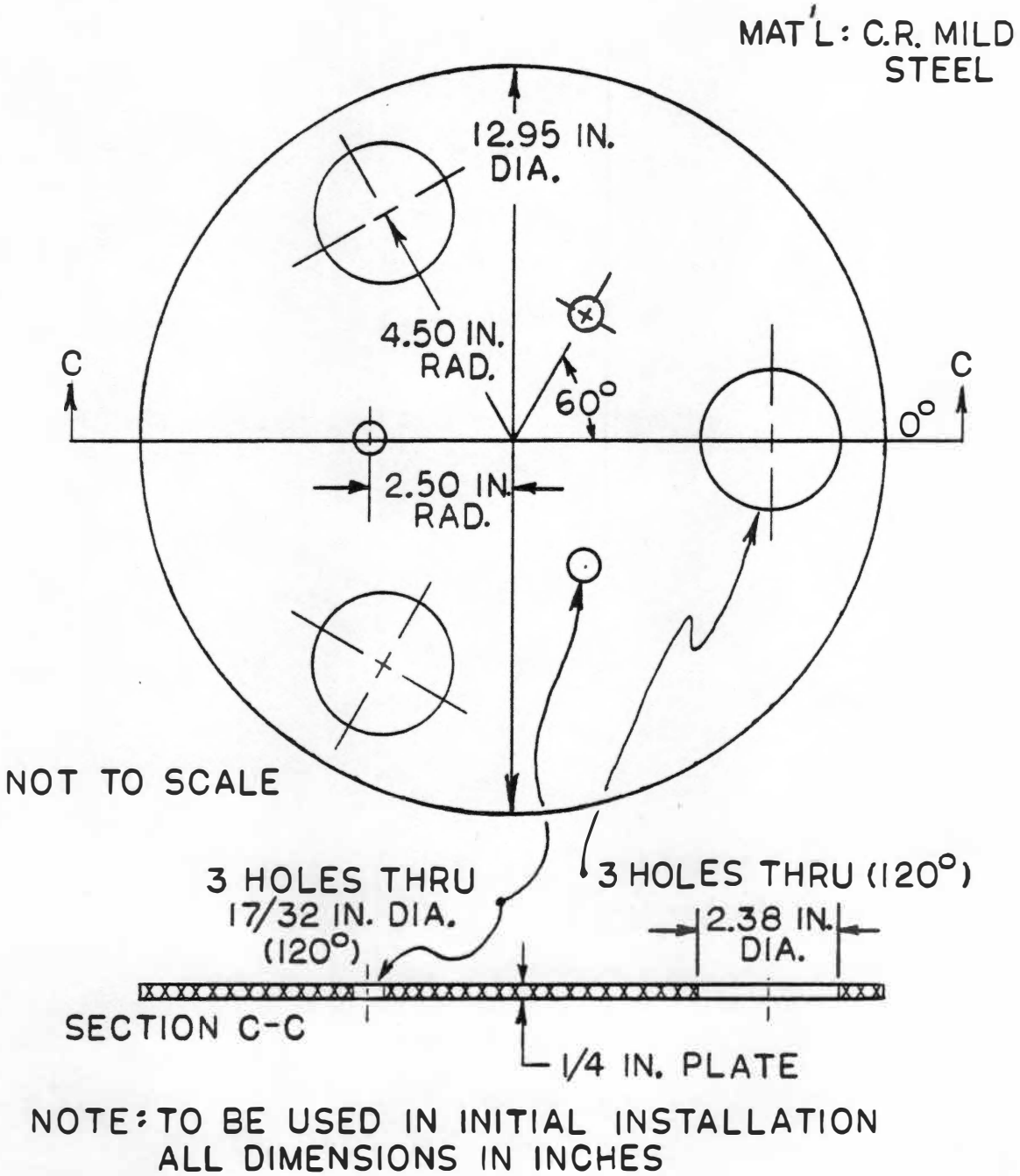

FIGURE 7.21

TVA 1:3 A-D SHIM PLATE

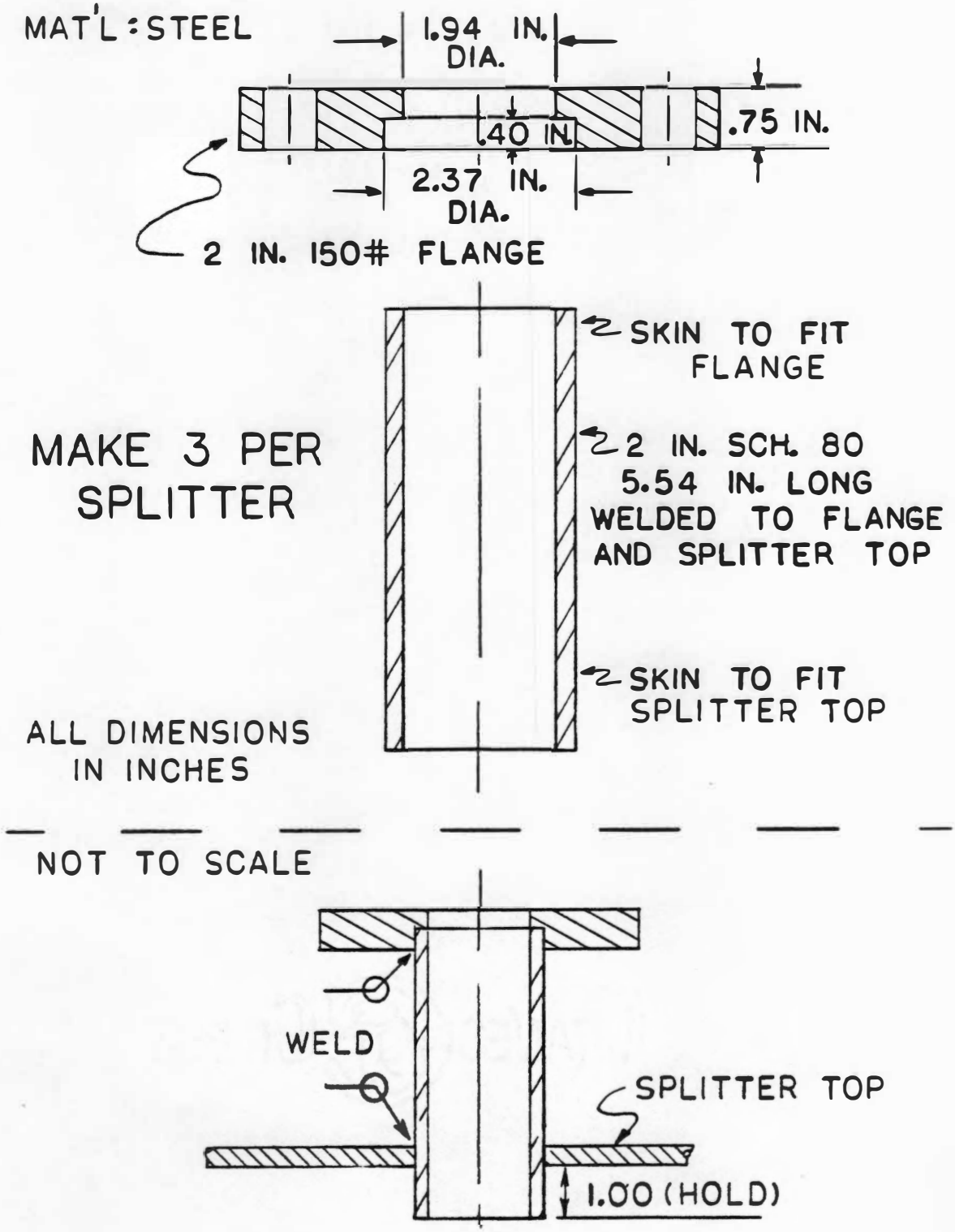

FIGURE 7.22

TVA 1:3 A-D SPLITTER EXITS

significant change from the UT 1:3 PVC splitter design was the reduction of the large void area located at the splitter top. The results of the UT 1:3 PVC splitter testing showed that the void area was unnecessarily large. A reduction in the void area reduces the possibility of pluggage with no reduction in the wear resistance. The spread angle for the base design was also increased from 10.6 to 11.4 degrees. The increase was not due to any results from the UT 1:3 PVC splitter testing, but for the following reason. If the 1/4 inch shim plate is removed from the base design, the recess height would be increased by 1/4 inch, thus reducing the spread angle. To insure a 10 degree spread angle for this case, the spread angle was increased to 11.4 degrees in the base design.

The design of the compartments A-D 1:3 splitter use 2 inch schedule 80 exit feedlines. Based on limited PVC long radius bend wear rate data presented in Figure 5.3, page 25, this feedline wall thickness size would provide the longest life for 2 inch exit lines. Three feedline sizes were compared: 2 inch schedule 40, 80, and 160. The 2 inch schedule 80 feedline size was used as the base size for percentage comparisons. Table 7.5 shows the area, wall thickness, velocity based on an air flow rate of 100 cfm, and the wear rate from Figure 5.3, page 25, for each feedline size. A percentage comparison of velocity, wear rate, and wall thickness is shown in Table 7.6. From Table 7.6, a change to a 2 inch schedule 40 feedline size would reduce the wall thickness by 29.4 percent, but only decrease the wear rate by 26 percent. From this comparison, the 2 inch schedule 40 feedline size would wear to failure in a quicker time than the 2 inch schedule 80 feedline size. The 2 inch schedule 160 feedline size would increase the wall thickness by 57.8 percent, but the resulting increase in transport velocity would increase the

Table 7.5

Feedline Size Wear Comparisons

Feedline Schedule (all 2 inch diameter)	Flow Area (in.)	Wall Thickness (in.)	Transport Velocity @ 100 cfm (ft/sec)	PVC Turning Section Wear Test Results (Ref. Fig. 5.3) Wear Rate (in/hr. x 100)
40	3.355	0.154	71.53	3.311
80	2.953	0.218	81.27	4.469
160	2.235	0.344	107.38	8.717

Table 7.6

Feedline Size Wear Percentage Comparisons[1]

Feedline Schedule	Velocity (%)	Wear Rate (%)	Wall Thickness (%)
40	-12.0	-26.0	-29.4
80	----	----	----
160	+32.1	+95.0	+57.8

[1]Based on 2 inch diameter schedule 80 size

wear rate by around 95 percent. Although the wall thickness has been increased, the 2 inch schedule 160 feedline would actually wear to failure in a quicker time period than a 2 inch schedule 80 feedline size. Based on the limited wear rate results from PVC turning section wear testing, the 2 inch schedule 80 feedline size is recommended. If more than one bed A-D feedline splitter is used at some point in time, it is recommended that a different schedule thickness pipe be installed (preferably 2 inch schedule 80 and/or 160) to determine which size would provide longer life.

Recommendations

One of the main design features included in the compartments A-D design were the vertical directed exit feedlines. This design feature resulted in a simpler downstream piping system and increased the wear resistance of the feed system. The basis concept of the effort was to design feed piping systems that consist of straight piping sections and controlled turning sections where the solids would wear upon themselves. This design philosophy would produce planar pipe paths and would elimate the numerous bends currently used at the pilot plant downstream of the feed splitter assemblies. The feed piping system recommendations that follow are presented for the compartment D feed system only since it was the most likely candidate for installation of the new splitter design and corresponding feed piping system. However, the feed piping recommendations can be directly extended to the other compartments as well.

In order to obtain the simplest pipe paths, the plan view location of the compartment D splitter assembly should be moved from the current in-line orientation with the feed ports (geometric center of the bed area) to an off-

line orientation. Figure 7.23 shows the recommended piping arrangement. In the proposed feed system, 45 degree wye turning sections have replaced the numerous ceramic lined bends in the existing system. Each feedline downstream of the splitter assembly would require two 45 degree wyes. The first 45 degree wye is oriented to direct the flow through a 45 degree traverse straight pipe to immediately below the feed port. The second 45 degree wye redirects the flow vertically through another straight pipe to the feed nozzle.

The proposed location and orientation of the splitter shown in Figure 7.23 results in near equal exit feedline lengths. The total length of each feedline was calculated and the percent feedline length difference from the mean length was computed in the manner described in the UT 1:3 PVC splitter section. The percent feedline length differences for the proposed compartment D feed piping system are summarized in Figure 7.23. From the split equality results for the UT 1:3 PVC splitter testing presented in Figure 7.13, page 87, the split equality for the proposed compartment D 1:3 splitter and feed piping system is expected to be within $\pm$ 7 percent. This split equality range is within the acceptable $\pm$ 10 percent range currently used by TVA.

The proposed compartment D feedline system for a single feedline is shown in Figure 7.24. Flanged connections, both upstream and downstream of the 45 degree wyes are recommended for ease of alignment or removal. Short threaded pipe sections (or welded connections) are recommended for the connection of the 45 degree wyes to the flanges. The threaded pipe sections would allow turning of the 45 degree wyes to assure proper orientation and also simplify the flange bolt alignments. The threaded pipe section downstream of the 45 degree wyes need to be of minimum length required to provide clearance for removal of the end plug of the 45 degree wyes. The 45

FROM SPLITTER TOP ELEVATION 16' 6"
TO ℄ ELEVATION OF DISTRIBUTOR PLATE (35' 0")

RECOMMENDED PLACEMENT

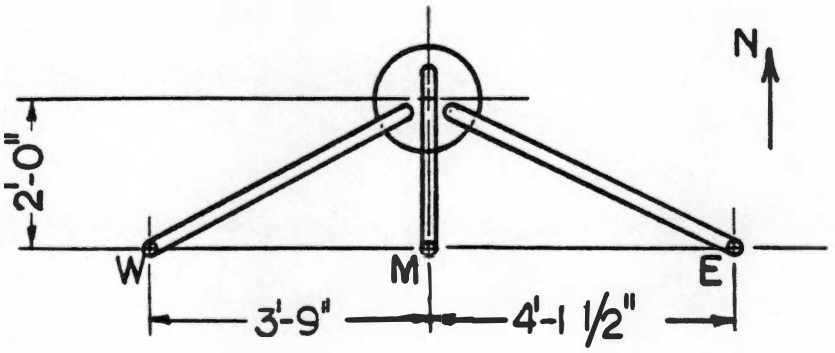

Location	Length (ft.)	% Difference from Mean	Max. Diff.
E	20.24'	1.5	
M	19.48'	-2.3	3.8%
W	20.11'	.8	
Total:	59.83'		
Mean:	19.94'		

FIGURE 7.23

TVA 1:3 PIPING PATH LENGTHS—COMPARTMENT D

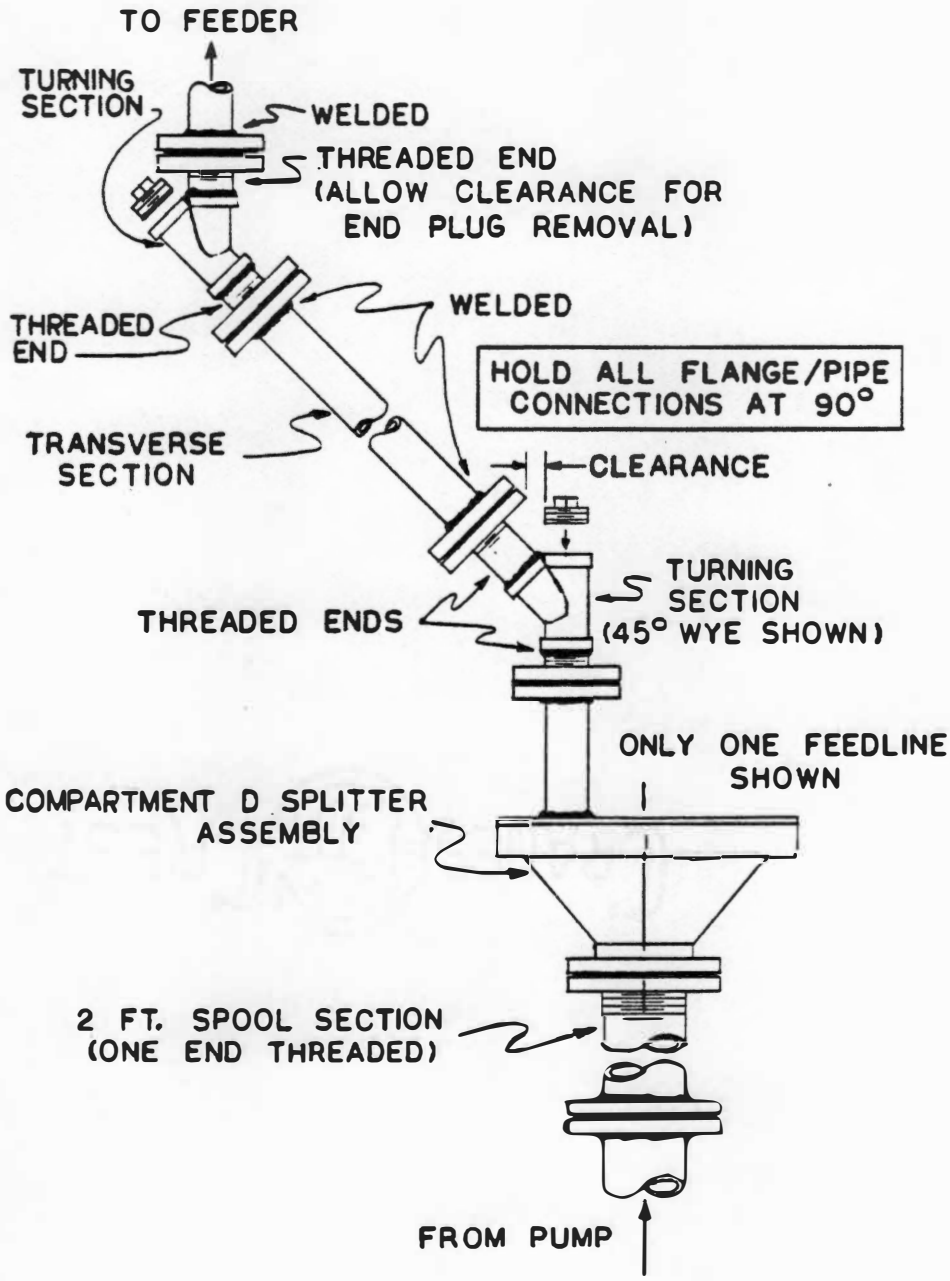

FIGURE 7.24

PLANAR FEED SYSTEM—TVA COMPARTMENT D

degree wyes end plugs can be removed to clear any pluggages in either the 45 degree wyes or the straight piping sections. All other pipe to flange connections are welded, and extreme care must be maintained to prevent any misalignment. Any misalignment in any joint (welded or threaded), will produce very high localized wear areas that are preventable by insuring proper alignment.

Flanged connections both upstream and downstream of the splitter are recommended. The upstream end includes a two foot flanged spool section with one end threaded (or welded in place). Once again, the flanges allow for ease of installation or removal. The threaded end spool section would provide flexibility in the splitter orientation and ease of flange both alignments.

Conclusions

The new compartments A-D 1:3 splitter design and recommended feed piping system improves the existing feed system currently used at TVA in several ways. First, and most importantly, the new 1:3 splitter design will greatly improve the wear resistance of the splitters currently used in the TVA Pilot Plant. The new 1:3 splitter can be expected to operate for a much longer time period before wear effects the splitter operation. Secondly, the vertical directed splitter exit feedlines have simplified the downstream piping system. The piping system consists of standard 45 degree wye turning sections with straight piping sections. The 45 degree wyes have replaced the numerous ceramic lined bends in the existing system. Each exit feedline will be standardized in the sense that only 45 degree wyes and straight piping sections will be used in each exit feedline, not the varied angled bends currently used. By monitoring the life of the 45 degree wye turning sections, an economic

comparison can be made to the ceramic lined bends currently used in the feed system. Last, the recommended feed piping system will have near equal feedline lengths. Based on the UT 1:3 PVC splitter testing, the split equality can be expected to be within ± 7 percent, certainly acceptable under TVA's ± 10 percent criteria. All of these factors combined should produce a superior feed system.

TVA Recycle Feedline Splitter Design

Introduction

The original recycle system at the TVA 20 MW Pilot Plant utilized a 1:3 feedline splitter. With only three recycle feed ports to feed the bed, nonuniform distribution of the recycle material resulted. With recycle rates up to 60,000 lb/hr, the system requirement, nonuniform distribution becomes a significant factor. For this reason, TVA decided to increase the number of recycle feedlines and concluded that six recycle feedlines would alleviate the problem of non-uniform feed. Consequently, a new 1:6 recycle splitter was required for the new recycle feed system. Based on the successful testing of the UT 1:3 PVC splitter, TVA in January 1984 requested a study be undertaken to design a similar splitter to meet the requirements of the recycle feed system. The 1:6 recycle splitter design presented in this section was then fabricated by TVA for incorporation into the new recycle feed system. Recommendations were also given for the new recycle feed piping system. While not all of the feed piping recommendations were used by TVA, the basic design philosophy for the piping system was followed. The new 1:6 recycle splitter and feed system in the TVA Pilot Plant became operational March 22, 1984.

Base Design

As with the compartments A-D 1:3 splitter design, the 1:6 recycle splitter is of entirely steel construction. The two basic design features of the 1:6 recycle splitter were, once again, the internal recessed cone and the vertical directed exit feedlines. With these two features as the basis of the design, the determining factors of the 1:6 recycle splitter design were the splitter's inlet and exit feedline sizes. The current 5 inch schedule 80 recycle feedline upstream of the recycle splitter was taken as the fixed inlet size. The exit feedline sizes were specified by TVA to be 2 1/2 inch schedule 160. The controlling factors in determination of the splitter outside diameter were exit feedline and corresponding flange sizes. Using standard 2 1/2 inch 150 pound flanges (7 inch outside diameter) in a planar orientation would result in an excessively large (greater than 24 inch) splitter diameter. Therefore, the elevation height of the exit feedline flanges were staggered, resulting in a more compact (19 1/2 inch diameter) splitter. This design still allowed ample room for welding the exits into place during the initial fabrication of the top plate assembly.

Once the inlet and exit feedline sizes were set, the essential design parameter was the flow area through the splitter body. Again, the estimation of the flow area was computed in the same manner as for the UT 1:3 PVC splitter. Once the flow areas were calculated, the transport velocities could be computed. The saltation velocity of the char recycle feed material was not known, but was assumed to be approximately the same as for a coal/limestone mixture, 55 ft/sec. The criteria used to determine acceptable transport velocities was to compare the transport velocites of the 1:6 recycle splitter to the UT 1:3 PVC splitter. For this design, the transport velocities were held

above those for the UT 1:3 PVC splitter. Consequently, the possibility of saltation is unlikely.

Based on data received form TVA, three typical sets of splitter inlet conditions were chosen for the transport velocity calculations. Several combinations of recess height, recess diameter, and gap size were studied to determine satisfactory flow areas and corresponding transport velocities. It was concluded that a gap of 1 inch, a recess height of 2.16 inches, and a recess diameter of 5.66 inches would produce satisfactory flow areas and corresponding transport velocities. The gap was increased to 1 inch because of the increase in the operating air flow rate of the recycle system.

A 1/4 inch shim plate was also used in the base design of the 1:6 recycle splitter to add flexibility in changing the gap size, and hence flow area and corresponding transport velocity. The flow areas for the 1:6 recycle splitter are shown in Figure 7.25. The flow areas for the base design (1/4 inch shim) were compared to the flow areas for the case of a 1/2 inch shim and for the case of no shim. The transport velocities for the base design are shown in Figure 7.26 for three typical sets of splitter inlet conditions. The lowest transport velocity was around 31 ft/sec., nearly double the low transport velocity in the UT 1:3 PVC splitter. Based on this comparison, the occurrence of saltation does not seem likely. If saltation does occur, the 1/4 inch shim should be replaced by a 1/2 inch shim to increase the transport velocity. If saltation does not occur, the removal of the 1/4 inch shim should be considered to reduce the transport velocity, and consequently reduce the wear rate of the splitter. A comparison of the transport velocities is shown in Figure 7.27 for a 1/2 inch shim, 1/4 inch shim, and for no shim. A single inlet condition was used for the comparison. A change to a 1/2 inch shim will increase the

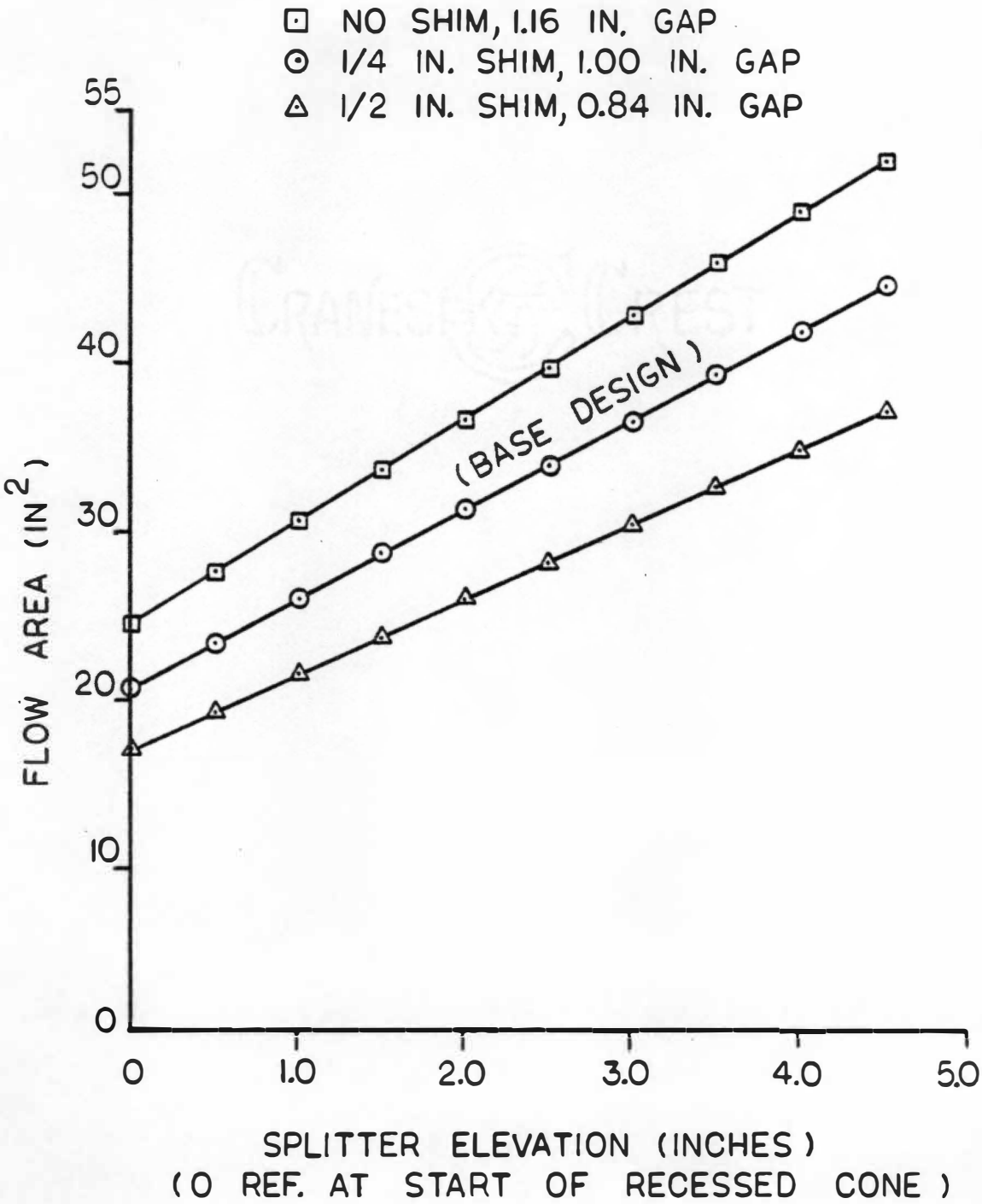

FIGURE 7.25

TVA 1:6 RECYCLE SPLITTER FLOW AREA

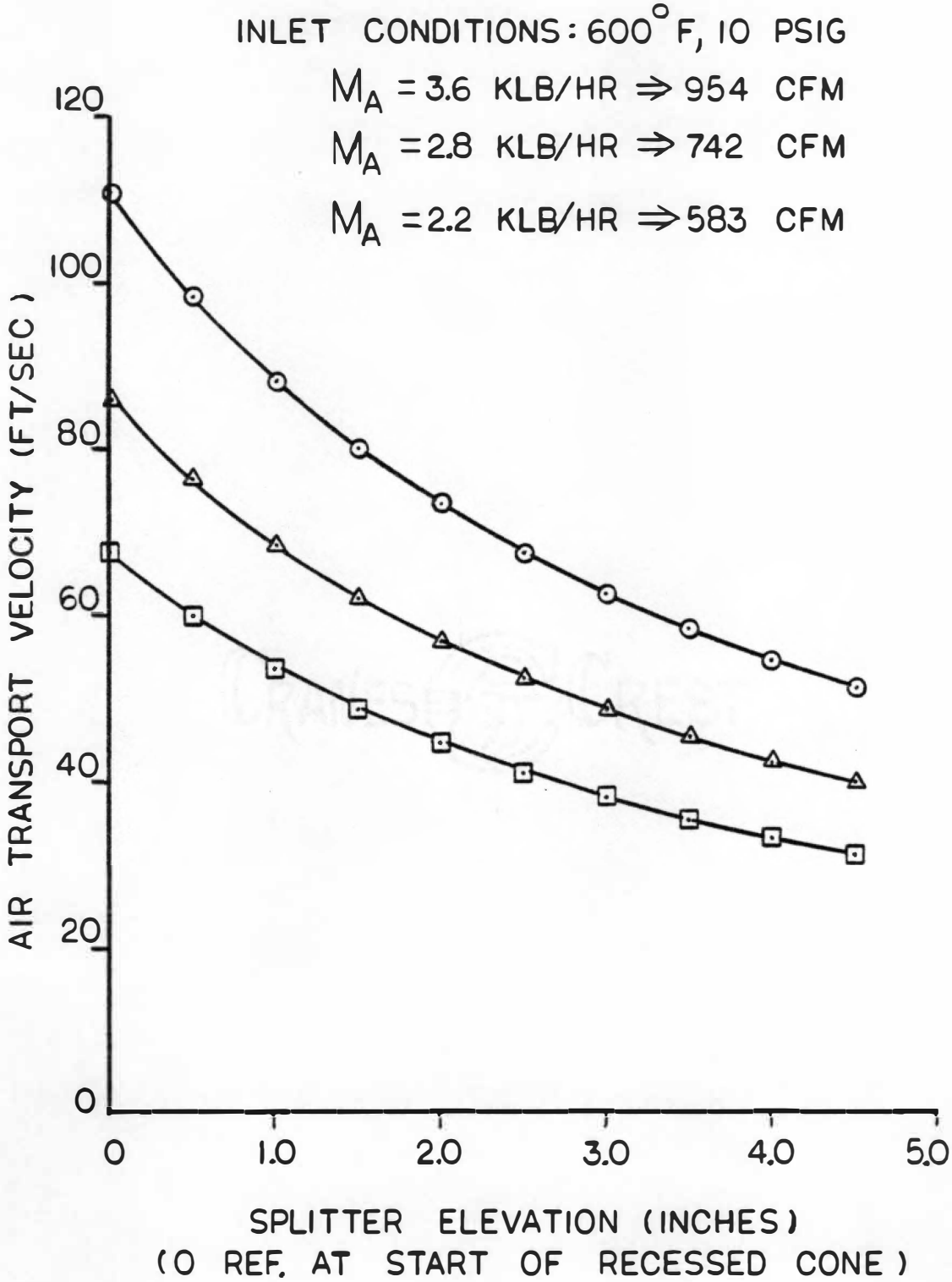

FIGURE 7.26
TVA 1:6 RECYCLE SPLITTER TRANSPORT VELOCITY—
3 INLET CONDITIONS

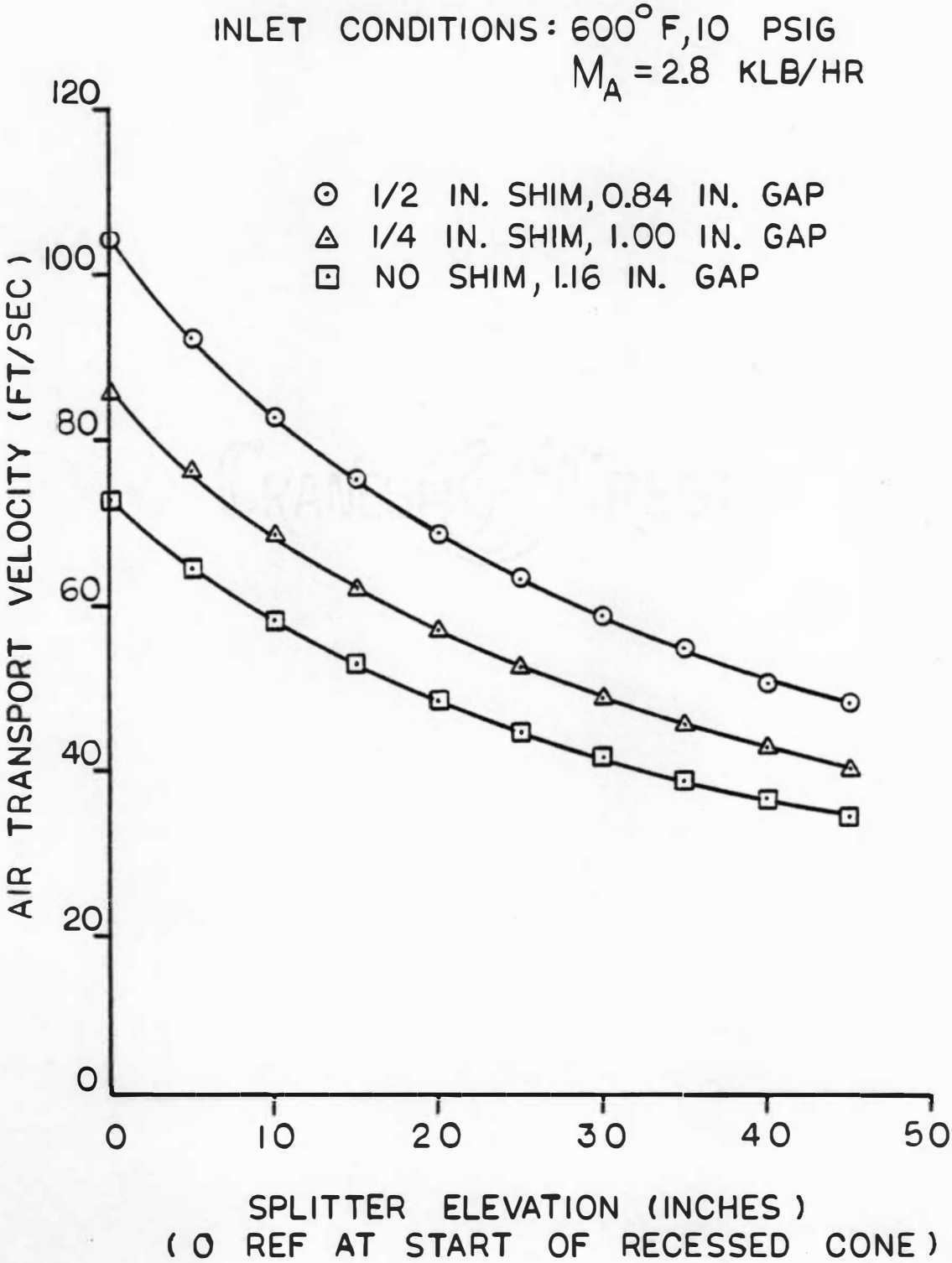

FIGURE 7.27
TVA 1:6 RECYCLE SPLITTER TRANSPORT VELOCITY—
EFFECT OF SHIM PLATES

transport velocity by around 20 percent, while the removal of the 1/4 shim would reduce the transport velocity by around 15 percent.

A change in recycle operating temperature also effects the transport velocity. Assuming the air mass flow rate and air pressure remain constant, a decrease in operating temperature will reduce the air flow rate due to an increase in air density. A recycle temperature of 600 degrees fahrenheit was used to construct Figure 7.26. Figure 7.28 show the transport velocities for the same operating conditions except the recycle air temperature was reduced to 300 degrees fahrenheit. A reduction in transport velocity of around 28 percent resulted. This transport velocity was still 40 percent greater than the low velocity for the UT 1:3 PVC splitter.

The design drawings for the 1:6 recycle splitter are presented in Figures 7.29 through 7.34. The assembled 1:6 recycle splitter is shown in Figure 7.29. The splitter is composed of four main parts; the main body, the recessed internal cone, the splitter top, and the 1/4 inch shim plate. These parts are detailed in Figures 7.30 through 7.33, respectively. The splitter exit feedlines and flange assemblies that are welded to the splitter top are shown in Figure 7.34.

Recycle Feed Nozzles

The choice of 2 1/2 inch schedule 160 feedline splitter exits necessitated the design of an appropriate sized floating valve cap/cage feeder. The development of a new cage was discussed in Chapter 6. The principle design features of the cage were as follows: a center-line to center-line post diameter of 4.00 inches, a cap travel of 3/4 inch, a knife edge used for the post rests to prevent cap fusion, a 5/8 inch diameter post to provide added

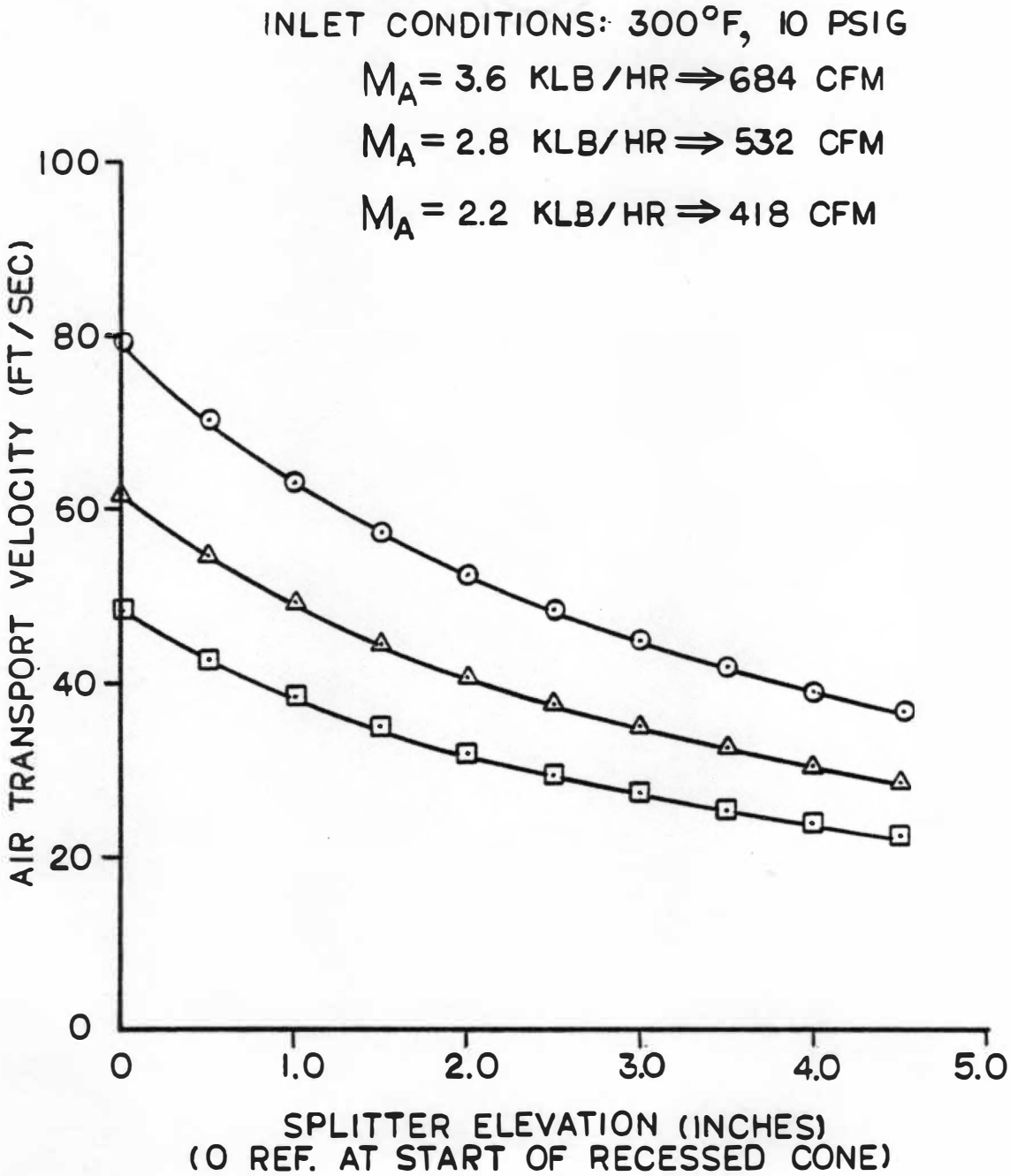

FIGURE 7.28
TVA 1:6 RECYCLE SPLITTER TRANSPORT VELOCITY—EFFECT OF RECYCLE TEMPERATURE

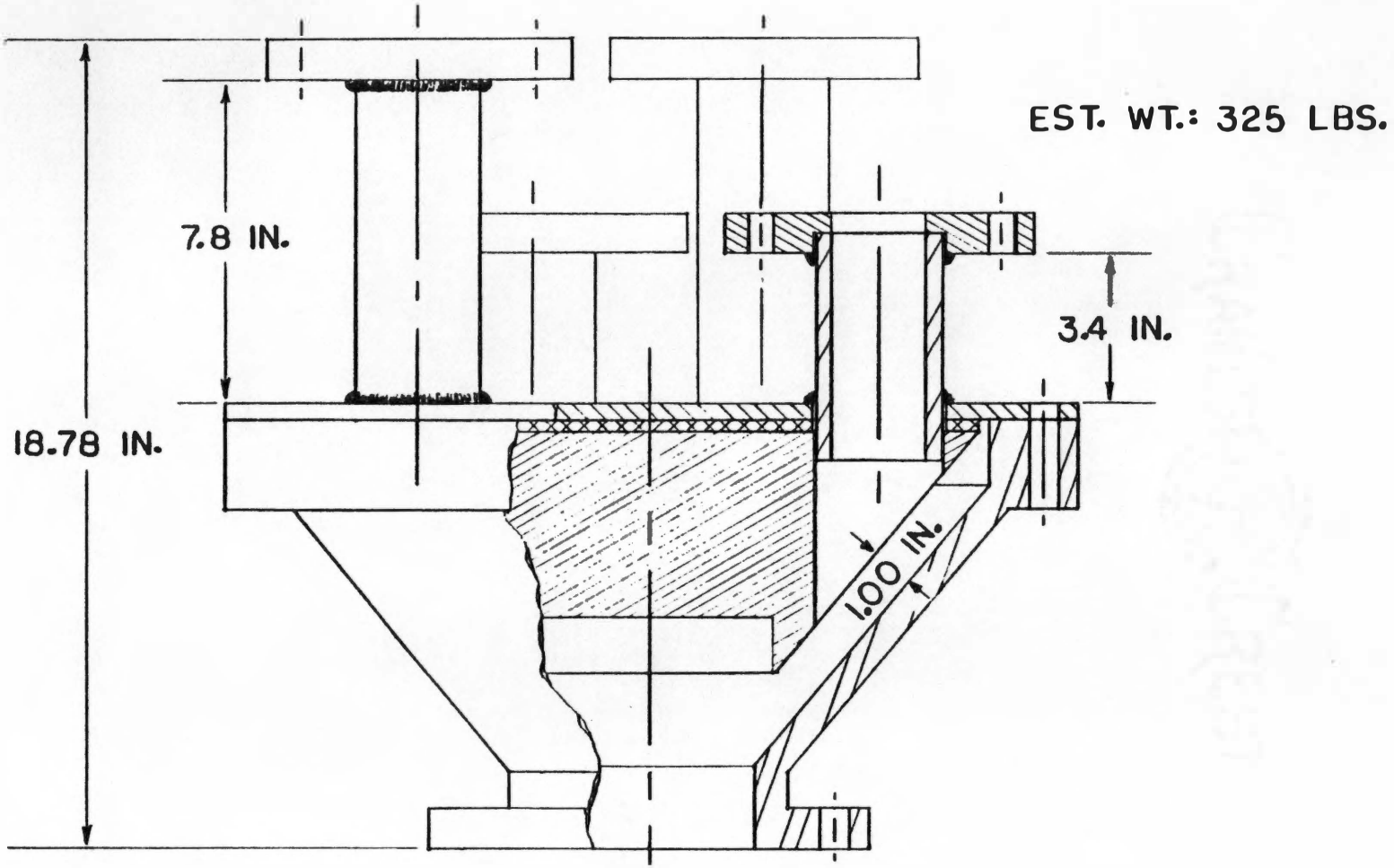

FIGURE 7.29
TVA 1:6 RECYCLE ASSEMBLED SPLITTER

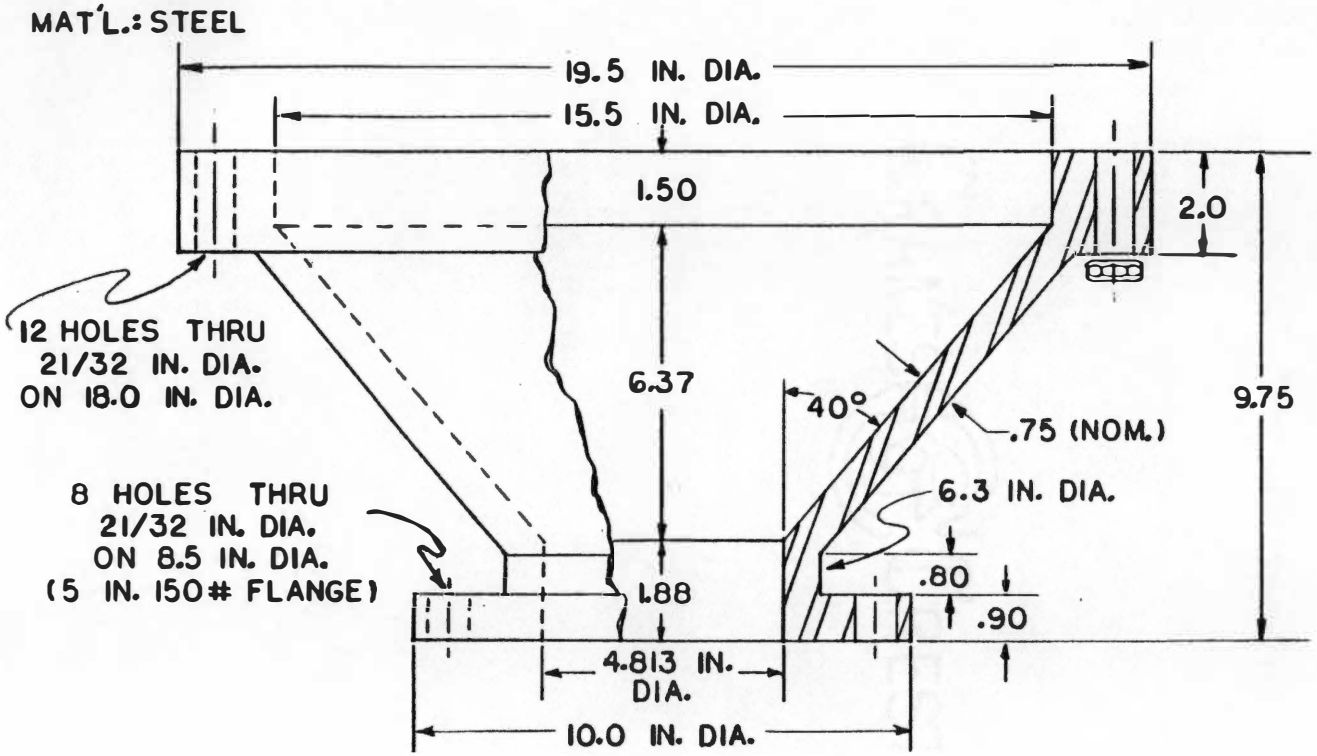

FIGURE 7.30

TVA 1:6 RECYCLE MAIN SPLITTER BODY

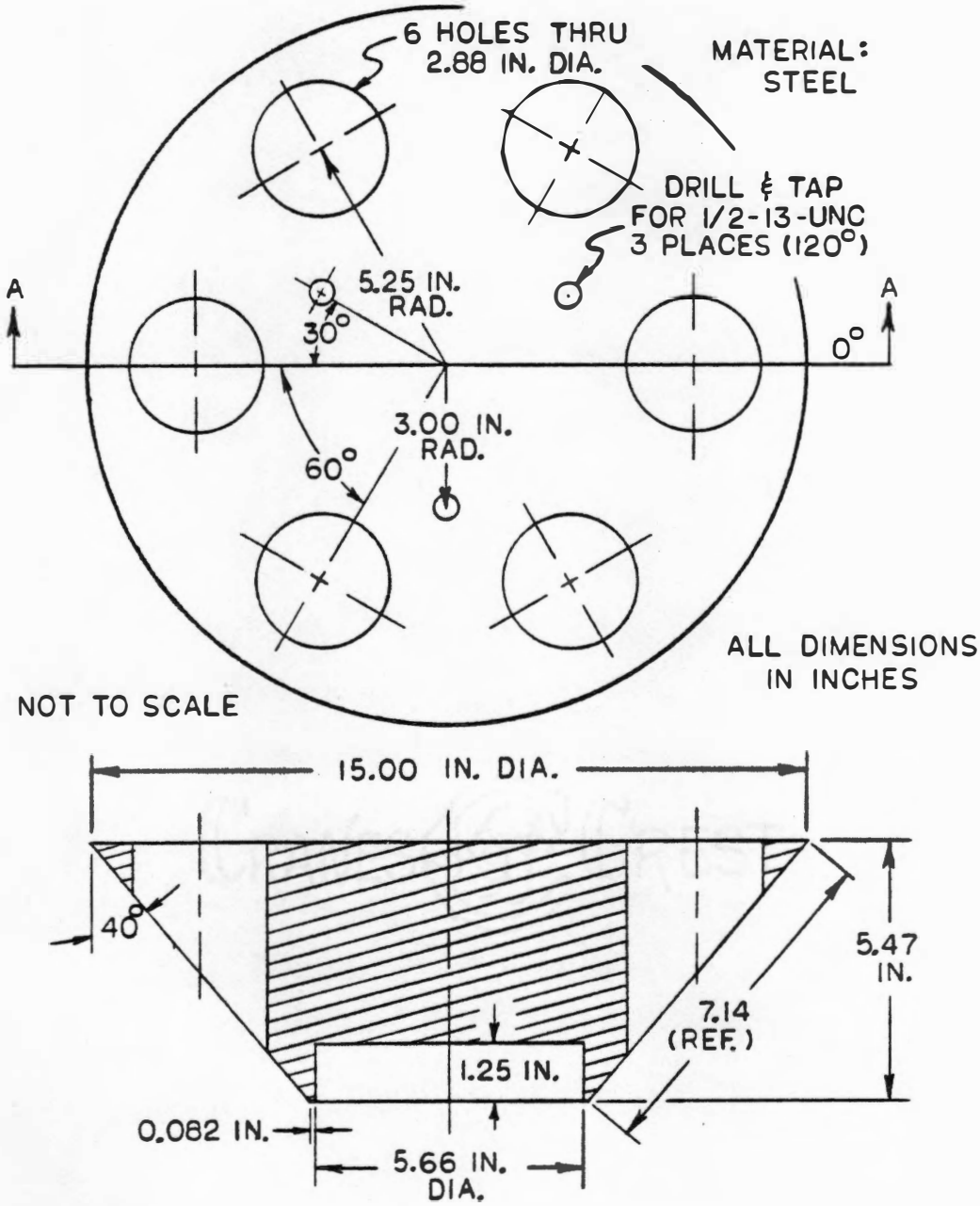

FIGURE 7.31

TVA 1:6 RECYCLE RECESSED SPLITTER CONE

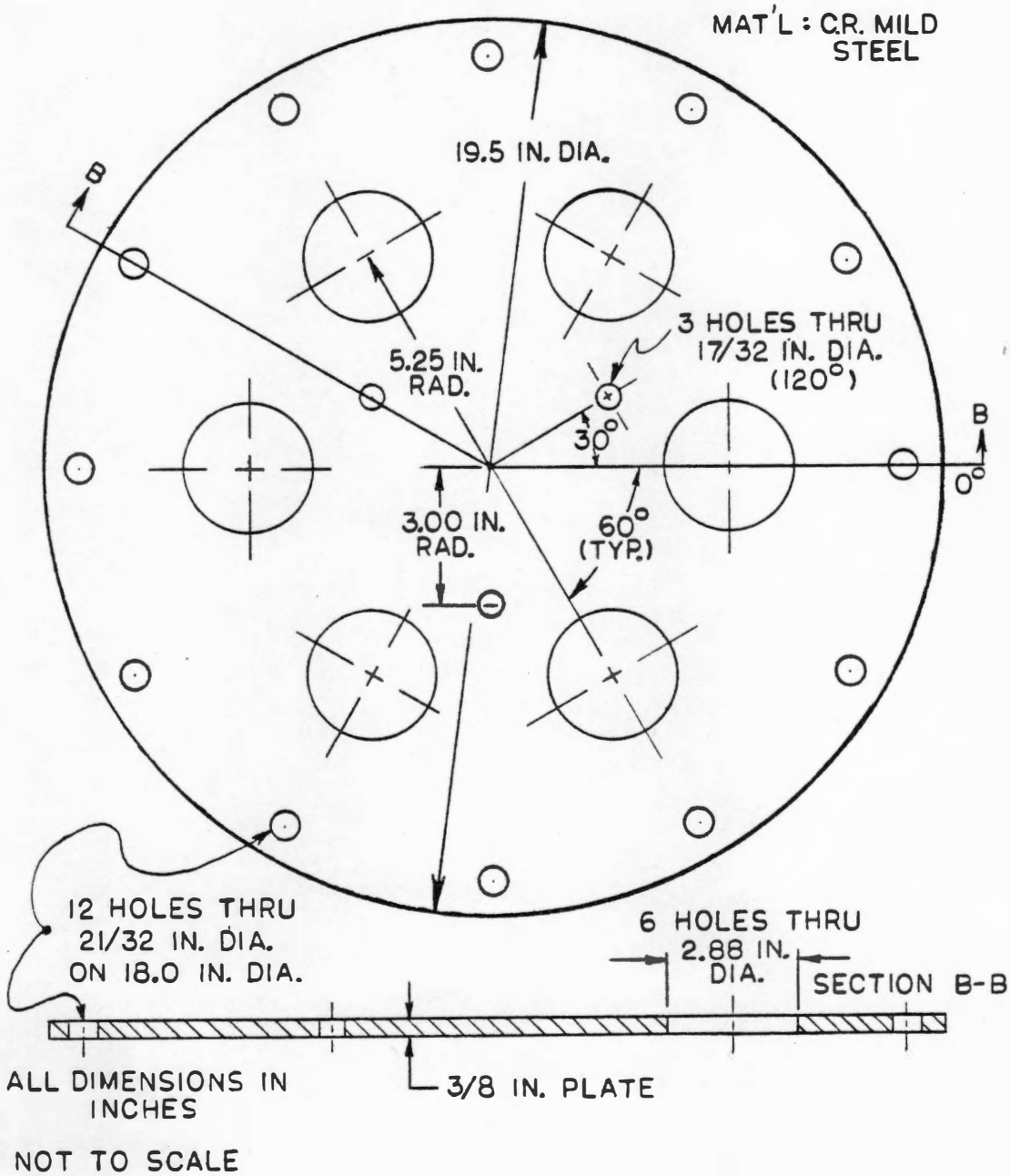

FIGURE 7.32

TVA 1:6 RECYCLE SPLITTER TOP

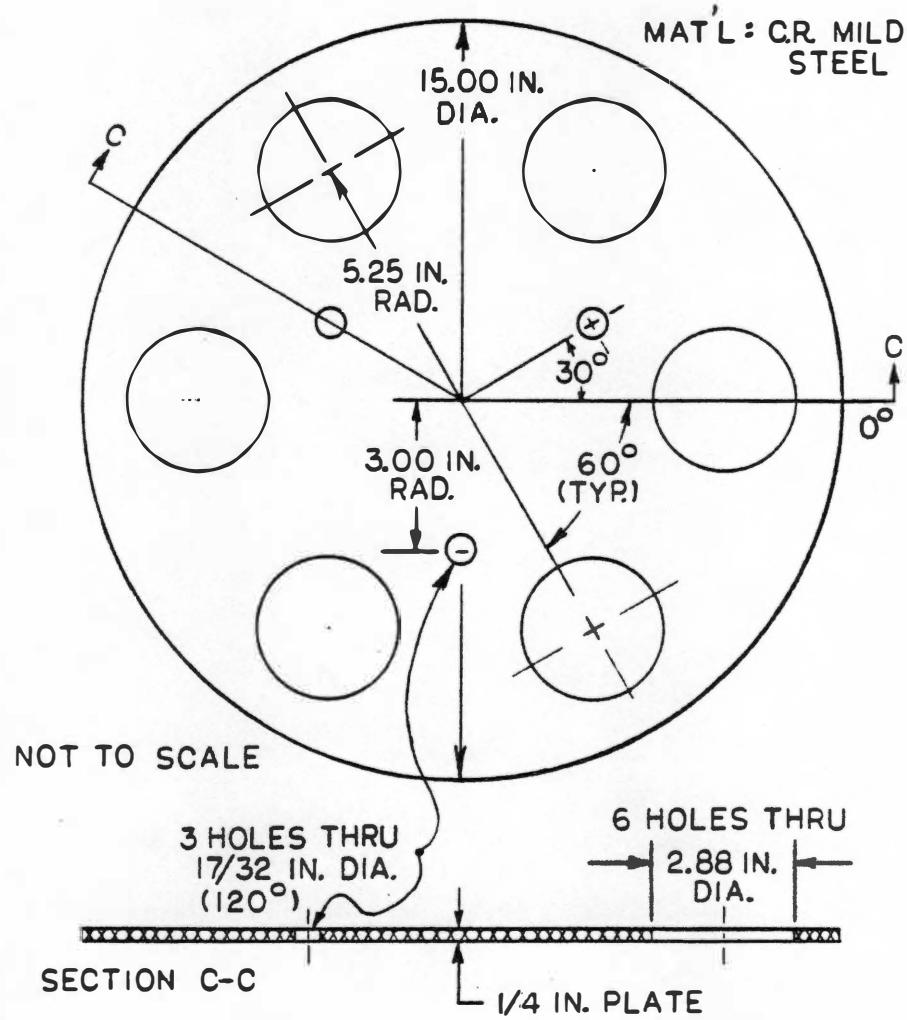

NOTE: TO BE USED IN INITIAL INSTALLATION
ALL DIMENSIONS IN INCHES

FIGURE 7.33

TVA 1:6 RECYCLE SHIM PLATE

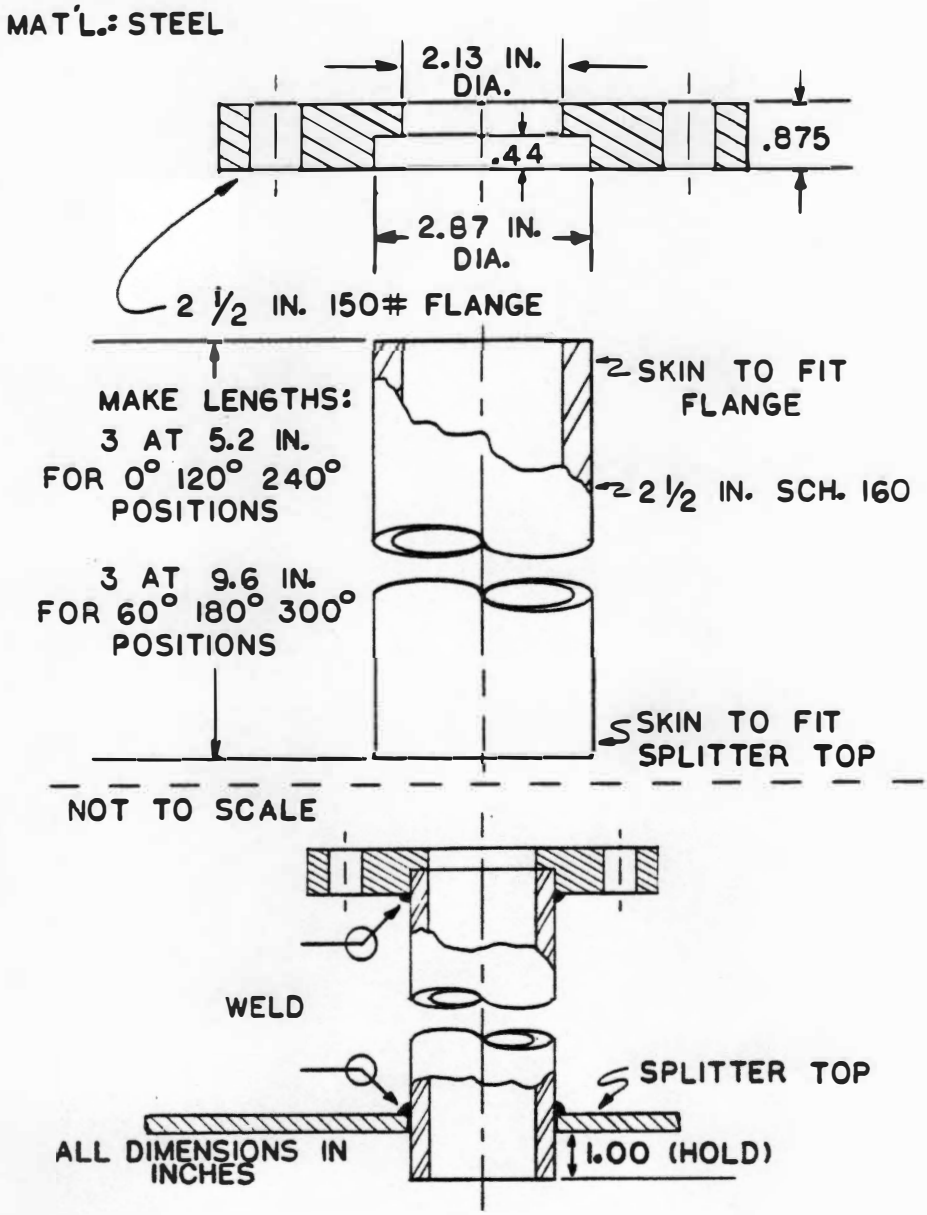

FIGURE 7.34

TVA 1:6 RECYCLE SPLITTER EXITS

post life, and a reinforcing cross top to prevent post bending and possible loss of a floating valve cap. The construction of the cage was described in Chapter 6.

From the valve cap wear characteristic testing, the wear rate of the valve caps was shown to be a strong function of recess depth. The wear tests conducted simulated operating conditions in compartments A-D at the Pilot Plant. A recess depth of 0.43 inches was shown to have far superior wear resistance compared to a recess depth of 0.25 inches. Since the recycle feedline solids velocity is expected to be comparable to the feedline solids velocity in compartments A-D, a recess depth for the recycle valve cap was chosen to be 0.43 inches. A stellite surfacing is also recommended to provide additional wear resistance. It is expected that the recycle floating valve caps will operate in a fully open position with solids and transport air based on typical operating conditions given by TVA. The proposed recycle floating cap and cage are shown in Figures 7.35 and 7.36.

Recommendations

As with both the UT 1:3 PVC splitter and the TVA 1:3 compartments A-D splitter, the vertical directed exit feedlines result in a simpler downstream piping system. The proposed recycle feed system consist of straight piping sections and controlled turning sections where the solids would wear upon themselves. This design philosophy uses 45 degree wyes in place of the varied angled ceramic bends originally used in the recycle system at the Pilot Plant. The proposed recycle feed system for a single feedline is shown in Figure 7.37. The recycle feedline system concept proposed is identical to the feedline system proposed for the compartment D feed system, which was described in

FOR 2 1/2 IN. SCH. 160 RECYCLE LINES

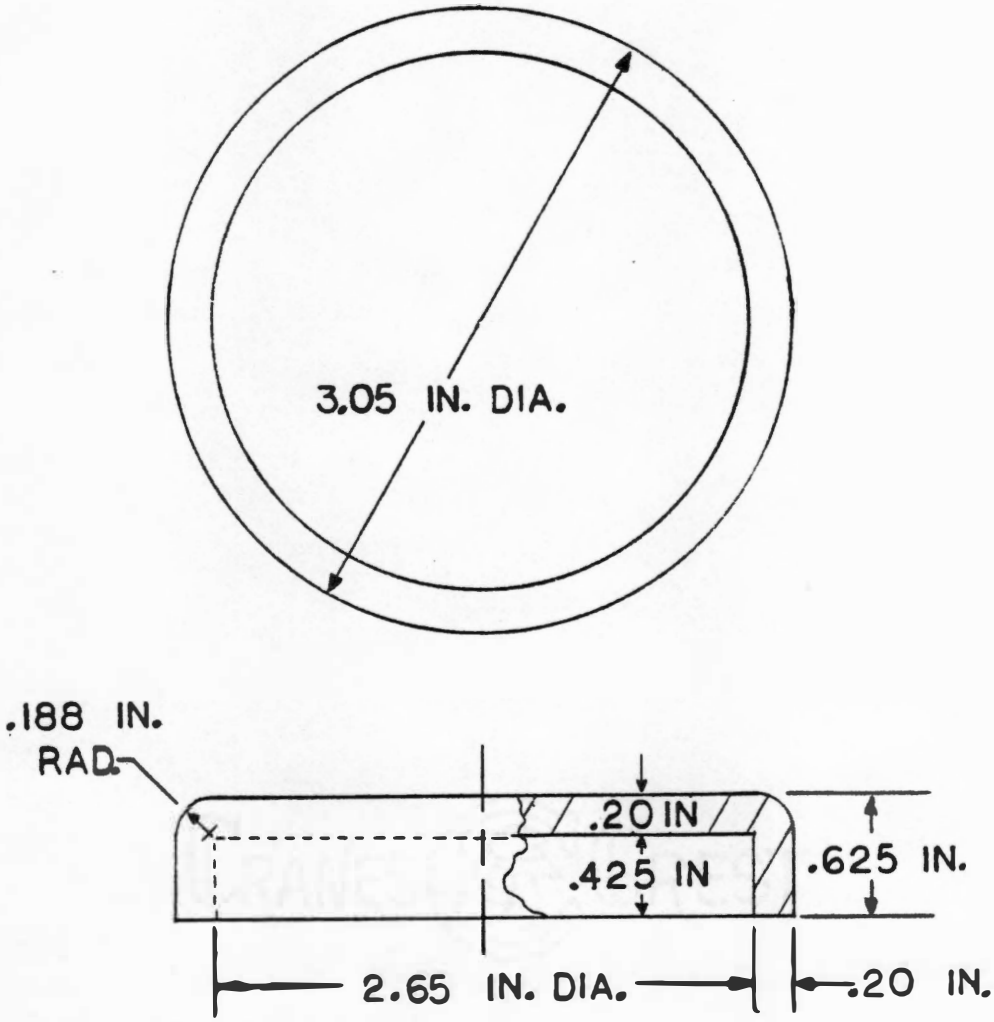

EST. WT.: 285 GRAMS

FIGURE 7.35

PROPOSED RECYCLE CAP

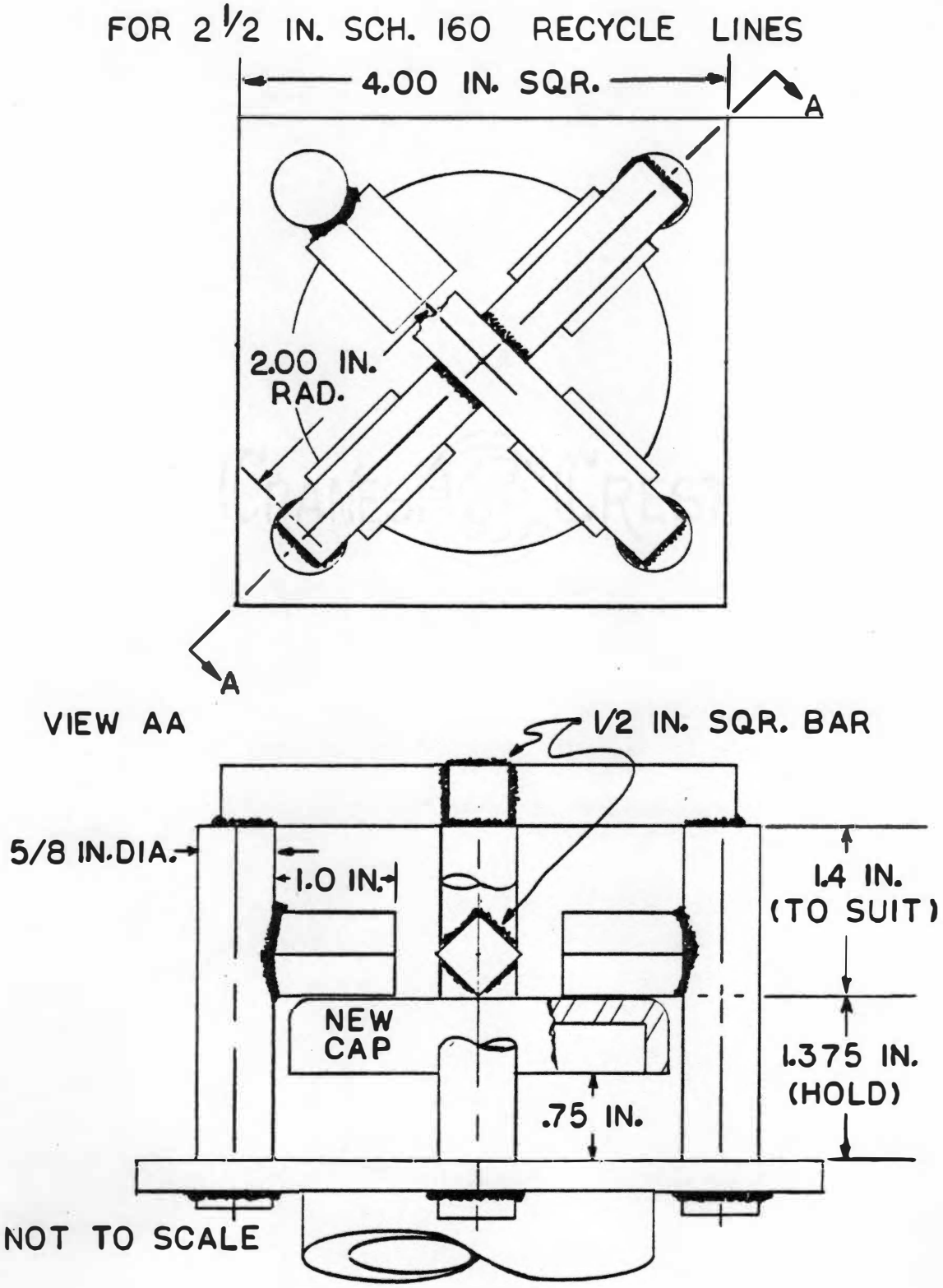

FIGURE 7.36

RECYCLE FEED NOZZLE CAGE

(FOR 2 1/2 IN. SCH. 160 RECYCLE LINES)

SCHEMATIC

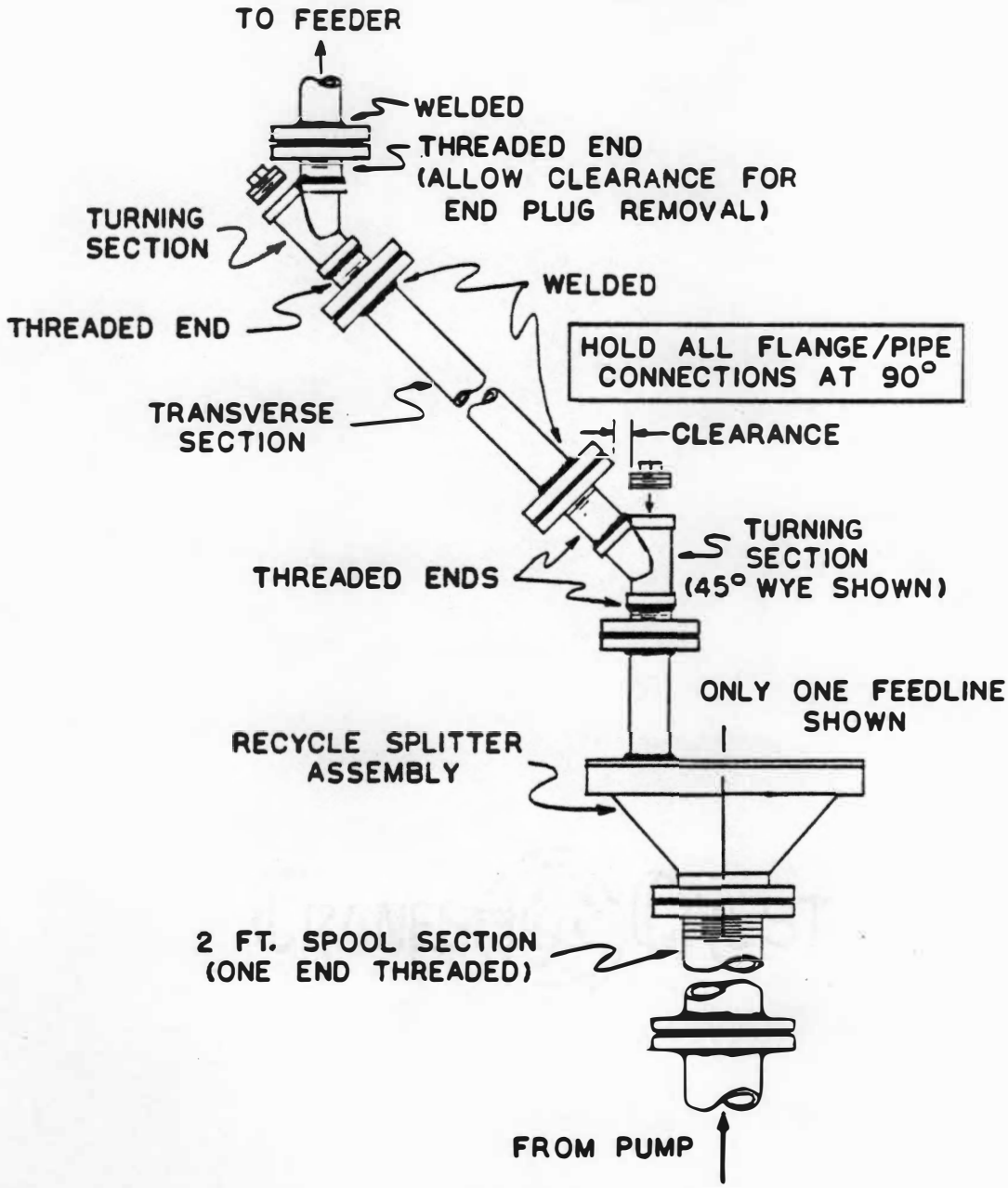

FIGURE 7.37

PLANAR RECYCLE FEED SYSTEM

detail in the previous section. The main differences between the two proposed systems are the size and number of the exit feedlines and related hardware. The proposed recycle feedline system was followed by TVA with the following exceptions. The threaded straight pipe sections both upstream and downstream of the 45 degree wyes, and upstream of the recycle splitter were not used. All pipe to flange connections were welded. The threaded pipe sections were included in the proposed feed system to allow for easy turning section and flange bolt alignments. But as long as proper alignment is maintained with the welded joints, there will be no difference in the feed system design concepts or performance.

In order to obtain simple pipe paths and near equal lengthed exit feedlines, the recycle splitter would be relocated. The ideal location is the approximate geometric center of the six recycle exit ports. However, the relocation of the recycle splitter would have been an extremely difficult task, and therefore, the original 1:3 recycle splitter location was used for the new 1:6 recycle splitter and corresponding feed system. Since each feedline travels around 18.5 feet vertically (from splitter elevation to center-line elevation of the distributor plate), these are only small differences in total exit feedline lengths whether using the current or ideal splitter location. The total length of each feedline was computed for both the current and ideal recycle splitter locations. The results are summarized in Figure 7.38. The feedline lengths for both the current and ideal locations were compared as a percent difference from the average length. The maximum percent difference for the current 1:6 recycle splitter location is 10.7 percent, compared to 2.4 percent for the ideal splitter location. The ideal splitter location is certainly an improvement, but a more useful comparison can be made using the results of the UT 1:3 PVC

• Existing recycle feed points
∘ Assumed location of new recycle feed points

CURRENT PLACEMENT

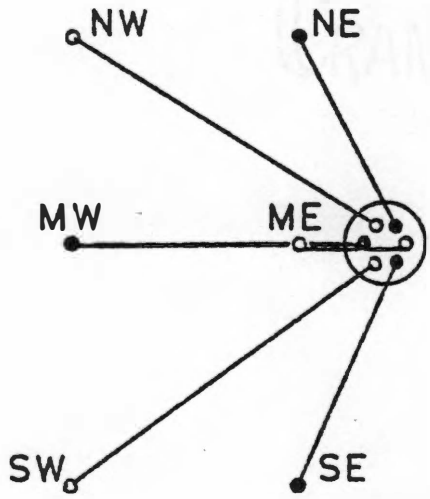

Location	Length	% Diff. from Mean	Max. Diff.
NW	21.46'	3.61	
NE	20.46'	-2.13	
MW	20.93'	1.05	
ME	19.43'	-6.19	10.67%
SW	21.64'	4.48	
SE	20.54'	- .83	
Total:	124.27'		
Mean:	20.71'		

IDEAL PLACEMENT

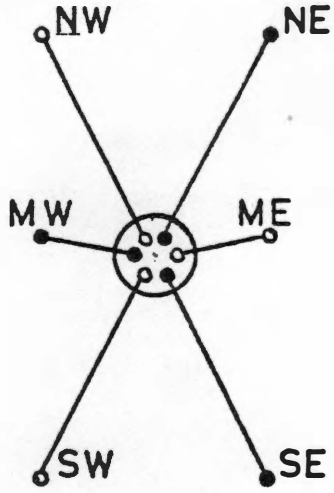

Location	Length	% Diff. from Mean	Max. Diff.
NW	20.40'	.81	
NE	20.40'	.81	
MW	19.91'	-1.62	
ME	19.91'	-1.62	2.43%
SW	20.41'	.81	
SE	20.41'	.81	
Total:	121.42'		
Mean:	20.42'		

FIGURE 7.38

TVA 1:6 RECYCLE PIPING PATH LENGTHS

splitter testing. One set of feedline lengths tested did have maximum percent differences equal to 11.7 percent, comparable to the 10.7 maximum percent difference for the current 1:6 recycle splitter location. Two tests were conducted with this set of feedline lengths, corresponding to test numbers 29 and 30 shown in Table 7.4, page 89. The split equality for these two tests ranged from +5.5 to -5.0 percent, well within the current ± 10 percent criteria used by TVA. Therefore, even though the current location is not the optimum location for the 1:6 recycle splitter, the split equality at the current location should fall within the ± 10 percent criteria used by TVA.

The 1:6 recycle splitter was painted with a high temperature resistant paint prior to installation in the new recycle feed system at the TVA Pilot Plant. By painting, a wear study can be conducted after 100 to 200 hours of operation by simply removing and disassembling the splitter. An inspection could provide information for any improvements needed in the 1:6 recycle splitter design.

Conclusions

TVA's immediate need of a 1:6 recycle splitter provided an excellent opportunity to test the concepts of the new 1:6 recycle splitter design. The two principle design features of the design are the internal recessed cone and the vertical exit feedlines. By testing the design in an operating AFBC facility, the actual performance and wear characteristics of the new splitter design can be determined. In addition, a splitter downstream feed system that consists of only 45 degree wye turning sections and straight pipe sections could be tested. In this way, the future potential of both the new splitter design and corresponding feed piping system can be determined.

It should be emphasized that the choice of the new 1:6 recycle splitter location was not the optimum location. If this type of feedline splitter is used in the future for new AFBC facilities, the splitter should be located near the geometric center of the feed ports. This location would best equalize exit feedline lengths, thus optimizing the split equality obtainable for the feed system.

CHAPTER 8

CONCLUSIONS AND RECOMMENDATIONS

The wear testing of PVC constructed components with a limestone feed stock has proven to be a successful means for assessing new wear resistant designs in a short time period. The wear testing of long radius 2 inch diameter PVC bends has shown there exists a strong relationship between the transport velocity and solids mass flow rate to the wear rate of the bends. In fact, the wear rate of the bends was found to be approximately proportional to the cube of the transport velocity for a given solids mass flow rate of 2740 lb/hr and transport velocities ranging from 58 to 96 ft/sec. A single wear test was conducted on a 2 inch diameter PVC bend at a solids mass flow rate of 3420 lbm/hr. From this test result, it was found that a 20 percent reduction in the solids to air mass ratio reduced the wear rate by 70 percent, about one half the effect of a comparable change in transport velocity.

A standard 45 degree wye PVC turning section was also subjected to long wear testing. This test result showed that the 45 degree wye was a high wear resistant design. In fact, a 50 fold increase in the life of the wye compared to a long radius bend is expected.

A preliminary testing program was conducted to determine the pressure drop characteristics of horizontal, upward 45 degree, and vertical solid transport through a PVC pipe (L/D of 40). In general, it was found that the pressure drop magnitude categorized in descending order were for vertical, 45 degree, and horizontal solid transport. The pressure drops that were experimentally measured included an acceleration of the solids, since the solids would most

certainly be accelerated after passing through a 90 degree tee or 45 degree wye. Unfortunately, there was no convenient means for determining the velocity of the particles; hence, a quantitative estimate of the pressure drop due to acceleration of the solids could not be made. It is recommended that for future testing, a means for measuring the solid particle velocity be implemented into the test program to determine this term. Also, testing should be made far downstream of any turning section to determine the pressure drop characteristics without solid acceleration.

The pressure drop of the 45 degree wye was found to be nearly 3 times that of a long radius bend. The pressure drops of a long radius bend and 45 degree wye were found to correspond to an equivalent feedline L/D of 5 and 15, respectively. It should be emphasized that the increased wear resistance of the 45 degree bend far outweighs the additional pumping cost.

Two PVC floating valve caps were subjected to similar wear tests to determine the effect of recess depth to the wear of the floating caps. It was found that a recess depth of 0.43 inches improved the wear resistance by a factor of 6 to 7 compared to a recess depth of 0.25 inches. Thus, a floating valve cap with a recess depth of 0.43 inches is strongly recommended.

A design of a new feedline splitter was also conducted. A new 1:3 PVC splitter design was constructed and tested to determine the splitter's wear characteristics and split equality. The testing showed the new splitter design was very resistant to wear. In fact, there was no discernable wear of any PVC material after 10 hours of testing. In comparison, long radius PVC bends wore to failure in as little as 5 hours.

The split equality testing showed there was a definite relationship between the splitter's exit feedline lengths and the split equality. A

theoretical approach for predicting the split equality was conducted based on a multiple parallel flow system. This technique reasonably matched the experimental data and thus can be used for design purposes to estimate the split equality. It is recommended that additional testing be conducted at different operating conditions to determine the general validity of this approach. Testing showed that for equal exit feedline lengths, the split equality can be expected to be within $\pm$ 5 percent.

Two new steel feedline splitters were designed for replacement of the feedline splitters currently used at the TVA Pilot Plant. The first design was a 1:3 feedline splitter to be used in compartments A-D. The second design was a 1:6 feedline splitter that was installed in the modified recycle system at the TVA Pilot Plant. After 486 hours of operation, the new 1:6 recycle splitter has shown great promise. The 1:6 recycle splitter has not plugged, and more significantly, has not shown any observable signs of wear.

LIST OF REFERENCES

LIST OF REFERENCES

1. Culp, A. W., Jr., Principles of Energy Conversion, McGraw-Hill Inc., 1979.

2. Statistal Abstract from the U.S. DOE Annual Report to Congress, 1979.

3. Babcock and Wilcox, Steam/Its Generation and Use, New York, New York, 1978.

4. Ehrlich, S., "History of the Development of the Fluidized-Bed Boiler," The Proceedings of the Fourth International Conference on Fluidized-Bed Combustion, published by MITRE Corp., May 1975, pp. 15-20.

5. TVA, Campaign I Report, Volume I Technical Summary, July 1, 1982 - April 6, 1983.

6. Wilkerson, H.J. and R. J. Krane, "State-of-the-Art Coal and Limestone Feeding for Atmospheric Fluidized Bed Combustion," prepared for TVA/DOE, September 24, 1979, ME-AFBC-79-1.

7. TVA, Campaign II Interim Report Technical Summary, April 7 - September 17, 1983.

8. TVA, Campaign I Report, Volume II, July 1, 1982-April 6, 1983.

9. Henry, Rodney L., Combined Feeding of Coal and Air to a Model Fluidized Bed Using Valve Caps," Master's Thesis, The University of Tennessee, Department of Mechanical and Aerospace Engineering, March 1981, ME-AFBC-81-5.

10. Knox, Gary D., "Combined Fluidization and Coal Feeding in a Model Fluidized Bed - - Pipe Grid Feeder," Master's Thesis, The University of Tennessee, Department of Mechanical and Aerospace Engineering, March 1981, ME-AFBC-81-4.

11. Bolz, R. E. and G. L. Tuve, Handbook of Tables for Applied Engineering Science, 2nd ed., CRC Press, Cleveland 1973.

12. Jones, P.J. and L.S. Leung, "Estimation of Saltation Velocity in Horizontal Pneumatic Conveying - A Comparison of Published Correlations," Pneumotransport 4, Fourth International Conference on the Pneumatic Transport of Solids in Pipes, Paper C1, June 26-28, 1978, pp. C1-1 - C1-12.

13. Rizk, F. "Pneumatic Conveying at Optimal Operation Conditions and a Solution of Barth's Equation," organized by BHRA Fluid Engineering, Cranfield, paper D4, April 1976.

14. Zenz, F. A., "Conveyability of Materials of Mixed Particle Size," I & EC Fundamentals, Vol. 3, February 1964, pp. 65-75.

15. Finnie, I., Proc. 3rd U.S. Nat. Conf. Applied Mech., Washington: ASME, pp. 527-532.

16. Andrews, D.R., "An Analysis of Solid Particle Erosion Mechanisms," Journal of Physics, 1981, pp. 1979-1991.

17. Neilson, J.H. and A. Gilchrist, Wear II, 1968, pp. 123-143.

18. Bitter, J.G.A., Wear 6, 1963a, pp. 5-21.

19. Finnie, I., "Erosion of Surfaces by Solid Particles," Wear 3, 1960, pp. 87-103.

20. Sheldon, G.L. and I. Finnie, "The Mechanism of Material Removal in the Erosive Cutting of Brittle Materials," Journal of Engineering for Industry, November 1966, pp. 393-401.

21. Rosenberg, J., "Resistance of Steels to Abrasion by Sand," Trans. Am. Soc. Steel Treating, I8, 1930.

22. Wahl, H. and F. Hartstein, Strahlverschleiss, Frankh' sche Verlgshandlung, Stuttgart, 1946.

23. Hemphill, W.K. and H.J. Wilkerson, "Wear Effects on Compartment D 3 Inch Diameter, Horizontal to Vertical Twin 45° Wye Turning Section," Letter to TVA, University of Tennessee, April 1984.

24. Daw, C.S., et.al., "Atmoshperic Fluidized Bed Combustion Coal Feeding Test Program," Oak Ridge National Laboratory, 1980.

25. Roberson, J.A. and C.T. Crowe, Engineering Fluid Mechanics, Houghton, Mifflin Company, Boston, Massachusetts, 1975.

26. Hinkle, B.L., "Acceleration of Particles and Pressure Drops Encountered in Horizontal Pneumatic Conveying," Ph.D. Disseration, Georgia Institute of Technology, Atlanta, GA., 1953, 166 pp.

27. Kress, Reid, L., "A Valve Cap Coal Feeder for Fluidized Beds," Master's Thesis, The University of Tennessee, Department of Mechanical and Aerospace Engineering, May 1982, ME-AFBC-82-6.

28. Hilbert, J.D., Jr., "Multiple In-Line Splitting of Pneumatic Conveying Pipelines," Journal of Pipelines, 3, 1982, pp. 161-172.

29. White, F. M., Fluid Mechanics, McGraw-Hill Publishing Company, 1979.

30. Oak Ridge National Laboratory, Report ORNL/7724, September 1981.

31. Holman, J.P., Experimental Methods for Engineers, McGraw-Hill Publishing Company, New York, New York, 1978.

APPENDICES

APPENDIX A

SPLITTER FLOW AREA COMPUTATION PROCEDURE

The flow area progression through the splitter body is an important design parameter. Since the transport velocity is inversely proportional to the flow area, the transport velocity through the splitter body is dictated by the flow area. A low transport velocity is desirable to reduce the wear rate of the splitter, but the transport velocity through the splitter body must be maintained safely above the saltation velocity of the solids medium. Thus, a means for calculation of the flow area was crucial to the successful operation of the splitter.

The solids flow was taken to flow in a parallel path to the walls of the main splitter body and recessed cone. Therefore, the flow area at any given elevation is the surface area of a frustrum of a cone. The gap between the recessed cone and main splitter body serves as the slant height for the frustrum of the cone. A single sample calculation follows for the UT 1:3 PVC splitter. The calculation procedure is identical for both the beds A-D 1:3 and the recycle 1:6 splitters.

Using an elevation height (y) equal to 1.0 inch, the flow area of for 0.75 inch gap is : (Ref. Figure A-1). Note: All dimensions in inches unless noted.

r_1 = recess radius + y x tan (40°)

r_1 = 1.25 + 1.0 x tan (40°)

r_1 = 2.089

r_2 = r_1 + gap x cos (40°)

r_2 = 2.664

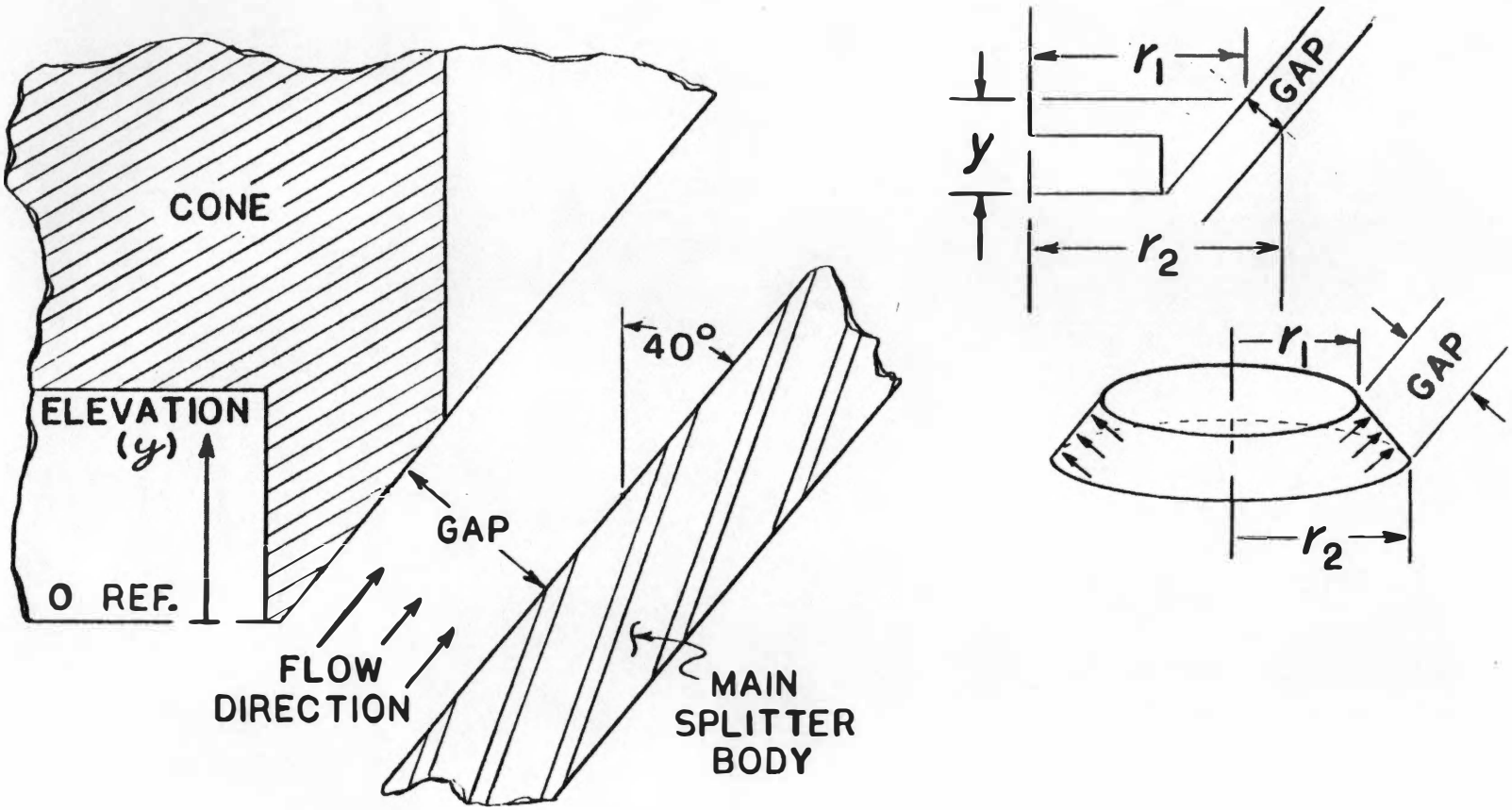

FIGURE A.1

FLOW AREA CALCULATION NOMENCLATURE

Flow area (A) $= \pi (r_1 + r_2) \times \text{gap}$

$A = \pi (2.089 + 2.664) \times (0.75)$

$A = 11.20 \text{ in}^2$

APPENDIX B

UNCERTAINTY ANALYSIS

There is always some uncertainty associated with experimental work due to inaccuracies in instrumentation. The uncertainty of a calculated term can be determined by the method of Kline and McClintock given in Holman [31]. Let R be a function of n independent variables X_1, X_2, ...X_n. Let the uncertainty of each of these variables be denoted W_1, W_2, ...W_n. The uncertainty of a calculated value, R, is then given by W_r and is determined by equation B.1.

$$W_R = [(\frac{\partial R}{\partial x_1} W_1)^2 + (\frac{\partial R}{\partial x_2} W_2)^2 + \ldots + (\frac{\partial R}{\partial x_n} W_n)^2]^{1/2} \qquad \text{B.1}$$

This equation was used to determine the uncertainty of calculated values.

Table B.1 lists the measurements used to calculate the results of this study and the corresponding instrument identification and uncertainty. The uncertainties listed are based on operator experience and the least count of the instrument.

The transport air volumetric air flow rate is given by

$$Q_{TA} = KA_o \ (2g\Delta h)^{1/2} \qquad \text{B.2}$$

where K is the orifice coefficient, A_o is the orifice area, g is gravitional acceleration, and Δh is the orifice differential pressure. The orifice was designed to give an orifice coefficient of 0.65. The uncertainty in K is estimated to be 0.02 and the uncertainty in A_o is 0.005 square inches. The resulting uncertainty in the transport air volumetric flow rate is $\pm$ 4 cfm.

Table B.1

Instrument Uncertainties

Instrument	Measurements	Range	Least Count	Uncertainty
Water Manometer	Transport Air Orifice Differential Pressure	0 - 30 in. H_2O	0.1 in. H_2O	$\pm$ 0.1 in. H_2O
Water Manometer	Feedline Differential Pressure	0 - 30 in. H_2O	0.1 in. H_2O	$\pm$ 0.3 in. H_2O
Mercury Barometer	Ambient Air Pressure	25.5-32.7 in Hg	.01 in Hg	$\pm$ .03 in Hg
Barometer Thermometer	Ambient Air Temperature	-10 - 120° F	2° F	$\pm$ 1° F
Tachometer, Reliance Electric Company	Limestone Feed Rate	0 - 155 rpm	5 rpm	$\pm$ 2 rpm
Weight Scale	Limestone Weight	0 - 1000 lb.	0.5 lb	$\pm$ 0.5 lb

The uncertainty in the calibration of the volumetric limestone feeder was determined from the calibration and splitter testing results. Repeatibility tests indicated a limestone feed rate uncertainty of 30 lb/hr for an angular speed setting of 20 to 60 rpm.

The uncertainty in the wear rate results is influenced by several factors. The shape, size, and hardness of the wearing medium (limestone), and the hardness of the surface being worn certainly effect the results. PVC material was used in all wear tests, and it was assumed that there was very little difference in the hardness of the test sections. Fresh batches of limestone was periodically added to the base feed stock to provide a near uniform feed for each wear test. Still, some differences in the feed stock were inevitable. It was estimated that the uncertainty in the wear results are within $\pm$ 20 percent of the reported results.

VITA

Warren R. Gilbert, Jr. was born in Shelbyville, Tennessee on January 12, 1958. He attended school in Bedford County and graduated from Shelbyville Central High School in 1976. Then, he entered The University of Tennessee, Knoxville in order to pursue a B.S. degree in mechanical engineering. During his undergraduate career, he co-oped for ARO, Inc. at the Arnold Engineering Development Center.

In June 1981, he received the Bachelor of Science degree in Mechanical Engineering at The University of Tennessee, Knoxville. Shortly afterward, he began work for TVA and worked at both the Hartsville and Watts Bar Nuclear Plants.

On June 26, 1982, he married a long time sweetheart, the former Mary K. Taylor, also of Shelbyville, Tennessee.

In September 1982, he returned to The University of Tennessee, Knoxville and began work toward the completion of a Master of Science degree in Mechanical Engineering. Upon completion of the degree in June 1984, he plans to move to Tullahoma, Tennessee where he has accepted a job with Arvin Calspan.