To the Graduate Council:

I am submitting herewith a thesis written by Nicole Alexandra Pérez entitled "The Construct of Sensory Suggestibility: A Factor Analysis." I have examined the final paper copy of this thesis for form and content and recommend that it be accepted in partial fulfillment of the requirements for the degree of Master of Arts, with a major in Psychology.

Michael R. Nash, Major Professor

We have read this thesis
and recommend its acceptance:

Accepted for the Council:

Vice Chancellor and
Dean of Graduate Studies

Thesis
2006
.P37

THE CONSTRUCT OF SENSORY SUGGESTIBILITY:

A FACTOR ANALYSIS

A Thesis

Presented for the

Master of Arts

Degree

The University of Tennessee, Knoxville

Nicole Alexandra Pérez

August 2006

DEDICATION

This thesis is dedicated to my loving husband, Gustavo Camoirano for encouraging, supporting, and believing in me through every step of this part of the journey. Also, to all my siblings, Mario R. Pérez, Priscilla J. Ruiz and Victoria L. Perez; their vision of what I can accomplish has always inspired me to do great things.

ACKNOWLEDGMENTS

I wish to all of the members in my committee, Dr. Michael R. Nash, Dr. Robert G. Wahler, and Dr. Derek Hopko, for all their guidance through the process of designing, writing and defending this project. I would also like to thank Dr. Anthony F. Tasso for introducing me to the topic of "suggestion" and "suggestibility" and allowing me to exercise my own curiosities through his research vision. Finally, I would like to thank my loving husband Gustavo A. Camoirano for his hard work and dedication in the construction and replication of the measures used in this study. His creativity and endless support helped put together what we envisioned.

ABSTRACT

The construct of "suggestibility" has garnered great interest in the field of psychology over the years. It has been invoked as an explanatory construct in social, clinical, and forensic psychology. Yet, the nature of the construct and of its factor structure is unclear. In an earlier study we operationalized suggestibility by measuring conformity, interrogative suggestibility, placebo effects, persuasibility and hypnotizability. There was no discernible factor structure. In the present study, we narrowed our focus to sensory suggestibility alone expecting to find some cohesion among responsiveness to these types of suggestive situations by examining this phenomenon across eight sensory measures (tactile, auditory, visual and olfactory). Additionally, we investigated the relationship between hypnotizability and the sensory suggestibility measures used. We applied factor analytic methodologies using Analysis of Movement Structures (AMOS) and found no support for a unitary or multi-factorial solution. None of the sensory measures used in this study correlated with hypnotizability. Results and implications of these findings are discussed.

TABLE OF CONTENTS

Chapter Page

1 **LITERATURE REVIEW** 1

Introduction 1

History of Suggestion and Suggestibility 1

Factor Analytic Studies of Suggestibility 4

Classic Factor Analytic Studies 4

Contemporary Factor Analytic Studies 9

History of Sensory Suggestibility 10

Sensory Suggestibility Study 13

Purpose of the Present Study 13

Hypothesized Factor Structures 13

2 **METHODOLOGY** 15

Research Design 15

Participants 15

Procedures 16

Sensory Suggestibility Measures 17

Procedures for the Administration of the Tactile Measures 18

Procedures for the Administration of the Visual Measures 19

Procedures for the Administration of the Olfactory Measures 21

Procedures for the Administration of the Auditory Measures 22

Scoring of the Sensory Suggestibility Measures 23

3 RESULTS 25

Preliminary Analysis 25

Data Management 25

Correlations 26

Structural Analysis 27

Exploratory Structural Analysis 27

Confirmatory Structural Analysis 30

Reliability Analysis 36

Miscellaneous Analysis 37

4 DISCUSSION 39

Conclusions and Discussion 39

Limitations of the Present Study and Future Directions 41

LIST OF REFERENCES 43

APPENDICES 59

VITA 80

LIST OF TABLES

Table Page

A-1. Summary of Classic Factor Analytic Studies on Suggestibility 61

A-2. Hypothesized Factor Structures 62

A-3. Sensory Suggestibility Measures 63

A-4. Distribution of the Dichotomous Variables 64

A-5. Distribution of the Continuous Variables 64

A-6. Correlation Matrix of Dichotomous Variables 65

A-7. Correlation Matrix of Continuous Variables 66

A-8. Communalities Among the Dichotomous Variables 67

A-9. Total Variance Explained for the Dichotomous Variables 67

A-10. Initial Factor Solution for the Dichotomous Variables 68

A-11. Rotated Factor Solution for the Dichotomous Variables 68

A-12. Communalities Among the Continuous Variables 69

A-13. Total Variance Explained for the Continuous Variables 69

A-14. Initial Factor Solution for the Continuous Variables 70

A-15. Rotated Factor Solution for the Continuous Variables 70

A-16. Level of Difficulty of the Sensory Measures Before Adjustment 71

A-17. Level of Difficulty of the Sensory Measures After the Adjustment 71

A-18. Standardized Regression Weights for the One-Factor Model of Dichotomous Variables 72

A-19. Regression Weights Significance Levels for the One-Factor Model of Dichotomous Variables 72

A-20. Standardized Regression Weights for the Two-Factor Model of Dichotomous Variables 73

A-21. Regression Weights Significance Levels for the Two-Factor Model of Dichotomous Variables 73

A-22. Reliability Analysis of the Dichotomous Variables 74

A-23. Reliability Analysis of the Continuous Variables 75

A-24. Reliability Analysis of the Adjusted Variables 76

CHAPTER 1

LITERATURE REVIEW

Introduction

The study of "suggestion" and "suggestibility" has a venerable position in the history of psychological science. The notion of suggestion is again garnering attention in a number of sub-specialties within psychology: forensic, social, perception, cognition/sensation, psychotherapy outcome, and placebo effects. It is therefore timely to acknowledge that several problems still exist when we evoke the construct of suggestion. In spite of its use in the literature, there is little agreement on what lies within and outside the domains of "suggestion" and "suggestibility". Its definition remains ambiguous, lacking clear characteristics that specify its boundaries. The present is takes a fresh empirical look at the construct of "suggestion" and suggestibility" by narrowing its focus to sensory suggestions.

History of Suggestion and Suggestibility

Over the years suggestibility has been defined in many ways. For example, in 1908 MacDougall defined suggestibility as "a process of communication resulting in the acceptance with conviction of the communicated proposition in the absence of logically adequate grounds for its acceptance". Years later, the concept of suggestion and suggestibility was defined again by Eysenck (1947) as "a process of communication during which one or more persons cause one or more individuals to

change (without critical response) their judgments, opinions, and attitudes. The latter has been more broadly defined by the same author as "the individual degree of susceptibility to influence by suggestion and hypnosis". More recently in 1991, the construct of "suggestion" has been defined by Schumaker (1991) as "a term used to indicate a person's propensity to respond to suggested communications".

The dilemma of defining the constructs of "suggestion" and "suggestibility" date back to the late 1700's when Fran Anton Mesmer of France used a technique which he named "animal magnetism" to treat persons suffering from physical and psychological disorders. This technique came under scrutiny. Benjamin Franklin and the Royal Commission found no scientific support for the effectiveness of "animal magnetism" (Franklin et al., 1785/1970) and concluded that Mesmer's idea of "redistributing fluids" was a result of "imagination" and "suggestibility". Similarly, in the late 19th century Berheim (1889) and Charcot (1882) contested whether hysteria was a product of suggestions or organic illness. Clearly, the theories and controversies of the 1700's and 1800's reflect just how unsettled the status of "suggestions" became in medical science. It was obvious that further investigation was required. Researchers in the early 20th century approached the study of "suggestion" and "suggestibility" with an interest in defining the terms and mechanisms of the construct. It was during this time that the previously mentioned definitions began to emerge (i.e., MacDougall, 1908; Eysenck, 1947; Schumaker, 1991), along with multiple hypothesis generated by a series of factor analytic studies. Towne (1916) for example introduced the belief of "lack of rationality" postulating that "mental influence" caused a subject to think, behave, and feel without the use of

reason. Even lack of consciousness came into the mix of proposed mechanisms, when Whipple (1924) defined suggestion as the result of accepting an idea, even a flawed one, without conscious awareness. For some, a "suggestive effect" was dependant on the existence of a message (MacDougall, 1908); for others, others suggestion could occur in the absence of an explicit message (Binet, 1900; Whipple, 1924).

Researchers began to think about suggestibility as it relates to personality. Influenced by his work with Paris school children, Binet contended that suggestibility is a unitary trait. He argued that such a trait would be apparent in all areas of a persons' personality. In contrast, Tarde (1907) argued that suggestibility is learned and that the extent to which one is suggestible depends on a person's acquisition of attitudes and ideals. Such a debate remained unresolved by the series of studies that followed the first part of the century. Although, some researchers found empirical support for a general, unitary trait of suggestibility often referred to as the "g" factor of suggestibility (e.g., Averling & Hargreaves, 1921; Otis, 1923), others failed to replicate such findings (Brown, 1916; Estabrooks, 1929; Scott, 1910).

The notion of suggestibility as a unitary trait was challenged when Hull (1933), in spite of his previous arguments, offered definitions for two types of suggestions that involved two distinct mechanisms. The first was called "prestige suggestions". Prestige suggestions involved a "direct" suggestive communication where explicit changes in behavior were repeatedly suggested to the subject by the experimenter. An example of a prestige suggestion would be found in the Body Sway Test (i.e., a commonly used measure of suggestibility in classic studies of

suggestion) where the participant is asked to stand up-right with his/her eyes closed while the experimenter gives "direct" or explicit suggestions of falling forward: "you are falling forward, forward, falling, falling forward…" (Hull, 1929). Another classic suggestibility measure of this type of suggestion is Cherveul's Pendulum Test. Here, the subject is asked to hold a pendulum while the experimenter gives continuous suggestions for the pendulum to swing. The second type of suggestion defined by Hull (1929) was called "non-prestige suggestions". These were described as being "depersonalized" and therefore, did not involve the communication of a direct statement to the subject. An example of a non-prestige suggestion as intended by Hull would be the Progressive Weights Test, developed by Binet in 1900. In this test 15 identical boxes were presented to the subject. The first five boxes were progressively heavier (i.e., 3g, 5g, 10g, 15g, etc…), while the last 10 boxes had the same weight (i.e., 20g). The subject is asked to lift the boxes (one at a time) beginning with the lightest box. A measure of suggestibility is attained by the subject's report of any detectable discrepancies in weight among the last 10 boxes.

Factor Analytic Studies of Suggestibility

Classic Factor Analytic Studies

In response to Hull (1933) early researchers turned to the newly developed factor analytic methodologies to study of "suggestion" and "suggestibility. These early investigators (MacDougall, 1908; Eysenck & Furneaux, 1945, Eysenck, 1947) categorized suggestion as being either "direct" or "indirect" in nature and investigated whether these two categories might in fact be facture. Although the

"primary" suggestibility measures have often been associated with hypnotic susceptibility, the secondary measures have not been well explored. Table A-1 (see Appendix A for all Tables) provides a summary of the findings from the six classic factor analytic studies on this topic. Definitions of the types of suggestions, results of the six factor analytic studies and their implications are discussed below.

The first comprehensive factor analytic study was by Eysenck and Furneaux in 1945. This study used a sample of 60 army veterans who were inpatients at a hospital for the treatment of "nervous disorders". Using twelve suggestibility tests, this experiment derived two factors. The first factor accounting for fifty-five percent (55%) of the variance included the Body Sway, Arm Levitation, and Chevreul's Pendulum tests, all of which were labeled by the authors as being measures of "Primary Suggestibility". A term that they defined as involving the explicit communication of a suggestion (i.e., "you are falling forward, forward, falling forward, forward…") using measures that had an ideo-motor component, analogous to what Hull (1900) had previously defined as a "Prestige Suggestion". The second emerging factor accounted for twenty percent (20%) of the variance. Loading on the latter were the Progressive Weights test and the Odor tests. Such a factor was labeled as "Secondary Suggestibility" because of its lack of directive communication from the experimenter. This type of suggestion was also referred to by Eysenck and Furneux as "gullibility" (Eysenck & Furneux, 1945) and was analogous to what Hull (1900) has defined as "non-prestige suggestions". Eysenck & Furneaux's (1945) study at best revealed a "Primary Suggestibility" factor that held together reasonably well (i.e., intercorrelation coefficient +.50), with the Body Sway Test and the

Hypnosis measure loading the highest. However, the so-called "Secondary Suggestibility" factor was not as sturdy, yielding an intercorrelation coefficient of +.15. Even more interesting was the fact that the two highest loadings on this factor were the Odor test and the Inkblot Suggestion Task with a correlation between the two measures of only +.02.

The findings of a second factor analytic study performed by Grimes (1948) differed from those of the earlier study (Eysenck & Furneux, 1945). Using a sample of 233 orphan boys and generally a different set of suggestibility tests (only three of the measures in this study had been used in Eysenck & Furnaux's 1945 study), Grimes found no clearly delineated suggestibility factor. Similar results were found by Benton and Bandura (1953) in a study in which 50 subjects (50% male) were administered nine suggestibility tests. Using six tests that were the same as the ones used in the study by Eysenck and Furneaux (1945) and one test that had been previously used in Grime's (1948) study, the results of this experiment were unable to support a two-factor suggestibility structure.

Stukát (1958), who conducted three different factor analytic studies, found results closer to Eysenck and Furnaux's (1945) two-factor structure. In his first study which consisted of 67 children, 37 of them being boys (mean age 8.6 years-old) and 15 suggestibility measures, a first factor emerged (highest loadings were the Body Sway and the Hand Lowering tests) but there was little evidence of a "secondary" factor. Instead, there was some evidence for a third factor that was closer to what Eysenck and Furneaux (1945) had identified as "Secondary Suggestibility". This factor included as its highest loadings measures related to sensory and perceptual

experience. In Stukát's (1958) second study, which involved 184 girls (mean age 11 years-old) and the largest amount of suggestibility measures to date (twenty-four variables) again, there was support for a first factor. But, evidence for any other emerging factor was lacking.

Finally, in Stukát's third study in which a sample of ninety adults was used, the analysis of seventeen variables reveled yet again, a "primary" factor (highest loadings were the Body Sway and Hand Levitation tests, the first two studies used the Hand Lowering test). This time, although hinging on weak correlations, a second factor emerged that included measures involving contradictory suggestions like the Colors test (having participants state the specific color of a hue followed by false feedback regarding their answer), Co-judge Suggestions (where susceptibility to the opinion of a co-judge is measured), and an Indistinct Words Task. All of these measures involved in some way the use of judgments from the subject.

In an unpublished doctoral dissertation by Duke (1961) there were two emerging factors. Using ten suggestibility measures with ninety-one army veterans (mean age 58.5, raging from 34 to 72) from a residential facility, a first factor similar to Eysenck and Furneux's (1945) "primary" type surfaced with intercorrelations of +.36. The second factor had intercorrelations of +.145, which increased to +.21 by the exclusion of the Progressive Weights and Lines tests.

The last factor analytic analysis conducted during the hype of the "suggestion" and "suggestibility" research was conducted by Hammer, Evans, and Barlett (1963). Here, seventy-three undergraduates (24 were male) were administered thirteen measures of suggestibility. The analysis resulted in two factors

that were distinguished as "Ideo-motor" (with the highest loadings corresponding to the Arm Bending, Thumb Press, and Chevreul's Pendulum tests) and a "Vividness of Imagery" factor that included as its highest loadings the Heat Illusion and Heat Imagery tests. The first emerging factor (i.e., ideao-motor type) was similar to what had been previously labeled as primary suggestibility. The latter was described as a type of suggestion in which the suggested state or condition was simply accepted.

In sum, the early factor analytic studies were inconclusive and contradictory. While some researchers found questionable support for the first factor (i.e., direct/primary factor) outlined by Eysenck and Furneaux in 1945 (Stukát, 1958; Duke, 1961; Hammer et al., 1963), others found no evidence for a "secondary" or "indirect" factor. In some studies, there appeared to be no discernable factor structure at all (Grimes, 1948; Benton & Bandura, 1953). At best, in light of these findings we can conclude that: (1) suggestibility is not one thing and that (2) a person's response depends on the type of suggestion rather than on a "unitary" trait or "g" factor. Further, the limitations in making such conclusions must be considered. These studies differed in the quality of design and sample selection. For example, some studies included only army veterans who were identified as either being in a hospital or in a residential institution for physical or psychological ailments (Eysenck & Furneaux, 1945; Duke, 1961), while others examined young orphan males (Grimes, 1948). This renders any comparison of findings problematic. Additionally, these studies were inconsistent on the suggestibility measures used. While some researchers included variables that were similar to previous designs (e.g., Eysenck & Furneaux, 1945; Benton & Bandura, 1953) overall, the studies lacked congruence

making replication improbable. Replication is also limited by the imperfect demands of journal publication of the time. As a result, these studies did not clearly define their methodologies in the administration of measures (e.g. Body Sway, Hand Levitation, Progressive Weights, etc.).

Contemporary Factor Analytic Studies

Over 40 years lapsed between Duke's 1961 study and the next factor analytic study (Tasso, Pérez, Klyce, MacNeill and Nash, 2003) Due to equivocal findings in classical studies of suggestibility it was necessary to take a fresh empirical look at this construct using contemporary methodological and statistical techniques. The study by Tasso, et al. (2003) did precisely that. The authors intentionally used as many suggestibility measures as feasible from the classical studies. They also included some contemporary measures of suggestibility. Further, they selected suggestibility measures from all suspected factors. Nine measures were ultimately included in the design with hypnotizability, Chevreul's pendulum and the body sway tests, identified as typically loading on the first factor; the progressive weights, odor test and placebo response measure, identified as typically loading on the second factor; and persuasibility, interrogative suggestibility, and conformity tests, identified as typically loading on the third factor.

The sample in the Tasso, et al. (2003) study consisted of 110 undergraduate students (33 male and 77 female) with a mean age of 19.15 years-old and a standard deviation of 1.04 years-old. After applying confirmatory factor analysis, this study failed to support the three-factor structure delineated by Eysenck and Furneaux

(1945). Further, it did not confirm the vaguely supported two-factor structure identified by previous factor analytic studies. In fact, the conclusion was that no clearly delineated factor structure emerged. Instead, the authors cautioned theorists against using "suggestibility" as a unitary concept (i.e., because the measures seemed to be independent of each other) or referring to the construct as a clearly delineated "trait-like" component of personality (i.e., "g" factor).

History of Sensory Suggestibility

Historically, measures of suggestibility that elicit sensory experience have been incorporated in classic suggestibility studies (Hull, 1933; Wundt, 1892; Eysenck & Furneaux, 1945; Stukát, 1958; Hammer; Evans & Barlett, 1963; Hajek & Spacek, 1987; Gheorghiu, Hodapp & Ludwing, 1975; Gheorghiu, Grimm & Hodapp, 1978). For instance, the odor test is an example of a measure that assesses the subject's reactivity to suggestions based on sensory perceptions. In this test, six bottles labeled as containing different fragrances are presented to the subject. The last three bottles in the "set" do not contain an actual fragrance instead, they contain only water. Thus, a measure of suggestibility is attained from the subject's discernment of sensing an odor (or smell) from one or more of the three bottles that contain only water. While tests of this sort (i.e., sensory type) have been found to cluster together in what Eysenck and Furneaux (1945) referred to as a secondary type of suggestion, this is not always the case (Duke, 1961; Stukát, 1958; Hammer, Evans & Barlett, 1963).

In more recent studies, researchers have focused exclusively on sensory measures of suggestibility (Gheorghiu & Reyher, 1982; Gheorghiu, Koch, Filkovski,

Peiper & Moltz, 2001; Gheorghiu, Polczyk & Kappeller, 2003; Cautela & McLaughlin, 1965). Gheorgiou and Reyher (1982) developed an "indirect-direct" sensory suggestibility scale using 12 measures: three tactual (i.e., Glass test, Ring test and Hand Pricking test), four auditory (i.e., Tone test, Three-tone test, Simultaneous Watch test and Watch test) and five visual (i.e., Light test, Black Disk test, Half-field Light test and Dynamo Test). In this study the measures used were categorized as belonging to one of five types: (1) increasing intensity of the stimulus, where an actual stimulus is presented and the appearance of gradation occurs but without the actual increase of the implied stimulus (i.e., in the light test the subject is asked to observe a light-bulb that supposedly gets brighter by the experimenter's manipulation of a knob, a measure of suggestibility is obtained when the subject reports seeing the light-bulb getting brighter); (2) decreasing intensity of the stimulus, where an actual stimulus is presented and the appearance of gradation occurs but without the actual decrease of the implied stimulus (i.e., in the tone test the subject is presented with a tone of constant intensity while the experimenter suggests a decrease of intensity, a measure of suggestibility is obtained when the subject reports the tone getting lower); (3) simultaneous presentation with one pair omitted, where the subject is presented with the suggested stimulus simultaneously in both sides of the body but in fact, only one side of the body receives the actual stimulus (i.e., in the hand pricking test the subject is told that pricking will occur on both hands, yet only one hand is actually pricked – a measure of suggestibility is obtained when the subject reports pricking on both hands); (4) expectation of series without objective stimuli, were where a stimulus that doesn't actually exist is suggested to the subject (i.e., in the watch test

the subject is presented with a stop watch that supposedly "ticks" and a measure of suggestibility is obtained when the subject reports hearing the ticking of the watch); and (5) illusory cause and effect, where the illusion of an effect is suggested to the subject although the effect or result through manipulation never takes place (i.e., in the Dynamo Test subjects are presented with a bulb that supposedly gets brighter by the manipulation of a dynamo, the dynamo generates a tone that gets progressively louder).

Gheorguiu and Reyher (1982) reported a reliability coefficient of .75 with a test-retest correlation (n=60) of .71. The item analysis yielded significant correlation coefficients for all except two measures, the Glass test and the Rings test. Yet, an analysis of simple effects revealed the method of increasing intensity of the stimulus as being the easiest, while the method of decreasing intensity of stimulus appeared to be the most difficult. Additionally, because their tests were performed on both sides of the body, the emergence of what appeared to be a left side advantage was reported. Level of confidence in the response was also measured in this study using a dichotomous (certain / uncertain) measure, and it was reported that the subject's "certain" responses were reliably larger than the "uncertain" responses.

There were however, some limitations in this study. First, olfactory measures that have been included in classical studies of suggestibility were excluded (i.e., odor tests). Second, while the authors reported reliable scales, the twelve measures were in fact extracted from an original set of twenty-one items and were never cross validated. Third, factor analysis was not employed to determine if such measures do indeed form a coherent factor structure. Fourth, the scales items were entirely

dichotomous and hence vulnerable to producing artifactual factor analytic solutions (Hoijtink & Wilmink, 1999).

Sensory Suggestibility Study

Purpose of the Present Study

The present study builds on the recent factor analysis of common "suggestion" measures by Tasso, et al (2003). Noting the posity of sensory suggestions used in that study, we examined whether a circumscribed aspect of suggestion, response to sensory suggestions, might reveal coherence with either unitary or multiple factor structure. We used sensory measures (tactile, auditory, visual and olfactory) to determine if "sensory suggestibility" is unitary or otherwise factorial.

Hypothesized Factor Structures

Based on previous factor analytic work on the construct of suggestibility, we tested three possible factorial models of sensory suggestibility: (1) Response to sensory suggestibility is a unitary construct (i.e., a one-factor structure that would include all the sensory measures included in the study), (2) Response to sensory suggestibility adheres to a two two-factor structure (corresponding to Gheorghiu & Reyher's (1982), initiation and intensification distinction) and/or (3) Response to sensory suggestibility is sensory channel dependant (i.e., a four-factor structure where each factor corresponds to one of the four sensory channels sampled – auditory,

visual, tactile, olfactory). An outline of the hypothesized models is presented in Table A-2.

CHAPTER 2

METHODOLOGY

Research Design

The present study consisted of two parts. The first part of the study involved the subject's participation in attending an in-class hypnosis presentation (Part I) in which the Harvard Group Hypnotic Susceptibility Scale (HGHSS), Form A (Shore & Orne, 1962) was administered and the subject's hypnotic ability was assessed. The subsequent part of the study (Part II) involved the administration of eight indirect/secondary (see Table A-3) sensory suggestibility measures in the laboratory.

Participants

We tested 145 undergraduate psychology students (f = 91/m = 54) between the ages of 18 - 40 (mean 19.03) with a standard deviation of 2.38. Participants were selected on the basis of their previous participation in attending an in-class hypnosis presentation (Part I) in which the subject's hypnotic ability was assessed. Recruitment for the subsequent part of the study (Part II), where the sensory suggestibility measures were administered, was encouraged by means of a sign-up sheet requesting voluntary participation. Volunteers received 1 hour extra credit as compensation.

Procedures

Data-collection for the laboratory portion of this study (Part II) took place in the Psychology Department of the University of Tennessee in a well-lit, temperature-controlled, sound-proof room. Participants were individually scheduled into half hour slots in the laboratory and were informed that the experiment was a study of "sensory sensitivity" that aimed at exploring sensory thresholds using several auditory, olfactory, tactile and visual tests, so as to eliminate bias. At the beginning of each session, subjects were required to sign and informed consent. To preserve the integrity of the suggestibility measures, the two parts of the study (Part I and Part II) were advertised as being unrelated. To ensure that students believed this, the administration of the hypnotic group scale took place on a separate day than laboratory participation and the experimenters responsible for administering the HGHSS were never seen by the subjects during the second part of the experiment. Furthermore, the experimenters in Part II remained blind to the subject's hypnotic ability. Also, the revelation of the true nature of the experiment was withheld from the participants. Instead, at the end of each session, subjects were provided with the contact information (name, e-mail address, telephone number and office location) of the supervising faculty member which could be contacted for debriefing at the end of the semester. All of the experimenters involved in the study were thoroughly trained on the administration of protocols and the procedures of the experiment.

In the laboratory, presentation of the sensory suggestibility tests was randomized across subjects. Each subject was provided with a set of instructions before the administration of the sensory measures. Subjects were informed that they

would be presented with a series of sensory measures (tactile, olfactory, visual and auditory) where they would be asked to report back to the experimenter as soon as they could sense (smell, see, hear, or feel) the relevant stimulus. More specifically, for each of the initiation type measures the subjects were told that they would be presented with a stimulus (i.e., the ticking of a watch, heat form the experimenters hand, etc.) and that they should alert the experimenter as soon as they could sense the suggested stimulus (i.e., in the black disk test, subjects were instructed to tell the experimenter as soon as they saw the suggested green dot in the middle of the disk). For each of the intensification type measures, the subjects were told that they would be presented with a stimulus (i.e., listening to a tone, detecting a "lemony" odor, observing a light bulb) that supposedly increased as a result of the experimenter's manipulation (i.e., turning of a knob, pouring water through a funnel, etc.) and were instructed to alert the experimenter as soon as this increase of the stimulus became apparent. Thus, a measure of suggestibility was attained from the subject's determination of sensing the suggested stimulus. After the subject had been subjected to all of the sensory measures in a laboratory session, they were asked to sit in a table outside of the laboratory (the experimenter was not present) to complete a brief questionnaire. The questionnaire inquired about their willingness to fulfill the experimenter's expectations, in order to address issues of experimenter compliance.

Sensory Suggestibility Measures

Eight measures of sensory suggestibility were administered in the present study. Detailed description of the measures used for testing the hypothesized models

can be found in Table A-3. Also, the type of measure, the sensory channel evoked, the test administration procedures, and the means by which a measure of the subject's suggestiveness was attained are summarized. The eight measures used were: the Hand test, the Glass test, the Watch test, the Tone test, the Black Disk test, the Light test, the Odor test, and the Lemon test. All of the measures administered were indirect/secondary in nature, as previously described by Eysenck & Furneaux, (1945). These measures were divided into two categories: initiation (1) where a stimulus that doesn't actually exist is suggested to the subject; and intensification (2) where an actual stimulus is presented and the appearance of gradation occurs but without the increase or decrease of the implied stimulus (Gheorghiu, V.A. et. als, 2001).

Procedures for the Administration of the Tactile Measures

The Hand Test. (Initiation Type) It is suggested that the subject will experience sensation of heat (Gheorghiu, V.A. et. als, 2001). The procedure requires the subject to sit with his arm extended (from the elbow to the hand - palm facing downward) on the arm rest of a chair. For each trial, the experimenter places his hand inside a heating pad (12" x 14") for about 15s. The pad is turned on at the lowest setting, but the subject is not aware of this, instead they are informed that the heating pad is "very hot". The experimenter then lowers his hand slowly towards the subjects' arm, while following a ruler on the wall. The movements of the hand start at 15cm from the skin and never get closer than 5cm – a distance at which, under normal conditions, no perception of warmth is possible (Gheorghiu et al, 2001). Subjects are instructed to inform to the experimenter when the sensation of warmth is

perceived on the skin. No actual stimulus is presented. The duration of the test is 10s which is monitored by a stop watch.

The Glass Test. (Intensification Type) It is suggested that a change in weight in the contents of a glass should be perceived (Gheorghiu, V.A. et. als, 2001). The procedure requires the subject to stand in front of a black box (17"x 15"x 46") that has two openings, one facing the subject and another that allows water to flow through a funnel (placed on top of the box) into a concealed cup inside the box. The experimenter stands opposite to the subject (with the box between them). The subject is then asked to put his hand through the opening in the box (8m/cm) and a transparent glass (11oz – acrylic) filled with 1/3 cup of water is shown and then given to the subject to hold. The experimenter then uses a measuring cup to slowly pour water through the funnel, which deposits into another cup (kept secret from the subject), which is part of the apparatus. Subjects are instructed to report to the experimenter the moment in which they detect an increase in weight. An actual stimulus is presented but, there is no actual change in the weight or contents of the glass held by the subject. The duration of the test is 10s which is monitored by a stop watch.

Procedures for the Administration of the Visual Measures

Black Disk Test. (Initiation Type) A cardboard disk is brought near the subjects' eye and the presence of a green dot that is located in the center of the disk is suggested (Hajek & Spacek, 1987; Gheorghiu, Hodapp & Ludwing, 1975; Gheorghiu, Grimm & Hodapp, 1978). The procedure requires the subject to sit

across from the experimenter. The subject is then asked to cover one eye (typically the left eye), while the experimenter holds the solid black cardboard disk (6.5 m/cm) at a distance of approximately 15cm from the subjects face. The disk is then slowly moved closer to the subject's eye following a ruler on the wall (getting no closer than 5cm). Subjects are instructed to report to the experimenter when the green dot in the center of the disk is perceived. No actual stimulus is presented. The duration of the test is 10s which is monitored by a stop watch.

Light Intensity Test. (Intensification Type) It is suggested that the light intensity of a light bulb will increase (Hajek & Spacek, 1987; Gheorghiu, Hodapp & Ludwing, 1975; Gheorghiu, Grimm & Hodapp, 1978). A white light bulb (25w, GE, 3 1/8" wide, medium base, model 60G25) is attached to a black electrical box (9"x6.5"x2.75"). The box has an "on" switch (conmutator-basculant switch) and a knob with numbers ranging from 1-10 presumably, for manipulation of light intensity. The subject is asked to wear sunglasses and to sit (at a distance of approximately 3') facing a table in which the device has been placed. The experimenter proceeds to turn off the light of the laboratory and turn on the light on the device and informs the subject that the device has been specially designed to increase in brightness by the manipulation of the knob. The experimenter then, turns the knob slowly (clockwise) while subjects are instructed to report as when they can detect an increase in brightness. An actual stimulus is presented but, there is no actual change of intensity. The duration of the test is 15s which is monitored by a stop watch.

Procedures for the Administration of the Olfactory Measures

Odor Test. (Initiation Type) Subjects are presented with 6 dark colored bottles labeled with different smells. The bottles are set up in the following order on a table: (1) Rose, (2) Tangerine, (3) Peppermint, (4) Jasmine, (5) Grapefruit, and (6) Vanilla. Bottles #1, #2 and #3 containing actual scented oils in accord with the label, while bottles #4, #5 and #6 containing only water. Scent is suggested to exist in all 6 bottles (Abraham, H. 1962). The subject is seated in front of the table facing the bottles (labels exposed). The experimenter then, removes the top of each bottle (one at a time) and moves them slowly towards the subjects' nose (movements starting upward from the tip of the chin). The subject is not allowed to touch the bottles. The experimenter wears latex unscented gloves to prevent the subject from detecting smells related to soap, lotion or perfume from the experimenter's hand. Subjects are instructed to report as soon as they detect a smell of any kind in each bottle. No actual stimulus is presented in the last three bottles. The duration of the test is 30s (approx.5s per bottle) which is monitored by a stop watch.

The Lemon Test. (Intensification Type) 9 bottles containing lemon extract and yellow food coloring are presented to the subject, it is suggested that the smell of lemon gets stronger with each bottle (Council & Loge, 1988). This test was adjusted by the first author to fit the purposes of this experiment. Nine small glass corked bottles labeled 1-9 are placed on a table each containing the same amount of lemon extract. The food coloring in manipulated to suggest that the bottles differ in the amount of lemon that they contain (e.g. bottle #1 is pale yellow, bottle #2 gets darker, bottle #3 gets even darker, etc.). The subject is seated on a chair facing the bottles.

The experimenter then takes the top off each bottle and brings them up to the subject's nose one at a time. Subjects are asked to not touch the bottles and the experimenter wears latex unscented gloves to prevent the subject from detecting any scents related to soap, lotion or perfume from the experimenter's hands. Subjects are instructed to inform the experimenter of the first bottle in which they can first detect the lemon smell. Once the smell is detected by the subject, the experimenter proceeds to present bottle #9 and informs the subject that this bottle contains the most amount of lemon. The subject is asked to determine which of the bottles has the strongest smell (a comparison between the one that was first identified and bottle #9). The duration of the test is 10s (approx.5s per bottle) which is monitored by a stop watch.

Procedures for the Administration of the Auditory Measures

The Watch Test. (Initiation Type) Ticking of a mechanical stop watch is suggested to the subject ((Jones & Spanos, 1982; Gheorghiu, Hodapp & Ludwing, 1975; Gheorghiu, Grimm & Hodapp, 1978). The procedure requires the participant to be seated while the experimenter stands behind the chair. A mechanical stop watch is slowly moved towards the subjects' right ear. Movement begins at 15cm from the back of the subjects head and stop at 5cm from the subject's ear. The subject is instructed remain still during the process. The test is performed on one side of the body. Subjects are instructed to report as soon as they detect ticking. No actual stimulus is presented. The duration of the test is 10s which is monitored by a stop watch.

Tone Intensity Test. (Intensification Type) A recorded tone of constant intensity is presented to the subject through head-phones and a progressive increase in volume is suggested (Gheorghiu, Hodapp & Ludwing, 1975; Gheorghiu, Grimm & Hodapp, 1978). The procedure requires the subject sit in a chair next to the experimenter – who sits facing a computer which is set up on a table. The headphones are placed on the subjects head and removed when a change in tone is perceived or after 30s. The recorded tone of constant intensity (120ds, flat EQ, 780Kb) is played on the computer using standard audio software and is activated manually by the experimenter. Subjects are instructed to give a signal as soon as they detect a change in the volume of the tone. An actual stimulus is presented but, there is no actual intensification of the tone. The duration of the test is 30s which is monitored by a stop watch.

Scoring of the Sensory Suggestibility Measures

Excluding the Odor test all of the measures used in this study were scored dichotomously (0-Fail/1-Pass). The Odor test was scored continuously as follows: a score of 0 would be considered a "fail", while scores of 1, 2 or 3 were passing scores (reporting an odor in the first three bottles did not yield a score, points are given only if the participant reports a scent in any of the last three bottles). Level of confidence of the reported response was assessed after the presentation of each measure when the subject was asked to rate the clarity of the experienced stimulus on a 1 to 5 Likert type scale (1 = extremely clear, 5 = extremely unclear). Reaction times and distance was recorded (using a ruler) in all of the "initiation" type measures for the purpose of

distracting the subject from the true nature of the experiment. Also, as a conclusion to the study subjects were also asked to complete a brief questionnaire that inquired about their willingness to fulfill the experimenter's expectations during testing, in order to address issues of experimenter compliance.

CHAPTER 3

RESULTS

Preliminary Analysis

Data Management

All of the data used in the final analysis included the participants that completed both phases (part I and Part II) of the experiment. Nine participants failed to complete one of the testing phases of the study and therefore, their data was excluded from the analysis. Also, during the administration of the light test 21 participants reported seeing the light "flicker" (this was due to inconsistent flow of energy in the electrical outlets in the psychology building – the problem was corrected by connecting the measure to an electricity regulator) thus, their data on this particular measure was scored as a missing variable.

In order to test our hypotheses we conducted two separate structural analyses of our sensory suggestibility variables. The first analysis included all the variables in their dichotomous form (i.e., the scores of the odor test which was not dichotomously scored, was converted into dichotomous form by using the subject's reaction time). To avoid artifactual findings, the second analysis included all the variables in continuous form. This was accomplished by collapsing all of the dichotomous scores for each of the measures with the subject's response on the certainty scale. Table A-4 and Table A-5 display the distributions of each item for the dichotomous and continuous variables. Due to the skewness of the distribution in the odor test and the

tone test, we modified the scores using reaction times and other response criteria in order to normalize the distribution curve.

Correlations

The preliminary analysis of our data revealed some significant correlations among the sensory suggestibility variables. There were no significant correlation between our variables and hypnotic susceptibility. Table A-6 shows the correlation matrix for the dichotomous variables. Results reveal low intercorrelations between our variables (i.e., ten significant correlations out of sixty-four possibilities). Although there were few statistically significant relationships at the .01, none of these relationships exceeded the strongest correlation of .294 between the hand test and the black disk test. The weakest relationship found was between the light test and the odor test, with a Pearson correlation of .003.

Similar results were observed in the preliminary analysis of the variables in their continuous form. Table A-7 shows the correlation matrix for the continuous scores of our sensory suggestibility measures. Once again, results of the matrix revealed low intercorrelations between variables (eight correlations out of sixty-four possibilities). The strongest relationship in this case was between the Hand test and the Black Disk test with a Pearson correlation of .325 and the weakest relationship being between Odor test and the Black Disk test with a Pearson correlation of .164.

Structural Analysis

We applied factor analytic analysis by using two separate statistical strategies: exploratory factor analysis and confirmatory factor analysis. Because factor analysis is a method of data reduction that seeks for underlying unobservable latent variables that are reflected in the manifest variables, we decided that as a first step to understanding our data it would be useful to test our hypotheses by subjecting our data to an exploratory method.

Exploratory Structural Analysis

Exploratory Factor Analysis, unlike confirmatory methods, groups variables into factors without imposing any of the previously hypothesized models. There are many different types of rotations that can be used when performing exploratory factor analysis. In this case, we used a Varimax Rotation Method which "tries" to fit the variables into different factors. In other words, a Varimax Rotation is a form of orthogonal rotation that forces items to correlate or load with one and only one factor by imposing the restriction that the factors cannot be correlated. It is typically used with principal components analysis (Tabachnik & Fidell, 2001). We further conducted an exploratory analysis allowing for an Oblique Rotation Method. This technique allows for a more "lax" loading of factors, meaning that the model will not "try" to fit the variables in different factors by allowing them to correlate. For this purpose we used SPSS suite, version 13.

None of the three "a priori" hypothesized models emerged in our initial exploratory analysis of the dichotomous variables using a Varimax rotation. Instead,

a three factor structure emerged. The Lemon test, the Odor test, the Black Disk test, and the Hand test loaded on factor 1, accounting for 20.61% of the variance; the Lemon test, Light test, Tone test, and the Glass test loaded on factor 2, accounting for 19.15% of the variance; and the Light test, the Glass test, the Odor test and the Watch test loaded on the third factor, accounting for 13.98 % of the variance. Exploratory analysis of our variables using an Oblique Rotation Method, also failed to support any of our there hypothesized models. Our sample met minimum requirements on the Kaiser-Meyer-Olkin measure of sampling adequacy (KMO) with a .694 and passed the Bartlett's Test of Sphericity with a Chi-Sq of 78.701 and degrees of freedom of 28. Detailed results of this analysis can be found in Tables A-8 through A-11. Table A-8 shows the communalities among the variables, Table A-9 explains the total variance among the emerging factors, Table A-10 provides the component matrix of the exploratory factor analysis or the "initial solution" for the model and Table A-11 depicts the rotated component matrix for the emerging three-factor model. Correlations under .30 were excluded from the data output in order to simplify reading (i.e., low correlations that are probably not meaningful).

In the analysis of the continuous variables once again, all of our hypothesized structures (see Table A-2) failed to be supported. Instead, a three factor structure emerged. The Lemon test, Glass test, the Odor test, the Black Disk test, and the Hand test loaded on factor 1, accounting for 21.60% of the variance; the Light test and the Tone test loaded on the second factor, accounting for 16.34% of the variance; and the Odor test, the Watch test and the Hand test loaded on the third factor, accounting for 13.65% of the variance. As it did in the analysis of the dichotomous variables, the

application of an Oblique Rotation Method did not yield any support for our hypotheses in this case. Our sample met minimum requirements on the Kaiser-Meyer-Olkin Measure of Sampling Adequacy (KMO) with a .680 and passed the Bartlett's Test of Sphericity with a Chi-Sq of 64.966 and degrees of freedom of 28. Detailed results of the analysis can be found in Tables A-12 through A-15. Once gain, correlations under .30 were excluded from the data output in order to simplify reading. Table A-12 shows the communalities among the variables, Table A-13 explains the total variance for the emerging factors, Table A-14 provides the component matrix of the exploratory factor analysis or the initial solution for the factorial model and Table A-15 depicts the rotated component matrix for the emerging three-factor structure.

After performing the exploratory analysis with both sets of variables (dichotomous and continuous) we noticed that a possible explanation for the emerging three-factor structure, according to each factor loading, could be a result of the level of difficulty of the measures administered. In other words, it was suspected that the variables could be loading on each factor according to the "pass / fail" percentages (i.e., in general, the intensification tests had a higher passing percentage than the initiation tests). To control for such confound, we adjusted the variables by normalizing the curve using cutoffs based on reaction times or other relevant scoring factors. After making the appropriate adjustments, we proceeded to analyze our data by administering exploratory factor analysis for the adjusted variables. Table A-16 depicts the passing percentages for each of the original measures and Table A-17 presents the passing percentages after the adjustment of the variables was performed .

It was concluded by our analysis that adjusting the variables did not make a significant difference in the interpretation of our data as it related to our previously hypothesized models (see Table A-2) when using both, the Varimax Rotation Method and the Oblique Rotation Method. Thus, ruling out level of difficulty as a confounding variable. Yet it must be noted that this time, although a three-factor structure model emerged, the factors were not as clearly delineated as in our previous scoring conditions (dichotomous and continuous). In fact, when we conducted our analysis applying an Oblique Rotation Method a solution was initially unachievable by the parameters of rotation in 25 (or below) iterations (yielding a solution with a rotation converged in 36 iterations). In sum, analysis of the adjusted variables did not reveal a clearly delineated factor structure suggesting that our sensory measures do not "hang" together in a coherent model.

Confirmatory Structural Analysis

The second strategy applied was a confirmatory factor analytic method which allowed us to directly test the hypothesized models by imposing factor parameters. For this purpose we used software of Analysis of Movement Structures (AMOS), version 4.01 (Arbuckle, 1999). Due to the dearth of correlations between hypnotic susceptibility and the sensory suggestibility measures, we excluded hypnosis from our factor analyses discarding the possibility of any substantial relationship with this hypothesized type of suggestibility (i.e sensory suggestibility).

Confirmatory factor analysis is a method of data reduction that seeks for underlying unobservable latent variables that are reflected in the manifest variables.

This statistical method of data analysis allows us to test our three hypothesized models (see Table A-2) more directly by imposing structural limits. More clearly, it allows us to choose a variable or measure that we believe best describes the factor for which we are seeking variable loadings and the software then tries to force variables into the determined factor using correlations. This technique provides us with factor loading weights for each one of the variables, as well as the best fitting model for the hypothesized structure. It must be noted that although such an analysis can generate a so-called "best-fit" for each model, it does not reveal directly the latent qualities that are related to the variables loading on a particular factor.

In spite of the lacking support for our hypothesized models in the exploratory analysis, we conducted confirmatory factor analysis in order to further test our hypotheses. Two of hypothesized models were tested individually for all of our scoring conditions (dichotomous, continuous and adjusted). First, we conducted an analysis to test the possibility of a one-factor structure or "g" factor of sensory suggestibility. Second, we conducted analysis to test a two-factor model which would support two existing types of sensory suggestibility: "initiation" and "intensification". Although according to the preliminary findings of our exploratory factor analysis it is unlikely that a confirmatory procedure would reveal a four factor structure, our third hypothesized model where we expected the variables to load into four factors according to their sensory channel (auditory, olfactory, visual and tactile), could not be tested due to the limitations of the statistical software used for the analysis (Amos). Amos requires that at least three measures or variables are included under any imposed factor for analysis to be possible. This is because of the

nature of structural analysis, which demands keeping one of the variables "wedded" or constant to each particular factor. Therefore, in order to perform an analysis of this four-factor structure we would have needed to include an additional measure for each sensory channel in our design. This particular study did not meet such requirements and for this reason, we are limited in stating any conclusions regarding the possibility of a four-factor structure beyond the results yielded by our preliminary exploratory findings. For the purpose of testing the remaining hypothesized models (i.e., one-factor model and two-factor model) the olfactory tests were selected to remain constant or "wedded" to the each factor in our analysis. This was determination was based on previous theory and research in the suggestion and suggestibility literature.

The confirmatory factor analysis of our one-factor structure or "g" factor of sensory suggestibility using dichotomous variables yielded acceptable results with a Chi Sq value of overall model fit of 18.407, df of 20 and a probability level of .561. Tests of relative fit also revealed acceptable results. The Tucker-Lewis Index which compares the absolute fit of the specified model to the absolute fit of the independence model had a value of 1.003 (values higher than .95 are considered acceptable), while the Root Mean Square of Approximation yielded a value of 0.00 (values lower than .06 are considered for a best-fitting model of sensory suggestibility). Yet, although the probability levels in this model seem to confirm a "goodness-of-fit", a closer look reveals that Watch Test fails to achieve statistical significance with a probability level of .385. Such a finding forces us to reject the one-factor model for the dichotomous variables. The model presented in Figure B-1

is the "best-fitting" model for our one-factor hypothesis using dichotomous variables. Table A-18 depicts the regression weights of this factorial model, ranging from .098 (Watch Test) to .533 (Lemon Test). Table A-19 shows the significance levels for the regression weights of the one-factor dichotomous model, except for the Odor Test which remained constant for this particular model.

We then, proceeded to test the same one-factor model with the continuous variables. The "best fitting" model in this case yielded a Chi Sq of 16.377 and df of 20 with a probability level of .693. Tests of relative fit also yielded acceptable results. The Tucker-Lewis Index had a value of 1.005, while the Root Mean Square of Approximation yielded a value of 0.00. Regression weights of this model ranged from .092 (Watch Test) to .519 (Black Disk Test). Although this particular one-factor model has an adequate goodness-of-fit, when we took a closer look at the regression weights we found that they reached significance only at the 0.05 level, ranging from .420 (watch test) to .015 (black disk test), and that the watch test (as it did in the analysis of the dichotomous variables) did not reach significance with a probability value of .420. Therefore, once again, we were forced to reject a one-factor model of sensory suggestibility.

Further, while the exploratory analysis of the variables did not suggest that the variables could be loading based on their level of difficulty, we decided to run an analysis with the previously adjusted variable for the sake of diligence. Results of this analysis revealed a "best fitting" model that had a Chi Sq of 25.491 and df of 20, with a probability level of .183. Tests of relative fit did not yield results as acceptable as the two previous analyses. The Tucker-Lewis Index resulted in a value of 0.988

which barely meets acceptable criteria, while the Root Mean Square of Approximation yielded a value of 0.044. Regression weights of this model ranged from -.494 (Tone Test) to .592 (Black Disk Test). In this case, when taking a closer look at the regression weights for each of our variables we found that several of our measures failed to achieve acceptable probability values (i.e., Lemon test, p = .059; the Light test, p = .064; the Watch test, p = .064), forcing us to reject the one-factor model once again.

Finding no support for a one factor structure, we moved on to test our hypothesized two-factor model of sensory suggestibility with the dichotomous variables. The "best fitting" model for this analysis yielded a Chi Sq of 29.731 and df of 20, with a probability level of .074. Tests of relative fit barely met acceptable criteria with the Tucker-Lewis Index yielding a value of .984 and the Root Mean Square of Approximation a value of 0.058. Overall, the probability level of the model did not suggest that this was a "good fit" and when taking a closer look at the regression weights for each of our variables we can see that several of our measures failed to achieve acceptable significance levels (i.e., the Watch test, p = .720 and the Hand test, p = .053). These results do not support a two-factor structure (i.e., initiation type and intensification type) of sensory suggestibility for the dichotomous variables. Figure B-2 displays the best fitting model for this analysis. Table A-20 depicts the regression weights of this model, ranging from .043 (Watch Test) to .576 (Hand Test). Table A-21 depicts the significance levels for the regression weights of the two-factor model, except for the Odor Tests, which remained as the constant variables for this particular model.

Next, we proceeded to test our hypothesized two-factor model with the continuous and adjusted variables. The best fitting model for the analysis of our continuous variables yielded a Chi Sq of 27.601 and df of 20, with probability level of .119. Tests of relative fit once again, barely met acceptable results with the Tucker-Lewis Index yielding a value of .989 and the Root Mean Square of Approximation yielding a value of 0.051. The probability level of the overall model did not suggest that this was a very 'good fit" (p = .119) and when we take a closer look at the regression weights for each of our variables, we can see that the Hand test (p = .074), the Watch Test (p = .383) and the Black Disk test (p = .180) failed to achieve acceptable significance levels. Regression weights for this model, ranged from .108 (Watch Test) to .699 (Black Disk Test). These findings forced us to reject a two-factor structure of sensory suggestibility for the continuous variables.

The same conclusion was reached in our analysis of the adjusted variables for this two-factor model. The "best fitting" model, which was not "fitting" at all with a Chi Sq of 43.224 (df =20) and a probability level of .002, did not support our hypothesis of the two sensory suggestibility types (i.e., initiation and intensification). Furthermore, tests of relative fit did not yield acceptable results. The Tucker-Lewis Index revealed a borderline value of 0.951 (values higher than .95 are considered acceptable) while the Root Mean Square of Approximation yielded a value of 0.090. Regression weights for this model, ranged from -.405 (Glass Test) to .698 (Tone Test). While the probability level of the model did not suggest that this was a good fitting model with a value of .002, we confirmed this by taking a closer at the probability levels for each of the variables. In this case, all of the administered

measures failed to achieve statistical significance providing no support for a two-factor structure sensory suggestibility structure.

Reliability Analysis

Considering our results of the structural analyses in this study, it was implausible that a reliability analysis would have yielded any support for an omnibus sensory suggestibility scale composed by our measures. Yet, we proceeded to perform such an analysis for all of our scoring condition in order to further support our findings. As suspected, the reliability analysis of our data for all of the scoring conditions (dichotomous, continuous and adjusted) did not reveal a reliable omnibus sensory suggestibility scale. Results for our reliability analysis of the dichotomous variables with a total of eight items, yielded a Chronbach's Alpha of .567, increased only to .599 by the deletion of the Watch test. Such results do not support a highly reliable scale. Results for our reliability analysis of the continuous variables with a total of eight items, yielded a Chronbach's Alpha of .538, increased only to .576 by the deletion of the Watch test once again, failing to support the notion of a reliable scale. Results for our reliability analysis of the adjusted variables with a total of eight items, yielded a Chronbach's Alpha of .308, increased only to .520 by the deletion of the Glass test. As in both of our previous analyses, such results did not support a reliable sensory suggestibility scale. Table A-22 depicts the reliability and item-total statistics for our analysis of the dichotomous variables, Table A-23 shows the reliability and item-total statistics for our analysis of the continuous variables and

Table A-24 depicts the reliability and item-total statistics for our analysis of the adjusted variables.

Miscellaneous Analysis

Because the literature has used the construct of suggestion and suggestibility so loosely, there are several theorists that believe that a response by a person to any given suggestion can be related to the effects of compliance in relation to a figure of authority (i.e., MacDougall, 1908), expectation (i.e. Gheorgiu & Reyher, 1982; Kircsh, 1999, etc.). Also, questions have been raised regarding the effects of the subject's knowledge or awareness of being submitted to measures of suggestibility in the laboratory (i.e., not concealing the true nature of a suggestibility nature). In order to briefly address such possible confounds in our data, we administered a seemingly anonymous questionnaire to each one of the subjects tested at the conclusion of the laboratory session that included three relevant questions. This questionnaire was presented to the subjects as a task that pertained to a different study to which the experimenter had no access. This was done to provide the subjects with a sense of privacy that we thought would allow for greater reliability in their responses.

The first question intended to inquire about the subject's knowledge of the true nature of the measures administered (i.e., what did you think the study was about?). Descriptive statistics indicated that 35.4% (n=105) of the participants thought the study was about sensory sensitivity or sensory threshold detection in accord with how the study had been advertised, 2% of the participants thought the study was related to suggestibility or hypnosis, and 63.8% of the participants

answered "I don't know". The second question asked subjects about the subject's tendency to comply with the experimenter during the administration of the measures (i.e., did you respond to any of the measures in order to fulfill the experimenter's expectations?). On this question, descriptive data revealed that 40.6% reported sensing or not sensing a stimulus as a result of their desire to please the experimenter, while 59.4% did not. The third and final question probed for familiarity with the administered measures (i..e., have you ever heard of any of the tests that you took today?). In this case, 16.2% (n=105) reported having previous knowledge of one of the measure administered (the measures reported varied across subjects).

Although it is unlikely that any of these factors could change the results obtained through the extensive analysis of our data, or that they would have a major impact on the structural implications of the exploratory and confirmatory factor analyses; we are unable to confirm such assumptions in this paper. To address concerns regarding these possible confounds, it would be necessary to conduct analysis of variance to investigate if these social variables could have had a significant impact on the responses to the tests administered in this study. Our data was not subjected to this type of analysis.

CHAPTER 4

DISCUSSION

Conclusions and Discussion

The focus of research on "suggestion" and "suggestibility" has for a long time, aimed at exploring the boundaries and underlying factors of the construct. Over the years, scientists have for the most part, failed to clarify what lies within and outside the construct of suggestion. While some studies seem to support the existence of different types of suggestion, others do not. Therefore, it is timely to take a fresh empirical look at this construct using contemporary statistical methodology in order to address the subject of suggestion and suggestibility comprehensively. Building on a study that did precisely this (Tasso, et al., 2003), the present study narrowed its scope by investigating the construct of sensory suggestibility as a distinct type of suggestion in order to address once again, the empirical question concerning the structure or coherence of the construct.

We tested three hypothesized structural models. Our first hypothesized model consisted of a one-factor structure or "g" factor of sensory suggestibility. We found no support for a unitary trait or "g" factor of sensory suggestibility. Besides negating the notion of sensory suggestibility as a single construct, we found no support for it having a clearly delineated factor structure. In fact, it is more likely that the way in which a person responds to a given sensory measure (i.e., odor test) is not predictive of how a person will respond to any other sensory measure (i.e., tone test).

Gheorghiu & Reyher (1982) not withstanding, sensory suggestibility does not hang together.

Our second hypothesized model involved the emergence of two types of sensory suggestions, initiation type and intensification type. If sensory suggestibility is not a unitary construct, may be it is a cluster of related constructs. Our results also failed to support this hypothesis. The assumption that the way in which a suggested stimulus is presented to the subject (i.e., a tone of constant intensity with suggestions of it getting louder versus hearing the "ticking' of a non-working watch) will have an effect on how susceptible a person is to sensory suggestions does not appear to have any bearing. Further, we can conclude that the way in which a subject responds to a suggestion of a "so-called" initiation or intensification type, does not predict the way in which the subject will respond to another test of the same type. Actually, even though the intensification measures in this study seemed to have a greater "passing" percentage (i.e., more subjects were able to sense the suggested stimulus), this did not make a difference in our statistical findings. It is possible that although subjects might find it easier to detect change in a stimulus that is present rather than sense a stimulus that is not present, the overall preamble (i.e., the general instructions that the subject is given at the beginning of the experiment) have a greater effect that the subtleties of each individual measure.

The third and final hypothesis tested in this study involved a four-factor model of sensory suggestibility which would be contingent on sensory channel (i.e., olfactory, tactile, visual and auditory). While our design did not allow for the direct testing of this hypothesis using confirmatory factor analysis, results in our

exploratory factor analysis did not support this notion. The way in which a person responds to a sensory measure addressed to a specific sensory channel (i.e. smell), is not related to the way in which a person responds to any other measure designed to elicit perceptions from the same sensory venue (i.e., olfactory measures). This supports the idea that the subtleties of each individual measure might be of less importance when attempting to understand the constructs of "suggestion" and "suggestibility".

In conclusion, based on our findings, there is no empirical evidence to support the notion of a "g" factor of sensory suggestibility. Also, there is no evidence to support that sensory suggestibility can be categorized into sensory suggestions of an initiation type or into sensory suggestions of an initiation type. Therefore, caution should be used when evoking the construct of sensory suggestibility as a distinct type of "suggestion". Further, labeling the reduction of the construct into categories based on the mechanisms of the measures utilized should be done only when it is specified that such labels do not necessarily account for different aspects of suggestibility. These conclusions concerning sensory suggestibility are fully congruent with those of Tasso, et al. (2003) who found no discernable factor structure among general suggestibility measures.

Limitations of the Present Study and Future Directions

There are limitations to this study. Replication of these findings using factor analytic methodologies should be attempted with a larger set of variables and should include alternative methods of presentation in addition to the ones used in this

experiment (i.e., generalization, illusory cause and effect, etc.). Further, because this experiment took place in a university campus where the populations are homogenous, it would be important to test these hypotheses using a more generalizable sample. Also, modifications in design should involve the collection of test – re-test data to explore the consistency of response for each subject across time.

The construct of suggestibility has been tested and found wanting. For this reason, it is important to broaden the aims of the research scope in this area by exploring the more subtle qualities of the construct. It is possible that by focusing on other components such as how the suggestion is communicated and in what context we find meaningful groupings of ability within the broader province of general suggestibility or responsiveness, we could acquire greater knowledge on what lies within and outside its domain.

LIST OF REFERENCES

Abraham, H. L. (1962). The suggestible personality: A psychological investigation of susceptibility to persuasion. *Acta Psychologica – Amsterdam, 20*(2), 167-184.

Allport, G. (1937). *Personality*. New York: Holt.

Arbuckle, J. L., & Wothke, W. (1999). *Amos 4.0 user's guide*. Chicago: SPSS/Small Waters.

Asch, S. E. (1951). Effects of group pressure upon the modification and distortion of judgments. In H. Guetzkow (Ed.), *Groups, leadership, and men: Research in human relations* (pp. 177-190). Oxford, England: Carnegie Press.

Asch, S. E. (1955). Opinions and social pressure. *Scientific American, 193*, 31-35.

Aveling, F., & Hargreaves, H. L. (1921). Suggestibility with and without prestige in children. *British Journal of Psychology, 12*, 53-75.

Baker, S. L., & Kirsch, I. (1993). Hypnotic and placebo analgesia: Order effects and the placebo label. *Contemporary Hypnosis, 10*, 117-126.

Balthazard, C. G., & Woody, E. Z. (1985). The "stuff" of hypnotic performance: A review of psychometric approaches. *Psychological Bulletin, 98*(2), 283-296.

Barber, T. X. (1959). Towards a theory of pain: Relief of chronic pain by prefrontal leucotomy, placebos, and hypnosis. *Psychological Bulletin, 56*, 430-460.

Barber, T. X. (1969). *Hypnosis: A scientific approach*. New York: Nostrand.

Bearden, W. O., Netemeyer, R. G., & Teel, J. E. (1989). Measurement of consumer susceptibility to interpersonal influence. *Journal of Consumer Research, 15*, 473-481.

Beaumont, M. (1987). Confessions, cautions, experts and the sub-normal after R vs Silcott and others. *New Law Journal, 28*, 807-814.

Benton, A. L., & Bandura, A. (1953). "Primary" and "secondary" suggestibility. *The Journal of Abnormal and Social Psychology, 48*, 336-340.

Bernheim, H. (1886). *Suggestive therapies: A treatise on the nature and uses of hypnotism.* New York: G. P. Putman's Sons.

Bernheim, H. (1889). Automatisme et suggestion. *Congress for Physiological Psychology*, Paris, 163.

Binet, A. (1900). *La suggestibilite'*. Paris: Schleicher.

Bird, C. (1940). *Social psychology*. New York: Appleton Century.

Bowers, K. S. (1983). *Hypnosis for the seriously curious*. New York: Norton.

Braffman, W., & Kirsch, I. (1999). Imaginative suggestibility and hypnotizability: An empirical analysis. *Journal of Personality and Social Psychology, 77*(3), 578-587.

Brown, W. (1916). Individual and sex differences in suggestibility. *University of California Publications in Psychology, 2*(6), 291-430.

Burtt, H. E. (1931). *Legal psychology*. New York: Prentice-Hall.

Cautela, J., & McLaughlin, D. (1965). The influence of suggestion on the audioatokinetic effect. *Journal of Psychology, 60*, 117-122.

Ceci, S. J., & Bruck, M. (1993). Suggestibility of the child witness: A historical review and synthesis. *Psychological Bulletin, 113*(2), 403-439.

Council, J. R., & Loge, D. (1988). Suggestibility and confidence in false perceptions: A pilot study. *British Journal of Experimental and Clinical Hypnosis, 5*(2), 95-98.

Critelli, J. W., & Neuman, K. F. (1984). The placebo: Conceptual analysis of a concept in transition. *American Psychologist, 39*, 32-39.

Charcot, J. M. (1882). Different nervous states as they appear when hysterics are hypnotized. *Biweekly Accounts of the Meetings of the Academy of Sciences, 94*, 403-405.

Crowne, D. P., & Marlowe, D. (1960). A new scale of social desirability independent of psychopathology. *Journal of Consulting Psychology, 24*(4), 349-354.

De Pascalis, V. (1989). Hypnotic susceptibility, alpha waves and 40-Hz EEG rhythm, and personality. In V. A. Gheorghiu, P. Netter, H. J. Eysenck, & R. Rosenthal (Eds.), *Suggestion and suggestibility: Theory and research* (pp. 221-239). Berlin: Springer-Verlag.

De Pascalis, V., Ray, W. J., Tranquillo, I., & D'Amico, D. (1998). EEG activity and heart rate during recall of emotional events in hypnosis: Relationships with hypnotizability and suggestibility. *International Journal of Psychophysiology, 29*, 255-275.

Duke, J. D. (1961). *A study of the relationships between primary suggestibility, secondary suggestibility and placebo reactivity*. Unpublished doctoral dissertation, University of North Carolina.

Duke, J. D. (1964). Intercorrelational status of suggestibility tests and hypnotizability. *Psychological Record, 14*, 71-80.

Duke, J. D. (1964). Placebo reactivity and tests of suggestibility. *Journal of Personality, 32*(2), 227-235.

Edmonston, W. E. (1989). Conceptual clarification of hypnosis and it's relationship to suggestibility. In V. A. Gheorghiu, P. Netter, H. J. Eysenck, & R. Rosenthal (Eds.), *Suggestion and suggestibility: Theory and research* (pp. 69-78). Berlin: Springer-Verlag.

Estabrooks, G. H. (1929). Experimental studies in suggestion. *Journal of Genetic Psychology, 36*, 120-139.

Evans, F. J. (1966). *The structure of hypnosis: A factor analytic investigation.* Unpublished doctoral dissertation, University of Sydney.

Evans, F. J. (1967). Suggestibility in the normal waking state. *Psychological Bulletin, 67*, 114-129.

Evans, F. J. (1989). The independence of suggestibility, placebo response, and hypnotizability. In V. A. Gheorghiu, P. Netter, H. J. Eysenck, & R. Rosenthal (Eds.), *Suggestion and suggestibility: Theory and research* (pp. 145-154). Berlin: Springer-Verlag.

Eysenck, H. J. (1943). Suggestibility and hysteria. *Journal of Neurology and Psychiatry, 6*, 22-31.

Eysenck, H. J. (1947). *Dimensions of personality*. London: Routledge & Kegan Paul.

Eysenck, H. J., & Furneaux, W. D. (1945). Primary and secondary suggestibility: An experimental and statistical study. *Journal of Experimental Psychology, 35*, 485-503.

Farthing, W. G., Brown, S. W., & Venturino, M. (1982). Effects of hypnotizability and mental imagery on signal detection sensitivity and response bias. *International Journal of Clinical and Experimental Hypnosis, 30*(36), 289-305.

Freud, S. (1910). The origin and development of psychoanalysis. *American Journal of Psychology, 21*, 181-218.

Gheoghiu, V. A., Polczyk, R., & Kappeller, C. (2003). The warmth suggestibility scale: A procedure for measuring the influence of suggestion on warm sensations. *Personality and Individual Differences, 34*(2), 219-231.

Gheorghiu, V. A., & Reyher, J. (1982). The effect of different types of influence on a "indirect-direct" form of a scale of sensory suggestibility. *American Journal of Clinical Hypnosis, 24*(3), 191-199.

Gheorghiu, V. A., Koch, E., Fialkovski, H., Peiper, W., & Molz. G. (2001). Factors influencing the illusion of warmth. *Contemporary Hypnosis, 18*, 21-31.

Grimm, L. G., & Yarnold, P. R. (1998). *Reading and understanding more multivariate statistics*. Washington, DC: American Psychological Association.

Grimes, F. V. (1948). An experimental analysis of the nature of suggestibility and of its relation to other psychological factors. *Studies in Psychology and Psychiatry at the Catholic University of America, 7*, 4.

Gudjonsson, G. H. (1984). A new scale of interrogative suggestibility. *Personality and Individual Differences, 5*(3), 303-314.

Gudjonsson, G. H. (1987a). A parallel form the Gudjonsson suggestibility scale. *The British Journal of Clinical Psychology, 26*, 215-221.

Gudjonsson, G. H. (1987b). Historical background to suggestibility: How interrogative suggestibility differs from other types of suggestibility. *Personality and Individual Differences, 8*(3), 347-355.

Gudjonsson, G. H. (1988). The relationship of intelligence and memory to interrogative suggestibility: The importance of range effects. *British Journal of Clinical Psychology, 27*, 185-187.

Gudjonsson, G. H. (1989). Compliance in an interrogative situation: A new scale. *Personality and Individual Differences, 10*(5), 535-540.

Gudjonsson, G. H. (1990). The relationship of intellectual skills to suggestibility, compliance, and acquiescence. *Personality and Individual Differences, 11*, 227-231.

Gudjonsson, G. H., & Clare, C.H. (1995). The relationship between confabulation and intellectual ability, memory, interrogative suggestibility, and acquiescence. *Personality and Individual Differences, 19*, 333-338.

Gudjonsson, G. H., & Clark, N. (1986). Suggestibility in police interrogation: A social psychological model. *Social Behavior, 1*, 83-104.

Gwynn, M. I., & Spanos, N. P. (1996). Hypnotic responsiveness, nonhypnotic suggestibility, and responsiveness to social influence. In R. G. Kunzendorf, N. P. Spanos, & B. Wallace (Eds.), *Hypnosis and imagination* (pp. 147-175). Amityville, NY: Baywood Publishing.

Hajek, P., & Spacek, J. (1987). Territory, hypnotic susceptibility and social influence: A pilot study. *British Journal of Experimental and Clinical Hypnosis, 4*(2), 115-117.

Hammer, A. G., Evans, F. J., & Bartlett, M. (1963). Factors in hypnosis and suggestion. *Journal of Abnormal and Social Psychology, 67*, 15-23.

Heap, C., & Nash, M. R. (2001). Changing beliefs about the past: Exploring mechanisms of the imagination inflation effect. *Journal of Experimental Psychology: Learning, Memory, and Cognition, 27*, 920-930.

Hilgard, E. R. (1973). The domain of hypnosis, with some comments on alternative paradigms. *American Psychologist, 28*, 972-982.

Hilgard, E. R. (1991). Suggestibility and suggestions as related to hypnosis. In J. Schumaker (Ed.), *Human suggestibility* (pp. 37-58). New York: Routledge.

Hoijtink, H., Rooks, G., & Wilmink, F. W. (1999). Confirmatory factor analysis of items with a dichotomous response format using the multidimensional Rasch model. *Psychological Methods, 4*(3), 300-314.

Holliday, R. E., Hayes, V. F., & Reyna, B. K. (2002). Memory processes underlying misinformation effects in child witnesses. *Developmental Review, 22*(1), 37-77.

Hull, C. L. (1929). Quantitative methods of investigating waking suggestion. *Journal of Abnormal and Social Psychology, 24*, 153-169.

Hull, C. L. (1933). *Hypnosis and suggestibility*. New York: Appleton-Century-Crofts.

Hull, C. L., & Forster, M. C. (1932). Habituation and perseverational characteristics of two forms of indirect suggestion. *Journal of Experimental Psychology, 15*, 700-715.

Hyman, I. E., Husband, T. H., & Billings, F. J. (1995). False memories of childhood experiences. *Applied Cognitive Psychology, 9*, 181-197.

James, W. (1902). *The varieties of religious experience*. New York: Longmans, Green, and Co.

Janet, P. (1925). *Psychological healing: A historical and clinical study*. (E. Paul & C. Paul, Trans.). New York: The Macmillan Co. (Original work published 1919).

Jones, B., & Spanos, N.P. (1982). Suggestions for altered auditory sensitivity, the negative subject effect and hypnotic susceptibility: A signal detection analysis. *Journal of Personality and Social Psychology, 43*(3), 637-647.

Kihlstrom, J. F. (1998). Exhumed memory. In S. J. Lynn, & K. M. McConkey (Eds.), *Truth in memory* (pp.3-31). New York: Guilford Press.

Kirsch, I. (1985). Response expectancy as a determinant of experience and behavior. *American Psychologist, 40*, 1189-1202.

Kirsch, I. (1997). Suggestibility or hypnosis: What do our scales really measure? *International Journal of Clinical and Experimental Hypnosis, 45*, 212-225.

Kirsch, I. (1999). Hypnosis and placebos: Response expectancy as a mediator of suggestion effects. *Anales de Psicologia, 15*(1), 99-110.

Kirsch, I., & Braffman, W. (2001). Imaginative suggestibility and hypnotizability. *Current Directions in Psychological Science, 10*(2), 57-61.

Kirsck, I., & Counsil, J. R. (1992). Situational and personality correlates of hypnotic responsiveness. In E. Fromm, & M. R. Nash (Eds.), *Contemporary hypnosis research* (pp. 267-291). New York: Guilford Press.

Kunzendorf, R. G., Spanos, N. P., & Wallace, B. (1996). Hypnotic responsiveness, nonhypnotic suggestibility, and responsiveness to social influence. *Hypnosis and Imagination* (pp. 147-175). Amityville, NY: Baywood.

Levine, J. D., Gordon, N. C., Jones, R. T., & Fields, H. L. (1978). The narcotic antagonist naloxone enhances clinical pain. *Nature, 272*, 826-827.

Lindberg, B. J. (1940). Suggestibility in different personality types. *American Journal of Psychology, 53*, 99-108.

Loftus, E. F. (1979). *Eyewitness testimony*. London: Harvard University Press.

Loftus, E. F. (1993). The reality of repressed memories. *American Psychologist, 48*, 518-537.

Loftus, E. F., & Pickrell, J. (1995). The formation of false memories. *Psychiatric Annals, 25*, 720-724.

Lundh, L. G. (2000). Suggestion, suggestibility, and the placebo effect. In V. D. Pascalis, V. A. Gheorghiu, P. W. Sheehan, & I. Kirsch (Eds.), *Suggestion and suggestibility: Theory and research* (pp. 71-90). Berlin: Springer-Verlag.

Lynn, S. J., Malinoski, P., Marmelstein, L., Stafford, J., & Green, J. P. (2000). Autobiographical memories, hypnotizability, and suggestion. In V. D. Pascalis, V. A. Gheorghiu, P. W. Sheehan, & I. Kirsch (Eds.), *Suggestion and suggestibility: Theory and research* (pp. 211-228). Berlin: Springer-Verlag.

MacDougall, W. (1908). *Introduction to social psychology*. London: Methuen.

Malinoski, P. T., & Lynn, S. J. (1999). The plasticity of early memory reports: Social pressure, hypnotizability, compliance, and interrogative suggestibility. *The International Journal of Clinical and Experimental Hypnosis, 47*, 320-345.

Maslow, A. H. (1939). Dominance, personality, and social behavior women. *Journal of Psychology, 10*, 3-39.

McConkey, K. M. (1992). The effects of hypnotic procedures on remembering: The experimental findings and their implications for forensic hypnosis. In E. Fromm, & M. R. Nash (Eds.), *Contemporary hypnosis research* (pp. 405-426). New York: Guilford Press.

McGlashan, T. H., Evans, F. J., & Orne, M. T. (1969). The nature of hypnotic analgesia and placebo response to experimental pain. *Psychosomatic Medicine, 31*, 227-246.

Milgram, S. (1963). Behavioral study of obedience. *Journal of Abnormal and Social Psychology, 67*, 371-378.

Milgram, S. (1965). Some conditions of obedience and disobedience to authority. *Human Relations, 18*, 57-76.

Milgram, S. (1974). *Obedience to authority*. New York: Harper.

Moore, R. K. (1964). Susceptibility to hypnosis and susceptibility to social influence. *Journal of Abnormal and Social Psychology, 68*, 282-294.

Moreno, M. I. C., Garcia, M. I. D., & Pareja, M. A.V. (1999). Cognitive factors in chronic pain. *Psychology in Spain, 3*(1), 75-87.

Nash, M. R. (1987). What, if anything, is regressed about hypnotic age regression? *Psychological Bulletin, 102*, 42-52.

Nash, M. R., Drake, S. D., Wiley, S., Khalsa, S., & Lynn, S. J. (1986). The accuracy of recall by hypnotically age regressed subjects. *Journal of Abnormal Psychology, 95*, 298-300.

Nash, M. R., & Fromm, E. (1992). *Contemporary hypnosis research.* New York: Guilford Press.

Orne, M. T. (1962). On the social psychology of the psychological experiment: With particular reference to demand characteristics and their implications. *American Psychologist, 17*, 776-783.

Otis, M. (1924). A study of suggestibility in children. *Archives of Psychology, 11*(70), 1-108.

Pavlov, I. P. (1941). *Lectures on conditioned reflexes: Vol. II. Conditioned reflexes and psychiatry.* New York: International Publishers.

Ross, S., & Buckalew, L. W. (1983). The placebo as an agent in behavioral manipulation: A review of problems, issues, and affected measures. *Clinical Psychology Review, 3*, 457-471.

Saltzstein, H.D., & Sandberg, L. (1975). The relative effectiveness of direct and indirect persuasion. *The Journal of Psychology, 91*, 39-48.

Scott, W. D. (1910). Personal differences in suggestibility. *Psychological Review, 17*, 147-154.

Scullin, M. H., & Ceci, S. J. (2001). A suggestibility scale for children. *Personality and Individual Differences, 30*, 843-856.

Siegler, R. S. (1992). The other Alfred Binet. *Developmental Psychology, 28*(2), 179-190.

Sherif, M. (1936). *The psychology of social norms*. New York: Harper.

Shobe, K. K., & Kihlstrom, J. F. (2002). Interrogative suggestibility and "memory work." In M. L. Eisen (Ed.), Memory and suggestibility in the forensic interview. *Personality and clinical psychology series* (pp. 309-327). Mahwah, NJ: Lawrence Erlbaum Associates, Publishers.

Shor, R. E., & Orne, E. C. (1962). *Harvard group scale of hypnotic susceptibility.* Palo Alto, CA: Consulting Psychology Press.

Spanos, N. P., Perlini, A. H., & Lynda, A. (1989). Hypnosis, suggestion, and placebo in the reduction of experimental pain. *Journal of Abnormal Psychology, 98*, 285-293.

Steele, C. M. (1971). *The indirect and supererogatory indirect influence of a persuasive message.* Unpublished doctoral dissertation, Ohio State University.

Steele, C. M., & Ostrom, T. M. (1974). When is indirect persuasion more effect than direct persuasion? *Journal of Personality and Social Psychology, 29*(6), 737-741.

Stukát, K. G. (1958). *Suggestibility: A factorial and experimental analysis.* Stockholm: Almqvist & Wiksell.

Tasso, A. F. (2003). *Suggestion and suggestibility: A factor analysis.* Unpublished doctoral dissertation, University of Tennessee, Knoxville.

Towne, C. H. (1916). An experimental study of suggestibility. *Psychological Clinic, 10*, 1-12.

Trouton, D. S. (1957). Placebos and their psychological effects. *Journal of Mental Science, 103*, 344-354.

Turkkan, J. S. (1989). Classical conditioning: The new hegemony. *Behavioral and Brain Sciences, 12*, 121-179.

Wagstaff, G. F. (1991). Suggestibility: A social psychological approach. In J. F. Schumaker (Ed.), *Human suggestibility* (pp 132-145). New York: Routledge.

Wachtel, P. (1993). *Therapeutic communication.* New York: Guildford Press.

Weitzenhoffer, A. M., & Hilgard, E. R. (1959). *Stanford hypnotic susceptibility scale: Forms A and B.* Palo Alto, CA: Consulting Psychologists Press.

Wells, G. L., & Turtle, J. W. (1987). Eyewitness testimony research: Current knowledge and emergent controversies. *Canadian Journal of Behavioural Science, 19*(4), 363-388.

Whipple, G. M. (1924). *Manual of mental and physical tests. Part II.* Baltimore: Warwick and York.

White, R. S. (1930). Motor suggestion in children. *Child Development, 1*, 161-185.

Wicker, A.W. (1969). Attitudes verses actions: The relationship between verbal and overt behavioral responses to attitude objects. *Journal of Social Issues, 25*(4), 41-78.

Wickramasekera, I. (1980). A conditioned response model of the placebo effect: Predictions from the model. *Biofeedback and Self-Regulation, 5*, 5-18.

Winkel, J. D., & Nash, M. R. (2003). *How'd they do that: An examination of arm rigidity.* Paper presented at the annual conference for the Society of Clinical and Experimental Hypnosis.

Winkel, J. D., Kanouse, D. E., & Ware, J. E. (1982). Controlling for acquiescence response set in scale development. *Journal of Applied Psychology, 67*, 555-561.

Woolson, D. A. (1986). An experimental comparison of direct Ericksonian hypnotic induction procedures and the relationship to secondary suggestibility. *American Journal of Clinical Hypnosis, 29*(1), 23-28.

Woody, E. Z., Drugovic, M., & Oakman, J. M. (1997). A reexamination of the role of nonhypnotic suggestibility in hypnotic responding. *Journal of Personality and Social Psychology, 72*(2), 399-407.

Wundt, W. M. (1892). *Hypnotismus and suggestion*. Leipzig: Engelmann.

Zenger, B., & Fahle, M. (1997). Missed targets are more frequent than false alarms: A model for error rates in visual search. *Journal of Experimental Psychology: Human Perception and Performance, 23*(6), 1783-1791.

APPENDICES

APPENDIX A: TABLES

Table A-1

Summary of Classic Factor Analytic Studies on Suggestibility

Authors	Factors Identified
Eysenck & Furneaux (1945)	Primary / Direct Secondary / Indirect Tertiary / Prestige
Grimes (1948)	No clearly delineated factors
Benton & Bandura (1953)	No clearly delineated factors
Stukát (1958)	Primary / Ideo-motor Secondary / Sensory-Perceptual Tertiary / Prestige
Stukát (1958)	Primary / Ideo-motor
Stukát (1958)	Primary / Ideo-motor Type Secondary / Indirect
Duke (1961)	Primary / Direct Secondary / Indirect
Hammer, Evans & Barlett (1963)	Primary / Ideo-motor Secondary / Vividness of Imagery

Table A-2

Hypothesized Factor Structures

	Initiation	Intensification
Hypothesis #1		
Factor 1		
Auditory	Watch Test	Tone Test
Olfactory	Odor Test	Lemon Test
Tactile	Hand Test	Glass Test
Visual	Black Disk Test	Light Test
Model tested was a one-factor structure suggesting that sensory suggestibility is a unitary trait.		
Hypothesis #2		
Factor 1		
Auditory	Watch Test	
Olfactory	Odor Test	
Tactile	Hand Test	
Visual	Black Disk Test	
Factor 2		
Auditory		Tone Test
Olfactory		Lemon Test
Tactile		Glass Test
Visual		Light Test
Model tested was a two-factor structure suggesting that sensory suggestibility is composed of two distinct subtypes, initiation, and intensification.		
Hypothesis #3		
Factor 1		
Auditory	Watch Test	Tone Test
Factor 2		
Olfactory	Odor Test	Lemon Test
Factor 3		
Tactile	Hand Test	Glass Test
Factor 4		
Visual	Black Disk Test	Light Test
Model tested was a four-factor structure suggesting that sensory suggestibility is channel dependent.		

Table A-3

Sensory Suggestibility Measures

Measures	Type	Sensory Channel	Test Procedures	Measure of Suggestibility
Odor Test	Initiation	Olfactory	Ss are presented with 6 bottles labeled as containing different fragrances. The last 3 bottles contain only water.	Ss smell the labeled fragrance on 1 or more of the bottles containing only water.
Lemon Test	Intensification	Olfactory	Ss are presented with 9 bottles containing lemon extract. Ss are told that the greater the number on the bottle (1-9), the stronger the smell.	Ss smell the lemon order getting stronger as the bottles progress.
Black Disk Test	Initiation	Visual		Ss sees a green dot in the center of the disk.
Light Test	Intensification	Visual		Ss perceive the light getting brighter.
Hand Test	Initiation	Tactile		Ss sense the heat from a hand on their skin.
Glass Test	Intensification	Tactile		Ss feel a glass getting heavier as the experimenter pretends to pour water into a funnel.
Watch Test	Initiation	Auditory		Ss hear the ticking of a pocket watch.
Tone Test	Intensification	Auditory		Ss hear a tine getting louder as the experimenter manipulates a tine generate.

Table A-4

Distribution of the Dichotomous Variables

	N	Minimum	Maximum	Mean	SD
Odor Test	144	0	1	.38	.488
Light Test	144	0	1	.83	.380
Tone Test	145	0.00	1.00	.7655	.42514
Glass Test	141	0	1	.77	.425
Odor Test	144	0.00	1.00	.6458	.47993
Disk Test	145	0	1	.39	.490
Watch Test	143	0	1	.22	.418
Hand Test	145	0	1	.40	.492
Valid N (listwise)	136				

Table A-5

Distribution of the Continuous Variables

	N	Minimum	Maximum	Mean	SD
Odor Test	145	.00	9.00	3.5931	3.52471
Light Test	143	.00	9.00	6.8462	2.73297
Tone Test	145	.00	9.00	6.5862	2.99904
Glass Test	141	.00	9.00	5.8652	3.05712
Odor Test	143	.00	9.00	4.8881	3.35904
Disk Test	145	.00	9.00	3.1793	3.56618
Watch Test	143	.00	9.00	2.1399	3.25144
Hand Test	145	.00	9.00	3.4690	3.47622
Valid N (listwise)	135				

Table A-6
Correlation Matrix of Dichotomous Variables

	Lemon Test	Light Test	Tone Test	Glass Test	Odor Test	Disk Test	Watch Test	Hand Test	Hypnosis
Lemon Test									
Pearson Correlation	1	.240**	.201*	.183*	.219**	.252**	.090	.170*	.063
Sig. (2-tailed)		.004	.015	.030	.009	.002	.286	.041	.457
N	144	143	144	140	143	144	142	144	143
Light Test									
Pearson Correlation	.240**	1	.274**	.113	.003	.146	.161	.115	.090
Sig. (2-tailed)	.004		.001	.182	.970	.081	.056	.171	.283
N	143	144	144	140	143	144	142	144	143
Tone Test									
Pearson Correlation	.201*	.274**	1	.197*	.101	.145	-.015	.086	-.039
Sig. (2-tailed)	.015	.001		.019	.228	.081	.855	.302	.644
N	144	144	145	141	144	145	143	145	144
Glass Test									
Pearson Correlation	.183*	.113	.197*	1	.157	.141	-.016	.148	-.015
Sig. (2-tailed)	.030	.182	.019		.064	.096	.850	.080	.857
N	140	140	141	141	140	141	139	141	140
Odor Test									
Pearson Correlation	.219**	.003	.101	.157	1	.174*	-.066	.194*	.082
Sig. (2-tailed)	.009	.970	.228	.064		.037	.433	.020	.328
N	143	143	144	140	144	144	142	144	143
Disk Test									
Pearson Correlation	.252**	.146	.145	.141	.174*	1	.043	.294**	-.099
Sig. (2-tailed)	.002	.081	.081	.096	.037		.613	.000	.238
N	144	144	145	141	144	145	143	145	144
Watch Test									
Pearson Correlation	.090	.161	-.015	-.016	-.066	.043	1	.043	.014
Sig. (2-tailed)	.286	.056	.855	.850	.433	.613		.613	.869
N	142	142	143	139	142	143	143	143	142
Hand Test									
Pearson Correlation	.170*	.115	.086	.148	.194*	.294**	.043	1	-.010
Sig. (2-tailed)	.041	.171	.302	.080	.020	.000	.613		.907
N	144	144	145	141	144	145	143	145	144
Hypnosis									
Pearson Correlation	.063	.090	-.039	-.015	.082	-.099	.014	-.010	1
Sig. (2-tailed)	.457	.283	.644	.857	.328	.238	.869	.907	
N	143	143	144	140	143	144	142	144	144

**Correlation is significant at the 0.01 level (2-tailed)
*Correlation is significant at the 0.05 level (2-tailed)

Table A-7
Correlation Matrix of Continuous Variables

	Lemon Test	Light Test	Tone Test	Glass Test	Odor Test	Disk Test	Watch Test	Hand Test	Hypnosis
Lemon Test									
Pearson Correlation	1	.154	.195*	.136	.220**	.201*	.052	.154	.059
Sig. (2-tailed)		.067	.019	.107	.008	.015	.535	.064	.483
N	145	143	145	141	143	145	143	145	144
Light Test									
Pearson Correlation	.154	1	.247**	.092	.015	.141	.094	.135	.048
Sig. (2-tailed)	.067		.003	.281	.863	.092	.265	.107	.572
N	143	143	143	139	141	143	141	143	142
Tone Test									
Pearson Correlation	.195*	.247**	1	.217**	.098	.151	-.029	.069	.001
Sig. (2-tailed)	.019	.003		.010	.247	.070	.732	.412	.986
N	145	143	145	141	143	145	143	145	144
Glass Test									
Pearson Correlation	.136	.092	.217**	1	.152	.164	-.021	.219**	-.042
Sig. (2-tailed)	.107	.281	.010		.074	.052	.809	.009	.623
N	141	139	141	141	139	141	139	141	140
Odor Test									
Pearson Correlation	.220**	.015	.098	.152	1	.164*	-.024	.101	.028
Sig. (2-tailed)	.008	.863	.247	.074		.050	.782	.229	.743
N	143	141	143	139	143	143	141	143	142
Disk Test									
Pearson Correlation	.201*	.141	.151	.164	.164*	1	.070	.325**	-.109
Sig. (2-tailed)	.015	.092	.070	.052	.050		.406	.000	.195
N	145	143	145	141	143	145	143	145	144
Watch Test									
Pearson Correlation	.052	.094	-.029	-.021	-.024	.070	1	.082	-.033
Sig. (2-tailed)	.535	.265	.732	.809	.782	.406		.332	.693
N	143	141	143	139	141	143	143	143	142
Hand Test									
Pearson Correlation	.154	.135	.069	.219**	.101	.325**	.082	1	-.006
Sig. (2-tailed)	.064	.107	.412	.009	.229	.000	.332		.943
N	145	143	145	141	143	145	143	145	144
Hypnosis									
Pearson Correlation	.059	.048	.001	-.042	.028	-.109	-.033	-.006	1
Sig. (2-tailed)	.483	.572	.986	.623	.743	.195	.693	.943	
N	144	142	144	140	142	144	142	144	144

**Correlation is significant at the 0.01 level (2-tailed)
*Correlation is significant at the 0.05 level (2-tailed)

Table A-8

Communalities Among the Dichotomous Variables

	Initial	Extraction
Odor Test	1.000	.430
Light Test	1.000	.642
Tone Test	1.000	.618
Glass Test	1.000	.357
Odor Test	1.000	.497
Disk Test	1.000	.466
Watch Test	1.000	.741
Hand Test	1.000	.549

Extraction Method: Principal Component Analysis

Table A-9

Total Variance Explained for the Dichotomous Variables

Component	Total	% of Variance	Cumulative %
Initial Elgenvalues			
1	2.071	25.890	25.890
2	1.187	14.838	40.728
3	1.040	13.005	53.733
4	.856	10.698	64.432
5	.817	10.214	74.645
6	.729	9.119	83.764
7	.673	8.417	92.181
8	.626	7.819	100.000
Extraction Sums of Squared Loadings			
1	2.071	25.890	25.890
2	1.187	14.838	40.728
3	1.040	13.005	53.733
Rotation Sums of Squared Loadings			
1	1.649	20.607	20.607
2	1.532	19.148	39.755
3	1.118	13.978	53.733

Extraction Method: Principal Component Analysis

Table A-10

Initial Factor Solution for the Dichotomous Variables

	Component Matrix		
	1	2	3
Odor Test	.644		
Light Test	.524	.587	
Tone Test	.508		-.539
Glass Test	.467		-.341
Odor Test	.496	-.499	
Disk Test	.597		
Watch Test		.610	.597
Hand Test	.540		.411

Extraction Method: Principal Component Analysis (3 components extracted)

Table A-11

Rotated Factor Solution for the Dichotomous Variables

	Related Component Matrix		
	1	2	3
Odor Test	.454	.456	
Light Test		.728	.331
Tone Test		.767	
Glass Test		.420	-.338
Odor Test	.623		-.325
Disk Test	.660		
Watch Test			.855
Hand Test	.737		

Extraction Method: Principal Component Analysis
Rotation Method: Varimax with Kaiser Normalization (Rotation converged in 4 iterations)

Table A-12

Communalities Among the Continuous Variables

	Initial	Extraction
Odor Test	1.000	.355
Light Test	1.000	.650
Tone Test	1.000	.642
Glass Test	1.000	.340
Odor Test	1.000	.473
Disk Test	1.000	.468
Watch Test	1.000	.686
Hand Test	1.000	.512

Extraction Method: Principal Component Analysis

Table A-13

Total Variance Explained for the Continuous Variables

Component	Total	% of Variance	Cumulative %
Initial Elgenvalues			
1	1.981	24.763	24.763
2	1.092	13.644	38.406
3	1.054	13.181	51.587
4	.935	11.688	63.275
5	.836	10.444	73.719
6	.754	9.425	83.144
7	.719	8.988	92.132
8	.629	7.868	100.000
Extraction Sums of Squared Loadings			
1	1.981	24.763	24.763
2	1.092	13.644	38.406
3	1.054	13.181	51.587
Rotation Sums of Squared Loadings			
1	1.728	21.603	21.603
2	1.307	16.335	37.938
3	1.092	13.649	51.587

Extraction Method: Principal Component Analysis

Table A-14

Initial Factor Solution for the Continuous Variables

	Component Matrix		
	1	2	3
Odor Test	.594		
Light Test	.439		.645
Tone Test	.491	-.313	.550
Glass Test	.518		
Odor Test	.483		-.409
Disk Test	.608		
Watch Test		.820	
Hand Test	.561	.334	

Extraction Method: Principal Component Analysis (3 components extracted)

Table A-15

Rotated Factor Solution for the Continuous Variables

	Rotated Component Matrix		
	1	2	3
Odor Test	.528		
Light Test		.747	
Tone Test		.760	
Glass Test	.439		
Odor Test	.615		-.302
Disk Test	.666		
Watch Test			.826
Hand Test	.644		.313

Extraction Method: Principal Component Analysis
Rotation Method: Varimax with Kaiser Normalization (Rotation converged in 5 iterations)

Table A-16

Level of Difficulty for the Sensory Measures Before Adjustment

	Type	Pass	%Pass	Fail	N
Odor Test	Initiation	93	64.6	51	144
Black Disk	Initiation	57	39.3	88	145
Watch Test	Initiation	32	22.4	111	143
Hand Test	Initiation	58	40.0	87	145
Lemon Test	Intensification	55	38.2	89	144
Light Test	Intensification	119	82.6	25	144
Tone Test	Intensification	111	76.6	34	145
Glass Test	Intensification	108	76.6	33	141

Table A-17

Level of Difficulty for the Sensory Measures After the Adjustment

	Type	Pass	%Pass	Fail	N
Odor Test	Initiation	66	45.8	78	144
Black Disk	Initiation	66	45.5	79	145
Watch Test	Initiation	62	43.4	81	143
Hand Test	Initiation	75	51.7	70	145
Lemon Test	Intensification	83	57.2	62	145
Light Test	Intensification	75	52.1	69	144
Tone Test	Intensification	74	51.0	71	145
Glass Test	Intensification	77	54.2	65	142

Table A-18

Standardized Regression Weights for the One-Factor Model

of Dichotomous Variables

		Estimate
Lemon Test	<---Factor 1	0.533
Odor Test	<---Factor 1	0.336
Glass Test	<---Factor 1	0.356
Hand Test	<---Factor 1	0.406
Light Test	<---Factor 1	0.379
Disk Test	<---Factor 1	0.483
Tone Test	<---Factor 1	0.387
Watch Test	<---Factor 1	0.098

Table A-19

Regression Weights Significance Levels for the One-Factor Model

of Dichotomous Variables

		Estimate	S.E.	C.R.	P
Lemon Test	<---Factor 1	1.613	0.603	2.675	0.007
Odor Test	<---Factor 1	1.000			
Glass Test	<---Factor 1	0.939	0.407	2.307	0.021
Hand Test	<---Factor 1	1.240	0.504	2.460	0.014
Light Test	<---Factor 1	0.894	0.375	2.385	0.017
Disk Test	<---Factor 1	1.469	0.562	2.612	0.009
Tone Test	<---Factor 1	1.020	0.423	2.409	0.016
Watch Test	<---Factor 1	0.253	0.291	0.869	0.385

Table A-20

Standardized Regression Weights for the Two-Factor Model

of Dichotomous Variables

		Estimate
Lemon Test	<---Factor 2	0.443
Odor Test	<---Factor 1	0.331
Glass Test	<---Factor 2	0.333
Hand Test	<---Factor 1	0.576
Light Test	<---Factor 2	0.507
Disk Test	<---Factor 1	0.514
Tone Test	<---Factor 2	0.522
Watch Test	<---Factor 1	0.043

Table A-21

Regression Weights Significance Levels for the Two-Factor Model

of Dichotomous Variables

		Estimate	S.E.	C.R.	P
Lemon Test	<---Factor 2	1.000			
Odor Test	<---Factor 1	1.000			
Glass Test	<---Factor 2	0.654	0.294	2.222	0.026
Hand Test	<---Factor 1	1.783	0.920	1.937	0.053
Light Test	<---Factor 2	0.893	0.342	2.609	0.009
Disk Test	<---Factor 1	1.588	0.760	2.089	0.037
Tone Test	<---Factor 2	1.028	0.395	2.601	0.009
Watch Test	<---Factor 1	0.114	0.317	0.358	0.720

Table A-22

Reliability Analysis of the Dichotomous Variables

(A) Reliability Statistics

Cronbach's Alpha	Cronbach's Alpha Based on Standardized Items	N of Items
.567	.562	8

(B) Item-Total Statistics

	Scale Mean if Item Deleted	Scale Variance if Item Deleted	Corrected Item-Total Correlation	Squared Multiple Correlation	Cronbach's Alpha if Item Deleted
Lemon Test	4.0294	2.414	.397	.171	.489
Light Test	3.5735	2.720	.313	.163	.525
Tone Test	3.6471	2.689	.266	.125	.536
Odor Test	3.7647	2.611	.261	.120	.538
Disk Test	4.0074	2.467	.352	.149	.506
Hand Test	3.9926	2.511	.316	.132	.519
Glass Test	3.6397	2.721	.248	.077	.542
Watch Test	4.1765	3.006	.046	.040	.599

Table A-23

Reliability Analysis of the Continuous Variables

(A) Reliability Statistics

Cronbach's Alpha	Cronbach's Alpha Based on Standardized Items	N of Items
.538	.535	8

(B) Item-Total Statistics

	Scale Mean if Item Deleted	Scale Variance if Item Deleted	Corrected Item-Total Correlation	Squared Multiple Correlation	Cronbach's Alpha if Item Deleted
Lemon Test	33.0815	120.657	.339	.130	.471
Light Test	29.8222	136.894	.241	.085	.510
Tone Test	30.1407	133.211	.243	.109	.508
Odor Test	31.8667	129.281	.243	.098	.508
Disk Test	33.4519	119.294	.347	.147	.467
Hand Test	33.1407	122.376	.320	.142	.479
Glass Test	30.8519	131.008	.265	.099	.501
Watch Test	34.5185	145.117	.040	.019	.576

Table A-24

Reliability Analysis of the Adjusted Variables

(A) Reliability Statistics

Cronbach's Alpha	Cronbach's Alpha Based on Standardized Items	N of Items
.308	.308	8

(B) Item-Total Statistics

	Scale Mean if Item Deleted	Scale Variance if Item Deleted	Corrected Item-Total Correlation	Squared Multiple Correlation	Cronbach's Alpha if Item Deleted
Lemon Test	3.4348	2.335	.101	.140	.292
Light Test	3.4710	2.163	.219	.130	.224
Tone Test	3.4928	2.208	.186	.140	.243
Odor Test	3.5507	2.264	.150	.086	.265
Disk Test	3.5290	2.003	.342	.202	.148
Hand Test	3.4638	2.061	.296	.147	.177
Glass Test	3.4493	3.154	-.376	.168	.520
Watch Test	3.5580	2.234	.172	.080	.252

APPENDIX B: FIGURES

Chi Sq = 18.407

df = 20

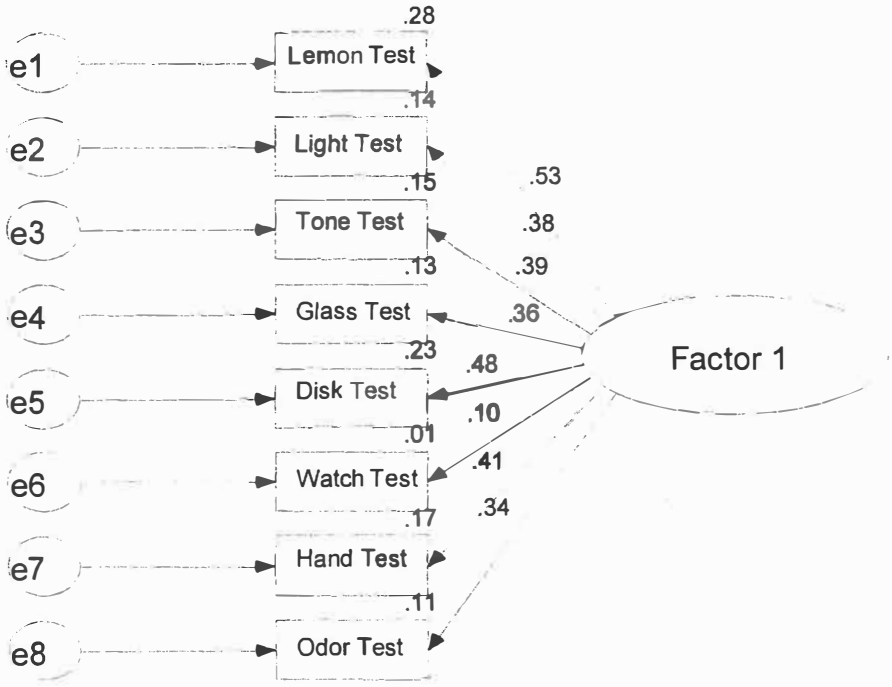

Figure B-1

One-Factor Model Dichotomous Variables

Chi Sq = 29.731

df = 20

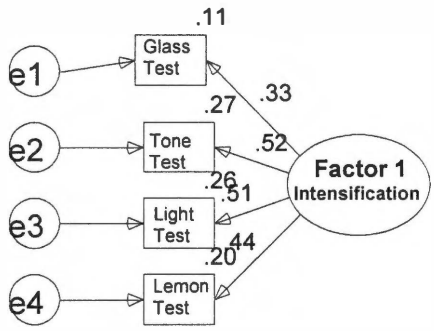

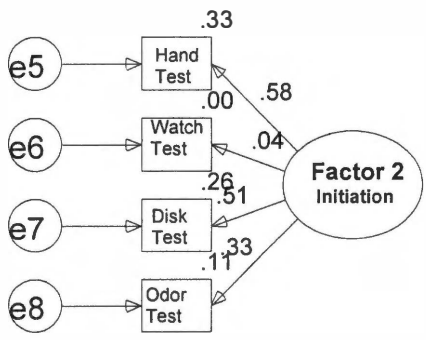

Figure B-2

Two-Factor Model Dichotomous Variables

VITA

Nicole Alexandra Pérez was born and raised in Arecibo, Puerto Rico. She graduated from Trina Padilla de Sanz High School in 1994 and continued on to pursue a Bachelor's degree. In 2002 she received a B.A. in Psychology with a minor in Sociology from the University of Tennessee. A year later, she was admitted into the doctoral program in clinical psychology at this same university working under Dr. Michael R. Nash and received her M.A. in the spring of 2006. Currently, she is working on her Ph.D. which she expects to complete by the spring of 2009.

8768 6507 57
11/08/06 VA