INSTALLATION AND OPERATION

OF AN

ENDOTHERMIC ATMOSPHERE GENERATOR

A THESIS

Submitted to
The Department of Chemical Engineering
of
The University of Tennessee
in
Partial Fulfillment of the Requirements
for the degree of
Bachelor of Science
in
Chemical Engineering

by

Thomas Alva Bailey
and
Joe Bachman Morton, Jr.

The University of Tennessee
Knoxville, Tennessee

June, 1958

ACKNOWLEDGMENT

The authors wish to express their appreciation to Dr. E. E. Stansbury for his aid and advice in carrying out this project; to Mr. E. H. Honeycutt, Sr., and his shop staff for their aid in installing the equipment; and to Mr. J. P. Boyd of the Westinghouse Electric Corporation for his aid in obtaining additional information from the factory on the equipment which was installed.

TABLE OF CONTENTS

CHAPTER		PAGE
I.	SUMMARY	1
II.	INTRODUCTION	2
III.	THEORY OF GAS ATMOSPHERES	3
IV.	MATERIALS AND EQUIPMENT	15
V.	PROCEDURE	24
VI.	DISCUSSION OF RESULTS	28
VII.	CONCLUSIONS AND RECOMMENDATIONS	33
REFERENCES AND BIBLIOGRAPHY		35
APPENDIX		39

LIST OF TABLES

TABLE PAGE

I. Schedule of Operation. 40

II. Gas Analysis Reports 41

III. Natrual Gas Analysis 42

IV. Gas Atmosphere Data for Natural Gas. 43

V. Ratings and Dimensions of the Generator. 44

VI. Composition and Cost of a Typical Endothermic Atmosphere 45

LIST OF FIGURES

FIGURE PAGE

1. Relationship Between H_2O:H_2 and CO_2:CO Ratios at Different Temperatures in Accordance with the Reaction $CO + H_2O \rightleftharpoons CO_2 + H_2$ 12

2. Endogas Control and Flow Diagram 17

3. Schematic Wiring Diagram for Vaporstat, Solenoids and Timer. 18

4. Schematic Representation of Heating and Control Circuit. 21

5. Construction of Timer. 23

6. Composition-Ratio Graph from Experimental Data 29

7. Endogas from Natural Gas 30

CHAPTER I

SUMMARY

The object of this investigation was to install a 250 CFH Westinghouse Endothermic Atmosphere Generator in the Chemical Engineering laboratory at the University of Tennessee, put it into operation and carry out initial performance tests. No previous work on this equipment had been done at the University and no information was available on the operating characteristics of this generator.

The generator was installed, put into operation and produced an atmosphere from which data were obtained and reported in the form of a graph showing percentage composition of the constituents of the atmosphere as a function of air to gas ratio over the range of air to gas ratios from 2.4 to 4.5.

As a further study of this equipment, it is recommended that (1) the data be confirmed by subsequent operation, (2) a study of gas flow characteristics be made with emphasis on metering devices, kinetics and pressure variation, (3) an investigation be made of the temperature variation within the reaction chamber, (4) other types of gas analyses be investigated for instantaneous analyses, (5) the properties of the feed gas be investigated with respect to product atmosphere, (6) a cost analysis be made utilizing local rates, (7) additional safety devices installed, and (8) the equipment be thoroughly inspected and cleaned.

CHAPTER II

INTRODUCTION

The University of Tennessee obtained through the United States Government surplus property program a 250 CFH Westinghouse Endothermic Atmosphere Generator, S.O. 24-P-351. The generator was built for Columbia University in 1944 for use on the "Manhattan Project".(6) Since its capacity was the proper magnitude for laboratory use, the present project was initiated to investigate the feasibility of placing the equipment into operation and to perform tests showing its potential value in providing protective atmospheres for heat treatments and for laboratory experiments on gas reactions.

Endothermic atmospheres, referred to as "Endogas" by Westinghouse, are reducing in nature and are used for heat treating applications. These applications permit bright hardening of high carbon and high speed steels, sintering of high carbon steel powder compacts, brazing of ferrous metals and use as a carrier gas in gas carburizing applications.

No previous work on this equipment had been done at the University and no information was available on the operating characteristics of this particular generator.

In order to accomplish the objectives of this investigation it was decided that the generator, after installation, was to be operated at air to gas ratios from 2.4 to 4.5. Samples of the Endogas over this range were to be collected and analyzed to determine the composition (by per cent volume) of the gas. Using this data a plot was to be made of per cent composition versus air to gas ratio from which an air to gas ratio for any desired atmosphere could be obtained.

CHAPTER III

THEORY OF GAS ATMOSPHERES

General

In general a gas or mixture of gases constitutes an atmosphere in industrial gas terminology. "Furnace atmosphere" means a gas or mixture of gases used to displace air in a furnace chamber. The atmosphere may either surround, protect or react with the product.

With respect to metals these atmospheres are classified as follows:(2)

1. Neutral. In a neutral atmosphere no reaction takes place. The sum of the CO and H_2 is not more than 0.05% and the oxygen does not exceed 0.05%.
2. Oxidizing. In an oxidizing atmosphere the oxygen in the gas combines with the metal. The oxygen concentration exceeds 0.05% and the sum of the CO and H_2 is below 0.05%.
3. Reducing. A reducing atmosphere reacts at elevated temperatures to reduce oxides to metal. The sum of CO and H_2 exceeds 0.05% and the oxygen does not exceed 0.05%.
4. Metallurgically active. A metallurgically active atmosphere adds or removes some constituent from the work such as the addition or extraction of carbon from a steel surface.

The American Gas Association Testing Laboratory has suggested these limitations for the neutral, oxidizing and reducing atmospheres since these terms have been misapplied to gases produced by combustion.(5)

Reference must be made to the effect of the atmosphere on the product being processed; for example, scaling, carburizing, decarburizing, nitriding, etc.

The most common components of prepared atmospheres are nitrogen, oxygen, carbon dioxide, water vapor, carbon monoxide, hydrogen and hydrocarbons. For ordinary low temperature heating processes nitrogen, in the molecular state and of high purity, is inert to most metals. Oxygen is very oxidizing and reactive with metals and carbon at elevated temperatures and it is considered the most undesirable component in a protective atmosphere for metals. At low temperatures carbon dioxide is usually regarded as fairly unreactive but at elevated temperatures it is an oxidizing gas reacting with iron and carbon. Water vapor is considered as a strong oxidizing agent even at fairly low temperatures. On the other hand, carbon monoxide is a reducing gas which becomes increasingly stable at higher temperatures. Hydrogen is a powerful reducing agent.

Chemical Equilibria

The laws of chemical equilibria must be considered in the preparation of the proper atmosphere. The gases may react with each other or with the metal being processed. The law of mass action is the fundamental concept of these reactions since they are generally reversible and the rates are primarily dependent on the concentrations (or more correctly the activities) of the various reactants.

For the reaction $aA + bB = cC + dD$ where A, B, C and D are the reactants and a, b, c and d are their respective concentrations the law

of mass action states that

$$\frac{[C]^c\ [D]^d}{[A]^a\ [B]^b} = K \text{ (constant)} \tag{1}$$

where the [A], [B], [C] and [D] denote the molar concentrations of A, B, C and D respectively. The constant K is the equilibrium constant and in a given system varies only with temperature.

This variation of K with temperature is expressed by integration of the van't Hoff equation

$$\frac{d}{dt} \ln K = \frac{\Delta H^o}{RT^2} \tag{2}$$

while assuming the heat of reaction ΔH^o constant over the range of temperature being investigated. The result is of the form

$$\ln K = \frac{A}{T} + C \tag{3}$$

where A is a constant determined by the heat of reaction and the gas constant R, C is the constant of integration and T is the absolute temperature.

To apply these relations to a given reaction at a given temperature the equilibrium constant K is found from equation (3). Referring to equation (1) the molar concentration of any one of the reactants may be found if the other molar concentrations are specified.

The principal gases common to furnace atmospheres are N_2, O_2, CO_2, H_2O, H_2, CO and CH_4. A number of chemical reactions involving these gases are listed below according to general usage.

Combustion Reactions:

(1) $2H_2 + O_2 = 2H_2O$

(2) $2CO + O_2 = 2CO_2$

(3) $CH_4 + 2O_2 = CO_2 + 2H_2O$

Dissociation Reactions:

(4) $2NH_3 + \text{heat} = N_2 + 3H_2$

(5) $CH_4 + \text{heat} = 2H_2 + C$

(6) $C_3H_8 + \text{heat} = 4H_2 + 3C$

Oxidizing Reactions:

(7) $O_2 + 2Fe = 2FeO$

(8) $O_2 + 4FeO = 2Fe_2O_3$

(9) $CO_2 + Fe = CO + FeO$

(10) $CO_2 + 3FeO = Fe_3O_4 + CO$

(11) $H_2O + Fe = H_2 + FeO$

(12) $H_2O + 3FeO = H_2 + Fe_3O_4$

Reducing Reactions:

(13) $FeO + H_2 = Fe + H_2O$

(14) $FeO + CO = Fe + CO_2$

Water-Gas Reaction:

(15) $CO + H_2O = CO_2 + H_2$

Etching Reaction:

(16) $2CO = CO_2 + C$

Decarburizing and Carburizing Reactions:

(17) $O_2 + C = CO_2$

(18) $O_2 + Fe_3C = 3Fe + CO_2$

(19) $CO_2 + Fe_3C = 3Fe + 2CO$

(20) $CH_4 + 3Fe = Fe_3C + 2H_2$

At room temperatures, these reactions require considerable time for near completion. Even though at the surface of a metal specimen these reactions may reach equilibrium rapidly, solid state diffusion within the specimen is usually the greater factor in controlling the rate of the reaction. For example, the depth of carbon penetration in a carburizing reaction varies almost directly with the square root of the time. It is generally noted that these reactions proceed more rapidly at higher temperatures. It should be emphasized, however, that the significant temperature is that of the surface of the metal instead of the furnace walls or atmosphere. Uniform temperature is necessary to obtain uniform results over a metal surface.

If the volume of gas used is so great that fresh gas is continuously sweeping over the work, equilibrium conditions within the furnace may never be reached. Some reactions require a static atmosphere while other reactions require constant circulation.

The moisture content can be controlled if hydrogen is mixed with inert gases through control of the H_2O:H_2 ratio. If the mixture also contains CO and CO_2, the moisture cannot be controlled completely since at elevated temperatures this mixture is unstable and reacts to produce water vapor.

Endothermic Atmospheres

An endothermic atmosphere (Endogas) is produced by combustion of air and natural gas at a temperature of 1900°F with air-gas ratios between 2.4 and 4.5. External heat must be supplied to promote or complete the reaction, thus the name "endothermic gas" or "Endogas." For air-gas ratios

between 2.4 and 2.8, rich Endogas, completely reacted fuel gas, is produced and for air-gas ratios between 2.8 and 4.5, lean Endogas, partially reacted or cracked fuel gas, is produced.

The importance of reaching equilibrium conditions in the reaction chamber is essential to prepare a gas which will be stable enough to act in a predictable manner in the heat treating furnace. There is some heat produced by the partial combustion of the air-gas mixture entering the retort chamber but considerable heat is absorbed before the hot gas leaves the chamber. In the absence of external heat, after reaching the initial peak of approximately 1650°F(4) the temperature drops to about 1400°F indicating an endothermic reaction. This external heat must be supplied to promote the reaction to equilibrium at approximately 1900°F.

Temperature gradients are related to the flow of gas through the retort. Also there is a temperature gradient from the outside to the center of the catalyst bed. Heat is transferred through the retort wall rapidly enough to supply the requirements of the reacting gas and consequently the temperature near the wall gradually increases along the length of the retort. Temperature measurements at the center of the bed, however, drop after an initial exothermic reaction due to the poor rate of heat transfer through the catalyst. This accounts for the temperature gradient wall to center and influences the exit temperature of the atmosphere and its quality or composition.

The range of operation of an endothermic gas producer is effected by adjustment of the air-gas ratio. The output gas contains about 20% CO, 38% H_2, 0.5% CH_4 and 41.5% N_2 with no CO_2 or O_2 at an air-gas ratio

of 2.4 to 1. The ratio can be increased until the gas is saturated and the CO_2 content becomes as high as 2%.

The speed of any reaction increases with temperature. From a practical standpoint there is little to be gained above 1850° to 1900°F as is borne out by gas analyses, dew point readings and carbon potential tests of gases from generators operating at 1600° to 2200°F. Gas analyses show little, if any, change above 1800°F. The dew points are approximately the same and carbon potential values show no definite trend.(4) The air to gas ratio is more effective than high temperature in lowering the CO_2 and dew point of the prepared gas.

Endothermic gas is quite flammable and explosive because of its high carbon monoxide and hydrogen content. It has a specific gravity of 0.622, a high thermal conductivity with respect to air of about 3.23 and a thermal content of about 200 Btu/ft^3.

The quality of the prepared atmosphere depends largely on the air-gas ratio, temperature, detention time and activity of the catalyst.

The relation of air-gas ratio to composition of the generated atmosphere is shown in Figure 6. It is evident that a variation in the air-gas ratio reflects on the product atmosphere such that careful control must be maintained.

Most atmosphere generators utilize retorts packed with catalyst. The catalyst does not change the equilibrium constant value but it does reduce the time required to attain equilibrium. If the catalyst is not very active, little benefit is gained. The activity is reduced by poisions, foreign substances such as soot, which may react with the catalyst or

blanket its surface, preventing gas contact. In atmospheres for carbon correction the control of catalyst poisions is more critical.

Theory of Gas Analysis

The theory of constant-pressure gas analysis is simple. A volume of gas sample is subjected to successive treatments to remove the various components. The volume is measured before and after each treatment under identical conditions of temperature and pressure. The volume decrease is the measure of the removal of a constituent and the results are reported on a percentage basis.

Complete analysis of a gaseous mixture is generally divided into two parts: first, the absorption phase, and second, the burning or explosion phase. CO_2, O_2 and CO are removed by chemical absorption in the order named. The second phase consists in testing for H_2 and hydrocarbons. This requires consumption of the H_2 or hydrocarbons by explosion or slow-burning.

The above method is the most direct method for measurement and control of heat treating atmospheres. Since this method is time consuming and requires highly trained personnel, many generators are operated with measurement of only one of the four gas components and assuming the other three constant. This is a rough estimate of the atmosphere and is used only to determine any drastic changes in furnace conditions.

The two components most commonly measured are CO_2 and water vapor, the latter frequently measured from the dew point. The dew point measurement has been preferred because of the development of automatic measuring equipment, unavailability of other satisfactory equipment and cost.

However, with the introduction of infrared analyzers other components may be measured. The decision of which gas or how many gases should be measured and controlled must be based on the particular problem and which can be measured more accurately and reliably by present day equipment. Examination of microsections of samples of treated work may also be a basis for analysis.

The relations of carbon potential, dew point and furnace temperatures indicate the following:

1. As dew point increases at a given temperature, carbon potential decreases.
2. As temperature increases, dew point decreases for a given carbon potential.
3. At constant dew point, carbon potential increases as temperature decreases.

The above relations are further illustrated in Figure 1 where the water gas reaction is considered. The equilibrium constant relations are also shown in Figure 1.

Adjustment of the dew point can be made by changing the dew point or the flow of the carrier gas to the furnace or passing additive gas to the furnace to shift the reaction.(3)

Carburizing Atmosphere

Gas carburizing is a process in which steel is heated above the critical point in an enveloping atmosphere such as to add carbon to the surface. Once the surface carbon is built up diffusion takes place as a function of time to give the required case depth. As the carbon

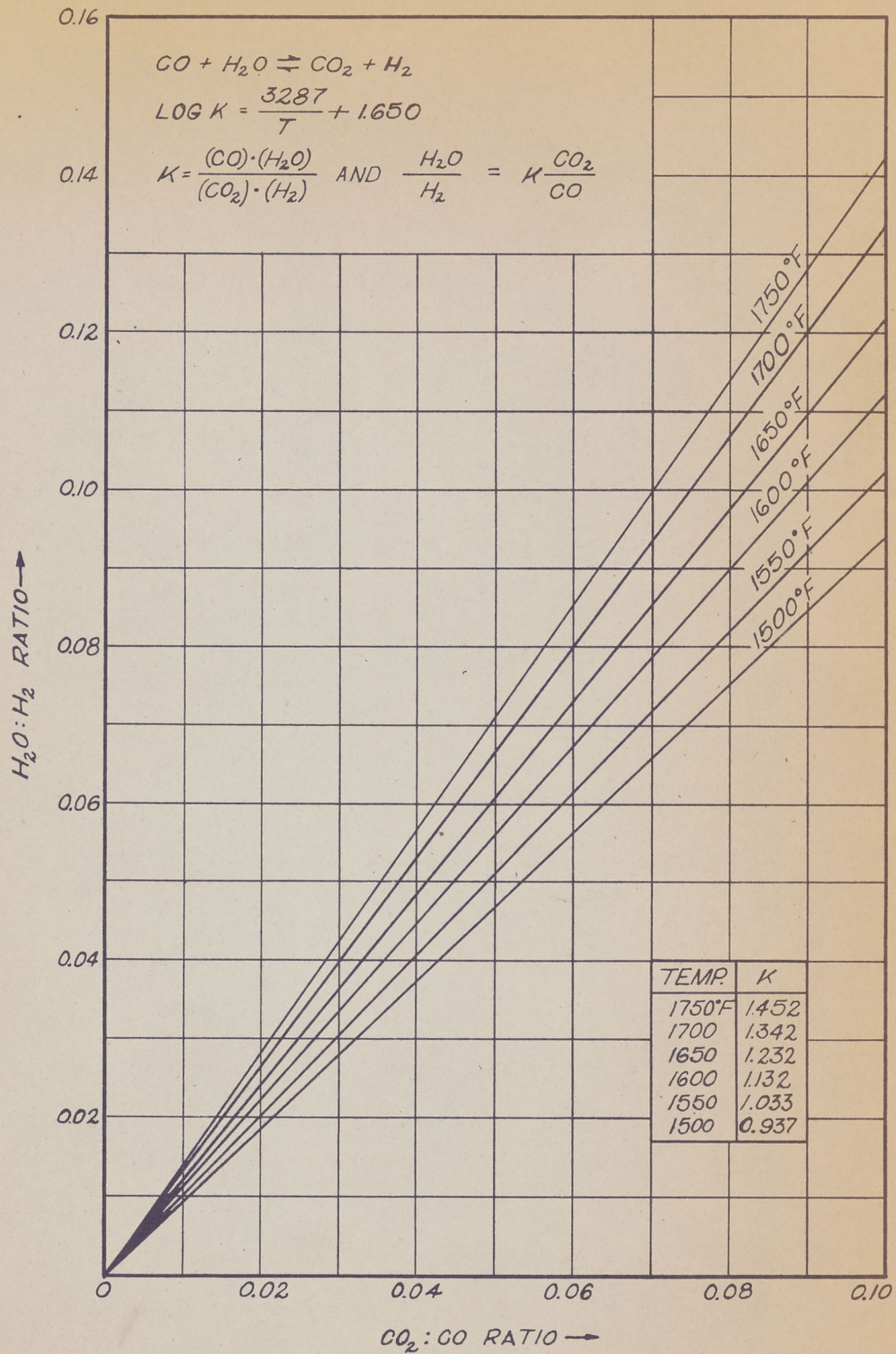

Figure 1. Relationship between $H_2O:H_2$ and $CO_2:CO$ ratios at different temperatures in accordance with the reaction $CO + H_2O \rightleftharpoons CO_2 + H_2$ (1)

diffuses into the steel, the surface carbon must be replenished from the atmosphere.

To study the characteristics of a carburizing atmosphere, there are two basic considerations:

(a) The water gas reaction

$$H_2O + CO \rightleftharpoons H_2 + CO_2$$

determines the equilibrium conditions to satisfy

$$K = \frac{[H_2]\ [CO_2]}{[H_2O]\ [CO]} \qquad \text{(see Figure 1)}$$

(b) Carbon availability for carburizing reactions is determined by the reaction

$$2CO \rightleftharpoons CO_2 + \underline{C}$$

for which

$$K = \frac{[CO_2]}{[CO]^2}\ (A_c)$$

where A_c is the activity of the carbon dissolved in the steel.

By choosing an A_c the ratio CO_2:CO is determined by the equilibrium relationship

$$K = \frac{[CO_2]}{[CO]^2}\ (A_c)$$

since K remains constant for a given temperature. From the equilibrium relationship of the water gas reaction, the ratio H_2O:H_2 is then fixed. Therefore, the dew point is a direct control of the carbon potential.

When annealing carbon steels, the carburizing action or "carbon potential" of the atmosphere can be adjusted by controlling the water vapor content to produce an atmosphere that would be neutral to the particular steel being treated. Control of the dew point down to condenser temperature is effected by simply adjusting the air-gas ratio. Very close control of the ratio is necessary when operating below +10°F (-12.2°C) dew point. At these low temperatures a drier must be incorporated in the system.

CHAPTER IV

MATERIALS AND EQUIPMENT

Description of Generator

The generator in question is a 250 CFH Westinghouse Endogas Generator rated at 6-kw, 110 volts, single phase, 60 cycles. This generator consists essentially of a metering system for measuring the rates of gas and air, a gas pump for introducing the mixture into the reactor, a retort filled with catalyst, a chamber for heating the retort, a cooling system and an automatic carbon potential control system.

The metering system for this generator consists of two Selas Flo-Scopes. The Flo-Scope for measuring air is Selas Catalog Number A2-1 with a capacity of 250 CFH. The gas scope is Selas Catalog Number A1-2 with a natural gas capacity of 75 CFH.

The gas pump consists of a Victor Acme Type XAS, size #315, positive displacement pump and by-pass regulator which serves to maintain a constant pressure at any output. The pump is mounted on a sub-base and driven by a 1 H.P. motor.

The retort in which the reaction takes place is a Westinghouse 1355614. It is a cast, welded joint type filled with nickel-impregnated activated aluminum catalyst. This catalyst cannot be replaced and in case it becomes degenerated the complete retort must be replaced. The retort is contained in a brick lined chamber which is electrically heated. The heating elements are nickel-chromium alloy.

The cooling system is composed of a surface type gas cooler which is provided with a two inch water inlet and outlet connection, a baffle

chamber for trapping the moisture and a ball float trap for discharging the condensed water.

The Endogas generator is equipped with automatic carbon pressure control so that by a simple adjustment the generator can be made to produce an atmosphere having a carbon potential in equilibrium with that of the steel being heat treated and at the temperature involved. The adjustment for carbon potential is made manually and, once made, will be maintained automatically. The carbon potential is adjustable from the low potentials involved in hardening medium carbon steels to the high potential required for hardening high speed and high carbon steels.

With reference to Figure 2, the carbon pressure control system is composed of the following items:

1. Vaporstat, Item 12, Type L-408-B, range 0-4 pounds
2. Solenoid Valve, Item 11, "Asco" Solenoid Valve 3/4 inch, Type "PJX", Catalog Number 80304
3. Solenoid Valve, Item 5, "Asco" Solenoid Valve 3/8 inch, Type "PIX", Catalog Number 826014
4. Timer-switch (constructed by authors, description given in a later section of this chapter)
5. Relief Regulator, Item 23, 3/4 inch, Type 38-Crawford.

The automatic carbon pressure control works because of a buildup of retort pressure which is the result of a limited and controlled deposit of carbon in the retort. This back pressure in the system causes the mercury switch in the Vaporstat, Item 12, Figure 2, to close, energizing the by-pass solenoid, Item 11, thereby increasing the volume of air flowing through the system (see Figure 3 for a schematic wiring diagram of this circuit) and

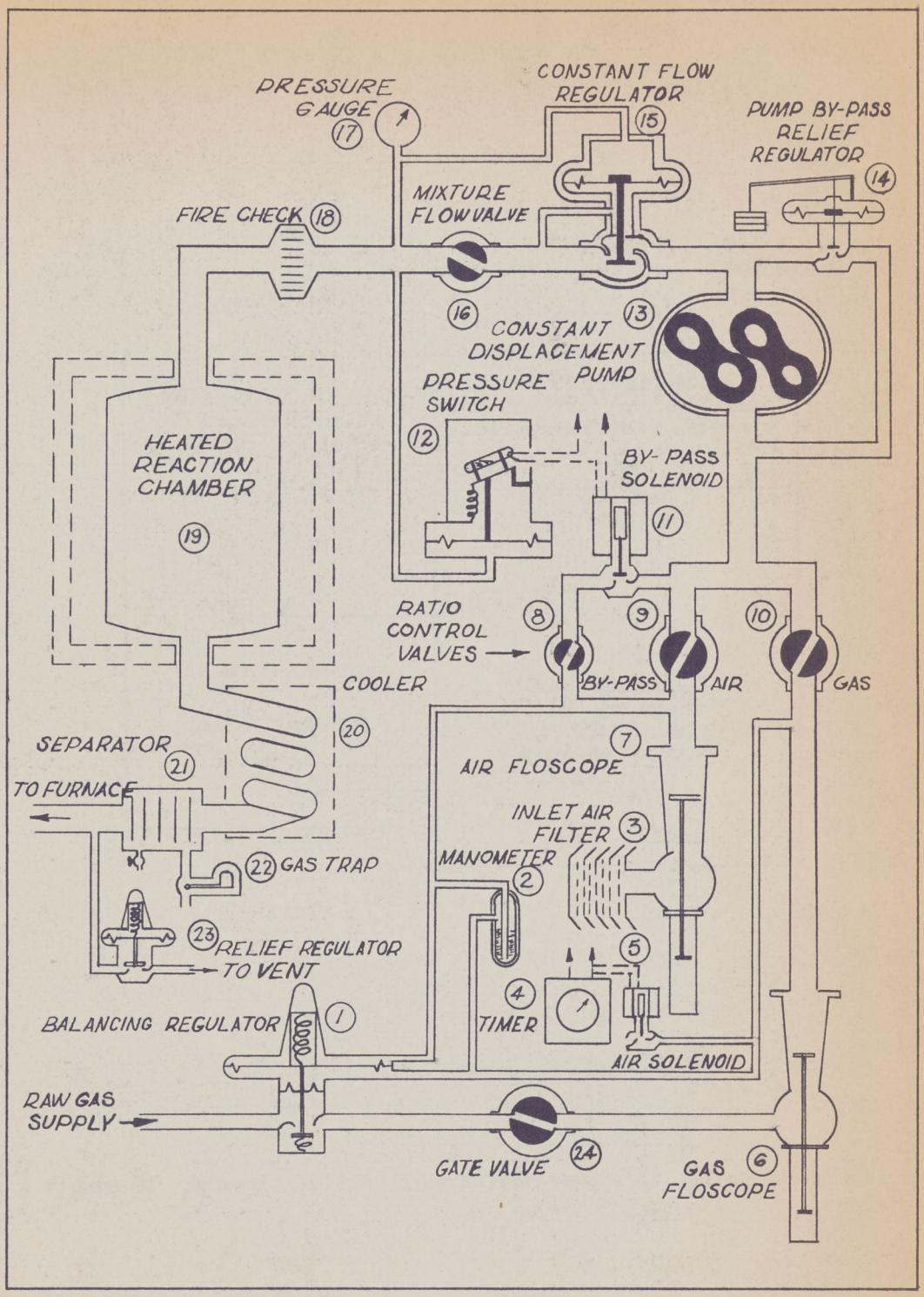

Figure 2. Endogas control and flow diagram

allowing the carbon buildup to be burned off. The closing of the mercury switch in the Vaporstat also energizes the timer, Item 4, which automatically at preset intervals, shuts off the gas supply to the generator by energizing the gas solenoid, Item 5. This action is to supplement the alternating lean-rich settings which are maintained by means of the pressure switch. This timer operates as long as the mercury switch in the Vaporstat is closed.

This periodic and timed interval is very short and does not affect the quality of the processed gas. It is not desirable to have the raw gas supply off for a period longer than two minutes. In general, an "off" period of one minute will be sufficient, and under no circumstances should the "off" period be greater than three minutes since the use of air alone at high temperatures may cause oxidation of the catalyst.

In order to make the setting for automatic carbon pressure control, a pressure buildup in the retort must be simulated. To make these adjustments set the pointer on the left-hand scale of the Vaporstat, Item 12, to a low value so that the mercury switch in the Vaporstat closes and causes the solenoid valve, Item 11, to open. This solenoid valve is located in a by-pass line on the inlet side of the pump along with a plug valve, Item 8. While this solenoid is open, adjust this plug valve to give a high air-gas ratio. This ratio should be about 20 per cent higher than the normal operating ratio. With this ratio set, adjust the relief valve regulator, Item 23, so that it opens at a back pressure slightly greater than the pressure required to force the full flow beyond the discharge valve in the exit line of the generator. This back pressure is observed by measuring it with a "U" tube manometer at the pet cock on the water separator. With full flow going into the distribution system, close the discharge valve and force

all the gas out the relief valve. The relief valve is set properly when the back pressure of water separator increases only slightly as discharge valve is closed off entirely. Under these conditions, the minimum Vaporstat differential setting should still be high enough to prevent the mercury switch from closing and allowing the solenoid valve to open in the air by-pass line.

The entire air and gas flow can be seen in Figure 2. The gas enters the system passing through the balancing regulator, Item 1, which cuts off the gas supply when the air solenoid opens as described previously in this chapter. The gas is metered through the gas Flo-Scope and passes through the gas valve, Item 10, which is used to control the air to gas ratio. At this point, the gas is mixed with air which has passed through the air filter, air Flo-Scope and air valve which should not be closed off more than the 45° position to prevent excessive suction on the pump. The mixture passes through the pump, constant flow regulator and the mixture flow valve, Item 10, which should be used to control the air flow. The mixture passes through the fire check into the heated reaction chamber containing the catalyst. From the reaction chamber, the gas passes through the cooling system into the system in which this atmosphere will be utilized.

The proper materials were not available to install an electrical system in accordance with the manufacturer's instructions.(8) The heating and controller circuits were installed as shown schematically in Figure 4.

The wiring plan for the generator called for an "Eagle" Signal Flexopulse Timer, Model HG-50, but this type of timer was not available. A timer was desired with which one to three minute intervals every thirty minutes could be determined, so such a timer was constructed using a 1 rph

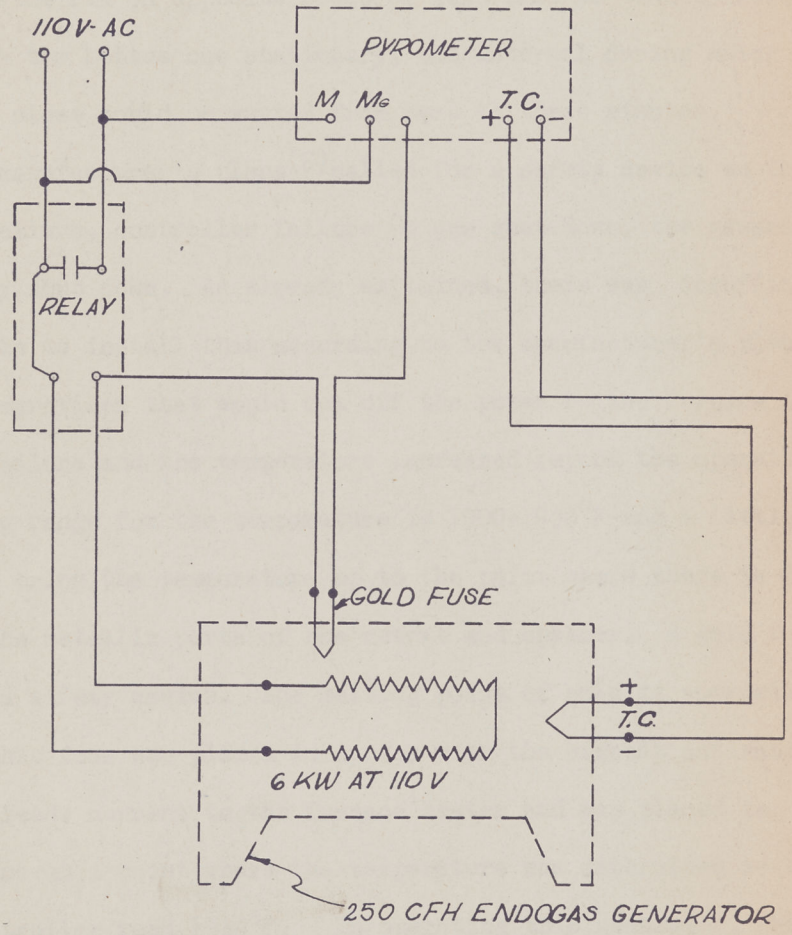

Figure 4. Schematic representation of heating and control circuit

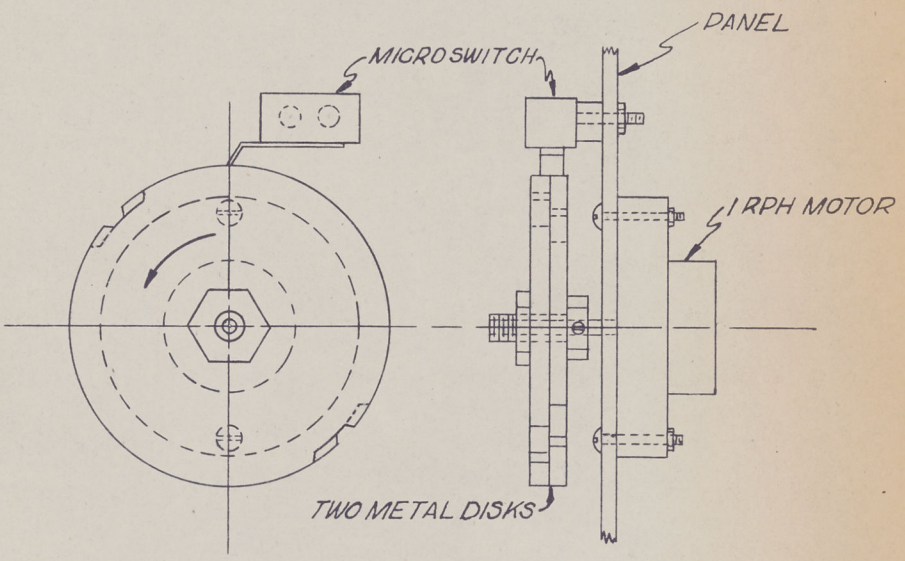

Figure 5. Construction of timer

CHAPTER V

PROCEDURE

When this project was undertaken at the beginning of the Fall Quarter, 1957, the initial job was one of cleaning the equipment and making the necessary external connections. All electrical connections were made according to the description in Chapter IV and Figures 3 and 4.

Since the product gas was not to be utilized in heat treatings, it was necessary to vent the discharge to the atmosphere. This was accomplished by running a pipe from the discharge line and relief valve out of a window near the generator. The product gas is combustible and must be vented to the atmosphere. A pet cock was installed at the exit from the separator from which samples could be drawn.

For a cooling water supply, a 1/2 inch water line was connected to the water cooler and a 1 inch discharge line was run to a nearby drain. A regulating valve was included in the inlet line.

For a raw gas supply, a 3/4 inch line was installed at the inlet to the balancing regulator, Item 1, Figure 2. A pressure gage and gate valve were included in this line. For a gas pressure of 2 inches of water up to 1 pound per square inch, the pressure regulator included on the generator will operate correctly. A maximum gas pressure of 6-7 inches of water was available on the installed line.

A new thermocouple was required in the heating chamber due to the deteriorated condition of the original. A chromel-alumel couple was installed.

When all the external connections had been made, the pump was put into operation, forcing an air-gas mixture through the system with no heat

supplied to the reaction chamber. At this point, many leaks throughout the system were discovered. The exact locations of these leaks were located by introducing SO_2 in the system under pressure and testing for leaks with a wick wetted with ammonia. Various pieces of piping had to be replaced and joints had to be sealed with white lead. There was a considerable loss through the packing on the shafts of the mixing pump. This condition was corrected when this packing was replaced. Preliminary runs were made with no heating of the reaction chamber in order to determine the approximate operating conditions.

Before actually operating the generator, it was necessary to dry out the brickwork in the reaction chamber. This was accomplished by setting the temperature in the chamber at about 300°F for two hours and then raising the temperature 100° each hour until the operating temperature, 1900°F, was reached.

The Fisher Unitized Gas Analyzer described in Chapter IV and the necessary reagents were secured from the Engineering Experimental Station located in Berry Hall and placed in a convenient location near the sample port on the generator. The analyzer had not been used recently and new rubber expansion bags and sealing bands for use on the absorption pipettes had to be ordered.

With the generator and its auxiliaries installed, the unit was now ready to start up for the production of Endogas. The steps followed in starting up were as follows:

1. Power was applied to the heating element and the temperature allowed to reach 1900°F. The temperature must be at least 1900°F before any air-gas mixture is introduced to the retort

to avoid the danger of delayed ignition of a combustible mixture in the retort.

2. The cooling water was turned on.
3. If the unit had been connected to a furnace, the valve on the outlet side of the combustion unit would have been set so that the gases could have passed through the outside vent, rather than through the furnaces.
4. The gas pump was started with the gas valve, Item 24, Figure 2, closed and the mixture valve, Item 16, partly open.
5. The gas valve, Item 24, was opened to the wide open position. With the automatic carbon pressure control and the initial air to gas ratio adjustment completed as described in the preceding chapter, the readings on the air and gas Flo-Scopes corresponded to approximately the normal operating air to gas ratio.

With the retort heated and the air-gas mixture passing through the unit, the equipment was then producing Endogas. The combustion chamber was allowed to reach equilibrium before a sample was taken.

The above outlined procedure was carried out each time a sample was taken since not more than one sample was collected on a single day. This was due to the fact that not more than one gas analysis was made per day since several hours were required to carry out an analysis. From the time the current was applied to the combustion chamber heating elements, about four hours were required for the temperature to reach 1900°F; however, if the unit had been in operation on the previous day, about three hours were required to reach the reaction temperature.

After the operating conditions had become uniform, a sample of the product was taken. This sample was collected over a salt solution.

After the sample was taken, the unit was shut down, the following steps being taken:

1. Electric power to the combustion unit was shut off.
2. The gas pump was shut down.
3. The valve in the gas inlet was closed.
4. The cooling water supply was shut off.

If this atmosphere was being used in a furnace, the first step in this shut down procedure would have been to cut off the atmosphere supply to the furnace.

The samples collected were analyzed using the Orsat method. The analysis was made for the constituents CO_2, CO, H_2, O_2, CH_4 and N_2. Using the gas analyses a plot was made of air to gas ratio versus the percentage composition from which the air to gas ratio can be determined for a desired atmosphere (see Chapter VI). Also a material balance on the generator was made.

CHAPTER VI

DISCUSSION OF RESULTS

The most significant result of this investigation is the relation between the composition of the endothermic gas produced by the generator and the air-gas ratio of the feed.

The air-gas ratios investigated and their respective product gas analyses are shown in Table II in the Appendix. These data are represented in Figure 6 where the percentage composition of each constituent is plotted versus the air-gas ratio. Linear variation was assumed and a straight line was drawn for each constituent to best represent the data.

From Figure 6 it is seen that over the operating range of air to gas ratios, 2.4 to 4.5, the hydrogen content varies from 45% to 21%, the carbon monoxide varies from 22% to 15%, the carbon dioxide content varies from 0% to 2% and the methane content varies from 0.3% to 0%.

A plot similar to Figure 6 for a gas supply of specific gravity of 0.65, for which the generator was designed, is shown in Figure 7. At the air to gas ratio of 4.5, the data obtained experimentally is in excellent agreement with that from Figure 7. However, at the ratio 2.4 the values obtained experimentally are slightly larger for H_2 and CO, slightly less for CH_4 and the same for CO_2. This difference can be attributed to the fact that the properties of the raw gas used for this investigation differed from the properties of the gas for which Figure 7 was drawn. For example, the specific gravity of the gas utilized for this investigation was 0.5933 while that utilized for Figure 7 was 0.62.

The accuracy of the gas analysis is $\pm 0.05\%$ as determined by the volume measurements of the gas.

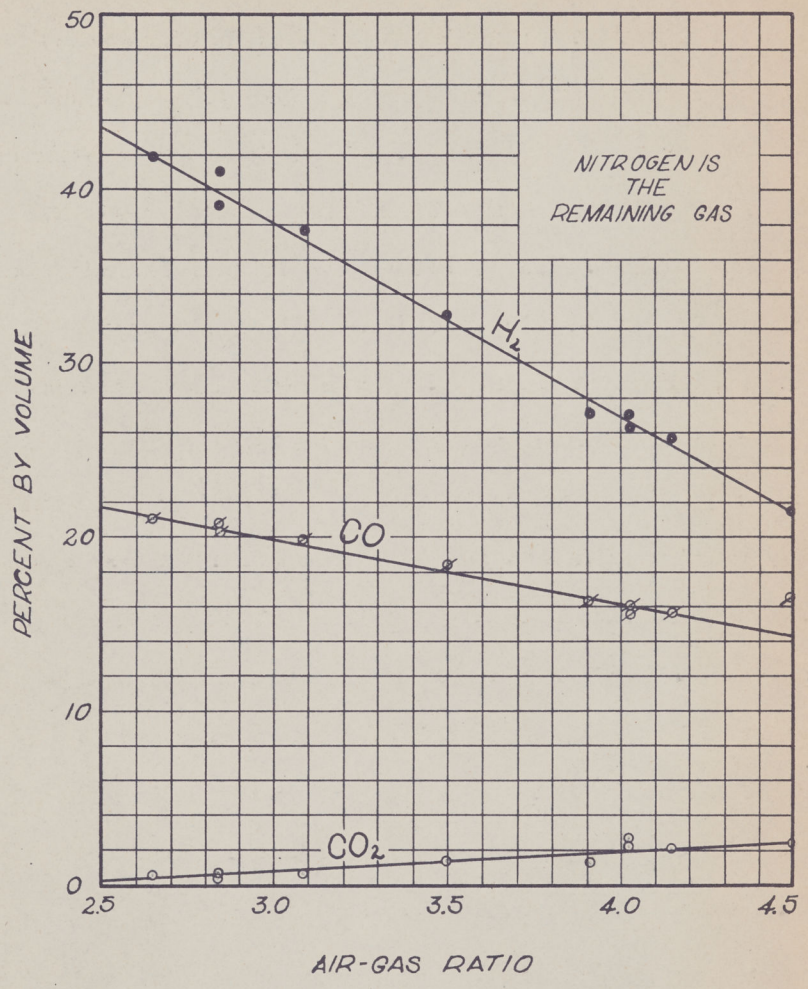

Figure 6. Composition-ratio graph from experimental data

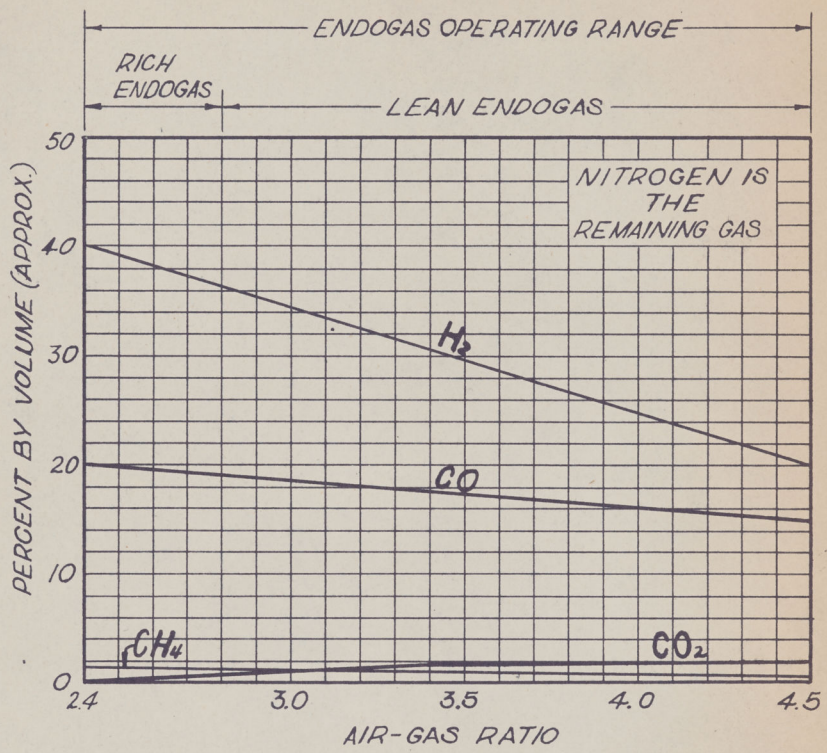

Figure 7. Endogas from natural gas. A copy of a graph in Reference 8

Material Balance

For any assumed air-fuel ratio the amount of each constituent entering the generator can be calculated and the expected effluent gas in equilibrium at each specified temperature can be computed.

Assume the fuel is pure methane and the generator is operating at an air-gas ratio of 3 to 1. The reaction in the generator is

$$CH_4 + 0.21(3)O_2 \rightleftharpoons aCO_2 + bCO + cH_2O + dH_2$$

A carbon balance yields

$$1 = a + b$$

A hydrogen balance yields

$$2 = c + d$$

An oxygen balance yields

$$(0.21)(3) = a + 0.5b + 0.5c$$

The equilibrium constant for the water gas reaction at 1900°F is

$$K = 0.53 = \frac{ad}{bc}$$

Solving these equations yield

$$a = 0.06$$
$$b = 0.94$$
$$c = 0.20$$
$$d = 1.80$$

where a, b, c and d are the number of moles of CO_2, CO, H_2O and H_2 respectively for one mole of methane and three moles of air.

The approximate output atmosphere factor, $f = \frac{\text{output atmosphere}}{\text{input air} + \text{input raw gas}}$, is

$$f = \frac{0.06 + 0.94 + 0.20 + 1.80 + 3(.79)}{3 + 1} = 1.34$$

This agrees approximately with the atmosphere factor 1.30 to 1.40 as given in the manufacturer's instruction booklet.(8)

If the water content of the exit gas from the generator is analyzed or the exit gas flow rate is measured, it is possible to evaluate a, b, c and d percentagewise. In the above material balance only relative values are shown since the exit flow rate from the generator was not known.

CHAPTER VII

CONCLUSIONS AND RECOMMENDATIONS

In conclusion the objectives of this investigation were attained in that the endothermic gas generator was installed, put into operation and produced an atmosphere from which sufficient data were collected to represent certain operation variables. These data are presented in Figure 6.

No investigation was made on the means of automatically controlling the product atmosphere because of insufficient time and equipment. Several methods of controlling were encountered in the literature survey and some of these methods were mentioned in the theoretical discussion.

The following recommendations are based on the fact that a more predictable atmosphere is required for the expanding application of controlled atmospheres in furnace treatment of metals. Fulfillment of these recommendations should be partial to the ultimate use of the product atmospheres.

1. The data obtained from this investigation should be confirmed in subsequent operation since no data were available from previous work on this particular installation with the available fuel supply.
2. A study of the gas flow characteristics should be made with emphasis on the metering devices, kinetics and pressure variation throughout the flow system.
3. An investigation of the combustion chamber or retort should be made concerning the effectiveness of the catalyst,

temperature distributions within the retort and the reactions taking place. This information is necessary to abet the prediction of the product atmosphere.

4. Other types of gas analyses should be investigated since the Orsat type is time consuming and instantaneous analyses may be used as a controlling device for extensive production.
5. Application of the product atmosphere should be made when feasible. The information gained from study of the materials being processed may be helpful in analyzing the atmosphere.
6. The properties of the feed gas should be investigated with respect to the product atmosphere. Other gases such as coke-oven gas, propane and butane may be used to produce atmospheres similar to that produced from natural gas.
7. A cost analysis should be made utilizing local rates.
8. Additional safety devices should be installed in accordance with the manufacturer's specifications, as indicated in Reference 8, before continuous operation is attempted. These specifications were not strictly followed since the equipment was used periodically and an attendant was present at all times during operation.
9. The equipment should be thoroughly inspected and cleaned. Since it was assumed that the equipment was in satisfactory operating condition, no extensive inspection was made with this investigation.

REFERENCES AND BIBLIOGRAPHY

LIST OF REFERENCES

1. Cullen, O. E., "Controlled Atmospheres - Their Generation and Utilization," Metal Progress, 101-106, December 1953

2. Hotchkiss, A. G., "Theory of Gas Atmospheres," Metal Progress, 81-85, November 1954

3. Ipsen, H. N. and Rupert, E. J., "Automatic Carbon Control," Metal Progress, 98-102, July 1954

4. Perrine, R. J., "Endothermic Atmospheres," Metal Progress, 89-93, November 1954

5. Schnidman, L., ed., Gaseous Fuels, American Gas Association, New York, 1948

6. Boyd, J. P., letter, January 17, 1958

7. "Westinghouse Heat-Treating Atmospheres," Westinghouse Electric and Manufacturing Co., East Pittsburgh, Pennsylvania

8. Westinghouse Instruction Pamphlet, Westinghouse Electric Corporation, Meadville, Pennsylvania

BIBLIOGRAPHY

1. Beggs, D., "Dry Nitrogen as a Base for Prepared Atmospheres," Metal Progress, 98-99, November 1954

2. Besselmon, W. L., "Atmosphere Analysis and Control," Metal Progress, 102-105, November 1954

3. Cullen, O. E., "Dew Point Control in Practice," Metal Progress, 114-118, November 1954

4. Cullen, O. E., "Selection and Application of Furnace Atmospheres for Quality Control," Industrial Heating, 465-474, March 1957

5. Gurry, R. W., "Composition of Atmospheres Inert to Heated Carbon Steel," Journal of Metals, 188, 671-687, April 1950

6. Harris, F. E., "Atmosphere Applications - Equipment, Methods and Process Cycles," Metal Progress, 713-723, April 1945

7. Harris, F. E., "Atmospheres for the Heat Treatment of Steels," Metal Progress, 175-178, August 1948

8. Harris, F. E., "Reactions Between Hot Steel and Furnace Atmospheres," Metal Progress, 84-89, January 1945

9. Hawkins, G. A. and Smith, J. M., "Equilibrium Constants for Seventeen Gas Reactions," Engineering Bulletin, Purdue University, 108, May 1949

10. Holcroft, W. H., "Control of Exothermic and Endothermic Converters," Industrial Heating, 24, 676-688, April 1957

11. Holcroft, W. H., "Elements of Gas Carburizing," Metal Progress, 106-109, November 1954

12. Holcroft, W. H. and Harris, R. P., "Nitrogen as a Carrier Gas in Gas Carburizing," Metal Progress, 241-246, February 1948

13. Hotchkiss, A. G. and Webber, H. M., Protective Atmospheres, John Wiley & Sons, Inc., New York, 1953

14. Ipsen, H. N., "Automatic Ratio Control for Endothermic Gas Generators," Metal Progress, 107-110, August 1956

15. Koebel, N. K., "Dew Point - A Means of Measuring the Carbon Potential of Prepared Atmospheres," Metal Progress, 90-96, February 1954

16. Koebel, N. K., "Equilibrium Relationships for Dew Point Control," Metal Progress, 110-114, November 1954

17. Peck, C. E., "Application of Controlled Atmospheres to Heat Treating," Metal Progress, 814-818, June 1942

18. Schwalm, D. J., "Control of Controlled Atmospheres," Metal Progress, 99-102, July 1956

19. Controlled Atmospheres, American Society for Metals, Cleveland, Ohio, 1942

APPENDIX

TABLE I

SCHEDULE OF OPERATION

Date	Power Applied At	Gas Applied At	Air-Gas Ratio	Sample No.	Sample Taken At	Air-Gas Ratio	Shut-Down At
2/4/58	9:00 AM	2:10 PM	4.40	1	3:30 PM	4.50	4:15 PM
2/4/58	9:00 AM	2:10 PM	4.40	2	4:15 PM	4.65	4:15 PM
2/5/58	10:00 AM	2:50 PM	3.92	3	3:50 PM	3.92	3:55 PM
2/6/58	9:00 AM	12:45 PM	3.09	4	4:00 PM	2.87	4:00 PM
2/10/58	10:55 AM	3:15 PM	2.94	5	4:05 PM	3.08	4:10 PM
2/11/58	9:00 AM	12:15 PM	2.78	6	1:50 PM	2.84	1:50 PM
2/12/58	10:00 AM	2:00 PM	2.57	7	4:15 PM	2.65	4:15 PM
2/13/58	9:00 AM	12:00 noon	3.93	8	1:00 PM	4.02	3:05 PM
2/13/58	9:00 AM	12:00 noon	3.93	9	3:00 PM	4.02	3:05 PM
2/15/58	9:00 AM	12:40 PM	2.79	10	1:40 PM	2.84	1:40 PM
2/18/58	9:00 AM	12:55 PM	3.43	11	2:30 PM	3.50	2:30 PM
2/19/58	10:00 AM	2:15 PM	4.35	12	4:00 PM	4.15	4:15 PM
2/20/58	9:00 AM	12:35 PM	4.08	13	1:15 PM	4.46	3:15 PM
2/20/58	9:00 AM	12:35 PM	4.08	14	3:10 PM	4.51	3:15 PM
2/21/58	11:00 AM	2:05 PM	3.28	15	4:30 PM	3.31	4:35 PM
3/21/58	8:45 AM	1:30 PM	4.10	16	2:15 PM	4.10	2:15 PM
3/24/58	8:45 AM	2:25 PM	3.46	17	3:30 PM	3.46	3:30 PM
3/27/58	8:45 AM	2:00 PM	3.04	18	3:00 PM	3.10	3:00 PM
3/28/58	8:45 AM	3:30 PM	3.27	19	4:05 PM	3.27	4:10 PM

TABLE II

GAS ANALYSIS REPORTS

Sample Number	Air-Gas Ratio	Per Cent by Volume				
		CO_2	CO	H_2	CH_4	N_2
1	4.50	2.36	13.15	-	-	-
2	-	-	-	-	-	-
3	3.91	1.34	16.32	27.05	-	-
4	2.87	0.70	18.80	34.60	-	-
5	3.08	0.81	19.96	37.70	-	41.50
6	2.84	0.51	20.93	39.00	-	-
7	2.65	0.50	21.00	41.80	0.2	36.50
8	4.02	2.36	15.88	26.34	0.0	55.42
9	4.02	2.40	16.10	27.10	0.0	54.40
10	2.85	0.20	20.50	41.00	0.1	38.20
11	3.50	0.72	18.43	32.95	0.3	47.59
12	4.15	2.11	15.80	25.82	1.5	55.30
13	4.46	1.92	15.02	27.32	1.0	54.80
14	4.50	2.48	16.73	21.40	-	-
15	-	-	-	-	-	-
16	4.10	0.80	17.35	31.00	-	-
17	3.46	0.00	19.45	-	-	-
18	3.09	0.00	20.74	41.30	0.3	37.70

Note: The first six analyses were incomplete because the authors were becoming familiarized with the gas analysis apparatus. The apparatus developed a leak so that analyses 14 through 18 are incomplete.

TABLE III

NATURAL GAS ANALYSIS

Components	Mole Fraction	Specific Gravity
CH_4	0.9431	0.5234
C_2H_6	0.0339	0.0355
CO_2	0.0068	0.0104
N_2	0.0048	0.0046
propane	0.0079	0.0122
isobutane	0.0019	0.0039
n-butane	0.0016	0.0032

Note: The gas included traces of isopentane, n-pentane, hexane and heptane. The heat content of the gas was 1047 Btu/ft.^{3} dry and 1029 Btu/ft.^{3} wet. The sample was taken at a pressure of 14.73 psia and a temperature of 60°F. The analysis was obtained through a telephone conversation with Mr. Kelly of the Knoxville Utilities Board, Knoxville, Tennessee, on February 6, 1958. This is a quarterly analysis made in Houston, Texas.

TABLE IV

GAS ATMOSPHERE DATA FOR NATURAL GAS[8]

Type of Endogas Atmosphere	CFH Raw Gas / 1000 CFH of Atmosphere Processed	Approximate Air to Gas Ratio	f= Output Atmosphere / Input Air Plus Input Raw Gas
Lean	172	3.5 to 1	1.30
Rich	210	2.4 to 1	1.40

TABLE V

RATINGS AND DIMENSIONS OF THE GENERATOR[8]

Size	250 CFH
Electrical	
Kw	6
Volts	110
Phase	1
Dimensions	
Width	3 ft. 6 in.
Height	4 ft. 8 in.
Length	6 ft. 3 in.
Total over-all height (including space to remove retort)	7 ft. 11 in.
Gas pump motor	1 HP
Cooling water consumption	25-30 gals./ hour, approx.
Raw gas consumption (1000 Btu gas at air-gas ratio = 2.5/1)	50-60 $ft.^3$/hour, approx.
Power consumption	11.0 Kwh/hour
Shipping weight (bare unit)	2000 lbs.

TABLE VI

COMPOSITION AND COST OF A TYPICAL ENDOTHERMIC ATMOSPHERE

Description	Completely reacted fuel (auxiliary heat needed)
Air-gas ratio	2.75/1
N_2 (% by volume)	41.7%
H_2	38.0%
CO	19.0%
CO_2	0.0%
CH_4	1.3%
O_2	0.0%
Dew point	-10°F
Gas for 1000 ft.^{3} of atmosphere	200 ft.^{3}
Cost per atmosphere	\$0.18 to \$0.25*
Nature of atmosphere	Combustible, toxic, most reducing

*Costs figured on raw natural gas at \$0.50 per 1000 ft.^{3}, electricity at \$0.01 per Kwh, water at \$0.05 per 1000 gallons. Use of city gas usually doubles the cost figures given.(7)