To the Graduate Council:

I am submitting herewith a thesis written by Joel D. Jungemann entitled "Developing a Case for an Improved Aircraft Carrier Visual Landing Aid for Glideslope Control." I have examined the final copy of this thesis for form and content and recommend that it be accepted in partial fulfillment of the requirements for the degree of Master of Science, with a major in Aviation Systems.

R.B. Richards, Major Professor

We have read this thesis
and recommend its acceptance:

F.G. Collins

U.P. Solies

Accepted for the Council:

Associate Vice Chancellor and
Dean of The Graduate School

Developing a Case for an Improved Aircraft Carrier Visual Landing Aid for Glideslope Control

A Thesis
Presented for the
Master of Science
Degree
The University of Tennessee, Knoxville

Joel D. Jungemann
May 2000

DISCLAIMER

The analyses, opinions, conclusions and recommendations expressed herein are those of the author and do not represent the official position of the Naval Air Warfare Center, the Naval Air Systems Command, or the United States Department of the Navy. The author's recommendations should not be considered attributable to any of the aforementioned authorities or for any purpose other than fulfillment of the thesis requirements.

DEDICATION

This thesis is dedicated to my wife

Mrs. Susan A. Jungemann

for her unending love and support

and to my parents

Dr. John D. Jungemann, PhD

and

Mrs. Jacqueline S. Jungemann

for encouraging me to work hard and pursue my goals.

ACKNOWLEDGEMENTS

Many people played instrumental roles during the research and writing of this thesis. I am truly indebted to my advisor, Professor Richards, for his patience and review of this document from the beginning. The thesis committee, Dr. Collins and Dr. Solies, also contributed much and I am grateful for their time and efforts.

A special word of thanks goes to Mr. Bob Richards and Mrs. Sharon Kane from the UTSI campus at Naval Air Station Patuxent River, Maryland. Their guidance and advice were much appreciated over the last year and a half. I also genuinely appreciate all the advice, ideas, and camaraderie provided by my UTSI classmates at Patuxent River.

Finally, an enormous debt is owed to my wife, Susan. Without her encouragement and confidence, I would never have completed this program.

ABSTRACT

Landing a fixed-wing aircraft on board an aircraft carrier, while performed numerous times around the world each day, is considered by many to be one of the most difficult tasks in modern-day aviation. The aircraft carrier landing area is significantly smaller than a standard runway and is normally moving away from the approaching aircraft. When the carrier experiences adverse weather or sea states, the landing area frequently translates not only horizontally and vertically, but also in combinations of the two, producing movements not experienced on a normal airfield runway.

The task of a carrier pilot is to fly an approach precise enough to have the aircraft's arresting hook touch down within a 40 foot long section of flight deck in-between the second and third of four arresting wires. The first naval aviators were expected to use their own judgement to execute a successful approach. Shortly thereafter, a Landing Signals Officer (LSO), who was also an experienced carrier pilot, was placed on the flight deck with a highly visible set of paddles to help guide the approaching pilot to the appropriate touchdown point. In time, an optical landing system consisting of a mirror and light source was developed to assist the pilots in flying the proper glideslope during carrier approaches. This mirror system was eventually replaced by an apparatus consisting of five Fresnel lens assemblies stacked vertically along with a set of six lights extending horizontally from each side to be used as datums. This Fresnel Lens Optical Landing System (FLOLS) is the current landing aid in use on every U.S. aircraft carrier in service today.

The FLOLS, although reliable, consists of 1950's and 60's technology. It has limited capability to compensate for the carrier's movement and is becoming

increasingly more expensive to maintain and operate. A new landing aid, the Improved Fresnel Lens Optical Landing System (IFLOLS) has been developed and has recently been approved for installation on all fleet aircraft carriers and several Naval Air Stations. The IFLOLS provides much improved sensitivity and clarity to pilots, greater capability to compensate for ship's movement, and increased maintainability and reliability as compared to the FLOLS.

This thesis will examine the procedures used by aircraft to operate around the aircraft carrier, the history of Visual Approach Aids (VLA's), problems associated with the FLOLS, and the suitability of the IFLOLS to replace the FLOLS as the primary carrier visual landing aid. IFLOLS data will come primarily from technical reports generated during a lengthy evaluation conducted from September of 1996 through April of 1998 by the Naval Air Warfare Center Aircraft Division (NAWCAD). The IFLOLS evaluation was completed prior to the author's arrival at NAWCAD. The research performed was purely historical and the author played no part in either the evaluation or acquisition process of the IFLOLS.

TABLE OF CONTENTS

CHAPTER 1 1
INTRODUCTION 1
OVERVIEW 1
STATEMENT OF THE PROBLEM 1
OBJECTIVE OF THE STUDY 2
CHAPTER 2 3
BACKGROUND 3
THE CARRIER APPROACH 3
Case I 3
Case III 6
Case II 6
On The Ball 7
APPROACH GEOMETRY 9
Basic Angle 9
Hook-to-Ramp (H/R) Clearance 11
Hook Touch Down Point (HTDP) 11
Hook-to-Eye (H/E) Value 12
SHIP MOTION 15
Center of Gravity (CG) 17
Center of Rotation (CR) 17
Ship's Trim 17
Pitch 20
Roll 21
Yaw 25
Heave 25
THE LANDING SIGNAL OFFICER (LSO) 26
MIRROR OPTICAL LANDING SYSTEM (MOLS) 27
FRESNEL LENS OPTICAL LANDING SYSTEM (FLOLS) 32
Description 33
Optical Characteristics 34
Operation 37
Roll Angle vs H/E 39
Stabilization 40
Limitations of the System 45
CHAPTER 3 48
IFLOLS DESCRIPTION 48
GENERAL 48
LENS SYSTEM 49
STABILIZATION 51
STABILIZATION DESIGN CRITERIA 53
RELIABILITY/MAINTAINABILITY 54
Minimum Visual Glideslope Display Range 54
Mean Time To Repair 54

Operational Availability 55
System Mean Time Between Mission Critical Failure 56
Built-In-Test (BIT) Capability 56
CHAPTER 4 58
IFLOLS EVALUATION 58
GENERAL 58
DT-IIA 60
Methodology 60
Results 61
Conclusions 66
DT-IIB/TECHEVAL 66
Methodology 66
Results 66
Conclusions 68
OT-IIA 69
Methodology 69
Results 69
Conclusions 69
OT-IIB/OPEVAL 70
Methodology 70
Results 70
Conclusions 71
POST OPEVAL 71
Methodology 71
Results 72
Conclusions 72
STABILIZATION DESIGN CRITERIA 73
Methodology 73
Results 73
Conclusions 73
MAINTAINABILITY/RELIABILITY 74
Methodology 74
Results 74
Conclusions 75
CHAPTER 5 77
DISCUSSION 77
IFLOLS IMPROVEMENTS OVER FLOLS 77
COMMERCIAL VLA'S 78
COUPLED APPROACHES 80
CHAPTER 6 82
CONCLUSIONS 82
BIBLIOGRAPHY 84
APPENDIX 87
VITA 92

LIST OF FIGURES

Figure 1: CASE I PATTERN 4

Figure 2: CASE III APPROACH AND PATTERN 7

Figure 3: ANGLE OF ATTACK INDEXERS 8

Figure 4: CARRIER APPROACH GEOMETRY 13

Figure 5: AIRCRAFT HOOK TO EYE (H/E) VALUE 14

Figure 6: CENTER OF ROTATION (CR) 18

Figure 7: COMPENSATION FOR PITCH STATIC MISTRIM 19

Figure 8: LATERAL DISPLACEMENT OF THE FLIGHT DECK DUE TO ROLLING MOTION 22

Figure 9: FLIGHT DECK DISPLACEMENT DUE TO ROLLING MOTION 24

Figure 10: EFFECT ON CENTERLINE GLIDESLOPE GEOMETRY FROM A LEFT ROLL 24

Figure 11: LANDING SIGNAL OFFICER SIGNALS 28

Figure 12: LANDING SIGNAL OFFICER REFLECTIVE JUMPSUIT 29

Figure 13: MOLS GLIDESLOPE PRESENTATION 30

Figure 14: MIRROR OPTICAL LANDING SYSTEM 30

Figure 15: LSO PICKLE SWITCH 31

Figure 16: FRESNEL LENS OPTICAL LANDING SYSTEM DECK EDGE UNIT .. 33

Figure 17: PLANO-CONVEX LENS/FRESNEL LENS DESIGN COMPARISON 34

Figure 18: PLANO-CONVEX LENS/FRESNEL LENS OPTICAL COMPARISON .. 36

Figure 19: LENTICULAR LENS 36

Figure 20: FLOLS VERTICAL FIELD ANGLE 37

Figure 21: FLOLS AZIMUTHAL RANGE 38
Figure 22: DETERMINATION OF BASIC ANGLE 22
Figure 23: EFFECTS OF ROLL ANGLE CHANGE ON LIGHT PLANE 41
Figure 24: VARYING H/E VALUES FLOWN TO CONSTANT HTDP 41
Figure 25: CHARACTERISTICS OF A POINT-STABILIZED LIGHT PLANE 42
Figure 26: DISPLACEMENT OF LIGHT SOURCE DURING POINT MODE OPERATION 43
Figure 27: LINE MODE OF FLOLS STABILIZATION 43
Figure 28: IFLOLS DECK EDGE ASSEMBLY 28
Figure 29: IFLOLS SIMPLIFIED OPTICS SYSTEM DIAGRAM 50
Figure 30: SIMPLIFIED IFLOLS STABILIZATION MECHANICS DIAGRAM 30
Figure 31: PROTOTYPE LAND-BASED IFLOLS UNIT 59
Figure 32: PROTOTYPE SHIPBOARD COMPATIBLE IFLOLS UNIT 59
Figure 33: IFLOLS CUT LIGHT CONFIGURATION 1 63
Figure 34: IFLOLS CUT LIGHT CONFIGURATION 2 & 3 63
Figure 35: IFLOLS CUT LIGHT CONFIGURATION 4 67
Figure 36: VISUAL APPROACH SLOPE INDICATOR (VASI) 79
Figure 37: PRECISION APPROACH PATH INDICATOR (PAPI) 79

LIST OF TABLES

Table 1: Hook to Ramp Clearance vs. Aircraft Carrier..... 11

Table 2: Aircraft Hook to Eye Values (H/E) in the Normal Landing Configuration..... 16

Table 3: Basic angle vs. Hook Touch Down Constant..... 26

Table 4: Vertical Beam Height vs. Distance Aft of Virtual Image Point..... 38

Table 5: MK6 MOD3 FLOLS Stabilization Limits..... 44

Table 6: IFLOLS Stabilization Limits..... 54

Table 7: IFLOLS Stabilization Accuracy..... 55

Table 8: Pilot Questionnaire Rating Scale..... 60

Table 9: OT-IIB/OPEVAL Quantitative Test Results..... 76

Appendix Table 1: Sea State Definitions..... 88

Appendix Table 2: Procedures Used in IFLOLS Mean Time to Repair Demonstration.. 91

LIST OF ABBREVIATIONS AND NOMENCLATURE

AGL	Above Ground Level
AN/SPN-41	Non-Radar Instrument Landing System
AN/SPN-42/6	Radar Instrument Landing System
AOA/α	Angle of Attack
A_o	Operational Availability
B_I	Number of Incorrect BIT Failure Indications
BIT	Built-In-Test
B_T	Total Number of BIT Failure Indications
Bolter	an arrested landing attempt in which the aircraft does not arrest
CDP	Cross Deck Pendant
CG	Center of Gravity
CLASS	Carrier Landing Aid Stabilization System
CR	Center of Rotation
CV	Class designation for conventionally powered aircraft carriers (CV-62)
CVN	Class designation for nuclear powered aircraft carriers (CVN-73)
CVW	Carrier Air Wing (CVW-1)
D	Downtime
DAS	Data Acquisition System
DC	direct current
deg/°	degree
DT	Developmental Test
ELA	Electronic Landing Aids

EMI	Electro Magnetic Interference
F	Faults
F_{CD}	Total Number of Failures Correctly Detected by BIT
FCLP	Field Carrier Landing Practice
F_{COR}	Software Faults Correctly Detected by BIT
F_{DET}	Fault Detection
F_{FAR}	False Removal Rate
F_I	Fault Isolation
F_{ISO}	Number of Failures Correctly Isolated
FLOLS	Fresnel Lens Optical Landing System
F_{MC}	Number of Mission Critical Failures
fpm	Feet Per Minute
ft	feet
H/E, d_{HE}	Hook-to-Eye Value
H/R	Hook-to-Ramp Clearance
hr	hour
HTDC	Hook Touch Down Constant
HTDP	Hook Touch Down Point
IFLOLS	Improved Fresnel Lens Optical Landing System
KIAS	Knots Indicated Airspeed
LSO	Landing Signal Officer
Meatball	Image on MOLS, FLOLS, and IFLOLS depicting aircraft's glideslope
MK-19	Aircraft Carrier Gyro

Mod	Modification
Mode I	A fully automatic carrier approach and arrestment
MOLS	Mirror Optical Landing System
$MTBMCF_{SYS}$	System Mean Time Between Mission Critical Failure
MTTR	Mean Time To Repair
N	Number of Failures
N_{ACT}	Number of Actual System Failures
NALF	Naval Auxiliary Landing Field
NAS	Naval Air Station
NATOPS	Naval Air Training and Operating Standardization Procedures
NAWCAD	Naval Air Warfare Center Aircraft Division
NM	Nautical Miles
NORDO	No Radio
OPEVAL	Operational Evaluation
ORD	Operational Requirements Document
OT	Operational Test
PAPI	Precision Approach Path Indicator
Phi/ϕ	Basic Glideslope Angle
Ramp	The curved, furthest aft portion of the flight deck landing area
ROD	Rate of Descent
Sea State	A measure of sea surface condition
SINS	Ship's Inertial Navigation System

SOT	Stabilized Optics Table
TECHEVAL	Technical Evaluation
TEMP	Test and Evaluation Master Plan
T_{OH}	Total Operating Hours
T_{SYS}	System Mean Time Between Mission Critical Failure
VASI	Visual Approach Slope Indicator
VLA	Visual Landing Aid
WRA	Weapons Replaceable Assembly
Zip Lip	Carrier operations without use of radios

CHAPTER 1

INTRODUCTION

OVERVIEW

Landing a fixed-wing aircraft on board an aircraft carrier, while performed numerous times around the world each day, is considered by many to be one of the most difficult tasks in modern-day aviation. The aircraft carrier landing area is significantly smaller than a standard runway and is normally moving away from the approaching aircraft. When the carrier experiences adverse weather or sea states, the landing area frequently translates not only horizontally and vertically, but also in combinations of the two, producing movements not experienced on a normal airfield runway.

STATEMENT OF THE PROBLEM

The task of a carrier pilot is to fly an approach precise enough to have the aircraft's arresting hook touch down within a 40 foot long section of flight deck in-between the second and third of four arresting wires. The first naval aviators were expected to use their own judgement to execute a successful approach. Shortly thereafter, a Landing Signal Officer (LSO), who was also an experienced carrier pilot, was placed on the flight deck with a highly visible set of paddles to help guide approaching pilots to the appropriate touchdown point. In time, an optical landing system consisting of a mirror and light source was developed to assist the pilots in flying the proper glideslope during carrier approaches. This mirror system was eventually replaced by an apparatus known as the Fresnel Lens Optical Landing System (FLOLS). It consists of five Fresnel lens assemblies stacked vertically along with a set of six lights

extending horizontally from each side to be used as datums. The FLOLS is the current landing aid in use on every U S. aircraft carrier in service today.

The FLOLS, although reliable, consists of 1950's technology. It has poor sensitivity until relatively close to the carrier and is also becoming increasingly more expensive to maintain and operate. A new landing aid, the Improved Fresnel Lens Optical Landing System (IFLOLS) has been developed and has recently been approved for installation on all fleet aircraft carriers and several Naval Air Stations. The IFLOLS provides much improved visibility and clarity to pilots, greater capability to compensate for ship's movement, and increased maintainability and reliability as compared to the FLOLS.

OBJECTIVE OF THE STUDY

This thesis will examine the procedures used by aircraft to operate around the aircraft carrier, the history of Visual Approach Aids (VLA's), problems associated with the FLOLS, and the suitability of the IFLOLS to replace the FLOLS as the primary carrier visual landing aid. IFLOLS data will come primarily from technical reports generated during a lengthy evaluation conducted from September of 1996 through April of 1998 by the Naval Air Warfare Center Aircraft Division (NAWCAD). The IFLOLS evaluation was completed prior to the author's arrival at NAWCAD. The research performed was purely historical and the author played no part in either the evaluation or acquisition process of the IFLOLS.

CHAPTER 2

BACKGROUND

THE CARRIER APPROACH

The United State's fleet of aircraft carriers operates year-round, in waters spanning the globe. In order to perform its mission, the carrier must be able to launch and recover aircraft day and night, in all sorts of weather conditions. In order to successfully launch an aircraft, the pilot simply needs to taxi to the catapult, wait for the deck crew to ensure the aircraft is correctly connected, select the appropriate power setting, and let the catapult do the rest. Simplistically speaking, the pilot is "along for the ride." Successfully recovering the aircraft back aboard the carrier, however, is an entirely different matter. With the exception of a fully coupled approach, where the aircraft is flown all the way to touchdown by computers aboard the carrier, the pilot is solely responsible for placing his aircraft at the proper position and attitude to successfully engage one of four arresting gear wires. The manner in which aircraft approach the carrier in preparation for landing is dependent on whether it is day or night, and the prevailing ceilings and visibility around the ship.

Case I

Daytime approaches during periods of good weather are conducted during what is termed "Case I Operations." All fixed-wing aircraft due to recover at a specific time orbit overhead the carrier within a five-mile radius. Altitudes are pre-determined depending on aircraft type, and pilots are responsible for maintaining visual separation from other aircraft. The pilots orbiting at the lowest altitude plan their approach to arrive as soon as the carrier is finished launching the next cycle of aircraft. This process is

referred to as "hawking the deck." Pilots descend in order to arrive wings-level at an "Initial" point, which is defined as 3 miles behind the carrier at an altitude of 800 ft above ground level (AGL.) The Case I pattern beginning at the initial is presented in figure 1.

Pilots maintain 800 ft AGL and fly up the carrier's final bearing at speeds from 300 to 450 Knots Indicated Airspeed (KIAS) depending on aircraft type. At a point between the stern of the carrier and 4 miles upwind, the pilot performs a level, left-hand "break". This is an energy-dissipating maneuver designed to align the aircraft 180 degrees out from the carrier's final bearing (called the "downwind") while allowing it to decelerate enough to lower the landing gear and high-lift devices (flaps and slats.) The first aircraft down will generally break overhead the carrier, while subsequent aircraft will plan their breaks to establish a 45 to 60 second interval behind the aircraft in front of them.

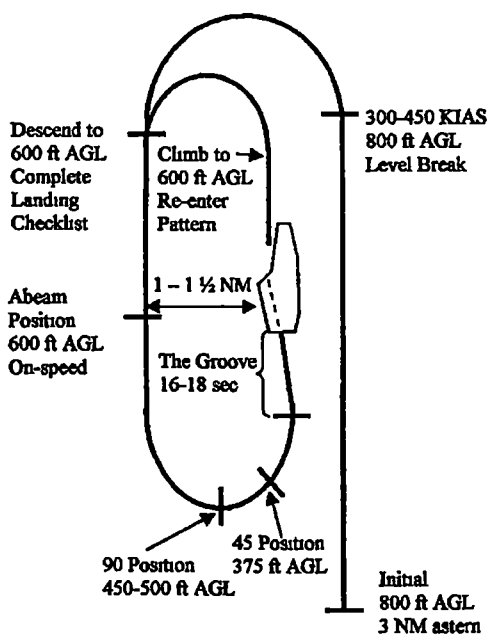

Figure 1
CASE I PATTERN

Once established wings level on downwind, the pilot descends to 600 ft AGL and aims for the "abeam" position. This position is in line with the Landing Signal Officer (LSO) platform, located on the port side of the ship, and varies from 1 to 1 ½ miles depending on type of aircraft. Prior to reaching the abeam position, the pilot will complete a landing checklist to ensure landing gear, flaps, slats, hook, and speedbrakes are in the proper position. Fuel weight will also be checked to ensure the aircraft is below the maximum allowable gross weight to safely arrest on the carrier. Finally, the pilot will crosscheck his angle-of-attack (AOA) with his airspeed, to ensure the aircraft is flying at the correct attitude for the approach. This condition is referred to as flying "on-speed", and the pilot strives to maintain this throughout the approach.

At the abeam position, the pilot commences a 25 to 30 deg left-hand turn and begins a 100 to 200 feet-per-minute (fpm) rate of descent (ROD). The goal is to arrive at the "90" position (90 deg of turn left) at 450 to 500 feet AGL while maintaining an on-speed condition. The turn from the abeam to the 90 position is performed as an instrument-only turn, with no reference to the position of the carrier. After reaching the 90, the pilot increases his rate-of-descent (ROD) to 400 to 500 fpm and begins an inside-outside scan to include the carrier. The next point is the 45 (45 deg of turn remaining), and the pilot attempts to reach this point at 375 ft AGL. The turn to final is complete as the pilot rolls out on carrier centerline at 325 ft AGL with 600 to 700 fpm ROD. The portion of the approach remaining is referred to as "the groove" and will ideally take 16 to 18 sec from rolling wings-level until reaching the carrier deck.

Case III

During night operations and day operations with ceilings less than 800 ft AGL, recoveries are conducted using Case III operations. Recovering aircraft hold on a certain bearing from the carrier, utilizing different altitudes and ranges from 15 to 40 miles. This holding pattern is referred to as the "Marshall Stack." Aircraft depart marshall at 1-minute intervals and fly a standard instrument procedure which culminates in a 10-mile straight-in approach to the carrier. Aircraft descend to and maintain 1200 ft AGL and transition to the landing configuration at 10 miles. Landing checks are performed and the pilot slows to on-speed at 6 miles.

The carrier is equipped with 2 precision approach and landing systems to guide pilots. The first is a radar system (AN/SPN-42 or AN/SPN-46) which tracks the aircraft and sends corrections in the form of a needles display to correct back to glideslope and centerline. The second is an Instrument Landing System (AN/SPN-41) which presents the same needles approach to the pilot, but is simply two beams (one horizontal and one vertical) projected aft of the carrier which the aircraft flies through. The pilot uses one or both of these systems to track his lineup from 10 miles in and begins a 600-700 fpm descent to maintain the proper glideslope at 3 miles. At ¾ of a mile, the pilot transitions from the instrument systems to a visual approach, which mirrors "the groove" portion of the Case I pattern. The Case III approach and pattern is depicted in figure 2.

Case II

Day time operations in which ceilings and visibility don't permit Case I operations, but aren't bad enough for Case III, utilize a combination of the two, referred

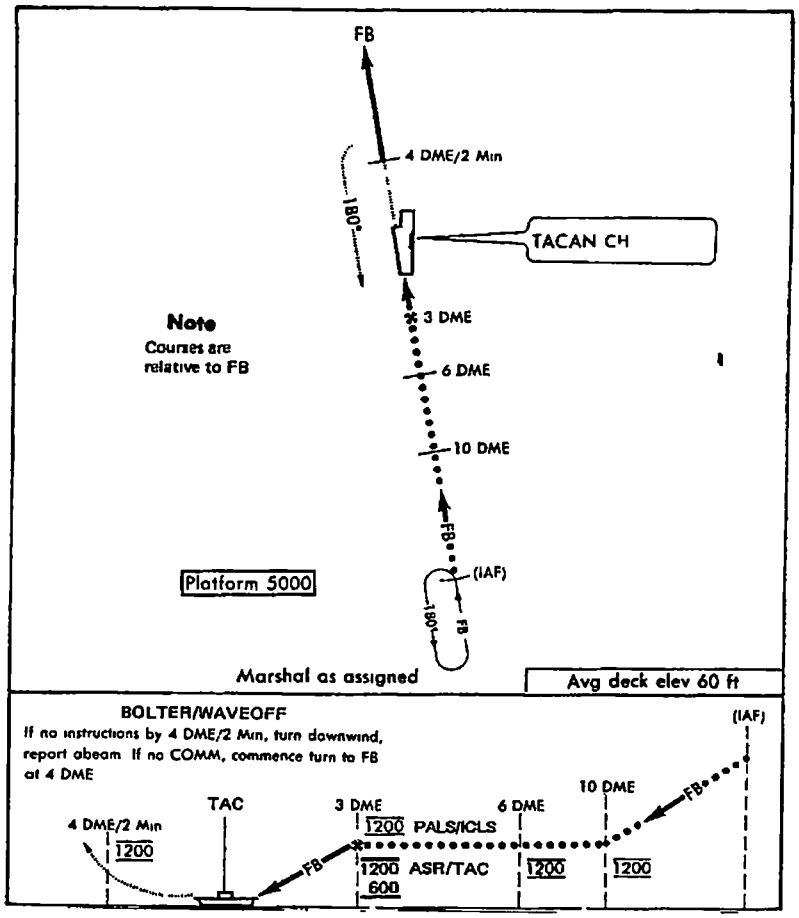

Figure 2
CASE III APPROACH AND PATTERN

Source: " CV NATOPS Manual", Washington, D.C., Chief of Naval Operations, 01 Oct 1997, (NAVAIR 00-80T-105).

to as Case II. Aircraft hold, usually in flights of two, in marshall and commence the approach as in the Case III pattern. Once the flight has descended below the weather and has the carrier in sight, the instrument procedure is discontinued and the aircraft proceed to the initial and enter the Case I pattern.

On The Ball

The end result of Case I, II, or III approaches is to place the aircraft at ½ to ¾ of a mile, on centerline, on glideslope, and on-speed. From this point, the pilot attempts to

maintain the proper glideslope, lineup, and attitude to safely engage one of four arresting gear wires stretched along the flight deck. To maintain an on-speed condition, the pilot has an AOA gauge in the cockpit, along with a set of colored AOA indexers mounted in the lower portion of his windscreen. The indexers, shown in figure 3, display an amber doughnut if the aircraft is on-speed, a green chevron pointing down (nose needs to go down) if the aircraft is slow, and a red chevron pointing up (nose needs to go up) if fast. To maintain the aircraft on the centerline of the landing area, the pilot scans the upper or far portion of the landing centerline and the horizontal end-line. These form a "T" and provide the quickest means of detecting line-up deviations. For glideslope maintenance, the pilot utilizes the Fresnel Lens Optical Landing System (FLOLS). The FLOLS displays a movable source of light, or "meatball", which when compared to a fixed set of

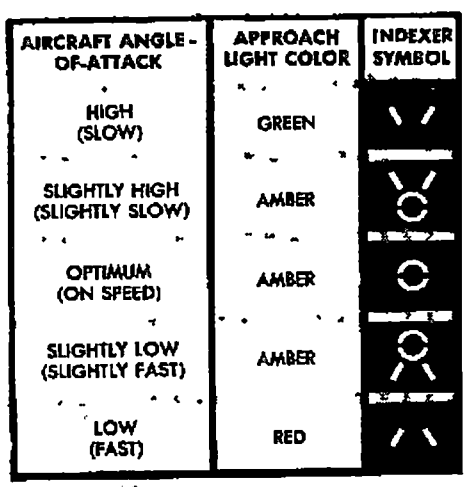

Figure 3
ANGLE OF ATTACK INDEXERS

Source: "NATOPS Flight Manual Navy Model EA-6B Aircraft", Washington, D.C., Chief of Naval Operations, 15 Jul 1997, (NAVAIR 01-85ADC-1).

horizontal lights, or "datums", indicates the aircraft's position in relation to the proper glideslope. The pilot's scan, taught all carrier aviators from day one, is "meatball, lineup, AOA." As the pilot is scanning, he is making small power, attitude, and lineup corrections throughout the approach. With a steady flight deck, an aircraft that touches down on centerline, on-speed, with a centered ball, will have it's hook hit the same spot on the flight deck every time.

Upon touchdown, the pilot immediately advances the throttles to maximum thrust. This is done in order to maintain adequate flying speed should the aircraft miss the arresting wires or the hook fail, termed a "bolter." An aircraft that bolters during Case I or II operations climbs to 600 ft AGL and re-enters the Case I pattern. Case III bolters are climbed to 1200 ft AGL and vectored by the ship for another straight-in approach. Once successfully stopped by the arresting wire, the pilot reduces power, raises the flaps, slats, and hook, and proceeds to fold the wings. The aircraft is then quickly taxied out of the landing area as the arresting gear is reset in preparation for the next aircraft.

APPROACH GEOMETRY

The major difference separating a carrier landing from a field landing is the requirement for a very repeatable and highly accurate approach to touchdown. The precise nature of a successful carrier arrestment warrants an examination of the geometry involved.

Basic Angle

Carrier approaches are both similar to and different from nominal field approaches. Like the field, the aircraft is flown at a constant glideslope for the majority of the approach. Unlike the field, however, where the aircraft is flared closed to the

ground to minimize ROD, a carrier approach maintains a constant glideslope and ROD all the way to touchdown. This is due to the unpredictability of precisely controlling touch down point and attitude during flared landings. The glideslope, or basic angle, flown during an approach, is chosen depending on several different factors.

First, an aircraft flying a constant glideslope must have an adequate amount of clearance when crossing the ramp on the aft end of the carrier. This distance is termed Hook-to-Ramp (H/R) Clearance, and will be discussed shortly. Second, different glideslope settings affect the power response of jet engines differently. Ideally, the pilot would like instantaneous response from the engines when making a power addition. Jet engines, however, have an inherent "lag" from the time the throttle is moved forward until an increase in thrust is produced. This lag is greatest at low thrust settings and decreases as the thrust level is increased. For a constant airspeed approach, flying a steeper glideslope requires an increased ROD, meaning lower thrust levels and longer spool-up time when adding power. Likewise, shallower glideslopes require less ROD and provide quicker engine response. Finally, steeper glideslopes with their larger rates of descent result in higher loads on the aircraft structure and landing gear. Repeated landings at these higher loads significantly shorten the service life of the aircraft. When factoring in the inevitable glideslope deviations and possible ship motion, the ultimate strength of certain components may be in question.

The glideslope basic angle, ϕ, is chosen as a compromise between the three of these. For a no-wind approach to a stationary landing area, the basic angle becomes the actual glideslope that the aircraft is flying through the air mass. Normal field glideslopes

range from 3 to 3 ¼ deg, while carrier operations typically use 3 ½ to 4 deg angles, depending on the amount of wind present.

Hook to Ramp (H/R) Clearance

Hook to Ramp Clearance is the vertical distance between the lowest point on the aircraft's tailhook and the furthest point aft on the flight deck, or "ramp." With no ship movement, this distance should be the same for all aircraft flying the same glideslope on a given carrier. The minimum H/R Clearance for normal operations is 10 ft, while an emergency barricade arrestment only requires 8 ft. Because the distance from the touch down point to the ramp varies on different carriers, the H/R Clearance will vary as well. Table 1 gives values for H/R for different carriers at a 3 ½ deg basic angle.

Hook Touch Down Point (HTDP)

In order to successfully stop aboard the carrier, the aircraft's tailhook must engage one of four cross-deck-pendants (CDP's) or "wires" stretched across the flight deck. These wires are attached to arresting gear engines located below the flight deck which, when at the proper weight setting, will absorb the energy of the aircraft and bring it to a

Table 1
Hook to Ranp Clearance vs. Aircraft Carrier

Aircraft Carrier	Hook to Ramp Clearance in Feet (3 ½ deg Basic Angle)
CV-62	11.3
CV-63, 64, 66	14.3
CVN-65	14.2
CVN-67	14.4
CVN-68 through 74	14.1

Source: "Aircraft Recovery Bulletin No. 62-12D, Mark 6 Mod 3 Fresnel Lens Optical Landing System (FLOLS)", Department of the Navy, Naval Air Systems Command, 11 Dec 1995, (NAVAIRWARCENACDIVLKE-4.8.10.4B).

stop prior to the end of the landing area. On a Nimitz-class carrier, the first CDP, the "1-wire", is located 169.9 ft forward of the aft end of the flight deck, or "the ramp." The 2, 3, and 4 wires are located forward of the 1-wire at intervals of approximately 40 ft.

Proper HTDP depends on two factors. On one hand, the HTDP must be set sufficiently far forward to ensure adequate H/R clearance. For a 3 ½ deg basic angle, the HTDP must be set 163 ft forward of the ramp to ensure 10 ft of H/R. On a Nimitz-class carrier, this falls almost 7 ft aft of the 1-wire. On the other hand, the HTDP must also take into consideration the amount of distance the arresting gear engines allow the aircraft to run out. The engines are designed to provide a constant run-out distance, regardless of small deviations in engaging airspeed or gross weight. The aircraft obviously must stop prior to reaching the end of the angle deck, but it also must have enough room left to taxi a short distance forward prior to making a right turn to exit the landing area.

By targeting a HTDP half-way between the second and third wires (approximately 230 ft on Nimitz-class carriers), H/R is preserved while allowing adequate run-out distance. This also provides two wires forward of and two wires aft of the desired point to allow for inevitable deviations in actual HTDP. In the event that a wire must be removed, the HTPD can be moved to optimize the remaining wires, providing adequate H/R clearance still exists. A graphic presentation of approach geometry is presented in figure 4.

Hook to Eye (H/E) Value

Since the pilot is flying a constant basic angle and is attempting to have the aircraft's hook touch down at a specific point on the flight deck, it is actually the path of

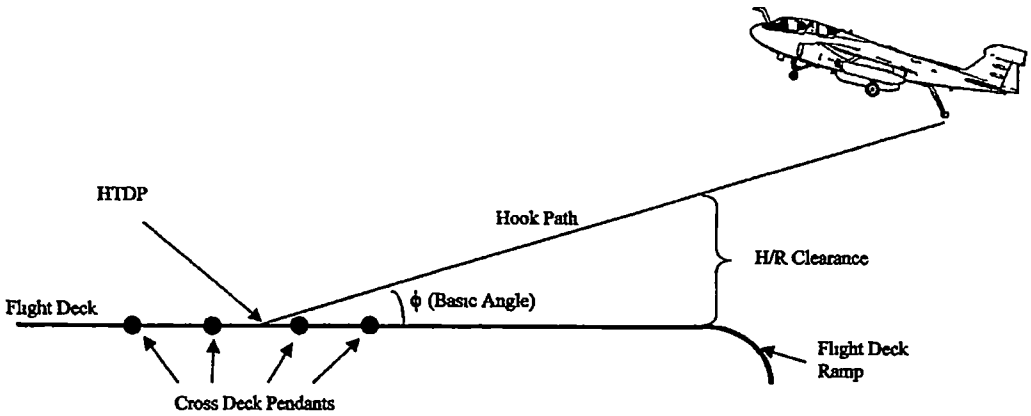

Figure 4
CARRIER APPROACH GEOMETRY

Source: Adapted from "Landing Signal Officer Reference Manual", Virginia Beach, Virginia, United States Navy Landing Signal Officer School, Sep 1991.

the hook that must fly the constant basic angle approach. The hook path of every aircraft must fly the same basic angle in order to preserve H/R clearance and maintain the same HTDP. This would be simple if only one type of aircraft flew from the carrier. Unfortunately, several different types of aircraft operate off of carriers and have very different characteristics and flying qualities. Approach speeds and AOA's vary widely between aircraft, as do physical dimensions.

This difference in aircraft is compensated for by what is called the Hook to Eye (H/E) value. H/E is the vertical distance from the path of the pilot's eye to the path of the lowest point on the arresting hook, relative to the carrier. Figure 5 provides a graphic presentation of H/E value.

Discarding the effects of recovery head wind, the H/E value for any aircraft is defined by Equation 1:

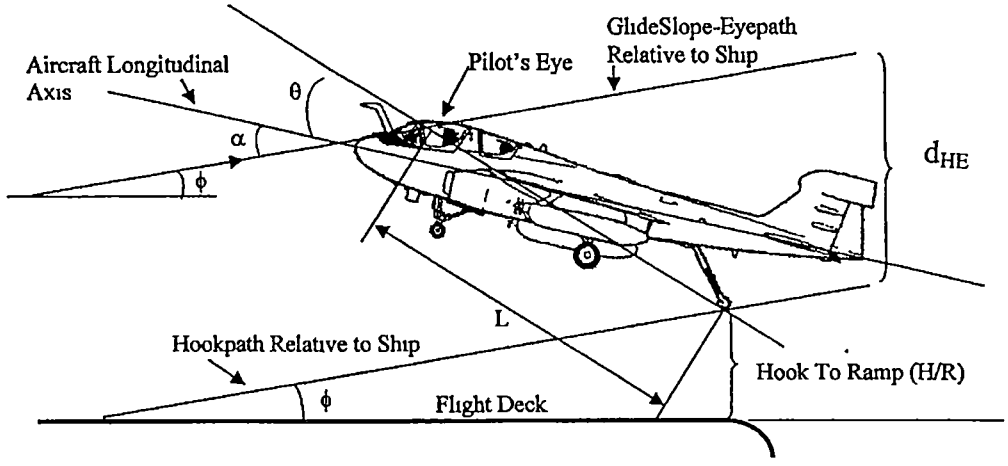

Figure 5
AIRCRAFT HOOK TO EYE (H/E) VALUE

Source: Adapted from: "Aircraft Recovery Bulletin No. 10-10D For All Arresting Gear and Optical Landing Systems", Patuxent River, Maryland, Naval Air Systems Command Headquarters, 18 Nov 1997 (NAVAIRWARCENACDIVLKE-4.8.10.4B)

$$d_{HE} = \frac{L\sin(\theta+\alpha)}{\cos\phi} \qquad \text{(Equation 1)}$$

Where. d_{HE} = Hook to Eye distance
L = distance from the pilot's eye to the aircraft hook point
θ = angle between aircraft's longitudinal axis and the hook-to-eye line
α = aircraft's angle of attack (AOA)
ϕ = optical glide slope angle setting (basic angle)

For the small values of basic angle used aboard the carrier (5 deg and less), the differences in d_{HE} for changes in ϕ are insignificant and may be neglected. This simplifies Equation 1 to an expression independent of glideslope:

$$d_{HE} = L\sin(\theta + \alpha) \qquad \text{(Equation 2)}$$

The distance L and the angle θ are provided by the aircraft's manufacturer and are considered constant Since the sum of θ and α will always be less than 90°, it can be seen from Equation 2 that increases in AOA will always result in increases in d_{HE}

Theoretically, AOA should remain constant throughout the entire approach. Several instances may occur in which this does not happen. First, a pilot may not have the aircraft trimmed properly. If he fixates on either glideslope or lineup, AOA may fall out of his scan and the aircraft may accelerate or decelerate by several knots, changing the H/E value. Second, a pilot may intentionally or unintentionally move the aircraft's nose to effect a change in glideslope, usually very close to touchdown. This will alter the aircraft's AOA as well and will change the H/E value. Finally, aircraft emergencies can force an approach in other than the optimum configuration. No flap or single-engine emergencies generally require a faster approach speed and can significantly change H/E values depending on the characteristics of the aircraft. Small changes in H/E can have large effects on HTDP. For a 3 ½ deg basic angle, a 1 ft change in H/E will shift the HTDP 16.3 ft.

H/E values for aircraft in normal configurations are provided in Table 2. A combination of a long fuselage and a high approach AOA generally result in large H/E values, as can be seen in the F-14 series and the EA-6B.

SHIP MOTION

Despite the extremely large size and weight of an aircraft carrier, relatively low sea states can have significant effects on the movement of the ship. For a pilot attempting to precisely land a 45,000 lb aircraft on a small flight deck, even seemingly small movements in the landing area can result in large touchdown point dispersions. Large movement of the ship can comprise the safety of the pilot and aircraft by decreasing H/R clearance, increasing ROD's at touchdown, and causing off-centerline landings. Since this paper addresses the FLOLS and IFLOLS, which are glideslope

Table 2
Aircraft Hook to Eye (H/E) Values in the Normal Landing Configuration

Aircraft Model	Aircraft Hook to Eye (H/E) Value (ft)
EA-6B	18.75
S-3A	14.50
E-2/C-2	15.00
F-14 Series	19.70
F/A-18 A-D Series	16 70
F/A-18 E/F	17 10
T-45A	12.00

Source: Aircraft Recovery Bulletin No. 62-12D, Mark 6 Mod 3 Fresnel Lens Optical Landing System (FLOLS), Department of the Navy, Naval Air Systems Command, 11 Dec 1995, (NAVAIRWARCENACDIVLKE-4.8.10.4B).

landing aids, the effects of ship's motion will be limited to those areas that have a direct impact on glideslope geometry. It should be noted, however, that ship's motion also has significant effects on centerline capture and maintenance during carrier approaches.

Ship motion, like aircraft motion, can be divided into two parts: static motion and dynamic motion. The static motion of an aircraft carrier, referred to as "ship's trim," is the long-term position of the ship in relation to the horizon. Depending on the loading of the carrier, the ship can list to either side, ride with the bow or stern higher than the other, or physically sit higher or lower in the water. This condition can persist for several hours or several days depending on where and how aircraft, fuel, ordnance, etc., are moved about the carrier. Dynamic motion is the short-term, oscillatory movement of the carrier due to sea state and other environmental conditions. Although usually repetitive in nature, the motion can be unpredictable as the ship moves simultaneously about all three axes.

Center of Gravity (CG)

The center of gravity (CG) for an aircraft carrier is a constantly changing point and is dependent on numerous factors. Aircraft can be flying, taxiing, parked on the flight deck, or positioned for repairs in the hangar bay. Both live and practice ordnance are routinely moved from the ship's magazine up to the flight deck and back again. Enormous amounts of fuel and water are moved about through pipes and storage tanks daily. It is safe to say that the CG of an aircraft carrier rarely stays in one position for very long. CG is directly responsible for the ship's trim and also affects the dynamic modes of motion as well.

Center of Rotation (CR)

The center of rotation (CR) is the theoretical point about which all rotation occurs. Each class of aircraft carrier has a different hull design and therefore has different CR's for each of the three axes. Because hull design also effects the ship's motion generated by the sea, CR's are not necessarily co-located with the CG. CR data is available for all aircraft carriers in the LSO Reference Manual. A general presentation of CR is shown in figure 6. It is important to note that CR's are not located at either the usual HTDP between the second and third CDP, or on the centerline of the flight deck landing area. This tends to produce coupling from one axis to the other and can generate some interesting motion of the landing area.

Ship's Trim

An aircraft carrier with a CG positioned such that the flight deck is parallel to the horizon is said to be "statically in-trim." More often than not, however, the loading of the ship is such that this is not the case. This is known as a "static mistrim." The ship

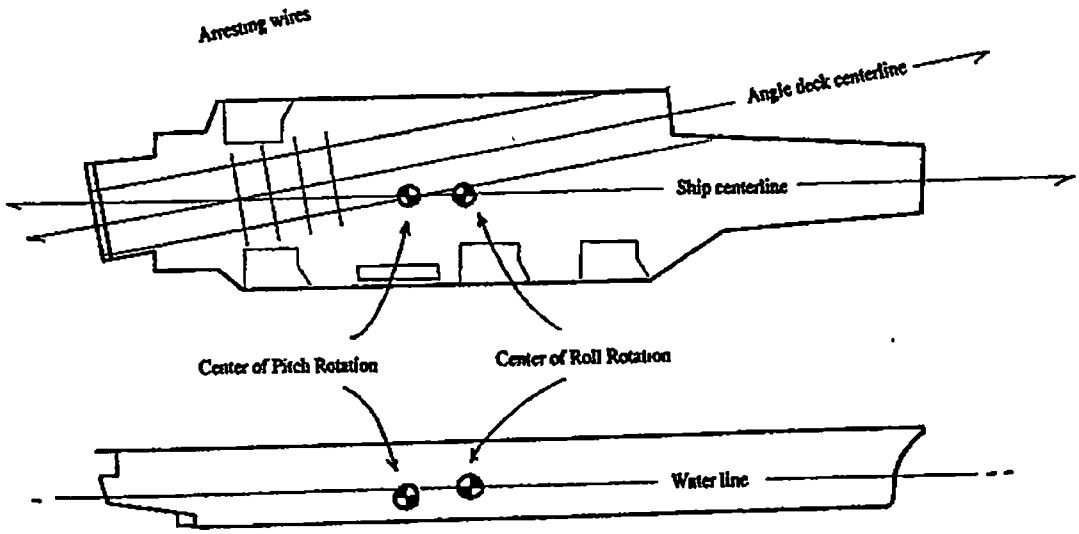

Figure 6
CENTER OF ROTATION (CR)

Source: Nielson, Wesley S., "Aircraft Carrier Visual Landing Aids", University of Tennessee, Knoxville, July 1994.

can be mistrimmed in pitch (bow or stern up or down) or roll (port or starboard side up or down) or a combination of the two. A static mistrim situation will change the approach geometry and may need to be compensated for.

A static mistrim in the pitch axis will cause the actual HTDP to vary if the basic angle is left unchanged. The H/R clearance will also change in this situation. To correct for a static mistrim in pitch, several options are available. The targeted HTDP can be left the same as long as a minimum of 10 ft H/R clearance is still available. If this minimum cannot be met, the HTDP can be shifted forward until 10 ft can be obtained. Finally, a different basic angle can be selected while leaving the targeted HTDP the same. These three options are presented graphically in figure 7.

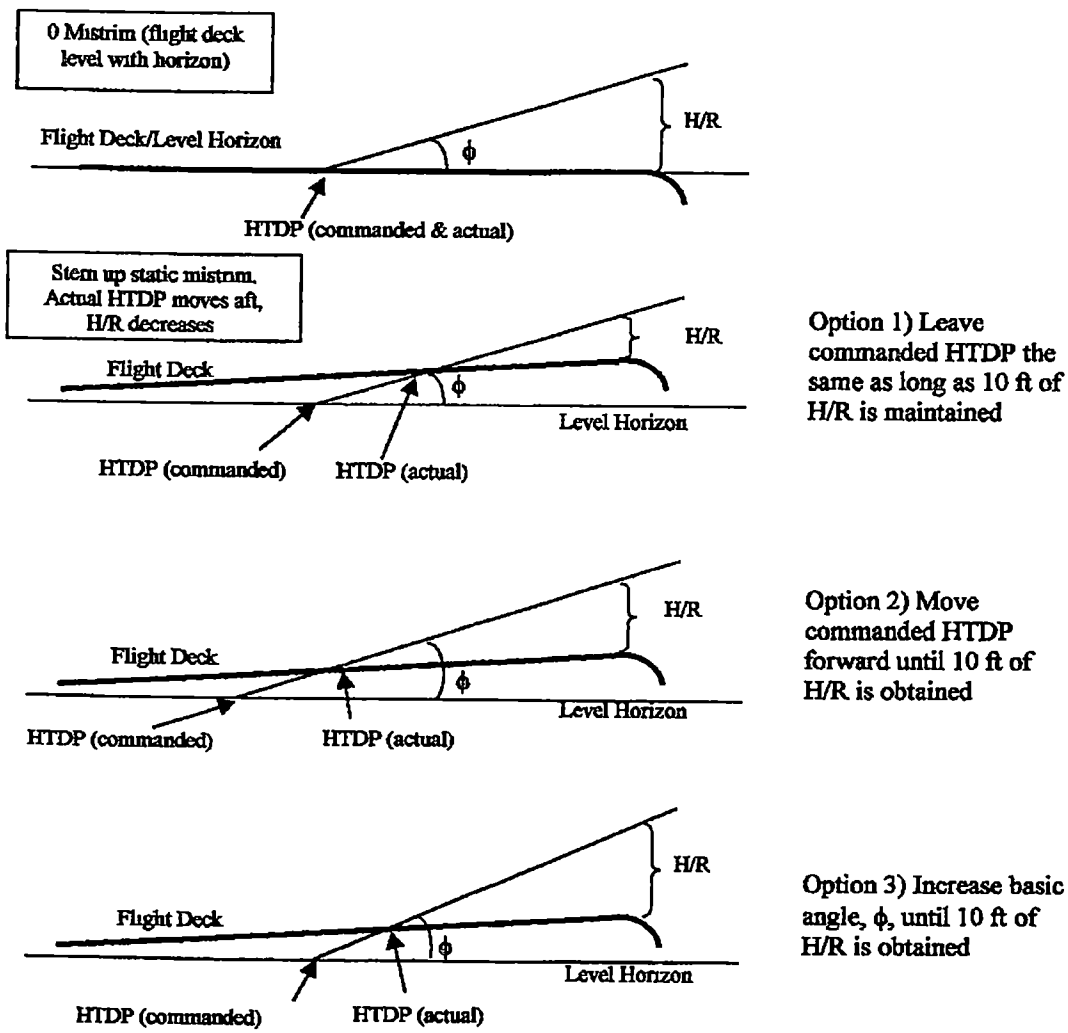

Figure 7
COMPENSATION FOR PITCH STATIC MISTRIM

A static mistrim in the roll axis has a much smaller effect on glideslope geometry and is usually negligible when compared to the effect of static pitch mistrim. One full degree of roll mistrim will only change the H/R on most ships by six to eight inches. In contrast, a pitch mistrim of only 0.5 degrees may affect H/R by as much as two feet (LSO Reference Manual.) Static roll mistrim is usually ignored until the value reaches 2 degrees or more.

Pitch

The dynamic motion of the flight deck most noticeable to both approaching pilots and LSO's is in the pitch axis. On Nimitz-class aircraft carriers, the center of pitch rotation is located approximately 461 ft forward of the aft-most portion of the landing area and 54 ft below the flight deck. If the stern of the ship rotates upward, the portion of the landing area aft of the CR will also move up. The portion of the landing area and the rest of the ship which lies forward of the CR will rotate down. The LSO Reference Manual states that deck motion during flight operations seldom exceeds ±1.5° pitch. Although seemingly a small number, 3° of pitch (1.5° up and 1.5° down) coupled with a 461 ft pitch moment arm distance results in 24.1 ft of total vertical ramp movement. These pitch motions will affect glideslope geometry similar to the way a static pitch mistrim will. H/R will vary anytime the flight deck is pitching and can often be reduced below the minimum of 10 ft. The options for remedying this are the same as for a static mistrim. The HTDP can be moved forward or the basic angle can be increased to maintain adequate H/R clearance. Unlike a static mistrim however, is the fact that pitching decks can result in increased ROD's and possible structural damage. An aircraft flying a normal basic angle may have the flight deck cycle down during his approach. As

the aircraft is about to land, the deck may reverse and begin to cycle up. This increases the ROD (aircraft ROD plus deck rate coming up) and can cause tires and landing gear to fail, stores to depart the aircraft, and even internal structural components to bend or break. Aircraft that get out of cycle with the deck are usually "waved-off" by the LSO and sent around to make another approach.

Roll

Just as the carrier can pitch up and down, it can also roll from side-to-side. Ship's movement seldom exceeds ±2.2° of roll (LSO Reference Manual), but due to the unique arrangement of the flight deck, can have some interesting effects. Ideally, the CR for roll would be co-located with and run parallel to the angle deck centerline. This would allow the landing area to rotate, much like an aircraft, around its centerline. Unfortunately, the CR for roll on Nimitz-class carriers is located 54 ft below the flight deck and the centerline of the landing area is canted from between 9 to 12 degrees from the longitudinal centerline of the carrier. Several factors occur as a result of this characteristic.

Instead of merely rolling about it's centerline, the landing area is actually displaced laterally with every rolling motion of the ship. Figure 8 presents a simplified explanation of this displacement. Using simple geometry, the following equation can be solved to determine the displacement.

$$D = 2d\sin(x/2) \qquad \text{(Equation 3)}$$

Where: D = lateral displacement of a point in the landing area
d = vertical distance from point in landing area to CR for roll
x = total roll angle

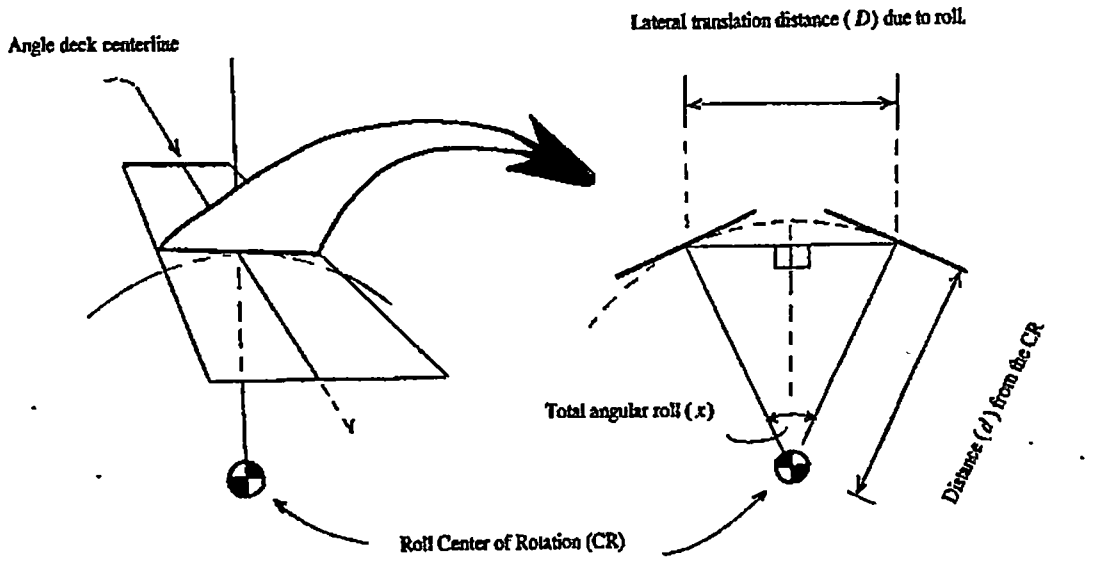

Figure 8
LATERAL DISPLACEMENT OF THE FLIGHT DECK DUE TO ROLLING MOTION

Source: Nielson, Wesley S., "Aircraft Carrier Visual Landing Aids", University of Tennessee, Knoxville, Jul 1994.

Utilizing a Nimitz-class carrier with a distance of 53.6 ft from the flight deck to the CR for roll and a total of 4.4° of roll (2.2° left and 2.2° right), the flight deck will be displaced a total of 4.1 ft (Nielson). In order to prevent damage to the arresting gear engines, pilots are required to touch down within ten ft either side of centerline. It can be seen that any rolling motion is reducing the pilot's tolerance for centerline touchdown.

The rolling motion of the ship also causes problems for pilots at night and during the latter portions of an approach during the day. A perfectly steady deck with no static mistrim will be aligned with the horizon. When the carrier starts rolling, however, the deck does not match up with the horizon. As the pilot approaches the ship, the deck begins to fill more and more of his field of view. During day approaches, the pilot

subsequently shifts his concentration from the horizon to the flight deck to determine what is a wing's level attitude. On dark nights or in bad weather without a natural horizon, the pilot's only indication of wing's level, once coming off of his instruments, is the flight deck. As the ship rolls, the pilot tends to level his wings with the flight deck, which induces drift rates and only aggravates centerline and subsequently, glideslope control.

H/R clearance and HTDP are also affected by the dynamic rolling motions of the carrier. If the landing area rolled about its centerline, H/R (measured on centerline) would be unaffected, as would HTDP. The roll axis, however, differs from the landing area centerline axis by approximately the number of degrees corresponding to the angle deck. Negating the lateral displacement effects discussed previously, and assuming that the roll axis lies in the same plane as the flight deck, figure 9 presents a three-dimensional view of the rolling motion effects on the flight deck. Considering a left roll, the portion of the flight deck to the right of the roll axis will rise while the rest of the flight deck will descend. A right roll will produce the opposite effect.

A two dimensional view of the flight deck centerline from the side shows that the effect on glideslope geometry appears similar to that of the ship's pitching motion. The difference is that the effect due to the rolling motion is not rotating about the CR for pitch. Instead, the rotation is taking place at a point where the rolling axis of the ship and the centerline of the angle deck intersect. On Nimitz class aircraft carriers, this point is near where the centerline crosses the number one CDP. Figure 10 shows the effect on glideslope geometry that a left rolling motion would cause. These effects can be compensated for in the same manner as for pitching motions and static pitch mistrim.

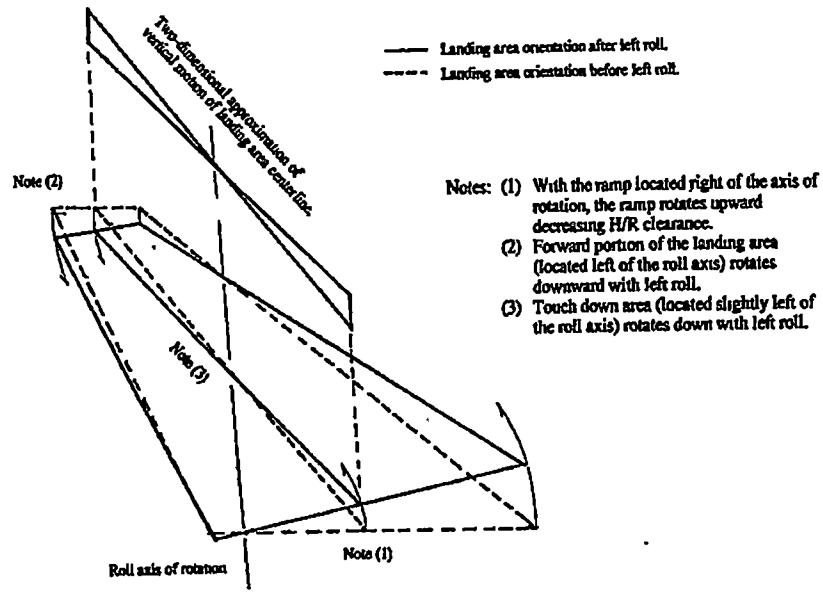

Figure 9
FLIGHT DECK DISPLACEMENT DUE TO ROLLING MOTION

Source: Nielson, Wesley S., "Aircraft Carrier Visual Landing Aids", University of Tennessee, Knoxville, Jul 1994.

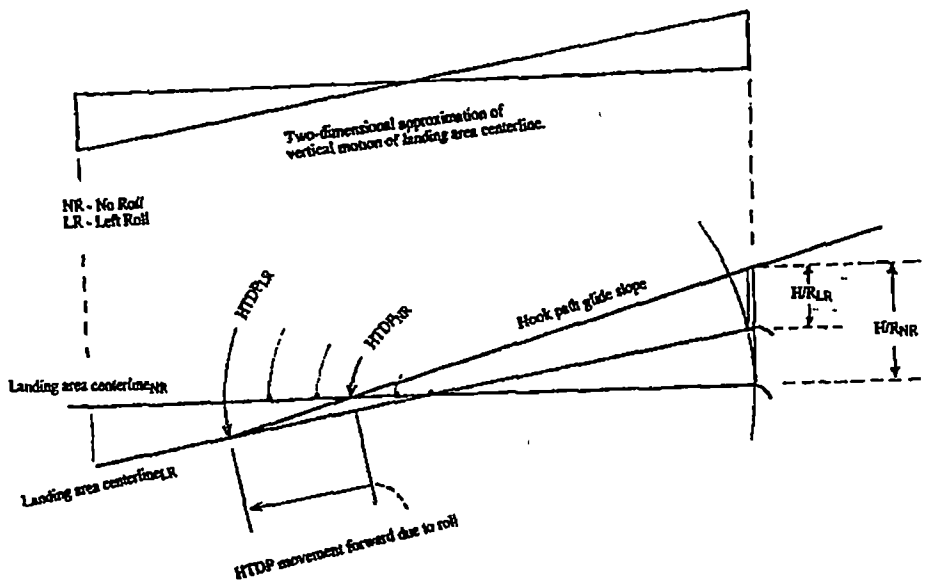

Figure 10
EFFECT ON CENTERLINE GLIDESLOPE GEOMETRY FROM A LEFT ROLL

Source: Nielson, Wesley S., "Aircraft Carrier Visual Landing Aids", University of Tennessee, Knoxville, Jul 1994.

Yaw

Yaw is the rotational motion that results when the ship makes a turn to either the left or right. Large rudders located under the stern of the ship are deflected in response to commands from the ship's bridge to effect heading changes. Movement of the rudders displaces large amounts of water and physically forces the aft end of the ship to rotate to either side. During carrier approaches, yaw affects aircraft more in tracking and maintaining landing area centerline then flying glideslope. The carrier is attempting to maintain a steady wind of 25 to 30 knots down the angled deck during aircraft recoveries. Depending on the ambient wind conditions, frequent heading changes of 5 to 10 degrees may be required to maintain the desired wind conditions. As the stern of the ship moves, the extended centerline of the landing area also moves. The amount of change increases with increasing distance and is most noticeable during the straight-in approaches performed during night and Case III operations. Although primarily affecting line-up control, yaw has an indirect effect on glideslope. Any difficulty that is experienced in maintaining centerline during an approach usually results in poor glideslope control.

Heave

Heave is the pure vertical displacement of the ship caused by wave swells. Ship's heave during flight operations rarely exceeds 5.5 ft (LSO Reference Manual). If the visual landing aid presenting basic angle has the glideslope stabilized in space, the heave has the same effect on H/R clearance as does a pitching deck. HTDP is also effected, but in a more linear fashion than pitch movement. Hook Touch Down Constant (HTDC) is defined as the amount of translation of the HTDP forward or aft in the landing area for

each one-foot deviation in H/R clearance. Table 3 presents HTDC's for several basic angles.

THE LANDING SIGNAL OFFICER (LSO)

When the Navy attached boards to the top of a destroyer and began launching and recovering aircraft from ships in 1911, pilots were expected to land their planes with nothing other than their instruments and their flying skills. It quickly became apparent they some sort of assistance was needed to limit the loss of both aviators and aircraft during the approach and landing phases. In 1922, Commander Keith Whiting, serving aboard the Navy's first aircraft carrier, the Langley, observed an aircraft making a less than optimal approach. He quickly grabbed the hats of two sailors and ran out to the flight deck to wave them at the pilot of the aircraft. Commander Whiting had the distinction of serving as the Navy's first Landing Signal Officer (LSO). The idea quickly caught on and the LSO community was born.

Subsequent LSO's were carrier experienced aviators who stood on a raised platform near the port side of the landing area. Positioned in front of a neutral colored backdrop, the LSO was armed with a highly visible set of colored paddles. Through a series of gestures and movements, the early LSO's provided their squadron-mates with

Table 3
Basic Angle vs Hook Touch Down Constant (HTDC)

Basic Angle (deg)	Hook Touch Down Constant (ft)
3.5	16 3
3.75	15.3
4.0	14.3

Source: "Landing Signal Officer Reference Manual", Virginia Beach, Virginia, United States Navy Landing Signal Officer School, Sep 1991.

glideslope, attitude, and line-up guidance all the way to touchdown. Figure 11 shows various LSO signals and their meanings to approaching pilots. In periods of reduced visibility and at night, LSO's would don a jumpsuit with reflective material sewn on (shown in figure 12) and utilize ultrviolet lights to allow incoming pilots to see them. The LSO was the first visual landing aid onboard an aircraft carrier.

Even though optical landing systems were soon developed, the LSO remained an integral part of carrier recovery operations. To this day, even though paddles and fluorescent jumpsuits are a thing of the past, LSO's are present on the platform and are responsible for "the safe and expeditious recovery of aircraft" (LSO NATOPS Manual). The LSO, in combination with current visual landing aids, provides a safe and efficient means of recovering fixed wing aircraft aboard aircraft carriers.

MIRROR OPTICAL LANDING SYSTEM (MOLS)

As carrier aircraft grew larger and faster, a means was needed to augment the LSO and provide pilots with a highly repeatable form of glideslope presentation. Developed by the Douglas Aircraft Company, the Mirror Optical Landing System (MOLS) was the first visual landing aid for glideslope installed on U.S. aircraft carriers. The first MOLS units were installed on both the USS Wasp (CV-18) and USS Midway (CV-41) in 1952.

The MOLS consisted of a large, ground-glass, concave mirror, which faced aft and was located on the port side of the flight deck landing area. The unit was stabilized in pitch and utilized a large mechanism to raise and lower the entire assembly to compensate for varying aircraft H/E values. A set of three source lights, also on the port side of the flight deck but facing towards the mirror, were located approximately 150 ft

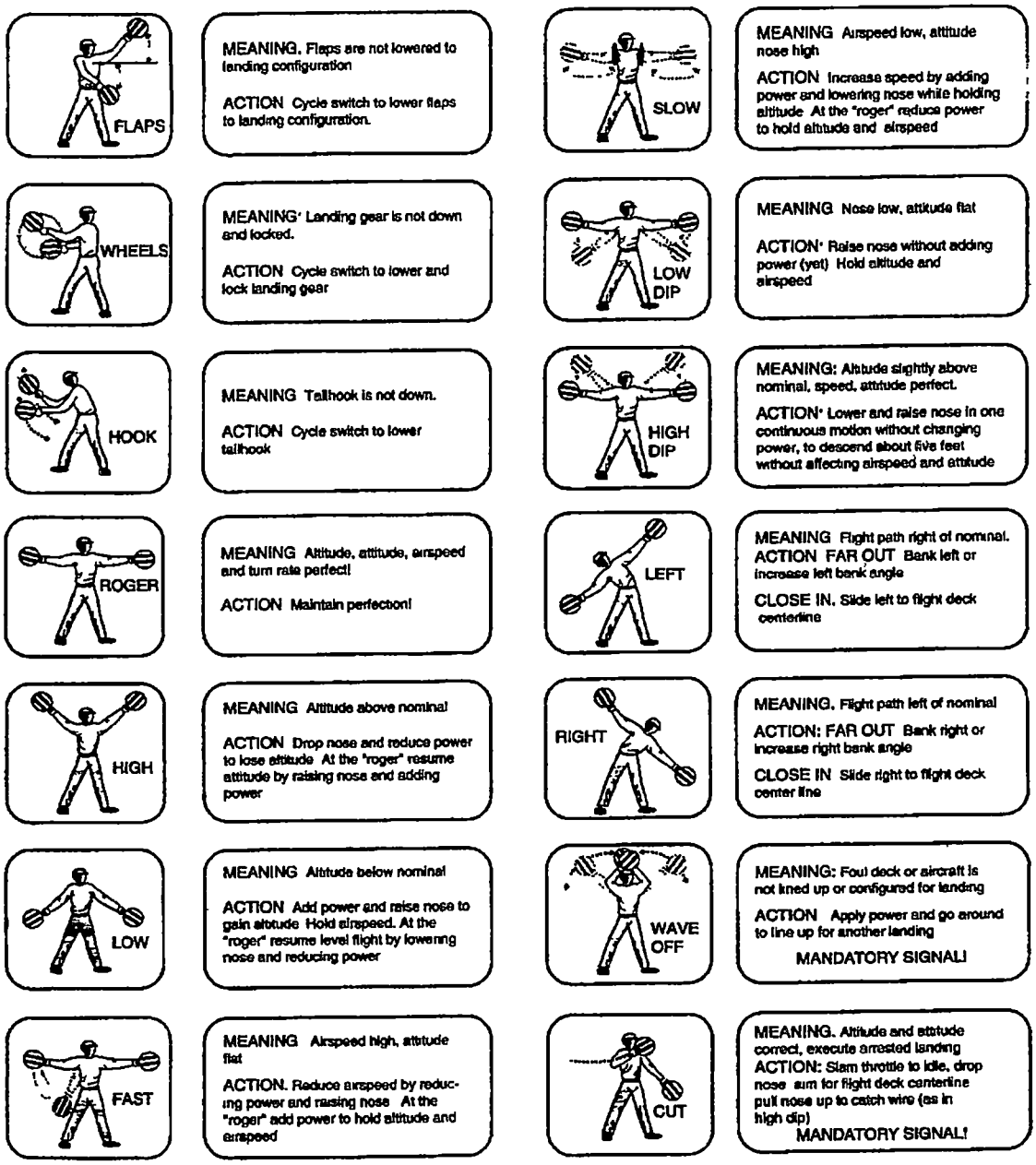

Figure 11
LANDING SIGNAL OFFICER SIGNALS

Source: "Silent Communications of the Old Carrier", LT George H. Durand, USN (Ret), The Hook Magazine, Winter 1992.

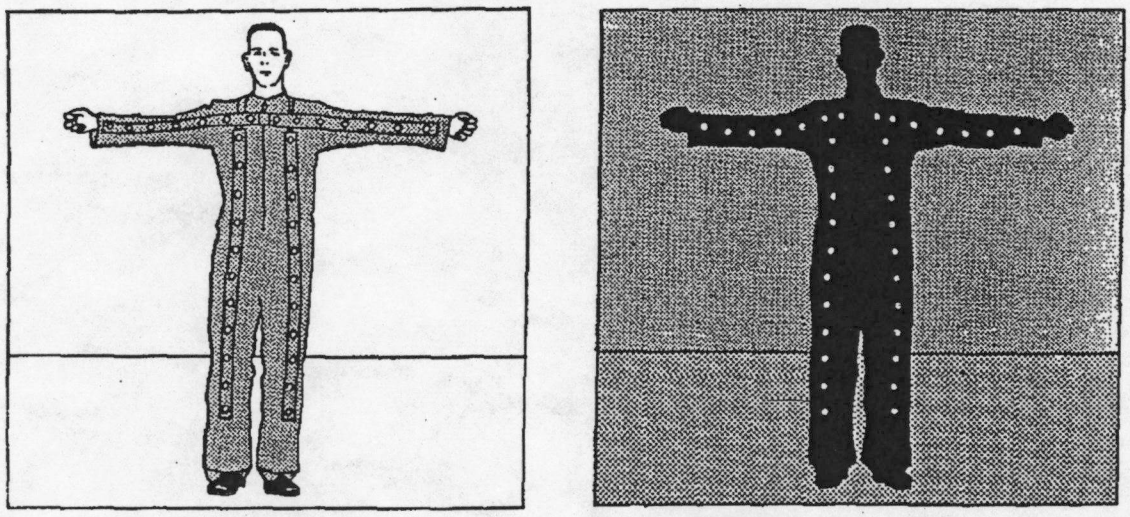

LANDING SIGNAL LIGHT ASSEMBLY-
BATTERY OPERATED

SUIT LIGHTED FOR NIGHT OPERATION

Figure 12
LANDING SIGNAL OFFICER REFLECTIVE JUMPSUIT

Source: "Visual Landing Aids, Design Standards, Ship board Installation", Washington, D.C., Chief of Naval Operations, 01 Jun 1974, (NAVAIR 51-50 AAA-1).

aft of the mirror. Glideslope settings were obtained by tilting the mirror assembly with respect to the light beam from the source lights. Approaching pilots could see the source lights, referred to as "the meatball", reflected in the mirror. Position in relation to glideslope was determined by comparing the meatball position to a fixed set of six datum lights extending horizontally from both sides of the mirror. As presented in figure 13, a stabilized meatball in line with the datums indicated the aircraft was on glideslope, while a meatball above or below the datums indicated a similar deviation from glideslope. A field-based MOLS unit is displayed in figure 14.

The MOLS also provided a means for the LSO to communicate with approaching pilots. A set of four green lights, known as "cut" lights, were mounted above the mirror

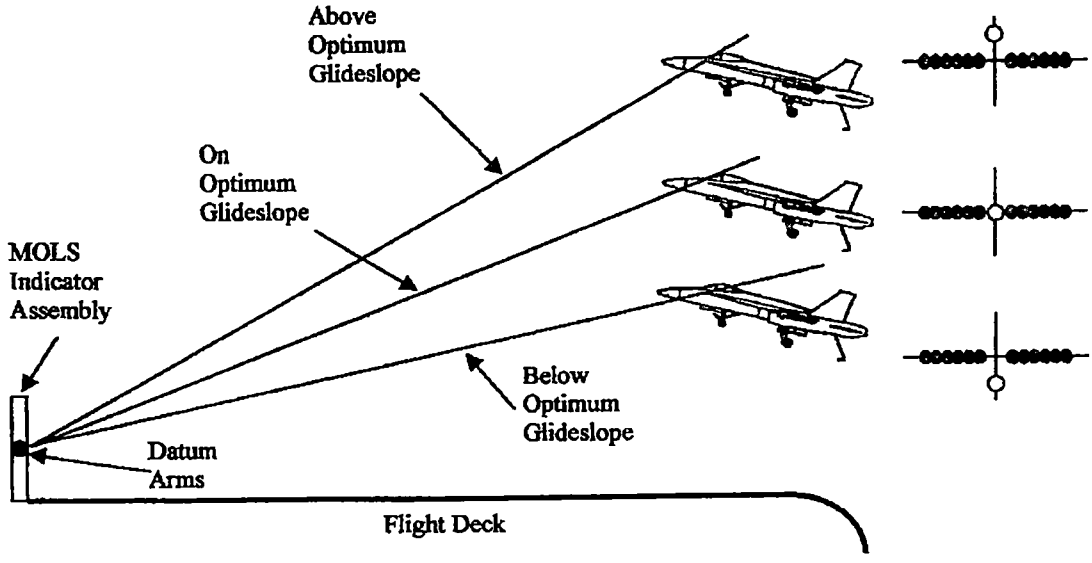

Figure 13
MOLS GLIDESLOPE PRESENTATION

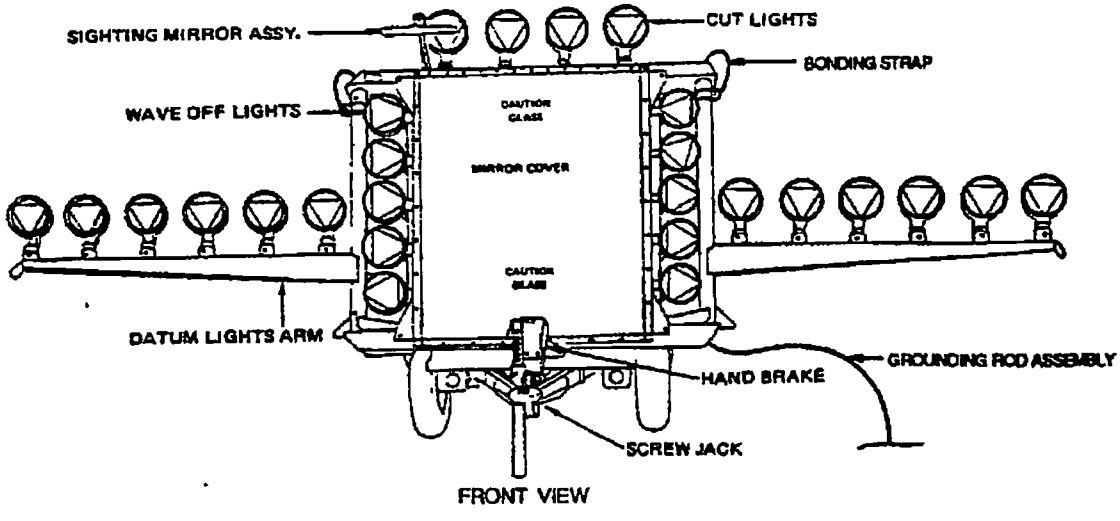

Figure 14
MIRROR OPTICAL LANDING SYSTEM

Source: "Landing Signal Officer Reference Manual", Virginia Beach, Virginia, United States Navy Landing Signal Officer School, Sep 1991.

assembly and were activated to inform pilots of propeller driven aircraft when to "cut" their engines. Five red "waveoff" lights were mounted vertically along each side of the mirror, inboard of the datums. When activated, these lights flashed on and off to signal approaching pilots to discontinue the approach or "waveoff." Both the "cut" and "waveoff" lights, depicted in figure 14, were controlled by the LSO via a "pickle switch." The pickle switch, shown in figure 15, was connected to the MOLS via a cable. The "cut" lights activated as long as the cut button was held down and were extinguished when it was released. The "waveoff" lights were initiated with a push of the waveoff button and remained on until the LSO pushed the button again.

For glideslope presentation, the MOLS was a vast improvement over the LSO waving a set of paddles. It was easier to see, especially at night, and was more visible at increased distances than the jumpsuit-clad LSO. The curved shape of the mirror also allowed the pilot to view the glideslope presentation prior to rolling out on the

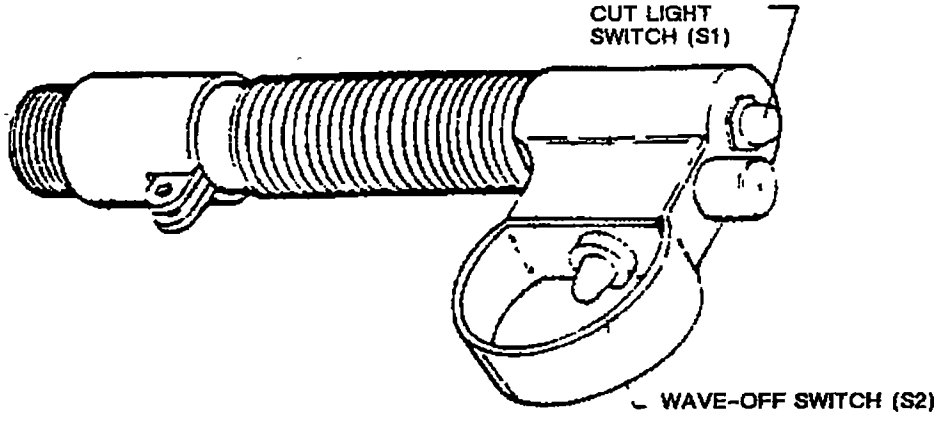

Figure 15
LSO PICKLE SWITCH

Source: "Landing Signal Officer Reference Manual", Virginia Beach, Virginia, United States Navy Landing Signal Officer School, Sep 1991.

carrier centerline. The MOLS, however, was not without it's own problems.

Anything operating on the flight deck of an aircraft carrier is exposed to sea spray, which tends to coat surfaces, especially glass or plastic, with a film of salt. In addition to sea spray, aircraft tend to leak fuel, oil, hydraulic fluid, and grease on the flight deck and nearby objects. These substances tended to accumulate very quickly on the mirror portion of the MOLS and distort the source light presentation. Keeping the mirror clean was a frequent and time-consuming task. Also, the sheer size and weight of the unit made it very cumbersome to rapidly compensate for varying H/E values. Finally, the distance between the unit and the source lights needed to remain clear which reduced the already limited area available on the flight deck to park aircraft and equipment.

While vast improvements have been made in subsequent glideslope systems, the MOLS concept of a moving source in relation to a fixed set of datums has not changed. Although no longer in service aboard any U.S. aircraft carrier, MOLS units were still utilized at several Naval Air Stations (NAS) up until the early 1990's.

FRESNEL LENS OPTICAL LANDING SYSTEM (FLOLS)

As technology progressed, the next generation of glideslope landing aid emerged. In 1960, the Control Instrument Corporation, a subsidiary of the Burroughs Corporation of Brooklyn, New York, introduced the initial version of the Fresnel Lens Optical Landing System (FLOLS). The system was designed to be easier to operate, more reliable, and more advanced at compensating for the motion of the carrier. The latest version, the MK6 MOD3 FLOLS, is the system currently in use on every U.S. aircraft carrier.

Description

The FLOLS deck edge unit, shown in figure 16, is very similar in appearance to the MOLS. It utilizes five optic cell assemblies, vice a mirror, mounted in a 50 in vertical stacking frame to display the source or "meatball." Similar to the MOLS, a horizontal row of green lights extends from both sides of the source assembly and serves as datums for the source. The FLOLS retains the use of the LSO pickle switch to control both the "cut" and "waveoff" lights and also added a second set of "emergency" waveoff lights as a backup The waveoff lights operate at 90 flashes per minute, and when initiated, first flash at the maximum intensity, and then decrease to the preset brightness. Additional controls and displays for the FLOLS are located in the FLOLS control room (located one

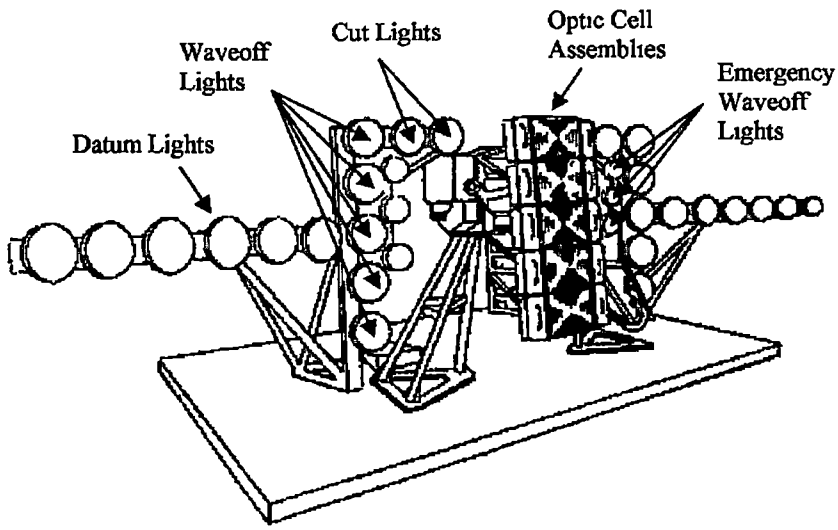

Figure 16
FRESNEL LENS OPTICAL LANDING SYSTEM DECK EDGE UNIT

Source: Adapted from "Visual Landing Aids, Design Standards, Ship board Installation", Washington, D.C., Chief of Naval Operations, 01 Jun 1974, (NAVAIR 51-50 AAA-1).

story below the flight deck), in Primary Flight Control (located in the carrier's tower), and on the LSO platform console.

Optical Characteristics

The optical cells in the FLOLS utilize two different types of lenses: the Fresnel lens and the lenticular lens. A typical plano-convex lens has a plane, or flat surface on one side, and a curved surface on the other. The radius of the spherical surface is known as the radius of curvature. This type of lens is referred to as positive, or collective, in that rays of light are collected together at a focus point to form an image. A Fresnel lens is constructed as a lightweight and relatively thin piece of transparent lucite, and is, like the plano-convex lens, a collective lens. The construction of the Fresnel lens, however, differs from the plano-convex lens as shown in figure 17.

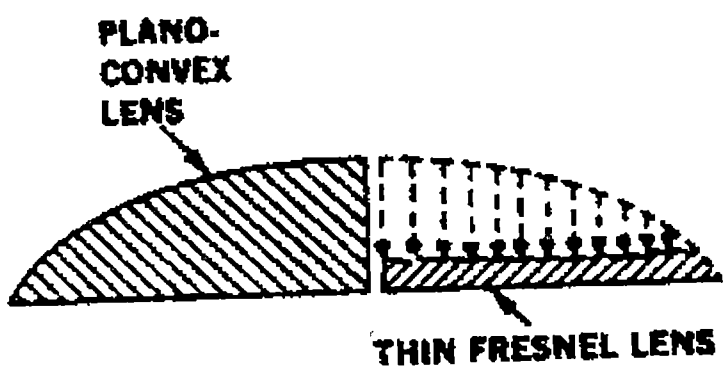

Figure 17
PLANO-CONVEX LENS / FRESNEL LENS DESIGN COMPARISON

Source: "Landing Signal Officer Reference Manual", Virginia Beach, Virginia, United States Navy Landing Signal Officer School, Sep 1991.

One surface of the Fresnel lens consists of a number of stepped facets. These facets are circular, concentric grooves that extend from the center of the lens to the edges (LSO Reference Manual.)

The slope of each facet on the Fresnel lens is designed independently of all other facets. This is done in order to perfectly focus the light rays that are passing through the lens. Figure 18 presents an optical comparison of a plano-convex lens and a Fresnel lens. Light passing through a plano-convex lens suffers from a phenomenon known as spherical aberration. Light which is parallel to the principal axis of a convex-spherical lens and passes through zones near the edge will focus at a point closer to the lens than for rays passing through near the principal axis.

A lenticular lens consists of several long, convex, cylindrical lenses placed side by side as depicted in figure 19. Each of these lenses has identical, short focal lengths. The resulting effect is that the viewing area of the object is spread by the short focal length of the lenticular lens. The advantage of this arrangement comes when a viewing object consists of several light sources separated by space. When viewed through a lenticular lens, the spaces will disappear and the object appears as a single, continuous band of light that fills the width of the lens.

Each of the FLOLS five optic cell assemblies utilizes a set of three source bulbs, which project through a Fresnel lens and then a lenticular lens. This arrangement results in the source lamps appearing as a common light image 12 in wide and of variable height depending on viewing distance. The focal point, or virtual image of the FLOLS, appears 140 ft behind the lens assembly (forward in the landing area.) The total field of projection for all five cells, called the Vertical Field Angle and shown in figure 20, is

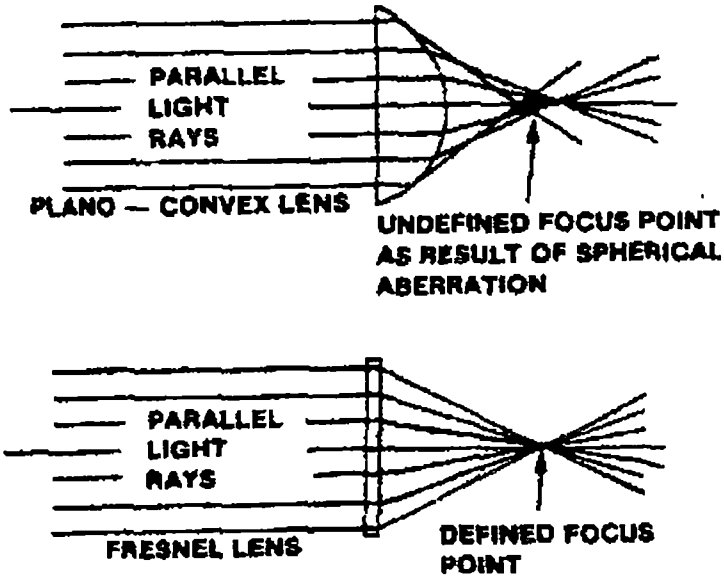

Figure 18
PLANO-CONVEX LENS / FRESNEL LENS OPTICAL COMPARISON

Source: "Landing Signal Officer Reference Manual", Virginia Beach, Virginia, United States Navy Landing Signal Officer School, Sep 1991.

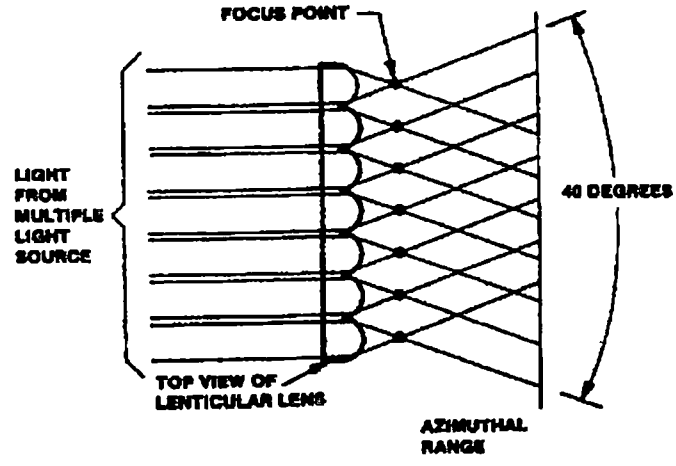

Figure 19
LENTICULAR LENS

Source: "Landing Signal Officer Reference Manual", Virginia Beach, Virginia, United States Navy Landing Signal Officer School, Sep 1991.

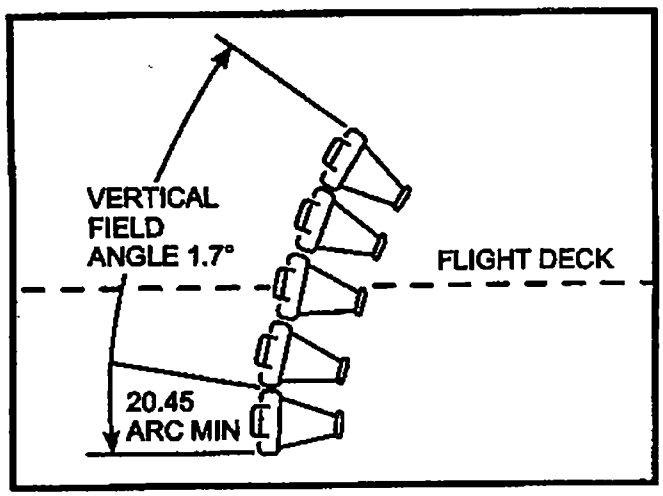

Figure 20
FLOLS VERTICAL FIELD ANGLE

Source: "NATOPS Landing Signal Officer Manual", Washington, D.C., Chief of Naval Operations, 01 Nov 1997, (NAVAIR 00-80T-104).

approximately 1.7 degrees, with each cell accounting for 0.34 degree of arc or 20.45 arc min. The vertically fluted lenticular lens provides an azimuthal range (the angular position in a horizontal plane that the light can be observed) of ±20 deg, as shown in figure 21.

Operation

The inherent characteristics of the Fresnel lens provide a linear projected glideslope. In other words, the glideslope becomes wider or less accurate as distance from the lens is increased (linearly.) Table 4 presents the vertical beam height of a cell versus the distance aft of the virtual image point. It becomes apparent that a pilot's glideslope corrections must decrease in magnitude as the aircraft approaches the flight deck.

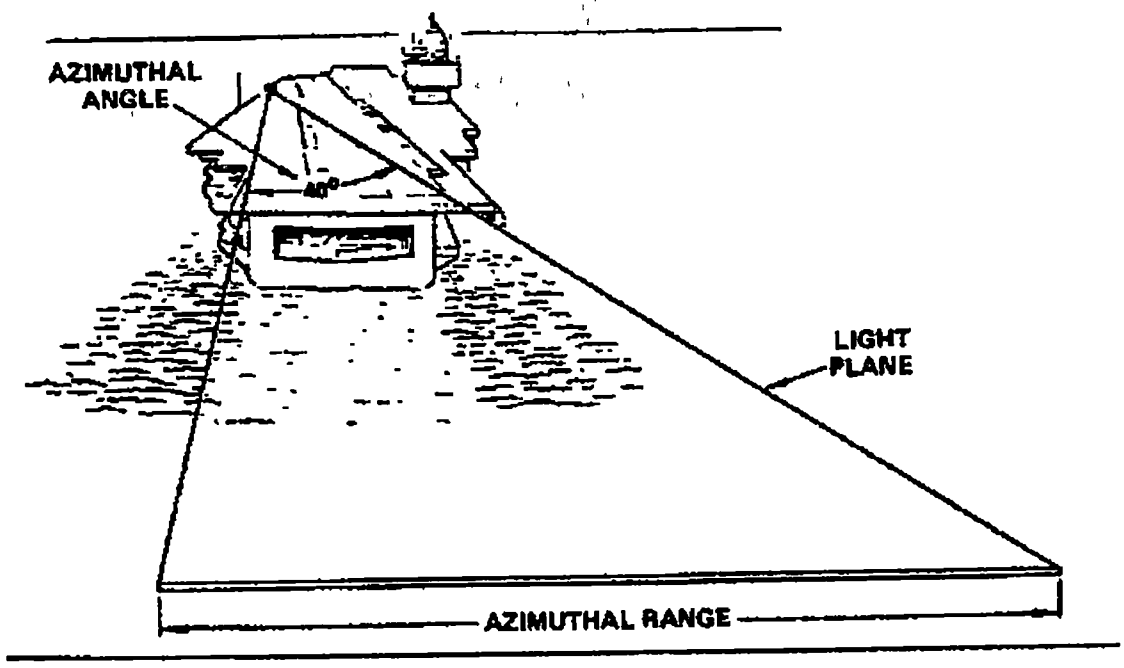

Figure 21
FLOLS AZIMUTHAL RANGE

Source: "Landing Signal Officer Reference Manual", Virginia Beach, Virginia, United States Navy Landing Signal Officer School, Sep 1991.

Table 4
Vertical Beam Height vs. Distance Aft of Virtual Image Point

Distance Aft of Virtual Image Point	Vertical Beam Height of All 5 Cells	Vertical Beam Height of Center Cell (Or Any Cell)
375 ft	11.2 ft	2.2 ft
500 ft	14.9 ft	3.0 ft
750 ft	22.3 ft	4.5 ft
¼ nm	45.2 ft	9.0 ft
½ nm	90.4 ft	18.1 ft
¾ nm	135.6 ft	27.1 ft
1 nm	180.8 ft	36.2 ft
2 nm	361.7 ft	72.3 ft

Source: "Landing Signal Officer Reference Manual", Virginia Beach, Virginia, United States Navy Landing Signal Officer School, Sep 1991.

The top four optical cells of the FLOLS utilize lenticular lenses which are colored aviation yellow during manufacture. This helps reduce sun glare from the facets and also eliminates the need for a yellow light filter, which would attenuate the light. The lenticular lens covering the bottom cell is colored aviation red for the same reasons. The red color also allows approaching pilots to distinguish a low meatball condition at increased distances from the lens. The bottom cell has an optional flashing feature which is also designed to direct the pilot's attention to the below glideslope state of the aircraft.

Roll Angle vs H/E

The optical cell assembly is capable of being tilted about two horizontal axes at right angles to one another. These axes approximate the pitch and roll axes of the carrier. Tilting the lens in pitch changes the previously discussed basic angle and is normally adjusted by tower personnel to a preset value of 3.5, 3.75, or 4.0 degrees (figure 22).

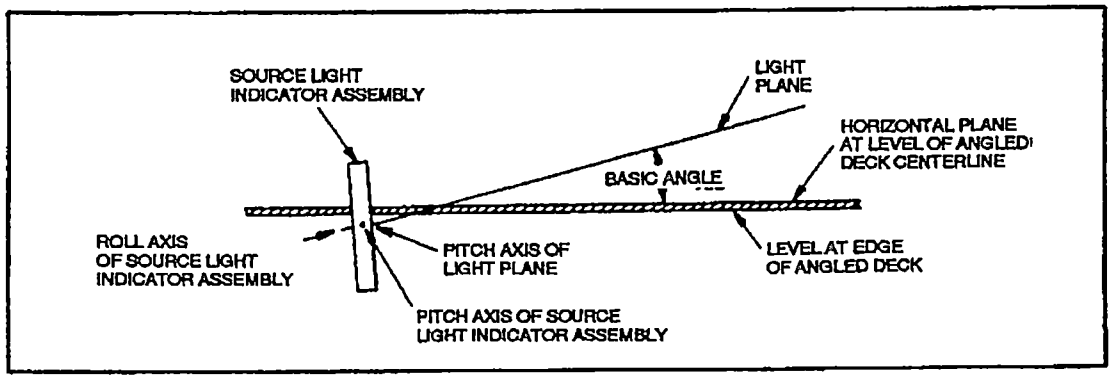

Figure 22
DETERMINATION OF BASIC ANGLE

Source: "NATOPS Landing Signal Officer Manual", Washington, D.C., Chief of Naval Operations, 01 Nov 1997, (NAVAIR 00-80T-104).

By tilting the lens in the roll axes, the glideslope at the center of the angle deck can be raised or lowered while remaining parallel to the unit's basic angle (figure 23). This is done to accommodate the varying H/E values of different aircraft. Rolling the lens to the appropriate setting allows different aircraft to fly identical hook paths to the same HTDP, as shown in figure 24. The appropriate roll setting is calculated by the FLOLS static setting computer once the desired aircraft, basic angle, and HTDP information has been set.

Stabilization

The FLOLS stabilization system is known as the Carrier Landing Aid Stabilization System (CLASS). It receives input from the ship's gyros in order to compensate for pitch, roll, and heave, and to project a stable glideslope under moving deck conditions. The system consists of two identical channels of stabilization complete with gyro/sensor units, electronic computers, monitoring circuits, built-in maintenance facilities and automatic trim stabilization units. CLASS automatically corrects lens settings for static mistrims of the ship. Three modes of FLOLS stabilization are available.

Point Mode

The point mode of stabilization is a backup mode and produces an optical glidepath that is stabilized at a single point in space. This point, depicted in figure 25, is located 2,500 ft aft of the source and in the same vertical plane as the landing area centerline. Because it is stabilized at only one point, the glideslope appears to move up and down with motions of the ship. These motions increase as the aircraft approaches

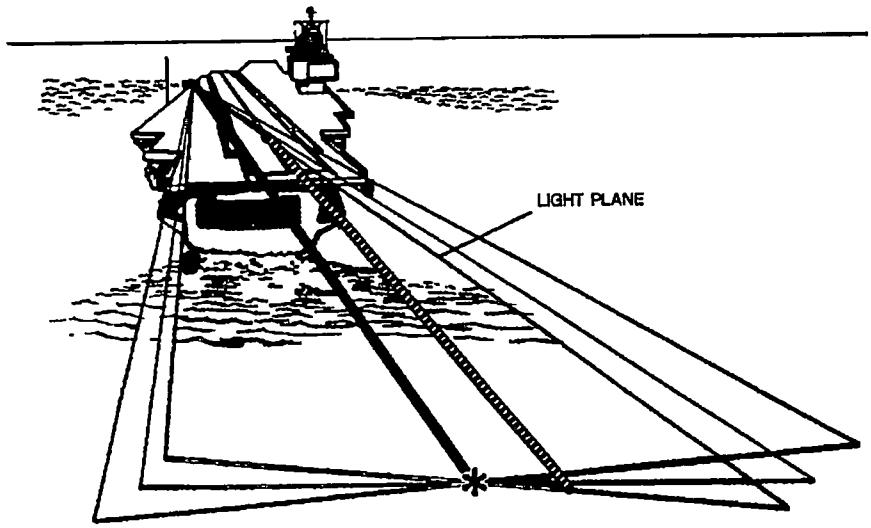

Figure 23
EFFECTS OF ROLL ANGLE CHANGE ON LIGHT PLANE

Source: "Landing Signal Officer Reference Manual", Virginia Beach, Virginia, United States Navy Landing Signal Officer School, Sep 1991.

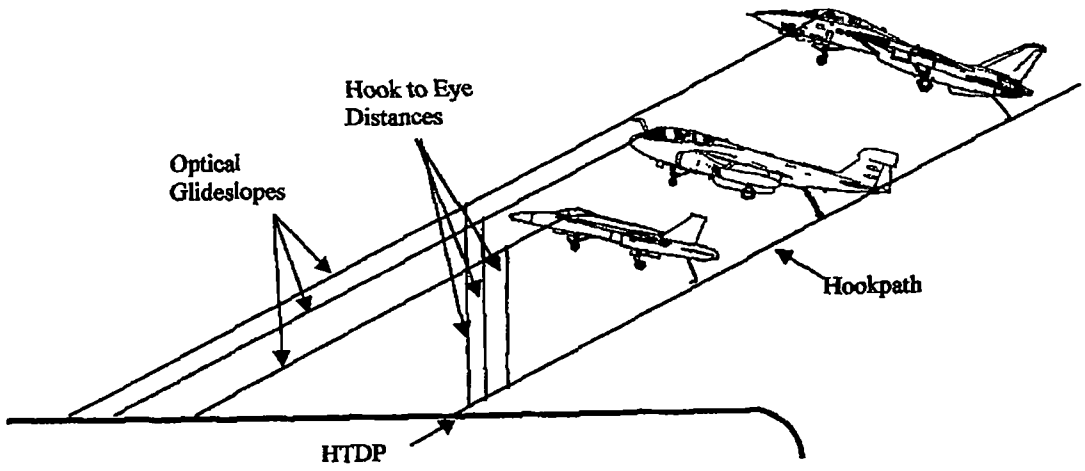

Figure 24
VARYING H/E VALUES FLOWN TO CONSTANT HTDP

Source: Adapted from "Landing Signal Officer Reference Manual", Virginia Beach, Virginia, United States Navy Landing Signal Officer School, Sep 1991.

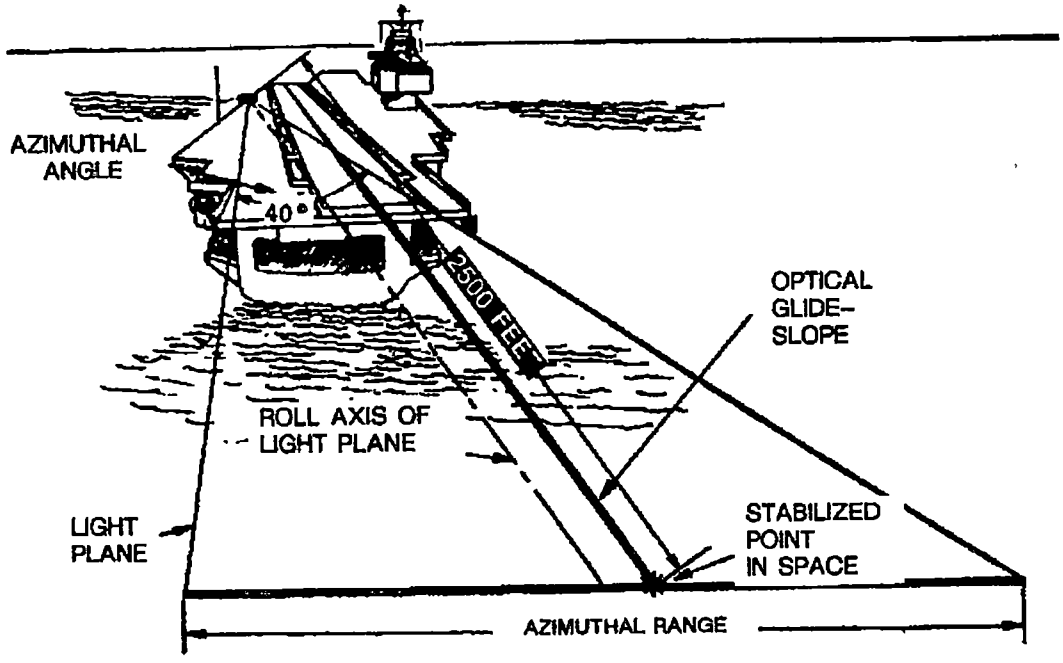

Figure 25
CHARACTERISTICS OF A POINT-STABILIZED LIGHT PLANE

Source: "Landing Signal Officer Reference Manual", Virginia Beach, Virginia, United States Navy Landing Signal Officer School, Sep 1991.

touchdown and are shown in figure 26. Point mode only compensates for ship's pitch and roll about the lens's pitch axis.

Line Mode

Up until the early 1990's, the line mode of stabilization was the normal mode of operation for the FLOLS. Line mode utilizes an analog-scaled model of the ship to produce signals which, through electronic circuitry, drive the indicator unit to correct for roll and pitch with separate drives. The result is the ability to maintain a predetermined line in space at the intersection of the FLOLS light plane and the true vertical plane through the centerline of the angle deck. Line mode, depicted in figure 27, provides a completely stabilized glideslope from the time the pilot first acquires the lens until touch

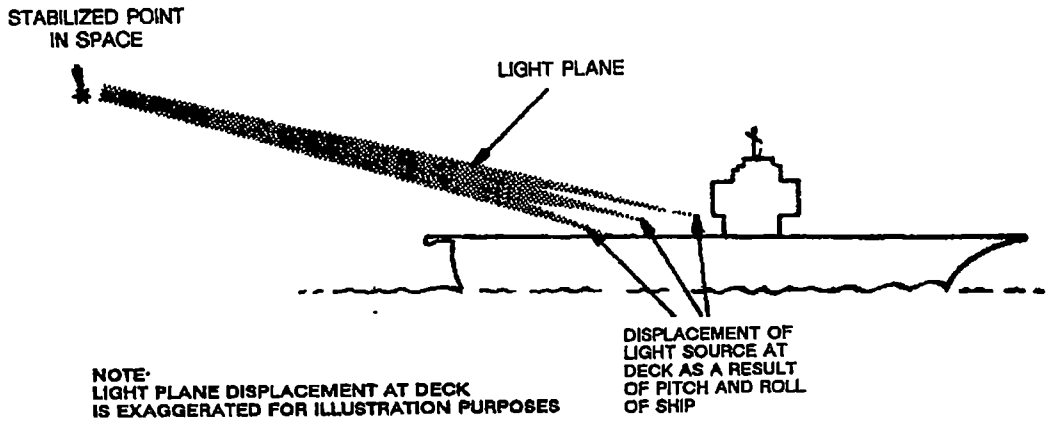

Figure 26
DISPLACEMENT OF LIGHT SOURCE DURING POINT MODE OPERATION

Source: "Landing Signal Officer Reference Manual", Virginia Beach, Virginia, United States Navy Landing Signal Officer School, Sep 1991.

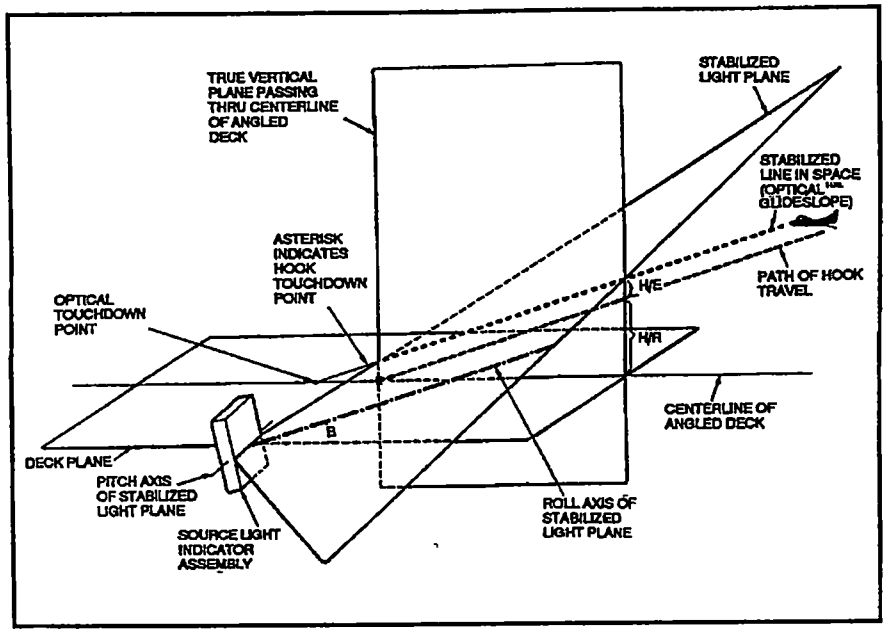

Figure 27
LINE MODE OF FLOLS STABILIZATION

Source: "NATOPS Landing Signal Officer Manual", Washington, D.C., Chief of Naval Operations, 01 Nov 1997, (NAVAIR 00-80T-104).

down, as long as the aircraft remains on the angle deck centerline. Ship's heave is not compensated for in the line mode. Ball movement due to ship's motion is the result of either heave or the motion exceeding the limits of stabilization or rate of motion compensation.

Inertial Mode

In 1991, the Navy began to incorporate on all aircraft carriers the current mode of stabilization for the FLOLS. The inertial mode is the same as line mode, but also incorporates and corrects for ship's heave. All corrections for heave are accomplished via the unit's roll drive mechanism. Like the line mode, inertial mode only provides correct glideslope information when the aircraft is on centerline of the angle deck. H/R clearance and HTDP vary more with inertial mode than line mode. During high sea states, H/R may temporarily be negative and HTDP may actually be aft of the ship's round-down while the FLOLS compensates for heave. This is the trade-off for providing a more stable glideslope to pilots.

Stabilization Limitations

Stabilization limits for the MK6 MOD3 FLOLS are provided in table 5.

Table 5
MK6 MOD3 FLOLS Stabilization Limits

Stabilization Mode	Pitch Limit	Roll Limit
Point	±6°	±10°
Line	±6°	±10°
Inertial	Unlimited	Unlimited

Source: "Landing Signal Officer Reference Manual", Virginia Beach, Virginia, United States Navy Landing Signal Officer School, Sep 1991.

The roll limits may be effectively reduced depending on what type of aircraft is selected. An additional stabilization feature limits the angle between the flight deck and the glideslope to no less than one degree. For example, when utilizing a 3.5° basic angle, the pitch stabilization stops when the ship reaches 2.5° stern up. During typical pitching deck situations, it is this one degree limit, vice the actual stabilization limit, that results in the lens "lagging" the flight deck movement.

Limitations of the System

The FLOLS, although state-of-the-art when introduced, is encumbered by several limitations. Some of the problems are inherent in the design itself, while others are due to the age and composition of its components.

Effects of Temperature

Changes in the internal cell temperature of the FLOLS will produce appreciable changes in the optical characteristics of the system. The cells are designed to be maintained at an operational temperature of 100 ± 3°F. Heating elements are used in each cell to maintain this range. On the flight deck, however, the FLOLS is frequently exposed to jet engine exhaust which can reach temperatures as high as 700 to 800 °F. If the cells reach temperatures outside the operating range, the LSO Reference Manual discusses three distinct effects which will be observed.

1) Changes in temperature will cause a change in the size of the light bar as it moves from the center of the cell to the transition lines between cells. If the temperature is too hot, the bar of light will decrease in size when centered in the cell, and then bloom when approaching the edges. If the temperature is too low, the opposite effect will take place.

2) At extreme temperatures outside of the operational range, the bar of light may vanish or appear as two separate light bars at the transition areas between cells.

3) At higher than design temperatures, the light bar is wider, resulting in a less well defined ball. Lower temperatures reduce the size of the ball, making it more difficult to see. The FLOLS system is considered out of tolerance when the temperature is below 90°F or above 135°F. Due to the Fresnel lens' construction of lucite, an "eggshell" backing is used to prevent the lens from warping due to temperature variations. If the clamps holding this "eggshell" are over-tightened, the lens will warp and transition problems will result.

Sensitivity

As was stated in table 4, the height of the center cell at ¾ of a mile is 27.1 ft, and decreases linearly as the distance to the lens decreases. This large height makes precise ball-flying very difficult until relatively close to touchdown. The end result is that pilots end up reacting to the meatball movement rather than actively controlling it's position. The difficulty in detecting ball movement results in delays in establishing the correct ROD during approaches and culminates in larger glideslope deviations closer to touch down.

Maintainability

The FLOLS and it's components are 1950's technology operating into the year 2000. The system is becoming increasingly more difficult and costly to maintain. The original manufacturer of the optical cell assemblies has since gone out of business. A new company was put under contract to build replacement cells, but the cost increase has been substantial and the quality of the cells is not as good as the originals. Shore-based

FLOLS units have been rendered inoperable as their cells have been cannibalized for use on carrier-based FLOLS units. The large servo motors used to move the entire indicator assembly also require more frequent and extensive maintenance due to their age.

CHAPTER 3

IFLOLS DESCRIPTION

GENERAL

The IFLOLS was designed to replace the FLOLS by providing enhanced visual glideslope guidance from ¾ nautical miles to touchdown. Operability and maintainability were also targeted for improvement by incorporating state-of-the-art components and technology into the system. Procedures and controls for operating and flying with the system were kept as similar as possible to facilitate minimal pilot and LSO adaptation when transitioning from the FLOLS to the IFLOLS. The IFLOLS, like the FLOLS, consists of a deck edge display unit, and control units located in the carrier's control tower, the lens control room, and on the LSO platform.

The IFLOLS deck-edge assembly, pictured in figure 28, consists of an indicator assembly, datum light arm assemblies and wave-off/cut light assemblies. The 72-in vertical indicator assembly consists of twelve electro-optic cell assemblies. The top ten cells are yellow, while the bottom two are colored red in order to provide an additional cue of an unsafe below-glidepath condition. Each datum arm is comprised of ten green lamps arranged in a thin horizontal bar. The wave-off light assembly consists of four emergency wave-off lights and three normal wave-off lights on either side of the indicator assembly. All seven lights, colored red, come on during normal IFLOLS operations and are used to signal an incoming aircraft to discontinue an approach. The emergency wave-off lights are also powered by a separate electrical source and can still be activated in the event of an IFLOLS power failure. Four green cut lights are located

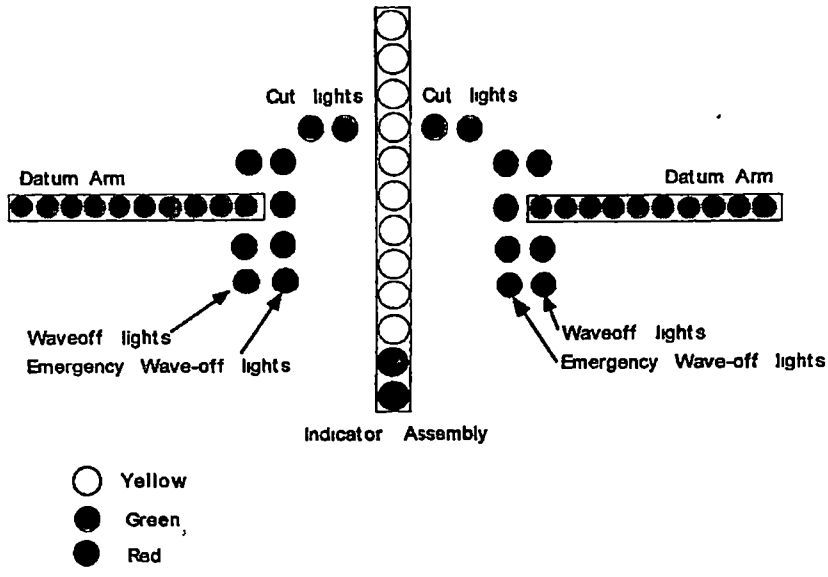

Figure 28
IFLOLS DECK EDGE ASSEMBLY

Source: Evaluation of the Improved Fresnel Lens Optical Landing System, Naval Air Warfare Center, Patuxent River, Maryland, 01 May 1997, (NAWCADPAX--97-90-RTR).

above and inboard of the wave-off lights and are utilized by the LSO to communicate with the pilot during no-radio operations.

LENS SYSTEM

Each of the twelve optical cells in the indicator display contains a lens and a stabilized optics table (SOT) assembly. Each SOT assembly is mounted through bearings to stabilization interfaces on each side of the display. Unlike the three source lights utilized in the FLOLS, the IFLOLS source light consists of a single 80 watt, low voltage, high intensity quartz lamp located at the back of each cell. A reflector located behind the lamp reflects the light forward through a dichroic filter into a fiber optic block. Only visible light is reflected forward, while infrared light, or heat, is passed through the

reflector where it is dispersed by a heat pump. The dichroic filter is an interference filter that passes only a narrow band of colors to make either red or yellow. Unlike an absorption filter, which absorbs light energy, the dichroic filter reflects all other colors, resulting in a highly efficient filter which remains cool. The dichroic filter focuses the light onto the fiber optic block, which consists of a bundle of 0.002-in optic glass fibers formed at a circle at the entrance and spread out to a slit at the exit end. The light travels through the individual fibers to the image source at the exit end. From the fiber optic block, the light enters a sealed optical compartment, which is filled with desiccant to absorb moisture. The light is magnified by a multi-element glass lens (corrected for spherical and chromatic aberrations) and then exits the indicator assembly. Figure 29 presents a simplified optics system diagram.

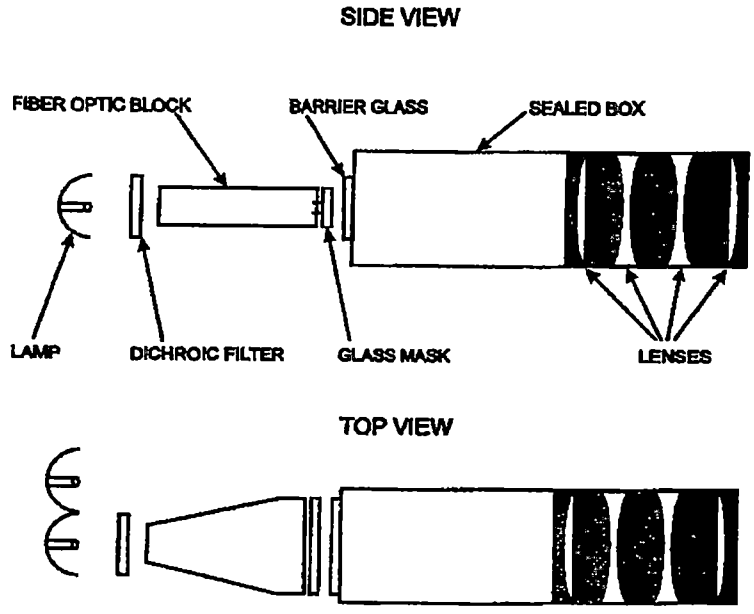

Figure 29
IFLOLS SIMPLIFIED OPTICS SYSTEM DIAGRAM

Source: Organizational Maintenance/Theory of Operation: Improved Fresnel Lens Optical Landing System (IFLOLS), NAVAIR 51-40ABA-21, 01 October 1997.

The vertical coverage of the top ten yellow cells is 0.13 deg each, while each of the bottom two red cells provide 0.20 deg of coverage. The system is designed to match the FLOLS elevation and azimuth coverage of 1.7 and ±20 deg, respectively. By increasing both the size of the indicator assembly and number of cells, the designers were able to increase the IFLOLS sensitivity to 1.3 archmin/in, vice the FLOLS sensitivity of 2.05 archmin/in. The designers were also able to eliminate the lenticular lens used in the FLOLS by utilizing a single bulb for the source and using the dichroic lens to provide the red and yellow cell coloring.

STABILIZATION

In addition to providing improved sensitivity, IFLOLS was also designed to better compensate for ship's motion. Like the FLOLS, the system utilizes the Inertial Mode as the primary stabilization mode, with the Line Mode as a backup. Point Mode of stabilization is not available with the IFLOLS.

Unlike the FLOLS, which provides stabilization by mechanically rolling the entire indicator assembly, the IFLOLS stabilization is performed by moving only the internal optical elements. This eliminates the need for the large pitch and roll mechanisms required on the FLOLS. Figure 30 shows how the SOT's are connected to port and starboard vertical linear slides/shafts. Each shaft is driven by a brushless DC motor through a ball screw housing assembly.

Pitch stabilization of the system is accomplished by moving the port and starboard drive shafts up and down in unison. Because each SOT is rigidly connected to both drive shafts, all twelve tables move together. The amount of shaft travel is determined by the

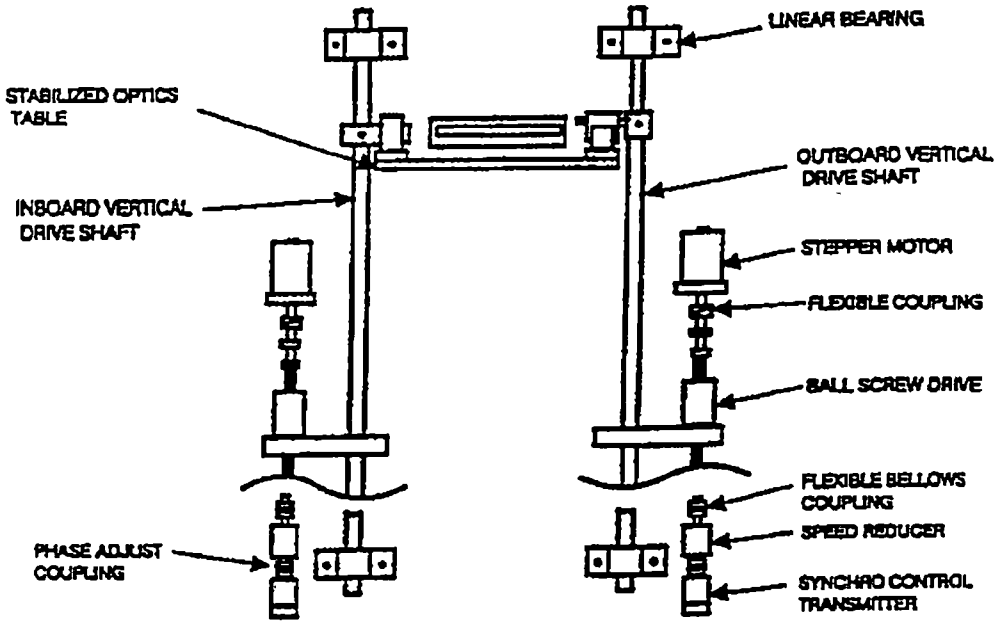

Figure 30
SIMPLIFIED IFLOLS STABILIZATION MECHANICS DIAGRAM

Source: Evaluation of the Improved Fresnel Lens Optical Landing System, Naval Air Warfare Center, Patuxent River, Maryland, 01 May 1997, (NAWCADPAX--97-90-RTR).

ship pitch and roll inputs to the system. The shafts move approximately 0.3 in per degree of ship's pitch movement. Roll stabilization is also accomplished by moving the shafts, however, the port and starboard units are moved differentially. By moving one shaft up and the other down, the presentation can be rolled with no change in pitch. The SOT's slide on a linear bearing to compensate for the increase in distance between the shafts when the tables are tilted. Heave stabilization is accomplished by measuring the ship's acceleration in the vertical direction, resolving for angular effects due to pitch and roll, and integrating twice to yield displacement. This displacement is then used to calculate a lens roll angle and in turn a drive system linear translation.

Ship's pitch and roll inputs to the IFLOLS stabilization system are provided by either the Ship's Inertial Navigation System (SINS), MK-19 gyro, or AN/SPN-46 gyro. The SINS and MK-19 are the primary sources, while the AN/SPN-46 is used as a backup. Ship's heave is provided by a dedicated IFLOLS z-accelerometer, with the AN/SPN-46 accelerometer again used as a backup. Like the FLOLS, additional operator inputs to the system are basic angle, aircraft H/E, and commanded HTDP.

The IFLOLS stabilization algorithm uses a look-up table for non-linear components (ship's pitch and roll and selected basic angle.) The look-up table uses the ship's survey data as input and calculates the location of the lens and two points in space with relation to the ship's metacenter. It then calculates light plane pitch and roll for each pitch and roll movement of the ship. For linear components (ships heave, HTDP and H/E) the algorithm utilizes a roll of the lens. After breaking each component down into a roll input, the results are added or subtracted to the roll component from the non-linear components. These final light plane pitch and roll inputs are then converted to shaft motions and sent to the deck edge display unit. (NAWCADPAX—97-117-RTR)

STABILIZATION DESIGN CRITERIA

Sea State is an environmental measurement that takes into consideration wind and sea conditions. Appendix Table 1 presents the full table used to calculate Sea State. The IFLOLS Operational Requirements Document (ORD) required a threshold of Sea State 4 for IFLOLS operation with a goal of Sea State 5. The IFLOLS was designed to operate in a condition of 1.86 times greater than Sea State 5. The goal, threshold, and design peak-to-peak limits are given in Table 6.

Table 6
IFLOLS Stabilization Limits

	Goal (Sea State 5)	Threshold (Sea State 4)	Design (Sea State 5 x 1.86)
Roll	3.82 deg	3.19 deg	7.12 deg
Pitch	0.56 deg	0.26 deg	1.04 deg
Heave	2.68 ft	1.43 ft	4.98 ft

Source: Evaluation of the Improved Fresnel Lens Optical Landing System, Naval Air Warfare Center, Patuxent River, Maryland, 01 May 1997, (NAWCADPAX--97-90-RTR).

The ORD defines the stabilization accuracy in arcmin for pitch and roll, and ft for heave. These numbers were translated to ramp displacement, and the IFLOLS was then designed to a total displacement at the ramp error which met or exceeded these numbers. Table 7 presents the IFLOLS stabilization accuracy criteria.

RELIABILITY/MAINTAINABILITY

The IFLOLS Operational Requirements Document (ORD) defined several Minimum Acceptable Operational Performance Requirements and Critical Test Parameters for the system.

Minimum Visual Glideslope Display Range

When measured from flight deck touchdown point, the minimum visual glideslope display range was assigned a threshold (minimum) value of 0.75 NM and an objective value of 1.0 NM.

Mean Time To Repair

Mean Time To Repair (MTTR) is a basic measure of maintainability. It is defined as the average time it takes to fully repair a failed system and usually includes fault detection, fault isolation, removal and replacement of the failed item, and system

Table 7
IFLOLS Stabilization Accuracy

Requirement	Goal		Threshold		Design
		Displacement at the ramp		Displacement at the ramp	Displacement at the ramp
Roll	10 arcmin	0.25 ft	20 arcmin	0.50 ft	
Pitch	10 arcmin	1.41 ft	20 arcmin	2.82 ft	
Heave	1 ft	1.00 ft	2 ft	2.00 ft	
Total Displaced Error		2.66 ft		5.32 ft	2.00 ft
Ramp Motion	300 ft/min		200 ft/min		400 ft/min

Source: Evaluation of the Improved Fresnel Lens Optical Landing System, Naval Air Warfare Center, Patuxent River, Maryland, 01 May 1997, (NAWCADPAX--97-90-RTR).

checkout. It is calculated by taking the sum of corrective maintenance times and dividing it by the total number of failures within an item. The ORD specified a maximum MTTR for the IFLOLS of 1.5 hrs.

Operational Availability

The operational availability threshold/objective value was greater than or equal to 0.95. Operational Availability is defined in equation 4.

$$A_o = \frac{U}{U+D} \qquad \text{(equation 4)}$$

where:
- A_o: Operational Availability
- U: Uptime (that time when the system is considered to be ready for use and is either operating, in stand-by or off)
- D: Downtime (that time when the system is down for repair of critical hardware failures and/or restoration from mission critical faults)

System Mean Time Between Mission Critical Failure

System Mean Time Between Mission Critical Failure ($MTBMCF_{SYS}$), defined as a failure which prevents the system from completing its mission, was assigned a threshold value of greater than or equal to 347 hours. $MTBMCF_{SYS}$ is defined in equation 5

$$T_{SYS} = \frac{T_{OH}}{F_{MC}} \qquad \text{(equation 5)}$$

where. T_{SYS}: System Mean Time Between Critical Failures ($MTBMCF_{SYS}$)
T_{OH}: Total Operating Hours
F_{MC}: Number of Mission Critical Failures

Built-In-Test (BIT) Capability

The IFLOLS system has an inherent Built-In-Test capability which can detect and isolate faulty components. BIT capability can be divided into three separate areas. Fault Detection (F_{DET}) is a measure of the BIT's capability to detect failures/faults and is calculated as in equation 6.

$$F_{DET} = \frac{N / F_{COR}}{N_{ACT} / F} \qquad \text{(equation 6)}$$

where: F_{DET}: Fault Detection
N: Number of Failures
F_{COR}: Software Faults Correctly Detected by BIT
N_{ACT}: Number of Actual System Failures
F: Faults

The F_{DET} threshold/objective value given in the ORD for the IFLOLS was greater than or equal to 0.80.

Fault Isolation (F_I) is a measure of the BIT's capability to isolate the failure to a specified replacement assembly and is calculated as in equation 7.

$$F_I = \frac{F_{ISO}}{F_{CD}} \qquad \text{(equation 7)}$$

where: F_I: Fault Isolation
F_{ISO}: Number of Failures Correctly Isolated
F_{CD}: Total Number of Failures Correctly Detected by BIT

The F_I threshold/objective value was set as greater than or equal to 0.90.

False Removal Rate (F_{FAR}) is the probability that a weapons replaceable assembly (WRA) will be removed due to the BIT indicating a failure when none has occurred. Given that a WRA will be removed whenever BIT indicates a failure, F_{FAR} is calculated as in equation 8.

$$F_{FAR} = \frac{B_I}{B_T} \qquad \text{(equation 8)}$$

where: F_{FAR}: False Removal Rate
B_I: Number of Incorrect BIT Failure Indications
B_T: Total Number of BIT Failure Indications

The F_{FAR} threshold/objective value was set at less than or equal to 0.10 for the IFLOLS.

CHAPTER 4

IFLOLS EVALUATION

GENERAL

The IFLOLS was evaluated through a series of planned Developmental Test (DT) and Operational Test (OT) events over a course of approximately one and a half years. Test results were compared against requirements spelled out in both the ORD and a Test and Evaluation Master Plan (TEMP). Shore-based testing was completed with a prototype land-based IFLOLS unit (shown in figure 31) at three different airfields. Ship-based testing was performed on a single aircraft carrier utilizing a prototype shipboard compatible unit (shown in figure 32). A second shipboard compatible unit was utilized to evaluate IFLOLS function and performance, stabilization, Electro Magnetic Interference (EMI), environmental effects, and reliability and maintainability. Both developmental and operational test pilots and non-test pilots flew with the IFLOLS throughout the course of the evaluation The author took no part in any of the evaluation process.

NAWCAD classifies deficiencies as either Part I, Part II, or Part III. Part I indicates a deficiency which adversely affects safety of flight or mission accomplishment. Part II is of lesser severity than Part I, but correction of which will result in significant improvement in effectiveness, reliability, maintainability, or safety. Part III indicates a minor deficiency which should be avoided in future designs. An enhancing characteristic is one which is a significant improvement and should be incorporated in future designs. (NAWCADPAX—97-117-RTR)

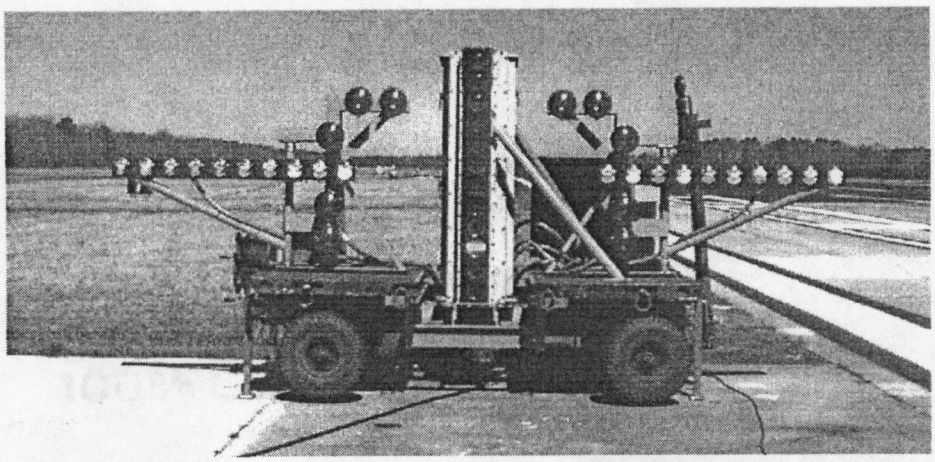

Figure 31
PROTOTYPE LAND-BASED IFLOLS UNIT

Source: Evaluation of the Improved Fresnel Lens Optical Landing System, Naval Air Warfare Center, Patuxent River, Maryland, 01 May 1997, (NAWCADPAX--97-90-RTR).

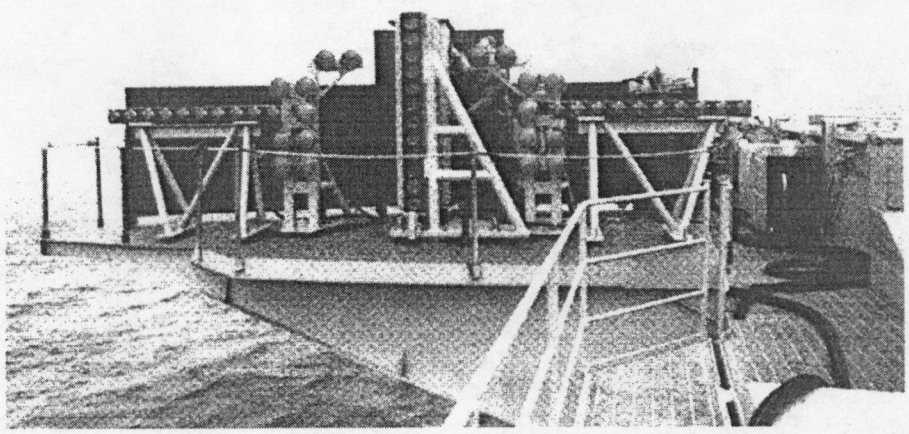

Figure 32
PROTOTYPE SHIPBOARD COMPATIBLE IFLOLS UNIT

Source: Evaluation of the Improved Fresnel Lens Optical Landing System, Naval Air Warfare Center, Patuxent River, Maryland, 01 May 1997, (NAWCADPAX--97-90-RTR).

DT-IIA

Methodology

Initial shore-based testing was performed during the Developmental Test IIA (DT-IIA) phase at NAS Patuxent River in Maryland. A total of 122 day approaches were flown with F/A-18A, S-3B, and AH-1W aircraft. 83 night approaches were flown using the F/A-18A and S-3B platforms only. The AH-1W was used to verify the IFLOLS vertical and horizontal coverage envelopes. The F/A-18A and S-3 were flown to familiarize pilots with the characteristics of the IFLOLS and also to evaluate system performance, visual utility, compatibility with electronic landing aids (ELA), and human factors aspects. Upon completing each flight, pilots answered a questionnaire with numerically weighted responses. The pilot rating scale used for responses is shown in Table 8. A flight test engineer and an LSO kept flight logs detailing time, winds, aircraft type, weather, and pilot comments for each pass. All aircraft were tracked by a field-based AN/SPN-46 radar to record glideslope and lineup position data. This data was recorded on a Data Acquisition System (DAS) and downloaded for post-flight evaluation.

Table 8
Pilot Questionnaire Rating Scale

Rating	Meaning
1	Unsatisfactory. This component of the IFLOLS needs to be redesigned and/or rethought
5	Satisfactory. This component of the IFLOLS is usable as is, but could be made better
10	Enhancing. Don't touch this aspect of the IFLOLS!

Source: Evaluation of the Improved Fresnel Lens Optical Landing System, Naval Air Warfare Center, Patuxent River, Maryland, 01 May 1997, (NAWCADPAX--97-90-RTR).

Results

System Familiarization

Although there was an expected transition period when first flying the IFLOLS, the aviators who flew the evaluations rapidly adjusted to the increased sensitivity and different look of the system. Average time to feel comfortable with the IFLOLS was rated as 3 to 5 approaches, while gaining confidence with the system only required an additional 3 to 5 passes.

System Performance

The azimuth and elevation coverages of 1.7 deg and ±20 deg, respectively, met the requirements set forth in the TEMP. The transition between the yellow and red cells in the lower quarter of the indicator assembly also concurred with the TEMP requirement of 0.45 deg below glideslope. Pilots found the source light to be clear and distinct during both day and night operations. The source and datums were clearly visible at 1.5 NM, which was twice the ¾ of a mile requirement in the TEMP.

Pilots discovered that when flying the IFLOLS at low sun angles, the red source cells were hard to chromatically distinguish from the yellow source cells. This would delay a pilot's correction from a below-glidepath condition and was considered a Part II deficiency. A recommendation was made to match the frequency of the IFLOLS red and yellow cells to that used on the FLOLS.

A lighting issue was discovered involving the placement of the cut lights in relation to the datums. During normal operations, a pilot "calls the ball" at ¾ of a mile, or when he can distinguish it enough to fly it. The LSO "rogers" the ball-call and also makes any subsequent power, attitude, or line-up calls over the radio. During "zip-lip" or

"no radio" (NORDO) operations, radios are only used in emergencies and the LSO utilizes the cut lights to communicate with pilots. When the LSO is reasonably sure that the pilot can see and fly the ball, he illuminates the cut lights continuously for 2 to 3 seconds to indicate "roger ball." Any cut lights that the pilot sees after the "roger ball" indicate that the LSO wants an addition of power on the airplane.

The initial IFLOLS configuration, Configuration 1, is shown in figure 33, and consisted of two cut lights on either side of the indicator assembly. The cut lights were equipped with 300-watt light bulbs and were positioned side-by-side in vertical alignment with the wave-off light columns. Although the wave-off lights were clearly visible from 1.5 nm and closer, pilots could not distinguish the IFLOLS cut lights from the datum lights at ¾ of a mile. Separation was not evident until inside 1/4 of a mile. This could lead to potentially dangerous situations during zip-lip operations. A pilot who does not see the initial "roger ball" cut light signal may mistake a subsequent "power" cut light signal for "roger ball." By not adding power when the LSO calls for it, the aircraft may become too low for a safe approach and get "waved off" by the LSO to try again.

A modification to the arrangement resulted in Configuration 2, shown in figure 34. Configuration 2 also consisted of two cut lights on either side and utilized 300-watt bulbs. The positioning was changed to shift the entire wave-off/cut light cluster up one light position with respect to the datums. The outer cut light was shifted in towards the display assembly to be in vertical alignment with the emergency wave-off lights. Although this increased the separation between the datum lights and the cut lights, the two remained indistinguishable to pilots until inside 1/2 of a mile.

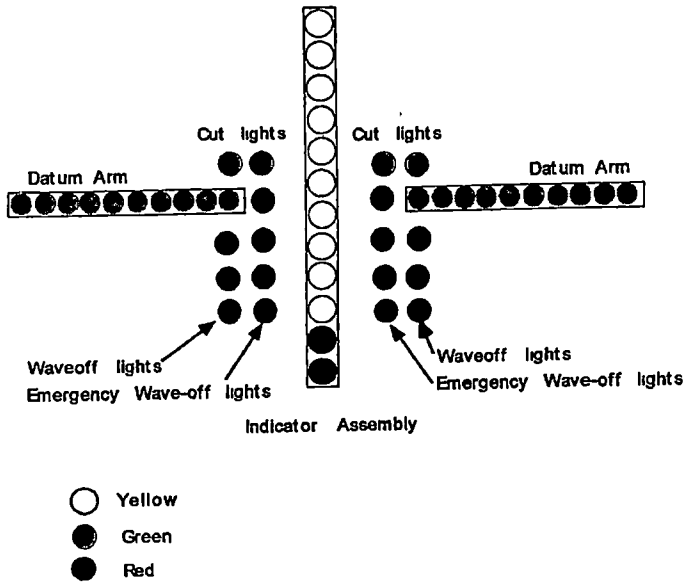

Figure 33
IFLOLS CUT LIGHT CONFIGURATION 1

Source: Evaluation of the Improved Fresnel Lens Optical Landing System, Naval Air Warfare Center, Patuxent River, Maryland, 01 May 1997, (NAWCADPAX--97-90-RTR).

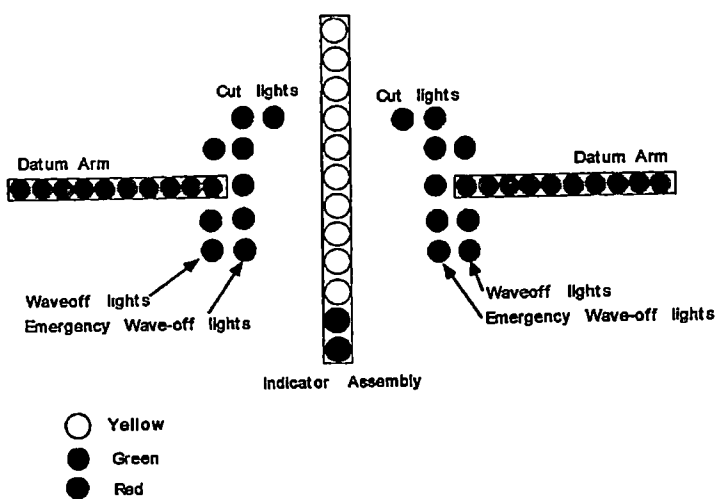

Figure 34
IFLOLS CUT LIGHT CONFIGURATIONS 2 & 3

Source: Evaluation of the Improved Fresnel Lens Optical Landing System, Naval Air Warfare Center, Patuxent River, Maryland, 01 May 1997, (NAWCADPAX--97-90-RTR).

The wattage of the cut lights was then increased from 300 to 399 while leaving the positioning the same. This third attempt, shown in figure 34 and known as Configuration 3, was barely visible at ¾ of a mile. The physical separation, however, was marginal, and the intensity separation was unsatisfactory. The inability to distinguish the cut lights from the datums was reported as a Part I deficiency and a recommendation was made to rectify the problem prior to operational deployment of the system.

Visual Utility

Glideslope sensitivity was evaluated by pilots setting up off-nominal approaches outside of ¾ of a mile, and then attempting corrections once reaching ¾ of a mile. The approaches were initially made starting from either above and below glidepath, left or right of centerline, or above or below optimum approach speed. The variables were then combined during approaches (4 balls high and high approach speed, 3 balls low and right of centerline, etc.)

The average pilot rating for correcting from off-nominal approaches was between 8 and 9. Pilots found that the increased sensitivity of the IFLOLS outside of ¼ of a mile allowed them to make smaller power and attitude corrections to control glideslope. The increased sensitivity outside of ¼ of a mile was listed as an Enhancing characteristic.

During early approaches, both pilots and LSO's noted a tendency to over-control glideslope inside of ¼ of a mile due to the increased sensitivity. Corrections were being made by adjusting nose attitude instead of power. As pilots became more familiar with the system, however, the number and intensity of corrections inside ¼ of a mile decreased.

Compatibility With Electronic Landing Aids (ELA)

With the IFLOLS glideslope and touchdown point matched up with the AN/SPN-46 radar parameters, pilots flew fully coupled approaches to evaluate ELA compatibility. The transition from an instrument (heads down) scan to the IFLOLS visual cues (heads up) was found to be satisfactory and very similar to the instrument to FLOLS transition.

Human Factors

To evaluate human factors aspects of the IFLOLS, an F/A-18 flew day approaches, alternating between the FLOLS and the IFLOLS as the primary visual landing aid. The aircraft was tracked with the AN/SPN-46 precision tracking radar to compare the performance of the pilot while flying both systems.

Post flight analysis and correlation of the radar and pilot comments showed that when flying the FLOLS, the source was not flyable until ¾ of a mile. Large corrections began immediately and continued until ¼ of a mile. With the IFLOLS, however, the source was acquired between 1.3 and 1.5 miles, which allowed a pilot to begin making corrections sooner in the approach. The results showed that at ¾ of a mile, the IFLOLS approach was much closer to the correct glideslope than the FLOLS approach, and that by ½ mile, the deviations from glideslope using IFLOLS were no more than 5 ft. The increased range allowed pilots to make corrections sooner, and the increased sensitivity let them make smaller, more precise corrections to glideslope. The IFLOLS instilled confidence in both the pilots and LSO's in its ability to provide precise glideslope information.

Conclusions

The IFLOLS system met the critical technical parameters for the shorebased environment. The test team recommended that the system proceed to the developmental shipboard evaluation. The recommendations were also made to correct the chromatic frequency of the red source lights and correct the inability to distinguish between cut and datum lights at ¾ of a mile.

DT-IIB/TECHEVAL

Methodology

The initial shipboard evaluation was completed during the Developmental Test IIB/Technical Evaluation (DT-IIB/TECHEVAL) onboard the USS George Washington (CVN-73). Over a five-day period, a total of 290 day approaches and 92 night approaches were flown by F/A-18A/B, F-14A, S-3B, and E-2C aircraft. Areas of evaluation included system performance, visual utility, and compatibility with ELA. Pilot questionnaires, flight logs, and data tracking were performed in the same manner as for the DT-IIA phase.

Results

System Performance

The optical source of the IFLOLS was found to be satisfactory, and the system was properly stabilized in both line and inertial mode by the SINS and the MK-19 gyro. The visual range of the source, being clearly visible at 1.5 nm, was again confirmed to exceed the requirements of the TEMP. The Part II deficiency generated during DT-IIA of difficulty in distinguishing the yellow and red source lights in shallow sun angles was

resolved by using a more chromatically red filter to increase the contrast between the red and yellow source.

In an attempt to remedy the DT-IIA Part I deficiency of distinguishing between cut lights and datum lights, a new configuration was utilized for the DT-IIB evaluation. Configuration 4, shown in figure 35, moved the cut lights higher and closer to the indicator assembly, providing 21 inches of separation from the datum lights. A higher wattage bulb was also incorporated which was designed for an initial rise and overshoot to full intensity prior to leveling out at the preset level. Test results showed the cut and datum lights in this configuration to be marginally distinguishable at ¾ mile. Eventually a black-colored backdrop was installed on the IFLOLS behind the datum and cut lights that allowed pilots to distinguish between the two.

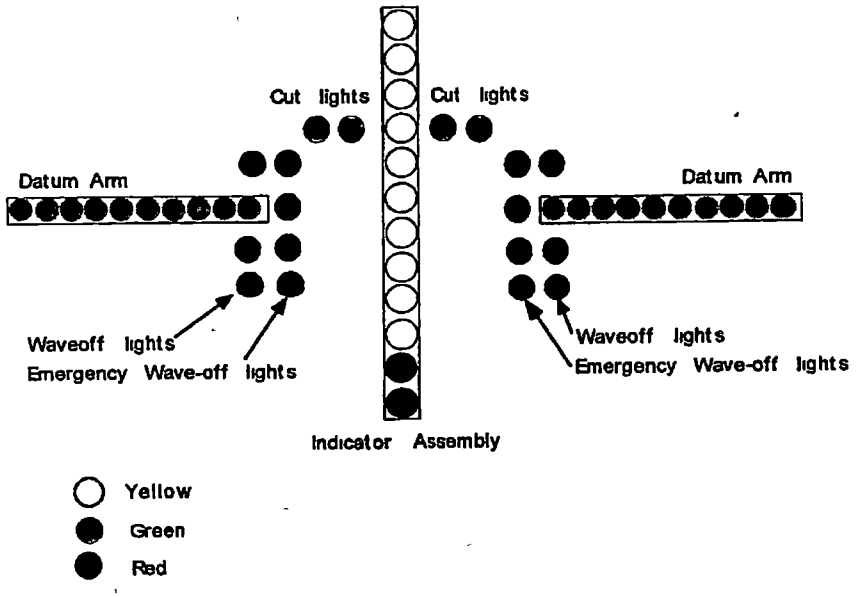

Figure 35
IFLOLS CUT LIGHT CONFIGURATION 4

Source: Evaluation of the Improved Fresnel Lens Optical Landing System, Naval Air Warfare Center, Patuxent River, Maryland, 01 May 1997, (NAWCADPAX--97-90-RTR).

Although this configuration solved the problem of distinguishing between cut and datum lights, the increased intensity of the bulbs created a different problem. When activated, the cut lights washed out the source if it was in the upper quarter of the indicator display. A pilot correcting from an above glideslope condition when receiving a "roger ball" or "power" call via cut lights would temporarily lose sight of the source. This problem was classified as a Part III deficiency.

Visual Utility

The increased sensitivity of the IFLOLS over the FLOLS was more readily apparent at the ship than at the field. The same types of off-nominal approaches were conducted at the ship with similar results. Test pilots were confident of the IFLOLS ability to provide precise glideslope information during both line-up and AOA changes. The increased sensitivity allowed all aircraft types to make small attitude and power changes to control glideslope and was again found to be an enhancing characteristic.

Compatibility with Electronic Landing Aids (ELA)

The transition from an AN/SPN-46 or AN/SPN-41 instrument approach to the IFLOLS was found to be satisfactory for all types of aircraft during the evaluation. It was also verified that for fully coupled approaches to the carrier, the line mode of stabilization results in less ball motion than the inertial mode, and is the recommended mode. This result was similar to FLOLS operations and was anticipated to be the same for IFLOLS.

Conclusions

The IFLOLS met the critical technical parameters for the shipboard environment and the recommendation was made to proceed to operational testing. The

recommendation was also made to incorporate cut-light configuration 4 in the production IFLOLS units.

OT-IIA

Methodology

The initial Operational Test IIA (OT-IIA) was a combined shore-based/shipboard evaluation designed to assess the potential operational effectiveness and potential operational suitability of the IFLOLS. The land-based IFLOLS unit was moved from NAS Patuxent River to NAS Oceana in Virginia. A single operational test pilot flew three Field Carrier Landing Practice (FCLP) periods at Oceana in an F/A-18C. The pilot then flew nine day approaches and five night approaches to CVN-73 with the shipboard compatible IFLOLS installed.

Results

A single problem concerning the IFLOLS configuration presented itself during OT-IIA. The pilot reported that the datum lights were positioned too far away from the indicator assembly to facilitate rapid scanning of the source in relation to the datums. Pilots are taught to scan from one end of the datums to the other to help discern ball movement. The large space between the indicator assembly and the datums tended to slow this scanning process.

Conclusions

The IFLOLS was determined to be potentially operationally effective and potentially operationally suitable. A recommendation was made to correct the position of the datum lights to optimize pilot ability to determine precise glideslope. This recommendation was not able to be incorporated prior to the next phase of the evaluation.

OT-IIB/OPEVAL

Methodology

The final planned evaluation took place during the Operational Test IIB/Operational Evaluation (OT-IIB/OPEVAL) onboard CVN-73. The system was evaluated by operational pilots attached to Carrier Air Wing 1 (CVW-1) during a scheduled six-month deployment. The purpose of OT-IIB/OPEVAL was to determine the operational effectiveness and operational suitability of the IFLOLS, and it's readiness for fleet introduction. The IFLOLS accumulated 4004.3 hours during 14,837 sorties over a 156-day period. CVW-1 operated F/A-18C, F-14A, EA-6B, S-3B, E-2C, C-2A, and SH-60 aircraft during the deployment.

Results

Pilot Monitoring

Operational pilots also disliked the large lateral distance between the datums and the source indicator assembly. The pilot's scan was made more difficult and the ability to discern precise glideslope location was diminished. This was the same deficiency noted in the OT-IIA phase.

Safety

During night operations, the intensity of the cut lights was observed to be much brighter than the rest of the IFLOLS presentation. This made them unusable during NORDO operations. After viewing the cut lights at night, several pilots complained of experiencing temporary blind spots during the approach.

Pilot Performance

CVW-1 demonstrated a marked improvement in pilot performance during OT-IIB/OPEVAL when compared to previous deployments and work-up periods. The number of bolters and wave-off's both decreased, while the number of 3-wire arrestments and the overall boarding rate for the airwing both increased. While environmental conditions and personnel vary from deployment to deployment, airwing pilots and LSO's were confident in attributing the majority of the improvement to the incorporation of the IFLOLS.

Conclusions

The IFLOLS was determined to be operationally effective and operationally suitable. The increased sensitivity and viewing range were both found to be enhancing characteristics. Recommendations were made to decrease the distance between the datums and source light indicator assembly and also to reduce the intensity of the cut lights.

POST OPEVAL

Methodology

Due to the datum spacing deficiency discovered in the OT-IIA evaluation and confirmed in OT-IIB/OPEVAL, the shore-based IFLOLS unit was moved to NAS Oceana's outlying airfield, Naval Auxiliary Landing Field (NALF) Fentress, for a follow-on evaluation. Two developmental test pilots in a two-seat F/A-18B and an operational pilot in an F-14A each flew two FCLP periods (about 30 total approaches) at NALF Fentress to evaluate four different datum arm configurations. Datum arms were initially

set at a baseline configuration, and then were incrementally moved closer to the indicator assembly.

Results

The evaluation was conducted with the original shipboard configuration (cut-light Configuration 4) and three additional configurations. The original shipboard configuration had the inboard datum lights aligned vertically with the outer wave-off lights. Subsequent configurations increased the vertical distance between the middle two wave-off lights so that the datums could be moved closer to the indicator assembly. The second configuration moved the datums in five inches closer, the third ten inches, and the fourth fifteen inches.

Although the pilots found the original configuration of the datums to be satisfactory, they confirmed that it was very difficult to make precise glideslope corrections due to the lateral separation between the datums and the indicator assembly. In this configuration, source movement was more easily referenced with the actual indicator assembly structure than with the datums. The ability to make precise glideslope corrections improved as each subsequent configuration moved the datums closer to the indicator assembly. Moving the datums closer had negligible effects on the previously discussed ability to distinguish the datums from the cut lights. The fourth configuration (15 inches closer) was determined to be the most effective and was recommended for incorporation on production IFLOLS units.

Conclusions

It was determined that the IFLOLS in the fourth configuration (datums 15 in closer to the indicator assembly) was the optimum presentation for making corrections to

glideslope. This configuration was recommended for incorporation into production IFLOLS units.

STABILIZATION DESIGN CRITERIA

Methodology

Throughout the DT-IIB ship evaluation, IFLOLS pitch, roll, and heave stabilization data was collected and time-tagged, along with the same data from the AN/SPN-46 MK-16 shipboard gyro. The MK-16 gyro information was used as a truth source to which the IFLOLS data was compared.

Results

Analysis showed that the IFLOLS stabilization provided a steady IFLOLS presentation throughout an average peak-to-peak deck motion during the last 12.5 seconds of the test approaches of 0.1 deg pitch, 0.06 deg roll, and 0.28 ft heave. The presentation was also steady during a maximum peak-to-peak deck motion during the last 12.5 sec of the test approaches of 0.22 deg pitch, 0.26 deg roll, and 0.7 ft heave. The accuracy of the stabilization was within the ORD requirements of 20 arcmin of ramp motion due to pitch and roll and 2 ft of ramp motion due to heave.

Conclusions

The IFLOLS stabilization was considered satisfactory using both the SINS gyros and the MK-19 gyro as primary stabilization sources. During OT-IIB/OPEVAL, a similar process was used to evaluate the stabilization in higher sea states. During the course of the deployment, however, CVN-73 only experienced a maximum of sea state condition 4. This satisfied the ORD threshold value, but IFLOLS operation at the objective value of Sea State 5 could not be verified.

MAINTAINABILITY/RELIABILITY

Methodology

The second shipboard compatible IFLOLS unit was used to evaluate function and performance, stabilization, Electro Magnetic Interference (EMI), environmental effects, and reliability and maintainability. The testing was performed in parallel with the DT/OT evaluations, and was conducted at both NAS Patuxent River and the Naval Air Warfare Center Aircraft Division (NAWCAD) Lakehurst, NJ. Reliability and maintainability was also evaluated onboard CVN-73 during OT-IIB/OPEVAL.

Results

Electro Magnetic Interference (EMI)

EMI testing was conducted by placing the IFLOLS in a shielded enclosure and subjecting it to numerous radiated magnetic and electric fields. Magnetic and electric field emissions from the unit itself were also evaluated. Only minor modifications were required which resulted in satisfactory completion of all EMI tests.

Environmental

Environmental testing was performed with one axis of stabilization operating to demonstrate operation. Sinusoidal vibration tests were conducted with no problems noted. The IFLOLS unit was subjected to 7 temperature test cycles, each 20 hours in duration, with temperatures ranging from -40°C to 50°C. The IFLOLS passed these tests without any failures. A salt fog evaluation was conducted by exposing the unit to an atomized solution of 5% sodium chloride solution for a period of 48 hours, followed by a 48 hour drying period. This evaluation, along with observations of the shipboard unit on

CVN-73, showed that the IFLOLS is capable of withstanding the harsh sea spray conditions found on the flight deck.

Maintainability

Maintainability was evaluated by inserting random failures, and then timing the detection, isolation, repair, and verification process. Failures were chosen for the demonstration based on criticality to the IFLOLS mission. The procedures used for the demonstration are listed in Appendix table 2. The total times to isolate a failure, remove and replace the part, and verify system operation ranged from 4.10 min to 118.5 min. The MTTR was calculated as 34.5 min, well below the ORD requirements of 1.5 hrs.

Operational Availability/$MTBMCF_{SYS}$/Built-In-Test (BIT) Capability

Throughout the course of the six-month OT-IIB/OPEVAL, the IFLOLS did not experience any failures. The impressive reliability, however, renders several evaluation calculations unusable. Table 9 presents the quantitative test results from the OT-IIB/OPEVAL period.

Conclusions

The IFLOLS successfully passed all EMI and environmental tests and met or exceeded the critical parameters for reliability and maintainability listed in the ORD.

Table 9
OT-IIB/OPEVAL Quantitative Test Results

Critical Operational Issue	Parameter	Result	Threshold	Successes
Operational Availability	A_o	1.0	≥0.95	4,004.3 hr uptime, 0 hr downtime
Reliability	T_{SYS}	4,004.3 hr	≥347 hr	0 mission critical failures
Maintainability	F_{det}	Note (1)	≥0.80	No failures
Maintainability	F_I	Note (1)	≥0.90	No failures
Maintainability	F_{FAR}	Note (1)	≤0 10	No FAR

A_o – Operational Availability
T_{SYS} - System Mean Time Between Mission Critical Failure ($MTBMCF_{SYS}$)
F_{det} – Fault Detection
F_I – Fault Isolation
F_{FAR} – False Removal Rate
Note (1) – Unable to calculate

Source: Operational Evaluation of the Improved Fresnel Lens Optical Landing System (IFLOLS), Operational Test and Evaluation Force, Norfolk, VA. (1304-OT-IIB)

CHAPTER 5

DISCUSSION

IFLOLS IMPROVEMENTS OVER FLOLS

As was shown throughout the course of both the DT and OT evaluations, the IFLOLS met or exceeded all requirements of the ORD and TEMP. By using an advanced stabilization model based on the FLOLS system, the IFLOLS was able to provide improved stabilization in all sea states. Although Sea State 5 operations were not able to be conducted, the results indicate that the system would perform as designed to meet the objective of operating in 1.86 times Sea State 5

The maintainability and reliability evaluations showed that the system will be easier and less costly to maintain than the FLOLS. For example, the number of circuit boards has been reduced from over 200 in the FLOLS units to only 12 in the IFLOLS The IFLOLS also utilizes a fiber-optic link to it's power source which can be re-routed in the event of a failure. Improved BIT functions, alarms, and troubleshooting information will minimize system down-time by allowing maintainers to quickly and correctly detect, identify, and replace the malfunctioning component.

The improved sensitivity and increased range will aid pilots in making safer and more repeatable approaches to the carrier. During discussions with several test pilots and operational fleet pilots, the author heard nothing but outstanding comments about flying with the IFLOLS as compared to the current FLOLS system Glideslope deviations were recognized sooner, which allowed earlier and more accurate corrections and resulted in a more stabilized approach and fewer corrections in close.

Although the IFLOLS is a completely new system, it utilizes a proven concept as its basis for operation. The procedures for flying the IFLOLS are identical to those for the FLOLS, and the evaluations showed that a relatively small number of passes are required for pilots to adapt and feel comfortable when flying IFLOLS for the first time. Although the algorithms are improved, the basis for IFLOLS stabilization is the same as is used for FLOLS. IFLOLS LSO controls are similar and require minimal adaptation when transitioning from the FLOLS.

COMMERCIAL VLA'S

During initial analysis of replacement VLA's for the FLOLS, consideration was given to adapting and incorporating some type of commercial VLA for shipboard use. Although seemingly an inexpensive method of replacing the FLOLS, several issues unique to an aircraft carrier tend to require costly design changes which rule out most commercial designs.

The most common glideslope VLA's in use at airports are a form of Visual Approach Slope Indicator (VASI) shown in figure 36, or Precision Approach Path Indicator (PAPI), shown in figure 37. Both systems are based on color differentiation, with VASI utilizing a vertical (parallel to the runway) configuration, and PAPI using a horizontal (perpendicular to the runway) configuration. The biggest limitation with both of these systems is that they are designed for airfields with relatively long runways (as compared to the carrier) where aircraft flare to land and very precise touchdown points are not required The systems are not very sensitive to small glideslope deviations, and it is questionable whether they could be made sensitive enough utilizing only color change to be effective.

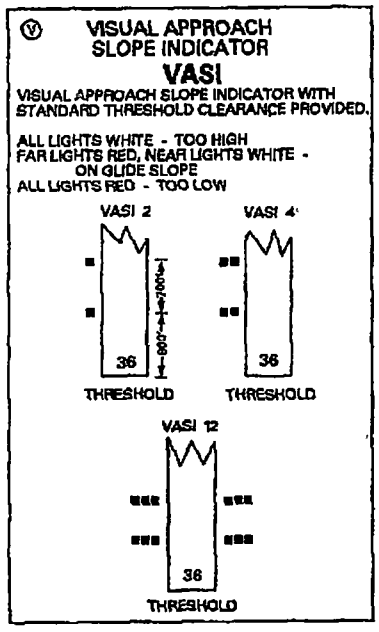

Figure 36
VISUAL APPROACH SLOPE INDICATOR (VASI)

Source: Department of Defense Flight Information Handbook, National Imagery and Mapping Agency, St Louis, MO, 07 Oct 1999.

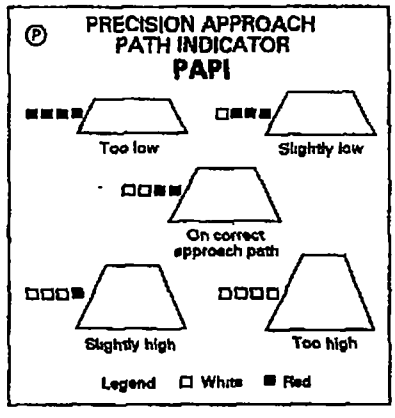

Figure 37
PRECISION APPROACH PATH INDICATOR (PAPI)

Source: Department of Defense Flight Information Handbook, National Imagery and Mapping Agency, St Louis, MO, 07 Oct 1999.

Because the runways are always stationary, there is no need for a stabilization system in any of the field-based VLA's. The systems also have no way to compensate for varying H/E values, which would be required if the system would be placed in the same spot as the FLOLS. Modifications to add these features, as well as make them compatible with the ship-board environment, tend to negate any cost-savings that the systems might provide.

The VASI and PAPI systems are fairly large and would require extensive modifications to even mount on the carrier. The large size also would probably require the entire port side of the ship, aft of the VLA, to remain clear of aircraft and equipment, so that pilots would have an unobstructed view throughout the approach. The loss of such a large area of the flight deck would be unacceptable.

Mounting a system flush with the flight deck, inside the landing area, would eliminate any line of sight obstructions from objects on the flight deck. With aircraft flying constant AOA approaches all the way to touchdown, however, the VLA would be lost from sight under the nose of the aircraft during the final portion of the approach. This would not be conducive to a very precise landing. Any flush mounted system in the landing area would also need to be engineered to withstand 54,000 lb of aircraft landing on top of it at up to 1000 fpm, which would again prove very costly.

COUPLED APPROACHES

With automation present in seemingly every part of society, especially aviation, one wonders when the carrier aviator will simply monitor a fully automatic approach to the carrier and not require a VLA? The two-part answer is A) it already happens, and B) it will be quite some time before it happens all the time.

The AN/SPN-46 system has been certified since the mid-1970's to provide fully automatic approaches, termed Mode I. Unfortunately, not all carrier aircraft are certified to fly a coupled approach, and even some of the ones that can are not very reliable. The F/A-18 series has proven to be a reliable Mode I aircraft provided the autopilot, aircraft beacon, and auto-throttles are operating correctly. F/A-18 pilots routinely fly Mode I's at night when the deck is steady. Other aircraft, such as the EA-6B and older versions of the F-14, are not certified to even attempt a Mode I due to antenna placement or poor autopilot/auto-throttle integration or performance.

Unfortunately, even the F/A-18's autopilot/autothrottle system and the ship's radar equipment are not reliable enough to perform routine coupled approaches to touchdown without a VLA backup. Additionally, neither system has the capability to operate safely during periods of large ship motion (high Sea States). Until older aircraft are retired, and new aircraft and upgraded radars are introduced with improved capability and reliability, the need for VLA's aboard the carrier will remain.

CHAPTER 6

CONCLUSIONS

As history has proven, and recent events have re-emphasized, the aircraft carrier and it's airwing have been, and will continue to be, an important component of our nation's military deterrence and peacekeeping strategy. In order to keep the carrier a viable force, it's airwing must be able to safely and accurately recover fixed-wing aircraft under all weather conditions. Until the days of unmanned aircraft and extremely accurate, safe, and reliable automatic approaches, the pilot will be solely responsible for recovering his aircraft aboard the carrier.

The current FLOLS in use on U.S. aircraft carriers has become increasingly difficult to operate and maintain in terms of cost, parts, and performance. Although the system has performed well for over 40 years, the time has come for a replacement which will provide improved performance and maintainability and will also require minimal pilot and LSO adaptation during the transition. The IFLOLS has demonstrated that it is very capable of meeting these requirements.

The IFLOLS uses the same theory of operation as the FLOLS and also uses the FLOLS stabilization algorithms as a basis for its improved stabilization program. The improved sensitivity and visual range will provide pilots with better glideslope information earlier in the approach. This will facilitate more timely corrections of the proper magnitude which, in turn, will improve safety and landing performance at the ship. The IFLOLS superior BIT capabilities will reduce system down time by allowing quicker detection, identification, and removal and replacement of faulty components. The system has shown it can withstand the rigors of the carrier flight deck and the

environmental extremes it is operated in. Both pilots and LSO's have adapted to the IFLOLS very well and have shown confidence in the system's ability to provide precise glideslope information during carrier approaches.

The days of an entire fleet of unmanned aircraft are still a long ways off. The United States Navy will continue to respond to crisis areas around the globe, and carrier pilots will continue to launch and recover from the flight decks both day and night, in all sorts of weather conditions. These pilots can rest assured that the IFLOLS will be ready to provide them with a highly reliable and accurate display of glideslope information well into the 21st century.

BIBLIOGRAPHY

BIBLIOGRAPHY

"Aerographer's Mate Third Class Training Manual," Naval Education and Training Command, May 1993, (NAVEDTRA 12850).

"Aircraft Recovery Bulletin No. 10-10D For All Arresting Gear and Optical Landing Systems," Patuxent River, MD, Naval Air Systems Command Headquarters, 18 Nov 1997, (NAVAIRWARCENACDIVLKE-4.8.10.4B).

"Aircraft Recovery Bulletin No. 62-12D, Mark 6 Mod 3 Fresnel Lens Optical Landing System (FLOLS)," Department of the Navy, Naval Air Systems Command, 11 Dec 1995, (NAVAIRWARCENACDIVLKE-4.8.10.4B).

"Carrier Suitability Testing Manual," Patuxent River, MD, Naval Strike Aircraft Test Squadron, 30 Sep 1994, (SA FTM-01).

"CV NATOPS Manual," Washington, D.C., Chief of Naval Operations, 01 Oct 1997, (NAVAIR 00-80T-105).

"Department of Defense Flight Information Handbook," National Imagery and Mapping Agency, St Louis, MO, 07 Oct 1999.

"Design Concept Trade-Off Study for the Improved Fresnel Lens Optical Landing System," Naval Air Warfare Center, Aircraft Division, Lakehurst, NJ, 26 Aug 1993, (NAWCADLKE-MISC-05-SR-0085).

Durand, George H., LT, USN (Ret), *Silent Communications of the Old Carrier*, The Hook Magazine, Winter 1992.

"Evaluation of the Improved Fresnel Lens Optical Landing System ," Naval Air Warfare Center, Patuxent River, Maryland, 01 May 1997, (NAWCADADPAX—97-90-RTR).

"Improved Fresnel Lens Optical Landing System (IFLOLS) Developmental Test & Evaluation Shorebased Tests, DT-IIA, Test Plan Number 1978," Naval Air Warfare Center, Aircraft Division, Patuxent River, MD, 10 Sep 1996.

"Improved Fresnel Lens Optical Landing System (IFLOLS) Developmental Test & Evaluation Shipboard Tests, DT-IIB, Test Plan Number 2044," Naval Air Warfare Center, Aircraft Division, Patuxent River, MD, 24 Feb 1997.

"Landing Signal Officer Reference Manual," United States Navy Landing Signal Officer School, Virginia Beach, VA, Sep 1991.

"Maintainability Demonstration Test Report for the Improved Fresnel Lens Optical Landing System (IFLOLS)," Naval Air Warfare Center, Aircraft Division, Lakehurst, NJ, 15 Aug 1997.

"NATOPS Flight Manual Navy Model EA-6B Aircraft," Chief of Naval Operations, Washington, D.C., 15 Jul 1997, (NAVAIR 01-85ADC-1).

"NATOPS Landing Signal Officer Manual," Chief of Naval Operations, Washington, D.C., 01 Nov 1997, (NAVAIR 00-80T-104).

Nielson, Wesley S., *Aircraft Carrier Visual Landing Aids*, University of Tennessee, Knoxville, July 1994.

"Operational Evaluation of the Improved Fresnel Lens Optical Landing System (IFLOLS)," Operational Test and Evaluation force, Norfolk, Virginia, 24 Jun 1998, (1304-OT-IIB).

"Operational Requirements Document (ORD) for Improved Fresnel Lens Optical Landing System, Number 374-88-94," 21 Sep 94.

"Organizational Maintenance/Theory of Operation: Improved Fresnel Lens Optical Landing System (IFLOLS)," NAVAIR 51-40ABA-21, 01 October 1997.

"Reliability Demonstration Test Report for the Improved Fresnel Lens Optical Landing System," Naval Air Warfare Center, Aircraft Division, Lakehurst, NJ, 15 Aug 1997.

"Test and Evaluation Master Plan (TEMP) No. 1304 for Improved Fresnel Lens Optical Landing System," 19 Dec 1994.

"Visual Landing Aids, Design Standards, Shipboard Installation," Chief of Naval Operations, Washington, D.C., 01 Jun 1974, (NAVAIR 51-50 AAA-1).

APPENDIX (TABLES)

Table 1
Sea State Definitions

WIND AND SEA SCALE FOR FULLY ARISEN SEA															
Sea-General		WIND				SEA									
Sea State	Description	Beaufort Wind Force	Description	Range (knots)	Wind Velocity (knots)	Wave Height (feet)			Significant Range of Periods (sec)	Period of Maximum Energy of Spectrum	Average Period	Average Wave Length	Minimum Fetch (nautical miles)	Minimum Duration (hours)
						Average	Significant	Average 1/10 Highest						
0	Sea like a mirror	U	Calm	Less than	0	0	0	0	-	-	-	-	-	-
	Ripples with the appearance of scales are formed, but without foam crests	1	Light airs	1 – 3	2	0 05	0 08	0 10	Up to 1 2 sec	0 7	0 5	10 m	5	18 min
1	Small wavelets, still short but more promounced, crests have a glassy appearance, but do not break	2	Light breeze	4 – 6	6	0 18	0 29	0 37	0 4-2 8	2 0	1 4	6 7 ft	8	39 min
	Large wavelets, crest begin to break, foam of a glassy appearance Perhaps scattered white horses	3	Gentle breeze	7 – 10	8 5	0 6	1 0	1 2	0 8-5 0	3 4	2 4	20	9 8	1 7 hrs
					10	0 88	1 4	1 8	1 0-6 0	4	2 9	27	10	2 4 hrs
2	Small waves becoming larger, fairly frequent white horses	4	Moderate breeze	11 - 16	12	1 4	2 2	2 8	1 0-7 0	4 8	3 4	40	18	3 8
					13 5	1 5	2 9	3 7	1 4-7 6	5 4	3 9	52	24	4 8
3					14	2 0	3 3	4 2	1 5-7 8	5.6	4 0	59	28	5 2
					16	2 9	4 6	5 8	2 0-8 8	6 5	4 8	71	40	5 6
4	Moderate waves, taking a more pronounced long form, many white horses are formed (chance of some spray)	5	Fresh breeze	17-21	18	3 8	6 1	7 8	2.5-10 0	7 2	5 1	90	55	8 3
					19	4 3	6 9	8 7	2 8-10 6	7 7	5 4	99	65	9 2
5					20	5 0	8 0	10	3 0-11 1	8 1	5 7	111	75	10

Table 1 (Continued)

WIND AND SEA SCALE FOR FULLY ARISEN SEA															
Sea-General		WIND				SEA									
Sea State	Description	Beaufort Wind Force	Description	Range (knots)	Wind Velocity (knots)	Wave Height (feet)			Significant Range of Periods (sec)	Period of Maximum Energy of Spectrum	Average Period	Average Wave Length	Minimum Fetch (nautical miles)	Minimum Duration (hours)
6	Large waves begin to form, the white foam crests are more extensive everywhere (probably some spray)	6	Strong breeze	22 - 27	22	6 4	10	13	3 4-12 2	8 9	6 3	134	100	12
					24	7 9	12	16	3 7-13 5	9 7	6 5	160	130	14
					24 5	8 2	13	17	3 8-13 6	9 9	7 0	164	140	15
					26	9 5	15	20	4 0-14 5	10 5	7 4	166	180	17
7	Sea heeps up and white foam from breaking waves begins to be blown in streaks along the direction of the wind (spindrift begins to be seen)	7	Moderate gale	28 - 33	28	11	18	23	4 5-15 5	11 3	7 9	212	230	20
					30	14	22	28	4 7-16 7	12 1	8 6	250	280	23
					30 5	14	23	29	48 -17 0	12 4	6 7	256	290	24
					32	16	26	33	5 0-17 5	12 9	9 1	285	340	27
	Moderately high waves of greater length, edges of crests break into spindrift The foam is blown in well marked streaks along the direction of the wind Spray affects visibility	8	Fresh gale	34 - 40	34	19	30	36	5 5-18 6	13 6	9 7	322	420	30
					36	21	35	44	5 8-19 7	14 5	10 3	363	500	34
					37	23	37	46 7	8 0-20 5	14 9	10 5	376	530	37
					38	25	40	50	6 2-20 8	15 4	10 7	392	600	38
					40	28	45	58	6 5-21 7	16 1	11 4	444	710	42
8	High waves Dense streaks of foam along the direction of the wind Sea begins to roll Visibility affected	9	Strong gale	41 - 47	42	31	60	64	7 0-23 0	17 0	12 0	492	830	47

Table 1 (Continued)

WIND AND SEA SCALE FOR FULLY ARISEN SEA															
Sea-General		WIND				SEA									
Sea State	Description	Beaufort Wind Force	Description	Range (knots)	Wind Velocity (knots)	Wave Height (feet)			Significant Range of Periods (sec)	Period of Maximum Energy of Spectrum	Average Period	Average Wave Length	Minimum Fetch (nautical miles)	Minimum Duration (hours)	
9	Very high waves with long overganging crests The resulting foam is in great patches and is blown in dense white streaks along the direction of the wind On the whole the surface of the sea takes a white appearance The rolling of the sea becomes heavy and shock-like Visibility is affected	10	Whole gale	48 - 56	48	44	71	90	7 5-26 0	19 4	13 5	660	1250	63	
					50	49	78	99	7 5-27 0	20 2	14 3	700	1420	89	
					51 5	52	83	106	8 0-28 2	20 8	14 7	738	1660	73	
					52	54	87	110	8 0-28 5	21 0	14 8	750	1810	75	
					54	59	96	121	8 0-29 5	21 8	15 4	810	1800	81	
	Exceptionally high waves (small and medium-sized ships might for a long time be lost to view behind the waves) The sea is completely covered with long white patches of foam lying along the direction the wind Everywhere the edges of the wave crests are blown into froth. Visibility affected	11	Storm	58 – 63	58	64	103	130	8 5-31 0	22 6	16 3	910	2100	88	
					59 5	73	110	148	10 0-32 0	24 0	17.0	985	2500	101	
	Air filled with foam and spray Sea completely white with driving spray, visibility very seriously affected	12	Hurricane	64 – 71	>64	>80	>128	>164	101(35)	(28)	(18)	-	-	-	

Source: Aerographer's Mate Third Class Training Manual, Naval Education and Training Command, May 1993 (NAVEDTRA 12850).

Table 2
Procedures Used in IFLOLS Mean Time To Repair (MTTR) Demonstration

Number	Criteria
1	Time standards of MIL-HDBK-472, Appendix A, were used to determine the time taken for the removal and replacement of certain components that were not actually removed.
2	Time taken to disassemble/assemble the unit and subassemblies was timed at the first occurrence. The recorded time was used for subsequent occurrences.
3	Sufficient equipment to insert and repair fault were available.
4	Items with low failure rates or items that would cause a critical failure if they were to fail were randomly chosen for this test.
5	Fault insertion was only performed where successful recovery of the system was guaranteed.
6	When fault insertion was not performed, the design engineers informed the technicians of the type of error code that he or she would see should the fault actually occur.
7	Personnel performing the maintenance actions were fleet personnel who will be maintaining the IFLOLS system.
8	All maintenance personnel were fully trained and familiar with the safe operation of the equipment.
9	All tools and equipment required for fault isolation, removal, repair, replacement, and retest were readily available.
10	The latest version of the IFLOLS technical manual as well as schematics were available.
11	Corrective maintenance tasks were accomplished in accordance with the applicable documents. Preventive or scheduled maintenance was not included.
12	The electrical design engineers inserted and simulated faults in the system.
13	The Reliability and Maintainability members were responsible for timing the maintenance actions and recording data.
14	The technical manual was verified for accuracy and completeness of repair procedures.

Source: Maintainability Demonstration Test Report for the Improved Fresnel Lens Optical Landing System, Naval Air Warfare Center Aircraft Division Lakehurst, 15 Aug 1997.

VITA

Joel David Jungemann was born in Oak Park, Illinois, on September 4th, 1966. His family moved to Austin, Texas, in 1981 and Joel graduated from Lyndon B. Johnson High School in 1984. He graduated from Valparaiso University in Valparaiso, Indiana, with a Bachelor's Degree in Mechanical Engineering in the Spring of 1988.

Joel joined the United States Navy in October of 1988 and was commissioned an Ensign in March of 1989. After earning his wings in November of 1990, he was assigned to Naval Air Station Whidbey Island, Washington, to fly the Grumman EA-6B Prowler. His first assignment was to VAQ-140 where he completed two work-up cycles and one six-month deployment onboard the USS George Washington (CVN-73). During this tour, Joel earned his Airwing qualification as a Landing Signal Officer (LSO). In 1994, he received orders to help stand up VAQ-134, the Navy's first Expeditionary EA-6B squadron. He completed a six-month deployment to Marine Corps Air Station Iwakuni, Japan, and served as the senior LSO for the squadron. In January of 1996, Joel joined VAQ-129, the EA-6B Fleet Replacement Squadron, where he served as an instructor pilot and earned his Training Qualification as an LSO. During this tour, he was selected to attend the United States Naval Test Pilot School in Patuxent River, Maryland. Following graduation in December of 1998, he joined the Naval Strike Aircraft Test Squadron flying both the EA-6B and F/A-18. He is currently serving as the Carrier Suitability Department Head and also the X-31 VECTOR project pilot.

Joel has logged over 2300 total flight hours, with more than 1600 in the EA-6B, and has flown 30 different types of aircraft. He has flown from the flight decks of 8 different aircraft carriers and has accumulated over 350 arrested landings.