To the Graduate Council:

I am submitting herewith a thesis written by James John Rooney entitled "An Automated Procedure for Qualitative Common Cause Failure Analysis of Complex Systems." I recommend that it be accepted in partial fulfillment of the requirements for the degree of Master of Engineering, with a major in Nuclear Engineering.

J. B. Fussell, Major Professor

We have read this thesis
and recommend its acceptance:

P. F. Pasqua

W. L. Dodds, Jr.

C. M. Katz

Paul N. Stevens

Accepted for the Council:

L. Evans Roth

Vice Chancellor
Graduate Studies and Research

Thesis
TB
.R665
cop. 2

AN AUTOMATED PROCEDURE FOR QUALITATIVE COMMON CAUSE FAILURE ANALYSIS OF COMPLEX SYSTEMS

A Thesis

Presented for the

Master of Engineering

Degree

The University of Tennessee, Knoxville

James John Rooney

August 1978

1363987

ACKNOWLEDGEMENTS

The author wishes to express his sincere appreciation to his advisor Dr. J. B. Fussell whose support and advice were vital to the completion of this thesis.

The author also wishes to thank Dr. P. F. Pasqua for supporting this thesis through teaching and research assistantships. Dr. G. R. Burdick, Dr. D. M. Rasmuson, and Mr. J. R. Wilson of the Idaho National Engineering Laboratory are gratefully acknowledged for their many helpful suggestions and comments. Special thanks are given to the staffs of the Associated Western Universities and the Idaho National Engineering Laboratory for making possible the author's appointment to the laboratory during the summer of 1977.

Sincere thanks is given to Mr. D. J. Campbell for his contribution to the logic models presented in Appendix II. Mr. D. P. Wagner is gratefully acknowledged for his guidance in the course of this research. Mr. W. H. Hamilton and Mr. R. E. Hottel of Westinghouse Electric Corporation are thanked for their contributions during our many discussions.

Special appreciation is reserved for Miss L. S. Baker and Mr. W. M. Simpkins for their assistance in the final stages of this task. The author would like to thank Dr. H. L. Dodds, Dr. E. M. Katz, and Dr. P. N. Stevens for their support in the completion of this thesis.

The work reported herein was performed under a contract between the Nuclear Engineering Department, The University of Tennessee, and Westinghouse Electric Corporation.

ABSTRACT

This thesis is the result of a common cause failure analysis of the Clinch River Breeder Reactor Plant (CRBRP) Shutdown Heat Removal System (SHRS). Under the assumptions made, the analysis shows that the Direct Heat Removal System (DHRS) is coupled to the Primary Heat Transport System (PHTS) during all phases of operation.

The common cause failure analysis was performed with a new automated procedure, developed as a part of this research. The results of the CRBRP SHRS common cause failure analysis indicate that the new automated procedure is a workable methodology for assessing potential common cause failures.

TABLE OF CONTENTS

CHAPTER		PAGE
1.	INTRODUCTION	1
	1.1 Background	1
	1.2 Objectives	3
	1.3 Related Literature	4
	1.4 Organization of Text	5
2.	AN AUTOMATED PROCEDURE FOR QUALITATIVE COMMON CAUSE FAILURE ANALYSIS OF COMPLEX SYSTEMS	6
	2.1 Concepts of the Procedure	6
	2.2 Implementation of the Procedure	7
3.	ANALYSIS OF THE CLINCH RIVER BREEDER REACTOR PLANT SHUTDOWN HEAT REMOVAL SYSTEM	9
	3.1 System Description	9
	3.2 Problem Selection	14
	3.3 Modeling Approach	15
	3.4 Input to the Common Cause Failure Analysis	15
	3.5 Analysis Procedure	16
	3.6 Results	20
4.	CONCLUSIONS AND RECOMMENDATIONS	25
	4.1 Conclusions Concerning the CRBRP SHRS Common Cause Failure Analysis	25
	4.2 Conclusions Regarding the Automated Procedure for Common Cause Failure Analysis of Complex Systems	26
	4.3 Recommendations Concerning the CRBRP SHRS Common Cause Failure Analysis	26
	4.4 Recommendations Concerning the Automated Procedure for Common Cause Failure Analysis of Complex Systems	27
LIST OF REFERENCES		28
APPENDICES		31
I.	USER'S MANUAL FOR BACFIRE II	32
II.	CRBRP SHUTDOWN HEAT REMOVAL SYSTEM LOGIC MODELS	91
III.	INPUT DATA FOR THE CRBRP SHUTDOWN HEAT REMOVAL SYSTEM COMMON CAUSE FAILURE ANALYSIS	164
VITA		174

LIST OF TABLES

TABLE		PAGE
3-1.	Manufacturers used in CRBRP SHRS Common Cause Failure Analysis	17
3-2.	Generic Cause Susceptibilities used in CRBRP SHRS Common Cause Failure Analysis	18
3-3.	Summary of Results for the CRBRP SHRS Common Cause Failure Analysis for Phase One	22
3-4.	Summary of Results for the CRBRP SHRS Common Cause Failure Analysis for Phases Two and Three	24
I-1.	Examples of Special Conditions for the First Criterion	41
I-2.	Examples of Susceptibilities for the Second Criterion	43
I-3.	Description of Input for Title Cards	49
I-4.	Description of Input for Data Set One	51
I-5.	Description of Input for Data Set Two	54
I-6.	Description of Input for Data Set Three	56
I-7.	Description of Input for Data Set Four	58
I-8.	Description of Input for Data Set Five	60
I-9.	Description of Input for Data Set Six	62
I-A-1.	BWR System Identification Code	66
I-A-2.	PWR System Identification Code	68
I-A-3.	Component Code	69
I-A-4.	Failure Mode Code	72
I-B-1.	Minimal Cut Sets for Dummy Event DUMC	76
I-B-2.	Minimal Cut Sets for Dummy Event DUMJ	76
I-B-3.	Minimal Cut Sets for Dummy Event DUML	77

TABLE PAGE

I-B-4. Minimal Cut Sets for TOP EVENT A 77

I-B-5. Common Cause Failure Data for the Sample Problem 78

I-B-6. Manufacturers for Sample Problem 79

I-B-7. Generic Cause Susceptibility for the Sample Problem 81

II-1. System Identification Codes 93

II-2. Component Description Codes 94

II-3. Failure Mode Codes 96

II-4. Abbreviations Used in Event Description 97

LIST OF FIGURES

FIGURE		PAGE
3-1.	CRBRP Main Heat Transport System	10
3-2.	CRBRP Direct Heat Removal System	11
3-3.	Common Cause Failure Analysis Steps	19
I-1.	BACFIRE II Flow Chart	46
I-B-1.	Sample Problem Fault Tree	74
I-B-2.	Sample Problem Fault Tree with Dummy Events	75
I-B-3.	Sample Problem Floor Plan	80
I-B-4.	Sample Problem Susceptibility Maps	80
I-C-1.	Sample Problem Input	83
I-D-1.	Sample Problem Output	87
II-1.	Identification Code Format	92
II-2.	CRBRP SHRS Phase One Logic Model	98
II-3.	CRBRP SHRS Phase Two Logic Model	120
II-4.	CRBRP SHRS Phase Three Logic Model	142
III-1.	CRBRP SHRS Common Cause Failure Analysis Data	165

CHAPTER 1

INTRODUCTION

1.1 BACKGROUND

System reliability analysis is that portion of reliability engineering which deals with synthesizing reliability characteristics, either qualitative or quantitative, for a system from the reliability characteristics of the system components. A system reliability analysis provides an objective basis for analyzing system design, performing trade-off studies, demonstrating compliance with safety standards, and justifying system changes or additions.

A system reliability analysis can consist of nine steps. These are:

1. System definition
2. System logic model construction
3. Qualitative analysis
4. Common cause failure analysis
5. Update the qualitative analysis to reflect the common cause failure analysis results
6. Quantitative analysis
7. Uncertainty analysis
8. Formulation of results and conclusions
9. Final documentation.

A safety and reliability analysis often requires a common cause failure analysis. A common cause failure[1], sometimes called a common mode failure, is any event or occurrence which results in multiple component failures. A 1975 General Electric Company

report[2] examined the type of system which requires a common cause failure analysis:

> With the development of highly reliable components and techniques for their redundant and/or other reliable combination, a well designed system for a high-reliability application will typically have a small probability of random failure. Under these circumstances, the possibility of common mode failure is the dominant consideration relative to total system reliability.

Williams[3], in a review of common cause failures in U.S. commercial power reactors, states:

> It was found from the data study that common mode failures do occur to a significant extent and that they are therefore a definite factor in reactor system design and operation.

Wagner[4] reported on the present state of automated procedures for common cause failure analysis:

> Methods for an organized approach to common cause failure analysis have been presented. However, the complexity of the current reactor safety systems has made this type of analysis overwhelmingly tedious without computer aid. Even the computer aided approaches are often prohibitive for complex systems.

A need exists for a structured common cause failure analysis methodology which is capable of being automated and of handling complex systems.

The Clinch River Breeder Reactor Plant[5] is the United States' first large scale demonstration breeder reactor power plant. Since this plant is a first-of-a-kind plant, there is concern over the ability to maintain a new design in a safe condition throughout operation, and particularly during shutdown periods. It is essential that the decay heat generated in the core be removed during shutdown periods, in order to prevent a possible meltdown of reactor fuel.

The purpose of the Shutdown Heat Removal System is to cool the reactor by transferring decay heat from the reactor core to one of the system's ultimate heat sinks. Due to the multiple redundancy present in the system's design, the probability of system failure due to independent hardware failures is vanishingly small. A common cause failure might be postulated in which a single event could disable the entire Shutdown Heat Removal System. Common cause failures will probably dominate contributions to system failure. Identification of possible common cause failures is essential so that reliable decay heat removal can be provided to the reactor core.

1.2 OBJECTIVES

A major objective of this thesis is to perform a common cause failure analysis of the Clinch River Breeder Reactor Plant (CRBRP) Shutdown Heat Removal System (SHRS), the analysis of which was heretofore unmanageable. The SHRS is designed "to adequately remove sensible and decay heat from the reactor following normal shutdown, operational occurrences, and postulated accidents on both a short term and long term basis."[6] Failure of the SHRS can result in damage to the reactor core. Since the SHRS is still in the design process, potential common cause failures that are identified in the present design can be considered before the final design is complete.

An additional objective of this thesis is to implement the procedure for qualitative common cause failure analysis proposed by Wagner.[4,7] This procedure is generally applicable to complex systems. Readers of this thesis should be familiar with the material presented in references 4 and 7.

1.3 RELATED LITERATURE

Automated procedures for common cause failure analysis are not new. A structured approach to common cause failure analysis was developed at the Idaho National Engineering Laboratory (INEL).[1] Potential common causes were classified into categories. Fault tree methods were suggested for determining the system modes of failure, called minimal cut sets[8], and a computer is then used to search the minimal cut sets for potential common causes of failure.

The COMCAN[9] program, developed at INEL, and the BACFIRE[10] program, developed at The University of Tennessee, were the first implementations of this methodology. Since the purpose of a common cause failure analysis is to uncover dependencies among component failures, a complete list of hardware minimal cut sets, that is, minimal cut sets which reflect only system component failures, is required as input to these codes. Unfortunately for complex systems, determining the complete list of hardware minimal cut sets is a difficult and often impossible job.

Portions of this methodology have recently been incorporated into the SETS[11] program. This program analyzes fault trees in sections and can handle large fault trees. A variable transformation is initially performed to incorporate the common cause failure data into the fault tree. This variable transformation is tedious for large fault trees. A limitation of this code is that the analyst must determine the various location parameters. This task is performed automatically by BACFIRE[10] and COMCAN[9].

Wagner[4,7] proposed a synthesis procedure which removes the requirement that the complete list of hardware minimal cut sets be determined. Wagner's results are, however, the same as if all the hardware minimal cut sets were used. The removal of the requirement of having all the hardware minimal cut sets permits the common cause failure analysis of highly complex systems. The coupling of the synthesis procedure to the INEL approach for common cause failure analysis by means of a computer program is a subject of this thesis.

The objective of the Clinch River Breeder Reactor Plant Project is to design and construct a 350 megawatt (electric) liquid metal fast breeder reactor demonstration plant. A complete description of the Shutdown Heat Removal System is given in the Preliminary Safety Analysis Report (PSAR).[5]

1.4 ORGANIZATION OF THE TEXT

Chapter 2 describes the methodology for the common cause failure analysis of complex systems as required for the analysis of the Clinch River Breeder Reactor Plant Shutdown Heat Removal System. Chapter 3 describes the analysis carried out for the Clinch River Breeder Reactor Shutdown Heat Removal System. Chapter 4 discusses the conclusions of the work and the advantages and limitations of the methodology.

Appendix I contains the BACFIRE II user's manual. Appendices II, and III contain the logic models, and the input data for the analysis of the Clinch River Breeder Reactor Shutdown Heat Removal System.

CHAPTER 2

AN AUTOMATED PROCEDURE FOR QUALITATIVE COMMON CAUSE FAILURE ANALYSIS OF COMPLEX SYSTEMS

2.1 CONCEPTS OF THE PROCEDURE

The most difficult problem in the common cause failure analysis of complex systems is handling the huge mass of information necessary to the analysis. Computer aided common cause failure analysis becomes a difficult problem due to the large number of hardware minimal cut sets found in a complex system fault tree.

D. P. Wagner[4,7] proposed a synthesis procedure which enables the analyst to obtain the common cause candidates for the system failure of interest, called the TOP EVENT, without determining all the hardware minimal cut sets for the system failure of interest. The complex system fault tree is dissected into smaller fault trees for which all the hardware minimal cut sets can be determined. The hardware minimal cut sets found for the branches are termed intermediate minimal cut sets. A common cause failure analysis is performed on these cut sets, resulting in intermediate common cause candidates. Hardware minimal cut sets for the system failure of interest are obtained by replacing the dissected portion of the fault tree with dummy events. At the completion of the analysis, the dummy events are expanded using the intermediate common cause candidates and the common cause candidates for the system failure of interest are constructed.

There are two guidelines in deciding the dissection points in the

fault tree:

1. The number of hardware minimal cut sets in the dissected branch must be small enough to allow their determination with a minimum of computer resources.
2. The intermediate minimal cut sets should contain two or more basic events.

By definition, a common cause failure involves more than one component. When an intermediate common cause failure analysis is performed, it is possible to remove some of the two event or greater hardware minimal cut sets when they are not intermediate common cause candidates. However, all one event cut sets must be kept for inclusion in the upper level of the analysis.

2.2 IMPLEMENTATION OF THE PROCEDURE

A computer program has been developed as a part of this thesis work, which utilizes Wagner's[4,7] synthesis procedure. This program, BACFIRE II (see Appendix I), is an extension of the original BACFIRE[10] program for common cause failure analysis.

BACFIRE II allows the analyst the use of up to three dummy events. These dummy events can be manipulated in two ways. Dummy events can be either separate or nested. A dummy event is separate if the minimal cut sets representing that dummy event contain no other dummy events. A dummy event is nested if the minimal cut sets representing that dummy event contain both basic events and other dummy events.

BACFIRE II has an option which allows the analyst to construct a

permanent library of common cause failure analysis information. The analyst can choose which type of computer storage device is best for his use. This option allows the analyst to reference this master data set when using BACFIRE II.

CHAPTER 3

ANALYSIS OF THE CLINCH RIVER BREEDER REACTOR PLANT SHUTDOWN HEAT REMOVAL SYSTEM

3.1 SYSTEM DESCRIPTION

The Clinch River Breeder Reactor Plant[12] (CRBRP) Shutdown Heat Removal System[5,6,13] (SHRS) is analyzed using the automated procedure presented in this thesis. The SHRS is designed to remove heat generated by radioactive decay after shutdown from the CRBRP reactor core during all normal shutdown conditions and during all operational occurrences and postulated accidents.

The SHRS is composed of the Main Heat Transport System, shown in Figure 3-1, and the Direct Heat Removal System, shown in Figure 3-2. The purpose of the Main Heat Transport System is to remove heat from the reactor core. Three identical loops are provided for this purpose. The Main Heat Transport System is composed of the Primary Heat Transport System (PHTS) and the Intermediate Heat Transport System (IHTS). The PHTS transports heat from the reactor core to the Intermediate Heat Exchanger (IHX). Each of three PHTS loops contain a hot leg centrifugal sodium pump, an IHX, a permanent magnet flowmeter, and a cold leg check valve. The IHTS consists of three cooling loops operating in parallel to circulate sodium from the tube side of the IHX's through the steam generators and back to the IHX's. Each of the cooling loops consists of a cold leg pump, a sodium expansion tank, a permanent magnet flowmeter, and piping to transport the

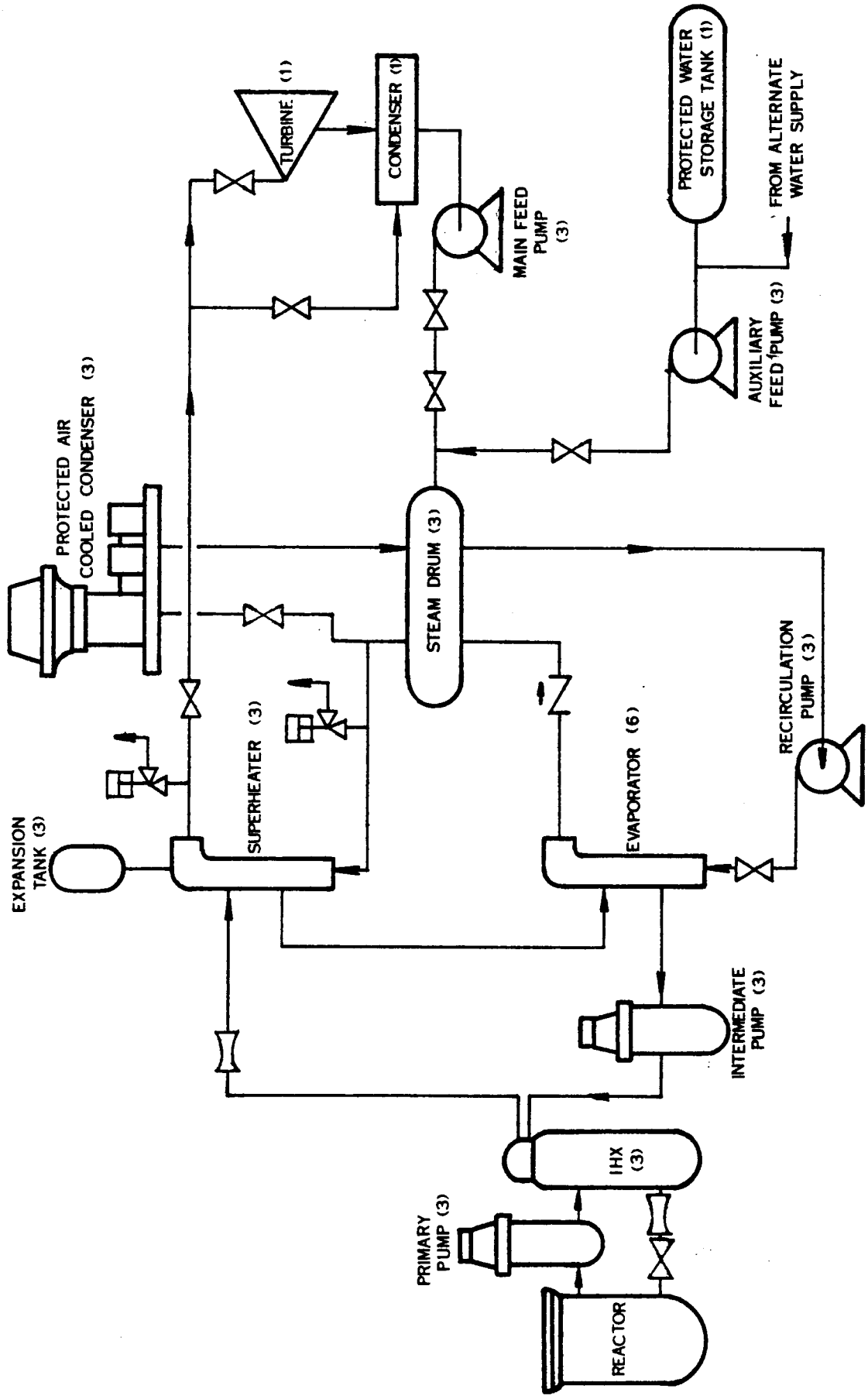

Figure 3-1. CRBRP Main Heat Transport System.

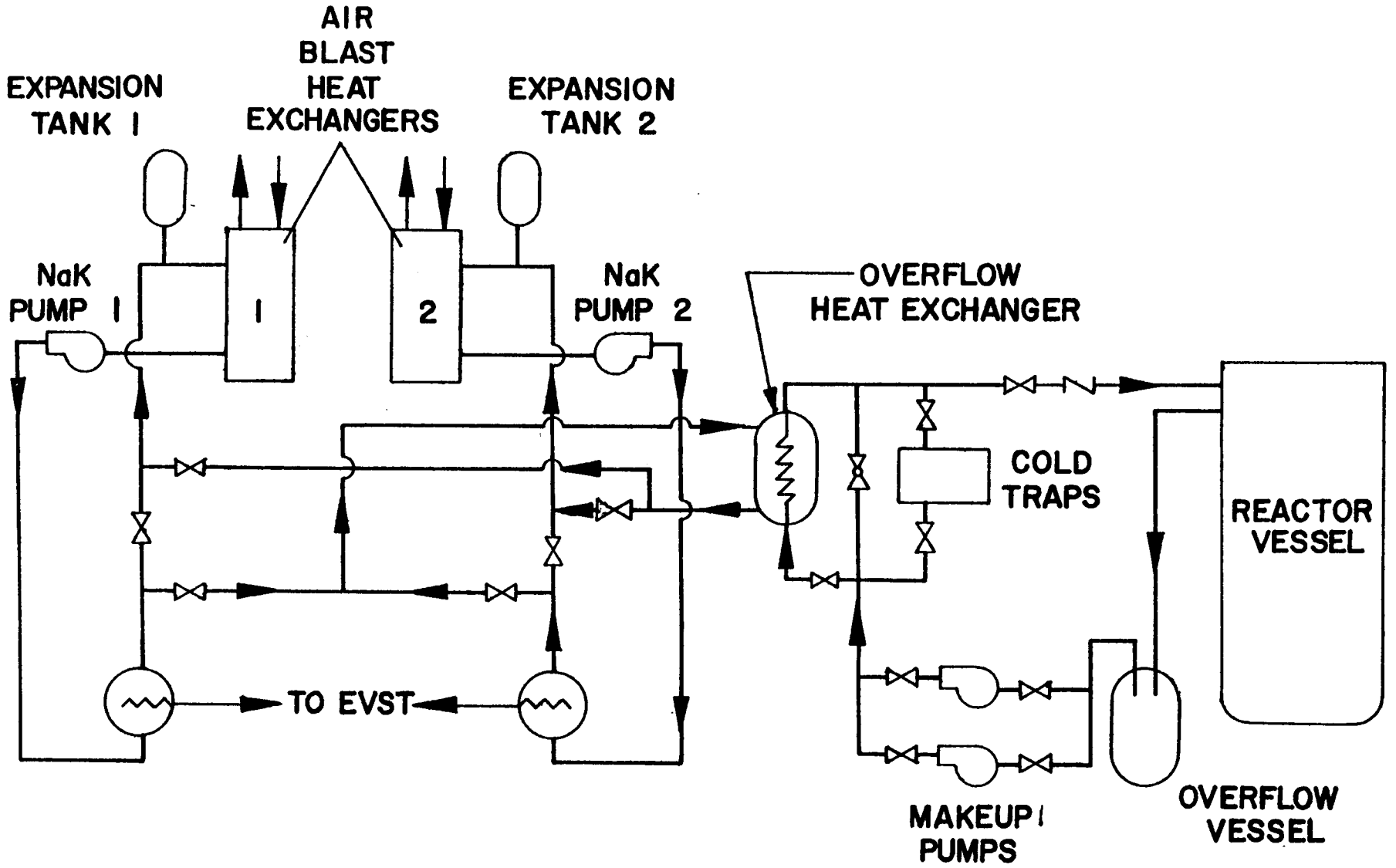

Figure 3-2. CRBRP Direct Heat Removal System.

sodium from the IHX outlet through a superheater and two evaporators back to the IHX inlet. The SGS extracts heat from the IHTS sodium and transports it to a heat sink. There are three SGS loops, one for each IHTS loop. Each SGS loop consists of a steam drum, a recirculation water pump, and three steam generator modules. These steam generator modules are the evaporators and superheaters shared with the IHTS. The heat sink is either the Main Condenser/Feedwater System, which is used during normal plant operation, or the Steam Generator Auxiliary Heat Removal System (SGAHRS) which is used during off normal plant operation. The steam produced by the SGS loops is fed to the Main Condenser through turbine bypass valving. Feedwater is returned from the condenser hot well by two condensate pumps and three main feed pumps to the three steam drums. This system is used whenever the Main Condenser and offsite power are available. The offsite power is needed to power the non-safety related condensate pumps and main feed pumps. SGAHRS is used whenever the Main Condenser/Feedwater System is unavailable. SGAHRS consists of the short term Auxiliary Feedwater System (AFWS) and the long term Protected Air Cooled Condenser System (PACC). The AFWS consists of a Protected Water Storage Tank (PWST), three pumps, and associated valves and piping. One pump is steam turbine driven. The steam is supplied by any one of the three steam drums. The other two pumps are driven by normal or emergency AC power. The objective of the pumps is to provide a supply of auxiliary feedwater from a protected source. On a short term basis, decay heat is removed via direct steam dump to the atmosphere through vent valves

at the steam drum or superheater outlets. The PWST is sized to provide sufficient water to allow venting until the PACC's become available, to allow for losses due to pipe rupture, and to provide makeup water for a thirty day period. The PACC's provide long term decay heat removal capability when SGAHRS is activated following shutdown. One PACC is connected to each steam drum. Steam rises from each steam drum by natural circulation to a PACC where it is condensed. The water is returned to the steam drum by gravity flow.

The Direct Heat Removal System (DHRS) is composed of two subsystems, the Sodium Overflow System and the Ex-Vessel Storage Tank (EVST) Cooling System. The Sodium Overflow System transports primary sodium from the reactor core to the Overflow Heat Exchanger (OHX). The Sodium Overflow System includes a Sodium Overflow Vessel, two electromagnetic sodium makeup pumps, the OHX, and a cold leg check valve. The OHX thermally couples the EVST Cooling System and the Sodium Overflow System. The EVST Cooling System transfers heat from the OHX to the Airblast Heat Exchangers (ABHX). The system consists of two identical cooling loops. These loops operate in parallel to transfer NaK from the shell side of the OHX through the ABHX's back to the OHX. Each loop contains an electromagnetic NaK pump, a NaK expansion tank, an EVST to NaK cooler, and an ABHX.

A diverse capability to transfer decay heat from the reactor core to the ultimate heat sinks via natural circulation of sodium has been incorporated in the CRBRP SHRS design.

3.2 PROBLEM SELECTION

The main SHRS failure of interest for this analysis is: Loss of capability to provide forced convection cooling to the reactor core during shutdown. The various heat transport paths available and the many capabilities of the heat removal systems during different time periods complicate the analysis and require the use of phased mission techniques for solution. A phased mission [14,15] is a task, to be performed by a system, during the execution of which the system is altered such that the failure logic of the system changes at specified times.

Shutdown from 3-loop, 100% power has three distinct phases of operation.

Phase One: Phase One is defined as the time period from 0 to 4 hours. During this time period either the full capacity DHRS or any SGS loop venting steam are capable of removing the full decay heat load.

Phase Two: Phase Two is defined as the time period from 4 hours to 120 hours. During this time period either a single PACC or half capacity DHRS are capable of removing the full decay heat load.

Phase Three: Phase Three is defined as the time period from 120 hours to the end of shutdown. During this time period either a half capacity PACC or half capacity DHRS are capable of assuming the decay heat load.

3.3 MODELING APPROACH

The logic models developed for the CRBRP SHRS, with an explanation of the symbols and abbreviations used, are contained in Appendix II. The logic models were constructed in the fault tree format. Assumptions made for the construction of the logic models are:

1. Offsite power is not available.
2. Onsite power is available.
3. The reactor is shutdown from 3-loop, 100% power operation.
4. No installation errors exist.
5. Shutdown has occured as the result of a reactor scram, i.e., inserting the control rods into the reactor core.
6. This shutdown normally trips the primary and intermediate pumps to pony motor operation.
7. Once tripped to pony motor operation, the primary and intermediate pumps will not be restarted until the end of shutdown.
8. Natural circulation of sodium is not considered in this analysis.
9. Natural circulation of feedwater through the steam generators is sufficient for decay heat removal.

3.4 INPUT TO THE COMMON CAUSE FAILURE ANALYSIS

The qualitative failure data necessary for the common cause failure analysis was obtained from personnel at the Westinghouse Advanced Reactor Division[16] (WARD), the CRBRP PSAR[5] and other

industry reports.[17,18,19,20] Sensitivity ranking of basic events (see Appendix I) was not used in order to provide a more comprehensive list of common cause candidates.

Only one special condition, manufacturer, was used in the analysis. Twelve manufacturers, shown in Table 3-1, were identified as producing components for the SHRS. Seven generic cause susceptibilities, shown in Table 3-2, were utilized in the analysis

Locations were assigned to the components of the SHRS based on information from the PSAR[11] and discussions with WARD personnel.

Natural barriers within the plant were used in defining domains of the generic failure cause susceptibilities. The domain definitions are felt to be conservative.

The input data for the common cause failure analysis is described in Appendix III. The data includes the generic cause susceptibilities, physical locations, and special conditions for each basic event in the analysis. The domains for each generic cause susceptibility are also defined in Appendix III.

3.5 ANALYSIS PROCEDURE

A complete list of hardware minimal cut sets cannot be found for the CRBRP SHRS logic models for any phase. Even with the use of the latest computer programs, the enormous number of hardware minimal cut sets given by this complex system logic model cannot be determined.

The analysis procedure used is described in Chapter 2 and Appendix II of this thesis. Figure 3-3 gives a brief outline of the steps in this analysis procedure. The MOCUS[21] computer program

TABLE 3-1

MANUFACTURERS USED IN CRBRP SHRS COMMON CAUSE FAILURE ANALYSIS

Manufacturers
Atomics International
Babcock and Wilcox Corporation
Bingham - Willamette Company
Byron Jackson Pump Division of Borg Warner Corporation
Chicago Bridge and Iron Company
Conseco Incorporated
Foster Wheeler Energy Corporation
Joseph Oat Corporation
Pacific Tube Company
Process Equipment Corporation
William Powell Company
Wyatt Industries

TABLE 3-2

GENERIC CAUSE SUSCEPTIBILITIES USED IN CRBRP SHRS

COMMON CAUSE FAILURE ANALYSIS

Generic Cause Susceptibilities
Chemical Reaction
Corrosion
Freezing Sodium
Impact
Pressure
Radiation Damage
Stress

OBTAIN INPUT INFORMATION

- **HARDWARE MINIMAL CUT SETS**
- **QUALITATIVE FAILURE CHARACTERISTICS OF THE BASIC EVENTS**
- **PHYSICAL LOCATIONS OF COMPONENTS**
- **BARRIERS TO FAILURE CAUSES**

CARRY OUT COMPUTER SEARCH FOR COMMON CAUSE CANDIDATES

DETERMINE COMMON CAUSE EVENTS FROM COMMON CAUSE CANDIDATES

IDENTIFY MECHANISM FOR COMMON CAUSE EVENTS

Figure 3-3. Common Cause Failure Analysis Steps.

provided the intermediate minimal cut sets for all segments of the dissected fault trees. Common cause candidates were obtained through the use of the BACFIRE II computer program.

3.6 RESULTS

This common cause failure analysis of the CRBRP SHRS resulted in 901 common cause candidates in Phase One and 2353 common cause candidates in both Phases Two and Three. The results for Phases Two and Three are identical because the differences between the logic models for these phases are minor. The common cause candidates for all three phases represent the dependencies between the PHTS and the DHRS.

In Phase One, 456 common cause candidates were identified on the basis of a common manufacturer. Atomics International was identified in 430 candidates. The components involved are the nine steam generator modules. Nineteen candidates involve both the primary loop check valves and the Intermediate Heat Exchangers, which are produced by the Foster Wheeler Energy Corporation. Another seven candidates, involving the primary and secondary sodium pumps, were identified as being produced by the Byron Jackson Pump Division of Borg Warner Corporation.

The dependencies between the PHTS and the DHRS in Phase One result from the requirement that all three primary heat transport loops must be available for sodium mixing when the DHRS is in use. The loss of any primary heat transport loop thereby renders the DHRS incapable of providing forced convection cooling to the reactor core.

Components located in the primary heat transport loops have two possible generic causes.

1. Corrosive agents, such as precipitating oxides, high oxygen concentration, or other interstitial impurities such as carbon or hydrogen could contaminate the primary sodium.
2. Radiation damage, due to prolonged contact with radioactive primary sodium or contact with fuel particles after an accident in the reactor core.

In Phases Two and Three, 431 common cause candidates were identified on the basis of common manufacturer. One common cause candidate represents the primary sodium pumps manufactured by Byron Jackson Pump Division of Borg Warner Corporation. The other 430 candidates are those identified in Phase One as being manufactured by Atomics International.

The dependencies between the PHTS and the DHRS in Phases Two and Three result from the requirement that one primary heat transport loop must be available for sodium mixing when the DHRS is in use. The loss of all three primary loops thereby renders the DHRS incapable of providing forced convection cooling to the reactor.

Components located in the primary heat transport loops and in the Sodium Overflow System were identified with two possible generic causes. These are the same generic causes identified in the Phase One. The effects of these two generic causes can be minimized by monitoring the composition of the primary sodium. The results for Phase One are summarized in Table 3-3 and the results for Phases Two and Three are

TABLE 3-3

SUMMARY OF RESULTS FOR THE CRBRP SHRS COMMON CAUSE FAILURE ANALYSIS FOR PHASE ONE

Components Involved	Possible Generic Failure Causes
Steam generator modules	1. Common manufacturer - Atomics International
Primary loop check valves and intermediate heat exchangers	1. Common manufacturer - Foster Wheeler Energy Corporation
Primary and secondary sodium pumps	1. Common manufacturer - Byron Jackson Pump Division of Borg Warner Corporation
Components located in primary heat transport loops	1. Corrosive agents 2. Radiation damage

summarized in Table 3-4. The complete list of common cause candidates is too large to be included as part of this thesis.

TABLE 3-4

SUMMARY OF RESULTS FOR THE CRBRP SHRS COMMON CAUSE FAILURE ANALYSIS FOR PHASES TWO AND THREE

Components Involved	Possible Generic Failure Causes
Steam generator modules	1. Common manufacturer - Atomics International
Primary sodium pumps	1. Common manufacturer - Byron Jackson Pump Division of Borg Warner Corporation
Components in primary heat transport loops and sodium overflow system	1. Corrosive agents 2. Radiation damage

CHAPTER 4

CONCLUSIONS AND RECOMMENDATIONS

4.1 CONCLUSIONS CONCERNING THE CRBRP SHRS COMMON CAUSE FAILURE ANALYSIS

This common cause failure analysis of the Clinch River Breeder Reactor Shutdown Heat Removal System shows that the Direct Heat Removal System is coupled to the Primary Heat Transport System during all phases of operation. This is due to the requirement that at various times one or more of the primary heat transport loops must be available for sodium mixing. The possibility of upgrading the Direct Heat Removal System, possibly with higher capacity electromagnetic pumps and a higher capacity Overflow Heat Exchanger, in order to remove the sodium mixing requirements should be investigated. The generic cause susceptibilities and the common manufacturers identified in the analysis should aid design personnel in pinpointing potential common cause failure mechanisms.

This common cause failure analysis of the CRBRP SHRS does not take credit for the natural circulation of sodium in the primary heat transport loops. Inclusion of this mode of decay heat removal in the analysis would cause significant changes in the results.

For the limit of resolution of the fault trees used for this work, the CRBRP SHRS appears relatively resistant to common cause failures when compared to other analysis results of this type.[4,22]

4.2 CONCLUSIONS REGARDING THE AUTOMATED PROCEDURE FOR COMMON CAUSE FAILURE ANALYSIS OF COMPLEX SYSTEMS

The automated procedure presented in this thesis offers several advantages to the analyst.

1. The need for a complete list of hardware minimal cut sets for the system failure of interest is eliminated.
2. Highly complex systems can be analyzed.
3. The analyst can construct a permanent library of common cause failure analysis data.

The automated procedure is limited in that it could "bog down" in complex systems that are prone to common cause failures at the subsystem level. The large number of intermediate results produced in this situation could overwhelm the automated procedure, since only three dummy events can be handled at any one dissection point. The methodology also lacks the capability to identify common cause failures resulting from increased strain on one component due to the failure of another component. Preparing the input to the automated procedure is tedious, as it is with all methods for common cause failure analysis.

4.3 RECOMMENDATIONS CONCERNING THE CRBRP SHRS COMMON CAUSE FAILURE ANALYSIS

A common cause failure analysis of the CRBRP SHRS which considers both forced and natural convection cooling of the reactor core should be performed. The results of that analysis could be used to show the increased capability of the SHRS when natural circulation of sodium is employed.

4.4 RECOMMENDATIONS CONCERNING THE AUTOMATED PROCEDURE FOR COMMON CAUSE FAILURE ANALYSIS OF COMPLEX SYSTEMS

Further automation of the synthesis procedure is needed. A single computer code which utilizes both the fault tree description and the common cause failure analysis would substantially reduce the time and cost of the analysis.

LIST OF REFERENCES

LIST OF REFERENCES

1. Fussell, J. B., et al., "Techniques for Qualitative Analysis of Common Cause Failures," A Collection of Methods for Reliability and Safety Engineering, ANCR-1273, April, 1976.

2. "Reliability Manual for Liquid Metal Fast Breeder Reactors," General Electric Company, Schenectady, New York, SRD-75-064, December, 1975, pp. 7.3-1 - 7.3-2.

3. Williams, D. W., "Common Mode Failures in U.S. Commercial Power Reactors," Master's Thesis, The University of Tennessee, Knoxville, June, 1972, p. iii.

4. Wagner, D. P., "A Procedure For Qualitative Common Cause Failure Analysis of Complex Systems," Master's Thesis, The University of Tennessee, Knoxville, August, 1977.

5. "CRBRP Preliminary Safety Analysis Report," Project Management Corporation, April, 1975, Chapter 5.

6. Hottel, R. E., Louison, R., Boardman, C. E., and Kiley, M. J., "CRBRP Decay Heat Removal Systems," unpublished.

7. Wagner, D. P., Cate, C. L., and Fussell, J. B., "Common Cause Failure Analysis Methodology for Complex Systems," Nuclear Systems Reliability Engineering and Risk Assessment, SIAM, Philadelphia, 1977, pp. 289-313.

8. Fussell, J. B., "Fault Tree Analysis - Concepts and Techniques," Generic Techniques in System Reliability Analysis, Noordhoff, Leyden, 1976, pp. 133-162.

9. Burdick, G. R., Marshall, N. H., and Wilson, J. R., COMCAN - A Computer Program for Common-Cause Analysis, ANCR-1314, May, 1976.

10. Cate, C. L., and Fussell, J. B., BACFIRE - A Computer Program for Common-Cause Analysis, NERS-77-02, Nuclear Engineering Department, The University of Tennessee, Knoxville, May, 1977.

11. Worrell, R. B., and Stack, D. W., Common-Cause Analysis Using Sets, SAND 77-1832, December, 1977.

12. "Clinch River Breeder Reactor Project," Nuclear Engineering International 19 (221), October, 1974, pp. 837-865.

13. "Clinch River Breeder Reactor Plant Design Description," CRBRP-PMC-77-06, 1977.

14. Fussell, J. B., et al., "The Implementation of Phased Mission Techniques to Nuclear Systems Analysis," A Collection of Methods for Reliability and Safety Engineering, ANCR-1273, April, 1976.

15. Ziehms, H., "Reliability Analysis of Phased Missions," Thesis, Naval Postgraduate School, Monterey, California, December, 1974.

16. Hottel, R. E., personnel communication, May, 1978.

17. Arendt, J. S., et al., A Reliability Assessment of the Clinch River Breeder Reactor Plant Shutdown Heat Removal System. NUREG-01-76, September, 1976.

18. "Clinch River Breeder Reactor Plant Project 1977 Technical Progress Report," Westinghouse Electric Corporation, CRBRP-ARD-0211, 1977.

19. "Clinch River Breeder Reactor Plant Project 1976 Technical Progress Report," Westinghouse Electric Corporation, CRBRP-ARD-0171, 1976.

20. "Clinch River Breeder Reactor Plant Project Decay Heat Removal Studies," Westinghouse Electric Corporation, WARD-D-0217, 1978.

21. Fussell, J. B., Henry, E. B., and Marshall, N. A., MOCUS - A Computer Program To Obtain Minimal From Fault Trees, ANCR-1156, August, 1974.

22. Campbell, D. J., et al., A Reliability Assessment of the Clinch River Breeder Reactor Safety Related Electrical Power Supply System, NERS-78-01, Nuclear Engineering Department, The University of Tennessee, Knoxville, January, 1978.

APPENDICES

APPENDIX I

USER'S MANUAL FOR BACFIRE II

BACFIRE II - A COMPUTER PROGRAM TO AID IN COMMON CAUSE FAILURE ANALYSIS OF COMPLEX SYTSTEMS

J. J. Rooney

J. B. Fussell

August, 1978

Department of Nuclear Engineering
The University of Tennessee
Knoxville, Tennessee 37916

ACKNOWLEDGEMENTS

Dr. G. R. Burdick, Dr. D. M. Rasmuson, and Mr. J. R. Wilson are acknowledged for their many helpful suggestions and comments. Mr. D. P. Wagner is acknowledged for his guidance during the course of this project.

ABSTRACT

This document is the user's manual for BACFIRE II, a computer program to aid in the common cause failure analysis of complex systems. The methods of common cause failure analysis used in BACFIRE II are presented. Extensive description of the input to BACFIRE II is given. Results of the analysis are system modes of failure which share a common potential cause of failure.

TABLE OF CONTENTS

FOR APPENDIX I

			PAGE
	ACKNOWLEDGEMENTS	(1)	34
	ABSTRACT	(2)	35
I-I.	INTRODUCTION	(4)	37
I-II.	SUPPORTING CONCEPTS	(6)	39
	A. Primary and Secondary Failures	(6)	39
	B. Domain	(6)	39
	C. Sensitivity Ranking	(7)	40
	D. Common Cause Failure Analysis as Used in BACFIRE II	(7)	40
I-III.	SYNTHESIS PROCEDURE	(11)	44
I-IV.	DESCRIPTION OF INPUT TO BACFIRE II	(15)	48
I-V.	OUTPUT DESCRIPTION	(30)	63
I-VI.	REFERENCES	(31)	64
	APPENDIX I-A: BASIC EVENT CODING INFORMATION	(32)	65
	APPENDIX I-B: SAMPLE PROBLEM	(40)	73
	APPENDIX I-C: SAMPLE PROBLEM INPUT	(49)	82
	APPENDIX I-D: SAMPLE PROBLEM OUTPUT	(53)	86

I-I. INTRODUCTION

BACFIRE II is a computer program, written in FORTRAN IV for the IBM 360/65 computer, to aid in the common cause failure analysis of complex systems. A common cause failure is any occurrence or condition that causes multiple component failures.[1] The methodology used in BACFIRE II only identifies potential common cause situations that can cause a specified system failure to occur. Users of BACFIRE II should be familiar with the information concerning common cause failure analysis that is contained in References 1 and 3.

The modes of system failure are known as minimal cut sets.[2] A minimal cut set is a smallest group of component failures, called basic events, that are collectively sufficient to cause the system failure of interest. A problem in the computer aided common cause failure analysis of complex systems has been that all the minimal cut sets must be determined for the system failure of interest. While these minimal cut sets should reflect only hardware failures, determining this complete list of minimal cut sets becomes a difficult and often impossible task for a complex system.

BACFIRE II is similar to BACFIRE[4] and COMCAN[5], and utilizes much of the methodology employed in these two programs; however, BACFIRE and COMCAN are disadvantaged by requiring a complete list of minimal cut sets as input. BACFIRE II overcomes this problem by employing the dummy event procedure developed by Wagner.[3,6] This synthesis procedure enables the analyst to carry out a common cause failure analysis of a system without determining all the minimal cut sets for that system. By using BACFIRE II, a common cause failure

analysis can be performed in concert with a system safety and reliability analysis without a great deal of preplanning in the previous steps of the analysis.

BACFIRE II is limited in that it could "bog down" in complex systems that are prone to common cause failures. The methodology also lacks the capability to identify common cause failures resulting from increased strain on one component due to the failure of another component. For example, the failure of one structural support due to the increased load on it from the failure of another structural support will not be identified as a source of common cause failure by BACFIRE II. Preparing the input to BACFIRE II is tedious, as it is with all methods for common cause failure analysis.

I-II. SUPPORTING CONCEPTS

A. Primary and Secondary Failures

For the purpose of common cause failure analysis, component malfunctions are divided into two classes:

1. Primary Failures
2. Secondary Failures.

A primary failure is a component malfunction for which the component itself is held accountable. A secondary failure is a component malfunction for which the component itself is not held accountable. A light bulb in which the filament opens during normal operation is an example of a primary failure.

Examples of secondary failures are a resistor being overheated, causing it to open circuit, and a switch being struck causing it to open. The excessive temperature and impact, which are responsible for the component malfunctions, are the causes of secondary failure. A component may have many different secondary failure susceptibilities.

B. Domain

Barriers confine some causes of secondary failure. The volume defined by the barriers to the cause of secondary failure is called the domain of the cause of secondary faiure. Rooms are sometimes domains for many causes of secondary failure such as moisture and temperature. Ventilation systems can often spread airborne causes of secondary failure such as dust and gases to many rooms thereby creating a relatively large domain. A diagram of all pertinent domains of a secondary cause of failure is called a cause of secondary failure map.

C. Sensitivity Ranking

Components vary in their response to a potential cause of secondary failure. For example, breaker switches vary from light duty to heavy duty. One type might fail if jarred while another might not fail unless it is shaken more violently. Both switches are susceptible to vibration; however, the sensitivity to the cause of secondary failure is less for the latter case. The relative rank of the sensitivity is high for the light duty breaker switch and low for the heavy duty breaker switch. The sensitivity rank of a basic event with respect to a specific secondary failure cause is expressed as an integer from zero to nine (usually subjectively assigned by the analyst). A zero sensitivity means a low tendency to fail, while nine reflects a high tendency to fail.

D. Common Cause Failure Analysis as Used in BACFIRE II

The objective of BACFIRE II is to identify "common cause candidates" and the "qualitative failure characteristics" which cause a minimal cut set to be identified as a common cause candidate. A minimal cut set will be identified as a common cause candidate by either of two criteria.

The first criterion is met if all the basic events in a minimal cut set share a condition which alone may increase the probability of multiple component failures. Some examples of such conditions are listed in Table I-1 and are referred to as "special conditions." An example of a common special condition is a common maintenance crew if all the components implied by the basic events of a minimal cut set are serviced by the same maintenance crew.

TABLE I-1

EXAMPLES OF SPECIAL CONDITIONS FOR THE FIRST CRITERION

SYMBOL	CONDITION	FIRST SOURCE
C	Calibration	Misprinted calibration instructions.
N	Energy Flow Path	Location in same hydraulic loop.
E	Energy Source	Common drive shaft, same power supply.
M	Maintenance	Incorrect procedure, inadequately trained personnel, same crew.
T	Test Procedure	Faulty test procedures which may affect all components normally tested together.
B	Manufacturer	All components constructed by same manufacturer

The second criterion is met if all the basic events in a minimal cut set are susceptible to the same secondary failure cause and are located in the same domain for that failure cause. An example of this type of common cause candidate is a minimal cut set such that all the components implied by the basic events in a minimal cut set fail when exposed to excessive heat and no barrier to heat exists between the components. Some examples of the causes of secondary failure which have been used are listed in Table I-2.

A list of qualitative failure characteristics is necessary for the BACFIRE II approach in order to maintain continuity throughout the analysis. The list should be of generic causes such that each entry represents a class of secondary failure causes and special conditions since the number of specific secondary failure causes and special conditions is enormous. The resolution of these classes should be detailed enough to avoid redundancy and broad enough to maintain physical significance. For example, vibration and impact are preferable entries in the list to pipe whip, water hammer, earthquake, machinery in motion, and other causes. This list can then be organized into categories. One scheme is to divide the list according to the nature of the generic cause, such as thermal, chemical, or mechanical. To aid input preparation for BACFIRE II, three categories are utilized for the second criterion. Searching for commonalities by BACFIRE II is carried out within a category, but not among categories. The secondary failure characteristics of the first criterion must be separated from those of the second criterion. These lists are only examples and can be changed to reflect the important susceptibilities and special conditions of the system being analyzed.

TABLE I-2

EXAMPLES OF SUSCEPTIBILITIES FOR THE SECOND CRITERION

SYMBOL	SUSCEPTIBILITY	EXAMPLE SOURCE
Category I		
I	Impact	Pipe whip, water hammer, earthquake, structural failure.
U	Vibration	Machinery in motion, earthquake.
P	Pressure	Explosion, pump overspeed, flow blockage.
S	Stress	Thermal stress at welds.
T	Temperature	Fire, lightning, coolant system faults.
C	Current	Short circuit.
Category II		
G	Grit	Dust, metal fragments.
M	Moisture	Steam leak, valve leak.
C	Conducting medium	Moisture conducting gases.
R	Radiation damage	Neutron sources, sources of ionizing radiation.
Category III		
A	Acid Corrosion	Acid spills, maintenance accident.
O	Oxidation Corrosion	Unnatural water environment.
R	Chemical Reaction	Galvanic corrosion, fuel cladding interaction.
B	Biological Hazard	Poison gases, explosions.

I-III. SYNTHESIS PROCEDURE

The most difficult problem in the common cause failure analysis of complex systems is handling the huge mass of information necessary to the analysis. Computer aided common cause failure analysis becomes a difficult problem due to the large number of minimal cut sets given by a complex system fault tree.

A synthesis procedure[3,6] has been proposed by D. P. Wagner which enables the analyst to obtain the common cause candidates for the system failure of interest, called the TOP event, without determining all the minimal cut sets for the system failure of interest. The complex system fault tree is dissected into smaller fault trees for which all the minimal cut sets can be determined. The minimal cut sets found for the branches are termed intermediate minimal cut sets. A common cause failure analysis is performed on these cut sets, resulting in intermediate common cause candidates. Minimal cut sets for the system failure of interest are obtained by replacing the dissected portion of the fault tree with dummy events. At the completion of the analysis, the dummy events are expanded using the intermediate common cause candidates and the common cause candidates for the system failure of interest are constructed. The results are thereby identical to those that would be obtained if all the minimal cut sets for the TOP event were used.

If the analyst desires, the common cause failure analysis of the intermediate minimal cut sets can be omitted. However, if the number of intermediate minimal cut sets is extremely large and the analyst foresees a much smaller number of intermediate common cause can-

didates, it would be advantageous to perform an intermediate common cause failure analysis. The expansion of the dummy events requires a significant amount of computer resources, so that savings can be made by reducing the number of minimal cut sets used in the expansion process.

There are two guidelines in deciding the dissection points in the fault tree:

1. The number of minimal cut sets in the dissected branch must be small enough to allow their determination with acceptable computer resources.
2. The intermediate minimal cut sets preferably should contain two or more basic events because all single event cut sets must necessarily be kept for inclusion in the upper level of the analysis.

Dummy events can be manipulated in two ways. Dummy events can be either separate or nested. A dummy event is considered separate if the minimal cut sets representing that dummy event contain only basic events. The analysis can also be performed in such a manner as to produce nested dummy events. A dummy event is considered nested if the minimal cut sets representing that dummy event contain both basic events and other dummy events. At the lowest level of the analysis, dummy events must be separate.

The course of the analysis is shown in the program flow chart of Figure I-1. The title information and Data Set One are read (steps one through three). Data Set Two through Five are read and analyzed for errors (steps four and five). The programs check to see if the

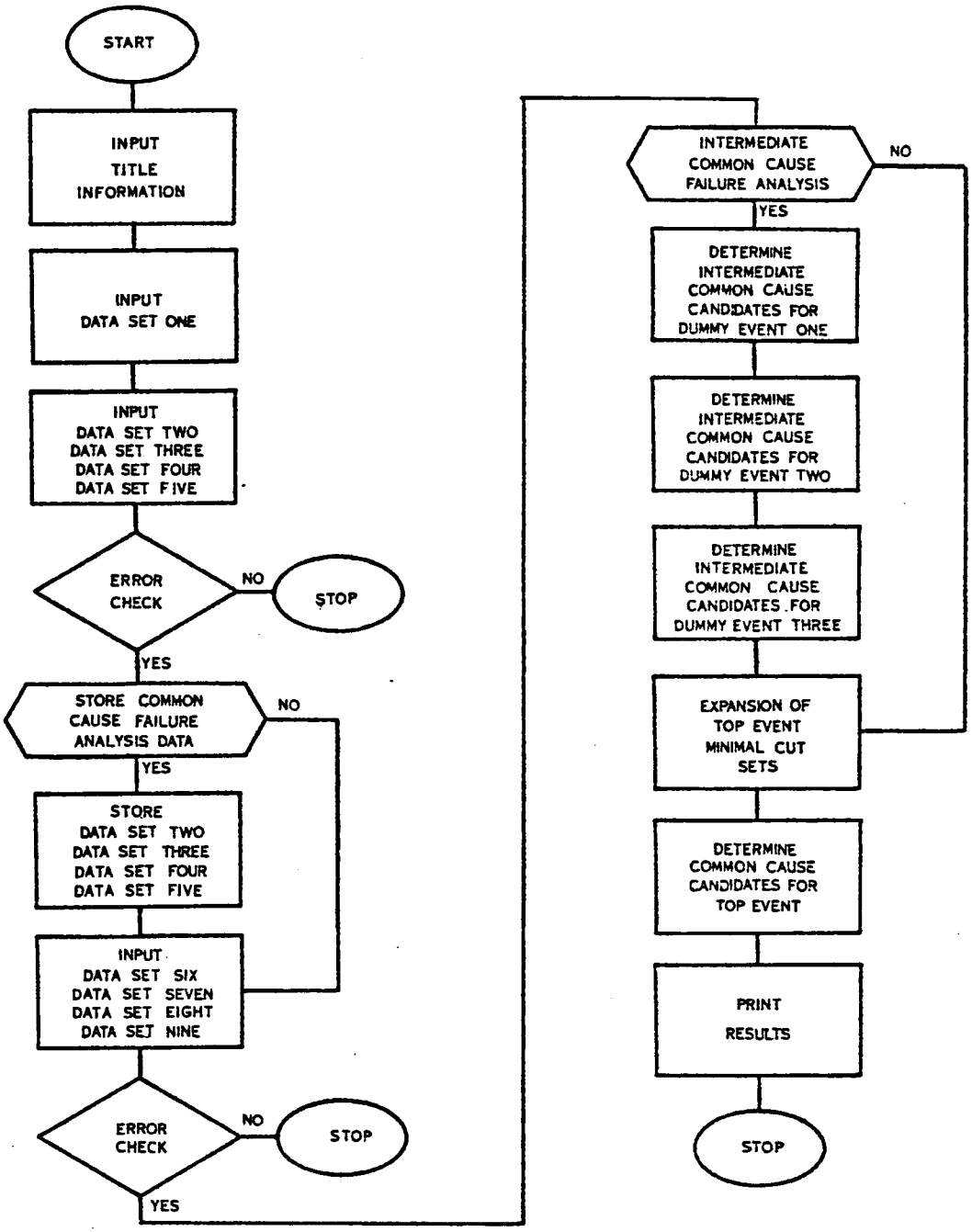

Figure I-1. BACFIRE II Flow Chart.

analyst desires to construct a permanent library of common cause failure analysis data (steps six and seven). Data Sets Six through Ten are read and analyzed for errors (steps eight and nine). The program checks to see if an intermediate common cause failure analysis is desired (step ten). This analysis is performed then if requested (steps eleven through thirteen). The common cause candidates for the TOP EVENT are then determined and the results are printed (steps fifteen through seventeen).

I-IV. DESCRIPTION OF INPUT TO BACFIRE II

The information needed for BACFIRE II aided common cause failure analysis is:

1. Title and Job Information
2. Data Set One: Control Information
3. Data Set Two: Event Definition
4. Data Set Three: Event Location References
5. Data Set Four: Causes of Secondary Failure
6. Data Set Five: Manufacturer Library
7. Data Set Six: Minimal Cut Sets for the System Failure of Interest
8. Data Set Seven: Minimal Cut Sets for Dummy Event One
9. Data Set Eight: Minimal Cut Sets for Dummy Event Two
10. Data Set Nine: Minimal Cut Sets for Dummy Event Three

Data Sets One through Five must each be preceded by a card with an asterick(*) punched in column one and followed by a card with END punched in columns one through three.

1. Title and Job Information TITL1(I), TITL2(I)

The first card read by BACFIRE II should provide pertinent title information, while the second card is used to describe the specific job being run. Table I-3 contains a description of the coding for these cards. Two blank cards must be supplied when this option is not used.

2. Data Set One: Control Information

BACFIRE II has the capability of reading Data Sets Two through Five from cards and then writing them to a computer storage device.

TABLE I-3

DESCRIPTION OF INPUT FOR TITLE CARDS

FORTRAN VARIABLE	FORMAT	COLUMN	ADJUSTMENT
TITL1(I)	10A8	1-80	LEFT
TITL2(I)	10A8	1-80	LEFT

This allows the analyst to construct a permanent library of component information. BACFIRE II can then access this library when performing subsequent common cause failure analyses. Other options incude reading the minimal cut sets for the TOP event from either cards or a computer storage device, and also storing or punching the common cause candidates determined by BACFIRE II. Table I-4 contains a description of the input for Data Set One. Two card are always required for this data set.

Data Source SW. This switch indicates whether Data Sets Two through Five will be read from cards or computer storage device. By punching DATA, BACFIRE II will read the next four data sets from cards. Punching DISK indicates that the data will come from a computer storage device.

Logical Unit For Data Sets Two Through Five DD3. This switch allows the analyst to write Data Sets Two through Five to a computer storage device after they are initially read from cards. A zero is punched if this option is not used. When Data Sets Two through Five already reside on a computer storage device, DD3 represents the logical unit from which they will be read.

Logical Unit for Top Event Cut Sets ICS. If the minimal cut sets for the TOP EVENT are to be read from cards, ICS should be set to 5. Otherwise ICS should be the logical unit on which the minimal cut sets are stored.

Logical Unit For Common Cause Candidates SW5. BACFIRE II will punch or store the common cause candidates that it determines SW5 sets the logical unit that BACFIRE II will use.

Minimum Sensitivity IMPCO. IMPCO is used to restrict the common

TABLE I-4

DESCRIPTION OF INPUT FOR DATA SET ONE

FORTRAN VARIABLE	FORMAT	COLUMN	ADJUSTMENT
First Card			
SW	A8	1-8	LEFT
DD3	I5	11-15	RIGHT
ICS	I5	16-20	RIGHT
SW5	I5	21-25	RIGHT
IMPCO	I5	26-30	RIGHT
Second Card			
NWAG	I5	1-5	RIGHT
SW1	I5	6-10	RIGHT
SW2	A8	13-20	LEFT
SW3	I5	21-25	RIGHT
SW4	A8	27-35	LEFT
SW7	I5	36-40	RIGHT
SW8	A8	43-50	LEFT

cause failure analysis. The sensitivity ranking of each basic event in a minimal cut set must be greater than or equal to IMPCO for a common cause candidate to be printed. A zero must be punched if no minimum sensitivity is used.

Intermediate Common Cause Failure Analysis NWAG. BACFIRE II automatically performs intermediate common cause failure analyses of the dummy event minimal cut sets. This procedure can be suppressed by coding a 1 in the appropriate column. BACFIRE II will perform a common cause failure analysis for TOP EVENT minimal cut sets that do not contain dummy events. This also requires coding a 1 in the appropriate column. This variable is normally set to 0.

Logical Unit SW1 for Dummy Event One SW2. BACFIRE II requires the eight-character alphanumeric name, SW2, of Dummy Event One. The program also requires the logical unit, SW1, on which the minimal cut sets for Dummy Event One are stored. If only one dummy event is used, it must be identified using this set of parameters. This dummy event may have either one or both of the next two dummy events nested within it. If only one dummy event is nested within Dummy Event One, the dummy event must be identified as Dummy Event Two.

Logical Unit SW3 for Dummy Event Two SW4. SW3 is the logical unit for the minimal cut sets represented by Dummy Event Two. SW4 is the eight-character alphanumeric name of Dummy Event Two. If two dummy events are used, they must be identified using Dummy Event One and Dummy Event Two. Dummy Event Three may be nested within Dummy Event Two regardless of whether or not Dummy Event Two is nested within Dummy Event One.

Logical Unit SW7 for Dummy Event Three SW8. SW7 is the logical unit for the minimal cut sets represented by Dummy Event Three. SW8 is the eight-character alphanumeric name of Dummy Event Three. Dummy Event Three must be a separate dummy event.

3. Data Set Two: Event Definition

The second set of input for BACFIRE II defines each event by providing the event description, its location, causes of secondary failure and a relative ranking of the failure characteristics. An event definition must be supplied for each basic event that appears in the cut sets to be analyzed. Each event will require a minimum of two cards. Table I-5 contains a description of the input for Data Set Two.

Event Description C(I). Eight alphanumeric characters are used to identify a basic event. See Appendix I-A for details of an appropriate event naming scheme used during the Reactor Safety Study.[7] Any eight-character event description can be used, but it must be identical to the event descriptions used in the minimal cut sets.

Manufacturer MFG(I). A special data location is supplied for a particular special condition which deserves special consideration, usually manufacturer. This category will be checked based on the first criterion as are other special conditions. This variable is checked against Data Set Five to identify the particular common special condition.

Location LO(I,1). The first position in this array stores the number of locations used in defining the event.

Cause of Secondary Failure GCS(I,J,K). This array contains the

TABLE I-5

DESCRIPTION OF INPUT FOR DATA SET TWO

FORTRAN VARIABLE	FORMAT	COLUMN	ADJUSTMENT
One set of following cards for each basic event			
Card 1. One card for each event definition			
C(I)	A8	1-8	LEFT
MFG(I)	A1	44	
LO(I,1)	I4	47-50	RIGHT
GCS(I,J,K)			
Category 1	5A1	56-60	
Category 2	5A1	61-65	
Category 3	5A1	66-70	
Category 4	5A2	71-80	LEFT
Card 2. One card for each event definition			
LO(I,2)	A4	47-50	LEFT
IMP(I,J,K)			
Category 1	5I1	56-60	
Category 2	5I1	61-65	
Category 3	5I1	66-70	
Category 4	5I2	71-80	RIGHT
Card 3. One card for each additional event location			
LO(I,J)	A4	47-50	LEFT

qualitative failure characteristic assigned to each event in its respective category. There are three blocks for up to five one-character codes in each of three cause of secondary failure susceptibility categories. The last block is for up to five two-character codes from the fourth category for special conditions. The related sensitivity ranking of each failure characteristic is supplied in the same column as the susceptibility condition on the data card immediately following it.

Location LO(I,2). This position in the LO array stores the first location identified with the basic event.

Sensitivity Ranking IMP(I,J,K). The sensitivity ranking assigned to each failure characteristic is stored in this array and is input in the same column as the susceptibility or special condition on the card immediately following the event description card (and on the first location card).

Location LO(I,J). These positions record any additional locations associated with a basic event. The cards are only supplied when more than one location has been identified for the basic event.

4. Data Set Three: Event Location References

This data block cross references the location of the event definition to the proper domain on the various cause of secondary failure maps. Table I-6 contains the input description for Data Set Three.

Number of Maps NMAP. This data is supplied only once and on the first card following the asterisk card. This is the number of different causes of secondary failure maps which are used in the system analysis. If this is zero, the card can be left blank, and no other

TABLE I-6

DESCRIPTION OF INPUT FOR DATA SET THREE

FORTRAN VARIABLE	FORMAT	COLUMN	ADJUSTMENT
One card			
NMAP	I5	1-5	RIGHT
One card for each location in Data Set One			
LOC(I)	A4	11-14	LEFT
MAP(I,1)	A4,1X	16-19,20	LEFT
MAP(I,2)	A4,1X	21-24,25	LEFT
.			
.			
.			

cards before the END card need to be supplied. This places all events in the same domain for each susceptibility for analysis by the second criterion.

Location and Domain LOC(I), MAP(I,J). Each event location identified in the event definition is identified again here. The location code, as it appeared in the event definition is followed by the domain code for the domain it appears in on map one, map two, etc. to map NMAP.

5. Data Set Four: Cause of Secondary Failure Library

This library references susceptibility and special condition descriptions with the codes, category and the domain map which is applicable to its barriers. The input description for Data Set Four is in Table I-7.

Qualitative Failure Characteristic SUS(I,J). A 24-character description of each susceptibility and special condition is located in this array. This information is used to identify the common susceptibility or common special condition in the program output.

Qualitative Failure Characteristic Code ASSUS(I). This is the susceptibility and special condition codes assigned the failure characteristic. These correspond to the susceptibilities and special conditions assigned the basic events in Data Set Two.

Category CTG(I). This variable identifies the category of failure characteristic code. The same code can be used in as many different categories as necessary. It is necessary to specify the special condition code as being used in category four.

Map MP(I). This variable identifies the cause of secondary failure with the map used to represent its domains. For special con-

TABLE I-7

DESCRIPTION OF INPUT FOR DATA SET FOUR

FORTRAN VARIABLE	FORMAT	COLUMN	ADJUSTMENT
One card per qualitative failure characteristic			
SUS(I,J)	3A8	1-24	LEFT
ASSUS(I)	A2	30-31	LEFT
CTG(I)	I1	35	
MP(I)	I2	39-40	RIGHT

ditions, no map is necessary and this field can be left blank.

6. Data Set Five: Manufacturer Library

This library serves a similar purpose for special conditions as Data Set Four did for causes of secondary failure. The numerous different possible manufacturers can create a long list of their own. For these reasons a separate data array and library were created for use in determining the common condition of manufacturer. However, since this is checked by the first criterion, any significant special condition can be checked here. Coding on the event definitions is in Manufacturer MFG(I). A sensitivity of 9 is assigned a common cause candidate found in Data Set Five. Description for the input to Data Set Five is given in Table I-8.

Manufacturer MANU(I,J). A 24-character description of the manufacturer is stored in this array. This information is used to identify the common special condition in the program output.

Manufacturer Code AMAN(J). This is the manufacturer code assigned the potential common cause of failure of manufacturer. These codes correspond to the manufacturer code assigned in Data Set Two.

7. Data Set Six: Minimal Cut Sets for the System Failure of Interest

This data set provides BACFIRE II with the minimal cut sets for the system failure of interest. These may or may not contain dummy events. These minimal cut sets may be read from cards or from a computer storage device. If read from cards this data set directly follows the END card of Data Set Five. An asterisk card is not needed. These minimal cut sets can be read from a computer storage device, after having been placed there using the appropriate option in

TABLE I-8

DESCRIPTION OF INPUT FOR DATA SET FIVE

FORTRAN VARIABLE	FORMAT	COLUMN	ADJUSTMENT
One card per manufacturer			
MANU(I,J)	3A8	1-24	LEFT
AMAN(I)	A1	30	

MOCUS[8]. Table I-9 contains the Data Set Six input description.

Number of Basic Events NCSM. This is the number of basic events and dummy events which appear in a minimal cut set.

Basic Event Description CSM(I). The eight-character alphanumeric descriptions of the basic events and dummy events appearing in the minimal cut set are stored in this array.

8. Data Set Seven: Minimal Cut Sets for Dummy Event One

The minimal cut sets for Dummy Event One are used to expand the minimal cut sets for the TOP EVENT which contain Dummy Event One. The minimal cut sets for Dummy Event One must be read from a computer storage device. The coding format is identical to that of Data Set Six.

9. Data Set Eight: Minimal Cut Sets for Dummy Event Two

The minimal cut sets for Dummy Event Two can be used to expand either the minimal cut sets for the TOP EVENT or Dummy Event One which contain Dummy Event Two. The minimal cut sets for Dummy Event Two must be read from a computer storage device. The coding formt is identical to that of Data Set Six.

10. Data Set Nine: Minimal Cut Sets for Dummy Event Three

The minimal cut sets for Dummy Event Three can be used to expand either the minimal cut sets for the TOP EVENT, Dummy Event One, or Dummy Event Two. The minimal cut sets for Dummy Event Three must be read from a computer storage device. The coding for this data set is identical to Data Set Six.

TABLE I-9

DESCRIPTION OF INPUT FOR DATA SET SIX

FORTRAN VARIABLE	FORMAT	COLUMN	ADJUSTMENT
Minimum of one card per cut set			
NCSM	I5	1-5	RIGHT
CSM(1)	A8	11-18	LEFT
CSM(2)	A8	21-28	LEFT
.			
.			
.			

I-V. OUTPUT DESCRIPTION

The output from BACFIRE II contains:

1. A listing and summary of Data Sets One through Five.
2. The common cause candidates, their failure commonalities and severity information.
3. The potential causes of failure identified by BACFIRE II.

BACFIRE II provides a listing of Data Sets One through Five. A summary of the common cause failure analysis data is printed, as is a summary of the computer control information.

The list of common cause candidates contains those cut sets that are found to have commonalities with sensitivities higher than IMPCO. The minimum, maximum, average, and sum of the sensitivities of the basic events to the commonality are also listed for analyst reference.

A list of all the qualitative failure characteristics input in Data Sets Four and Five is printed. Minimal cut sets having a potential cause of failure from Data Set Four are identified by common cause candidate number and the minimum sensitivity within the cut set. Minimal cut sets which have a common manufacturer from Data Set Five are represented by common cause candidate number.

I-VI. REFERENCES

1. Fussell, J. B., Burdick, G. R., Rasmuson, D. M., Wilson, J. R., and Zipper, J. C., A Collection of Methods for Reliability and Safety Engineering, ANCR-1273, April, 1976.

2. Fussell, J. B., "Fault Tree Analysis - Concepts and Techniques," Generic Techniques in System Reliability Analysis, Noordhoff, Lyden, 1976, pp. 133-162.

3. Wagner, D. P., "A Procedure For Qualitative Common Cause Failure Analysis of Complex Systems," Master's Thesis, The University of Tenessee, Knoxville, August 1977.

4. Cate, C. L., and Fussell, J. B., BACFIRE - A Computer Program for Common-Cause Analysis, NERS-77-02, Nuclear Engineering Department, The University of Tennessee, Knoxville, May, 1977.

5. Burdick, G. R., Marshall, N. H., and Wilson, J. R., COMCAN - A Computer Program for Common-Cause Analysis, ANCR-1314, August, 1976.

6. Wagner, D. P., Cate, C. L., and Fussell, J. B., "Common Cause Failure Analysis Methodology for Complex Systems," Nuclear Systems Reliability Engineering and Risk Assessment, SIAM, Philadelphia, 1977, pp. 289-313.

7. Fussell, J. B., Henry, E. B., and Marshall, N. A., MOCUS - A Computer Program to Obtain Minimal Sets from Fault Trees, ANCR-1156, August, 1974.

8. "Reactor Safety Study," WASH-1400 (NUREG-75/014), United States Nuclear Regulatory Commission, October, 1975.

APPENDIX I-A

BASIC EVENT CODING INFORMATION

Event Naming[7]

Each unique basic input event shown on the logic model is given a unique eight-character code name in order to facilitate proper evaluation of the logic model. For example, a component failure event may appear several places on a logic model and on more than one logic model, but if it is the same component with the same failure mode it will have the same name. The coding scheme identifies events by system, component type, component identification, and failure mode as shown below.*

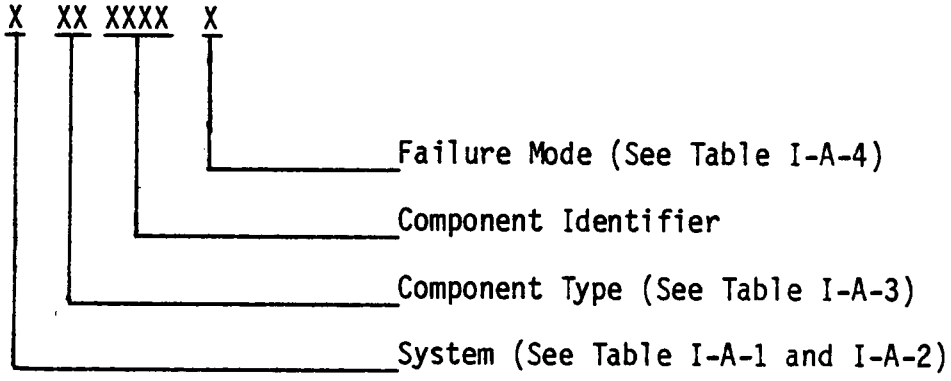

*The coding scheme described and used herein is a compromise of two coding schemes used in the construction of the PWR and BWR systems fault trees, respectively. It was desirable in the analysis of the systems to use where possible the component naming scheme used by the utility. These schemes differed in the two plants. The two naming schemes were modified somewhat to make them compatible where used in this report.

TABLE I-A-1

BWR SYSTEM IDENTIFICATION CODE

Code	System Name
1	Main Steam
2	Reactor Recirculation and Automatic Depressurization (ADS)
3	Reactor Protective System (RPS)
4	Feedwater
8	Offgas System
9	Vapor Suppression System (VSS)
A	Core Spray Injection System (CSIS)
B	Low Pressure Coolant Injection System (LPCIS)
C	Nuclear Boiler Vessel Instrumentation
D	High Pressure Service Water System (HPSWS)
E	Service Water
F	High Pressure Coolant Injection System (HPCIS)
L	Reactor Core Isolation Cooling System (RCICS)
M	Emergency Service Water System (ESWS)
N	Radwaste
Q	Electrical Power

TABLE I-A-1 (continued)

Code	System Name
R	Hydraulic Control Unit
S	Containment Leakage (CL)
U	Chilled Water
V	Standby Gas Treatment System (SBGTS)
X	Diesel Generator
Y	Containment Atmosphere Dilution System
Z	Reactor Building Heating and Ventilation
#	Fuel Pool

TABLE I-A-2

PWR SYSTEM IDENTIFICATION CODE

Code	System Name
A	Accumulator (ACC)
G	Containment Leakage (CL)
N	Consequence Limiting Control System (CLCS)
K	Containment Heat Removal System (CHRS)
C	Containment Spray Injection System (CSIS)
D	Containment Spray Recirculation System (CSRS)
J	Electrical Power (EPS)
F	High Pressure Injection System (HPCIS)
H	High Pressure Recirculation System (HPCRS)
B	Low Pressure Injection System (LPIS)
E	Low Pressure Recirculation System (LPRS)
L	Sodium Hydroxide Addition System (SHAS)
I	Reactor Protection System (RPS)
M	Safety Injection Control System (SICS)
P	Auxiliary Feedwater (AF)

TABLE I-A-3

COMPONENT CODE

Mechanical Components			
Accumulator	AC	Sluice Gate	SL
Blower	BL	Sump	SP
Control Rod Drive Unit	CD	Subtree	ST
Cover Plate	FA	Tank	TK
Damper	DM	Tubing	TG
Diesel	DL	Turbine	TB
Expansion Joint	XJ	Valve, Check	CV
Filter or Strainer	FL	Valve, Explosive Operated	EV
Gas Bottle	GB	Valve, Hydraulic Operated	HV
Gasket	GK	Valve, Manual	XV
Heat Exchanger	HE	Valve, Motor Operated	MV
Nozzle	NZ	Valve, Pneumatic Operated	AV
Orifice	OR	Valve, Relief	RV
Pipe	PP	Valve, Safety	SV
Pipe Cap	CP	Valve, Solenoid Operated	KV
Pressure Vessel	PV	Valve, Stop Check	DV
Pump	PM	Valve, Vacuum Relief	VV
Reactor Control Rod	ED	Vent	VT
Refrigeration Unit	RF	Well	WL

TABLE I-A-3 (continued)

Electrical Components			
Amplifier	AM	Ground Switch	GS
Annunciator	AN	Relay	RE
Battery	BY	Relay or Switch Contact	CN
Battery Charger	BC	Reset Switch	RS
Bus	BS	Resistor, Temp. Device	RT
Cable	CA	Signal Comparator	AD
Circuit Breaker	CB	Switch, Pressure	PS
Clutch	CL	Switch, Torque	QS
Control Switch	CS	Switch, Temperature	TS
Coil	CO	Terminal Board	TM
Detector	DI	Diode or Rectifier	DE
DC Power Supply	DC	Fuse	FU
Flow Switch	FS	Generator	GE
Heating Element	HG	Heat Tracing	HT
Input Module	IM	Test Pushbutton	SB
Inverter (solid state)	IV	Thermal Overload	OL
Level Switch	ES	Timer	TI
Light	LT	Transformer, Current	CT
Limit Switch	LS	Transformer, Potential (or control)	PT

(38)

TABLE I-A-3 (continued)

Manual Switch	SW	Transformer, Power	TR
Motor	MO	Transmitter, Flow	TF
Motor Starter	MS	Transmitter, Level	TL
Neutron Detector	ND	Transmitter, Pressure	TP
Potentiometer	PT	Transmitter, Temperature	TT
Recorder	RC	Wire	WR
Lightning Arrester	LA	Event (where no component involved)	00

TABLE I-A-4

FAILURE MODE CODE

Failure Mode	Code
Closed	C
Disengaged	G
Does Not Close	K
Does Not Open	D
Does Not Start	A
Engaged	E
Exceeds Limit	M
Leakage	L
Loss of Function	F
Maintenance Fault	Y
No Input	N
Open	O
Open Circuit	B
Operational Fault	X
Overload	H
Plugged	P
Rupture	R
Short Circuit	Q
Short to Ground	S
Fault Transfer	T

APPENDIX I-B

SAMPLE PROBLEM

This example problem for BACFIRE II was developed by D. P. Wagner. Figure I-B-1 is the system logic model for a TOP event. Figure I-B-2 is the system logic model with the dummy events, DUMC, DUML, and DUMJ representing events C, L, and J. The minimal cut sets for the dummy events are found in Tables I-B-1 through I-B-3. The minimal cut sets for the TOP event are found in Table I-B-4.

The components along with their generic cause susceptibilities are listed in Table I-B-5. Manufacturer codes are given in Table I-B-6. The components have been assigned physical locations which correspond to the floor plan of Figure I-B-3. Some components are identified in more than one location. Figure I-B-4 is the three susceptibility maps used in the analysis. The I, S map is used for impact and stress, the T map for temperature, and the V map for vibration. The domain data is tabulated in Table I-B-7.

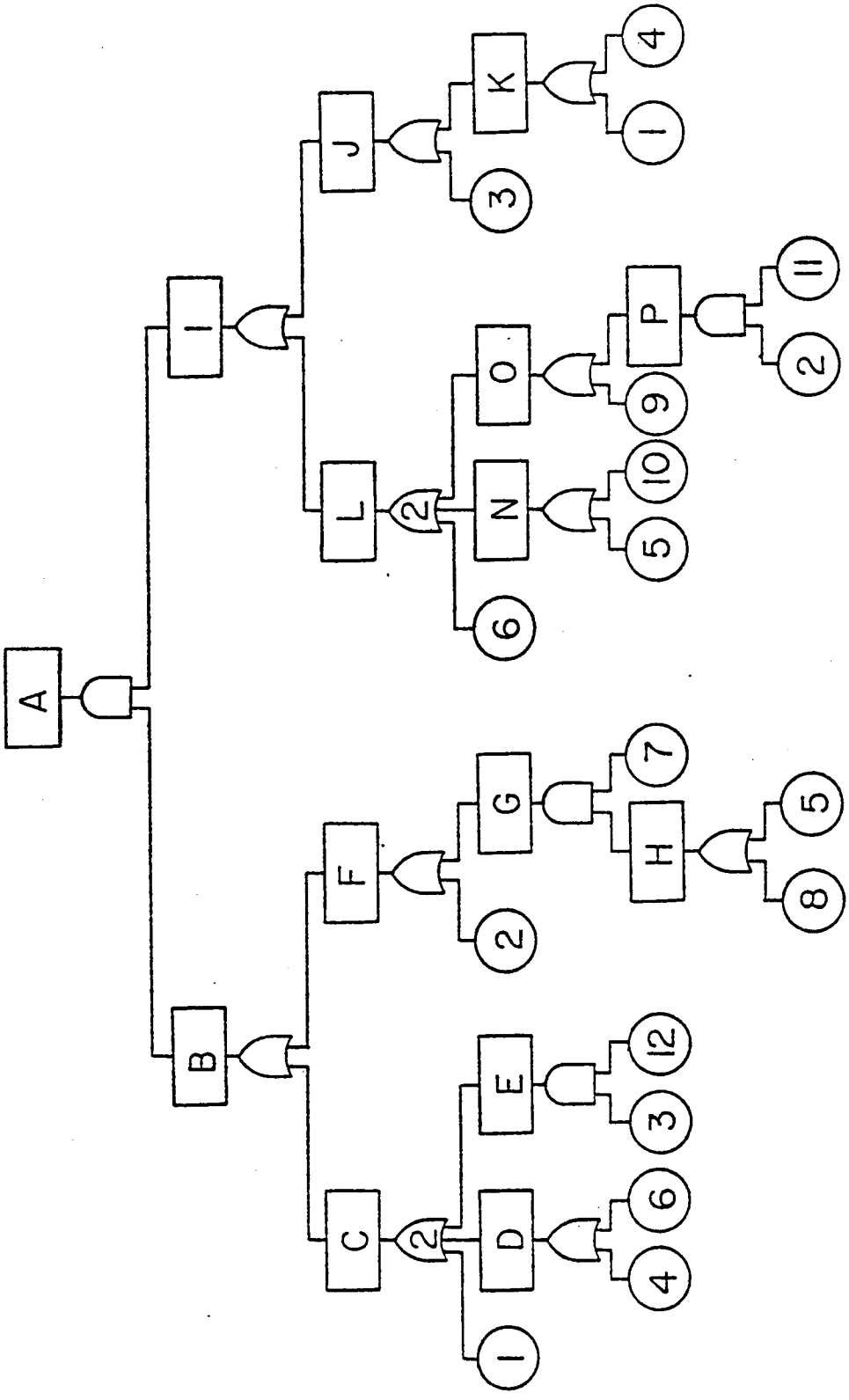

Figure I-B-1. Sample Problem Fault Tree.

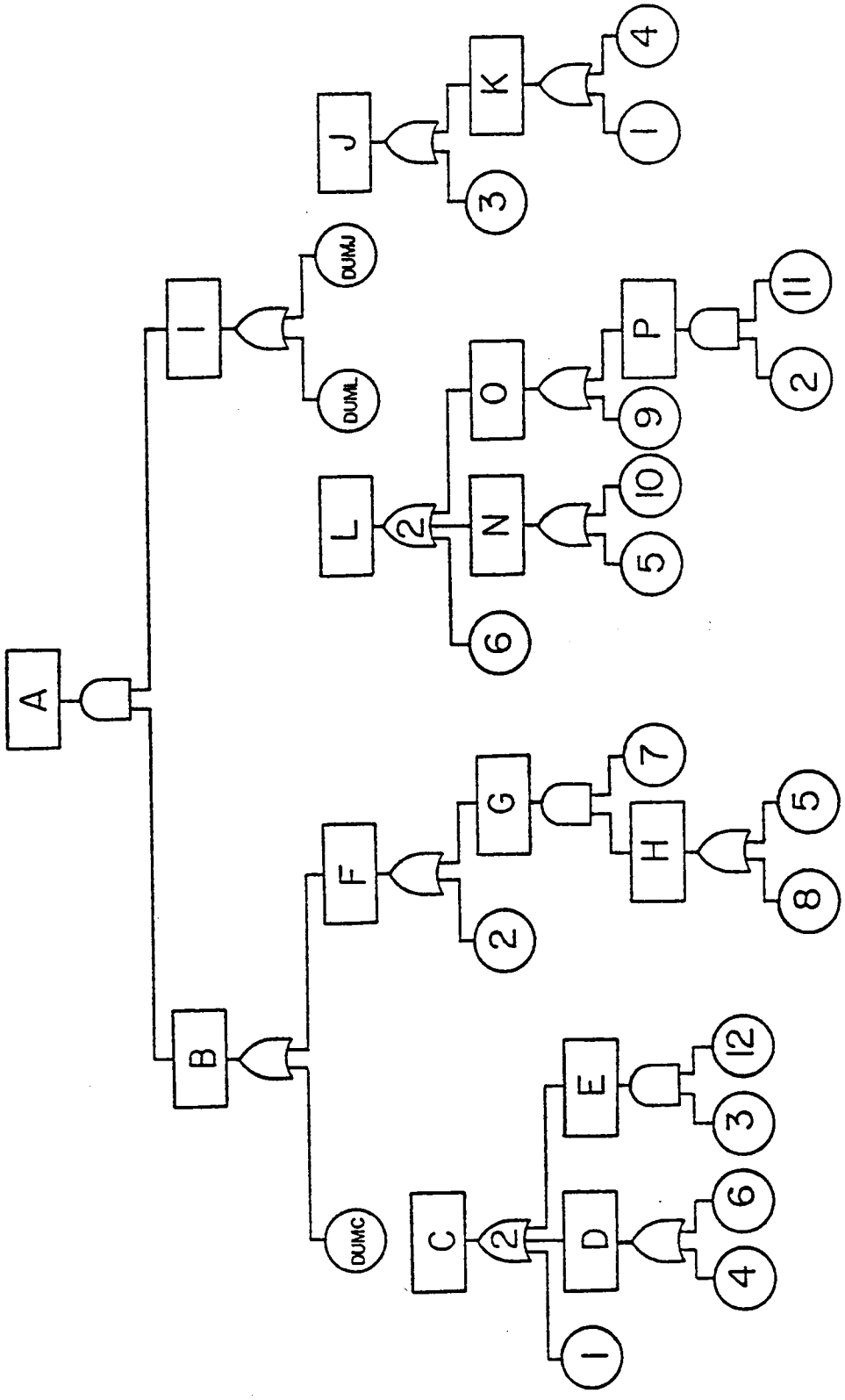

Figure I-B-2. Sample Problem Fault Tree With Dummy Events.

TABLE I-B-1 MINIMAL CUT SETS FOR DUMMY EVENT DUMC

1, 4	3, 4, 12
1, 6	3, 6, 12
1, 3, 12	

TABLE I-B-2 MINIMAL CUT SETS FOR DUMMY EVENT DUMJ

1
3
4

TABLE I-B-3 MINIMAL CUT SETS FOR DUMMY EVENT DUML

5, 6	2, 5, 11
6, 10	2, 10, 11
5, 9	2, 6, 11
6, 9	

TABLE I-B-4 MINIMAL CUT SETS FOR TOP EVENT A

DUMC, DUMJ	5, 7, DUMJ
DUMC, DUML	5, 7, DUML
2, DUMJ	7, 8, DUMJ
2, DUML	7, 8 DUML

TABLE I-B-5

COMMON CAUSE FAILURE DATA FOR THE SAMPLE PROBLEM

Basic Event	Physical Location	Manufacturer	Generic Cause Susceptibilities (Category 1)	Special Conditions (Category 2)
		Qualitative Failure Characteristics		
1	101 103 105 199	C	I, S	E2, O1, I1
2	105	B	I, S	E2, O1, I1
3	104	A	I, T	O1, I3
4	104	A	S, T	T2, I3
5	102	B	T, V	O2, I3
6	102 104 106	C	I, V	O1, I2
7	105	C	I, V, S	O2, I2
8	105	B	I, V, T	T2, I3
9	199	A	S	E1, I3
10	106	A	I, V, S, T	O2, I2
11	103 106 199	B	S, T	T2, I3
12	104	C	T	O1, I1

TABLE I-B-6

MANUFACTURERS FOR SAMPLE PROBLEM

Code	Manufacturer
A	Idaho Manufacturing Co.
B	Tennessee Tool Co.
C	Virginia Engineering Co.

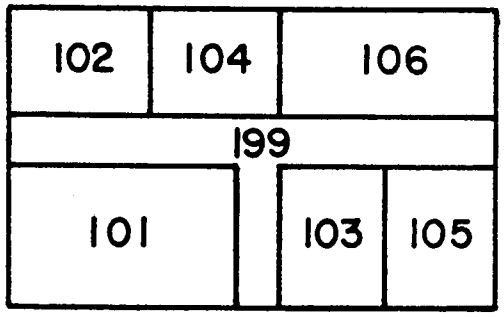

Figure I-B-3. Sample Problem Floor Plan.

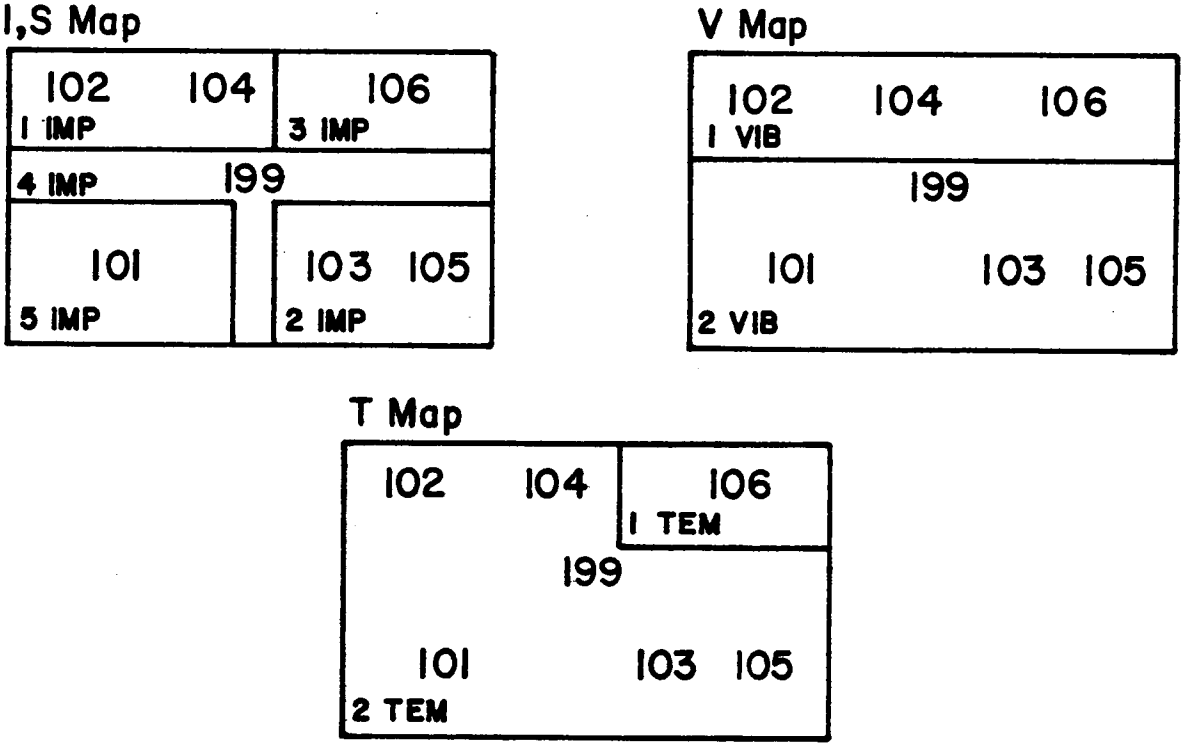

Figure I-B-4. Sample Problem Susceptibility Maps.

I,S Map, Impact and Stress
V Map, Vibration
T Map, Temperature

TABLE I-B-7

GENERIC CAUSE SUSCEPTIBILITY DOMAINS FOR THE SAMPLE PROBLEM

Generic Cause	Domain	Physical Location
I, S	1 IMP	102, 104
	2 IMP	103, 105
	3 IMP	106
	4 IMP	199
	5 IMP	101
T	1 TEM	106
	2 TEM	101, 102, 103, 104, 105, 199
V	1 VIB	102, 104, 106
	2 VIB	101, 103, 105, 199

APPENDIX I-C

SAMPLE PROBLEM INPUT

Appendix I-C shows the coded input for BACFIRE II analysis of the sample problem. Figure I-C-1 contains Data Sets One through Five and a summary of these data sets.

```
                                                                    PAGE   1
                                                  BACFIRE II VERSION 1 APRIL/78

                    * * * * * * * * * * * * * * * * * * * * * * * * * * * * * * * *
                    *                                                           *
                    *                      BACFIRE II                           *
                    *                                                           *
                    * A PROGRAM TO OBTAIN COMMON CAUSE CANDIDATES FOR COMPLEX SYSTEMS *
                    * * * * * * * * * * * * * * * * * * * * * * * * * * * * * * * *

                         COMMON CAUSE FAILURE ANALYSIS FOR EVENT A

                           SAMPLE PROBLEM FOR BACFIRE II


NUMBER OF BASIC EVENTS - - - - - - - - - - - - - - - - - - 12
NUMBER OF GENERIC CAUSE SUSCEPTABILITIES - - - - - - - - 12
SENSITIVITY CUT OFF - - - - - - - - - - - - - - - - - - - - 3
NUMBER OF MANUFACTURERS - - - - - - - - - - - - - - - - - - 3
NUMBER OF LOCATIONS - - - - - - - - - - - - - - - - - - - - 7
NUMBER OF MAPS USED - - - - - - - - - - - - - - - - - - - - 3
```

Figure I-C-1. Sample Problem Input.

```
      JOB TITLE:                 COMMON CAUSE FAILURE ANALYSIS FOR EVENT A                                                  PAGE   2
JOB DESCRIPTION:                    SAMPLE PROBLEM FOR BACFIRE II                                   BACFIRE II VERSION 1 APRIL/78

*****************************************************************************************************************************
                                                   INPUT TO BACFIRE II
*****************************************************************************************************************************

DATA SET ONE: CONTROL CARDS IMAGES
----+----I----+----I----+----I----+----I----+----I----+----I----+----I----+----I
DATA        21   25    7    3
    0   22  DUMC       23  DUML       24  DUMJ
DATA SET TWO: EVENT DEFINITIONS CARD IMAGES
----+----I----+----I----+----I----+----I----+----I----+----I----+----I----+----I
1                                       C     4     IS              E20111
                                            101     460000000000000 8 6 2 0 0
                                            103
                                            105
                                            199
2                                       B     1     IS              E20111
                                            105     460000000000000 8 6 2 0 0
3                                       A     1     IT              0113
                                            104     290000000000000 3 1 2 0 0
4                                       A     1     ST              T213
                                            104     850000000000000 6 9 0 0 0
5                                       B     1     TV              0213
                                            102     730000000000000 1 9 0 0 0
6                                       C     3     IV              12
                                            102     330000000000000 9 0 0 0 0
                                            104
                                            106
7                                       C     1     IVS             0212
                                            105     434000000000000 4 8 0 0 0
8                                       B     1     IVT             T213
                                            105     536000000000000 1 9 0 0 0
9                                       A     1     S               E113
                                            199     300000000000000 3 9 0 0 0
10                                      A     1     IVST            0212
                                            106     784200000000000 4 8 0 0 0
11                                      B     3     ST              T213
                                            103     850000000000000 6 9 0 0 0
```

Figure I-C-1. (continued)

```
JOB TITLE:                    COMMON CAUSE FAILURE ANALYSIS FOR EVENT A                                    PAGE   3
JOB DESCRIPTION:                  SAMPLE PROBLEM FOR BACFIRE II                                  BACFIRE II VERSION 1 APRIL/78

                                                  106
                                                  199
12                                              C   1      I                  0111
                                                  104      I00000000000000 6 2 0 0 0

DATA SET THREE: EVENT LOCATION REFERENCES CARD IMAGES
----+----I----+----I----+----I----+----I----+----I----+----I----+----I----+----I
    3
          101  5IMP 2TEM 2VIB
          102  1IMP 2TEM 1VIB
          103  2IMP 2TEM 2VIB
          104  1IMP 2TEM 1VIB
          105  2IMP 2TEM 2VIB
          106  3IMP 1TEM 1VIB
          199  4IMP 2TEM 2VIB

DATA SET FOUR: CAUSE OF SECONDARY FAILURE LIBRARY CARDIMAGES
----+----I----+----I----+----I----+----I----+----I----+----I----+----I----+----I
IMPACT                          S    1    1
STRESS                          T    1    2
TEMPERATURE                     V    1    3
VIBRATION                       Y    1    3
INSTALLATION CONTRCTR 1         I1   4    0
INSTALLATION CONTRCTR2          I2   4    0
INSTALLATION CONTRCTR 3         I3   4    0
TEST PROCEDURE 2                T2   4    0
OPERATOR 1                      O1   4    0
OPERATOR 2                      O2   4    0
ENERGY SOUPCE 1                 E1   4    0
ENERGY SOURCE 2                 E2   4    0

DATA SET FIVE: MANUFACTURERS CARD IMAGES
----+----I----+----I----+----I----+----I----+----I----+----I----+----I----+----I
IDAHO MANUFACTURING CO.         A
TENNESSEE TOOL CO.              B
VIRGINIA ENGINEERING CO.        C
```

Figure I-C-1. (continued)

APPENDIX I-D

SAMPLE PROBLEM OUTPUT

Figure I-D-1 contains the output for BACFIRE II analysis of the sample problem.

JOB TITLE:
JOB DESCRIPTION: COMMON CAUSE FAILURE ANALYSIS FOR EVENT A
SAMPLE PROBLEM FOR BACFIRE II

****

OUTPUT FROM BACFIRE II

****

****
* COMMON CAUSE CANDIDATES *
****

CANDIDATE NUMBER

1 BASIC EVENTS: 1 6

COMMON CONDITION -- FIRST CRITERION
VIRGINIA ENGINEERING CO.

RANK:	MIN	MAX	AVG	SUM
	9	9	9	18

2 BASIC EVENTS: 12 3 1

COMMON CONDITION -- FIRST CRITERION
OPERATOR 1

RANK:	MIN	MAX	AVG	SUM
	3	6	5	15

Figure I-D-1. Sample Problem Output.

JOB TITLE:
JOB DESCRIPTION:

COMMON CAUSE FAILURE ANALYSIS FOR EVENT A
SAMPLE PROBLEM FOR BACFIRE II

3	BASIC EVENTS: 2 1					
	COMMON CONDITION — FIRST CRITERION	RANK:	MIN	MAX	AVG	SUM
	ENERGY SOURCE 2		8	8	8	16
	OPERATOR 1		6	6	6	12
	COMMON SUSCEPTIBILITY — SECOND CRITERION	RANK:	MIN	MAX	AVG	SUM
	IMPACT		4	4	4	8
	STRESS		6	6	6	12
4	BASIC EVENTS: 2 3					
	COMMON CONDITION — FIRST CRITERION	RANK:	MIN	MAX	AVG	SUM
	OPERATOR 1		3	6	4	9
5	BASIC EVENTS: 8 7 1					
	COMMON SUSCEPTIBILITY — SECOND CRITERION	RANK:	MIN	MAX	AVG	SUM
	IMPACT		4	5	4	13

Figure I-D-1. (continued)

****
* QUALITATIVE FAILURE CHARACTERISTICS *
****

IMPACT
DOMAIN= 2IMP

CANDIDATE NUMBER	MINIMUM SENSITIVITY
3	4
5	4

STRESS
DOMAIN= 2IMP

CANDIDATE NUMBER	MINIMUM SENSITIVITY
3	6

OPERATOR 1

CANDIDATE NUMBER	MINIMUM SENSITIVITY
2	3
3	6
4	3

ENERGY SOURCE 2

CANDIDATE NUMBER	MINIMUM SENSITIVITY
3	8

VIRGINIA ENGINEERING CO.

CANDIDATE NUMBER
1

Figure I-D-1. (continued)

****

COMPUTER CONTROL INFORMATION

****

LOGICAL UNIT FOR TOP EVENT CUT SETS - - - - - - - - - - 25
LOGICAL UNIT FOR DUMC CUT SETS - - - - - - - - - - 13
LOGICAL UNIT FOR DUML CUT SETS - - - - - - - - - - 14
LOGICAL UNIT FOR DUMJ CUT SETS - - - - - - - - - - 15
LOGICAL UNIT FOR COMMON CAUSE CANDIDATES - - - - - - - - 7

THIS CONCLUDES THE OUTPUT FROM BACFIRE.

Figure I-D-1. (continued)

APPENDIX II

CRBRP SHUTDOWN HEAT REMOVAL SYSTEM LOGIC MODELS

The CRBRP SHRS logic models were developed in the fault tree format. A fault tree is a graphical representation of the failure logic of a system associated with a particular TOP event.

Basic event descriptions and component names in the CRBRP SHRS logic models are represented by an eight character identification code. The format of the code is shown in Figure II-1. The code may be deciphered by referring to Tables II-1 through II-4.

The logic models for the CRBRP SHRS are presented in Figures II-2 through II-4.

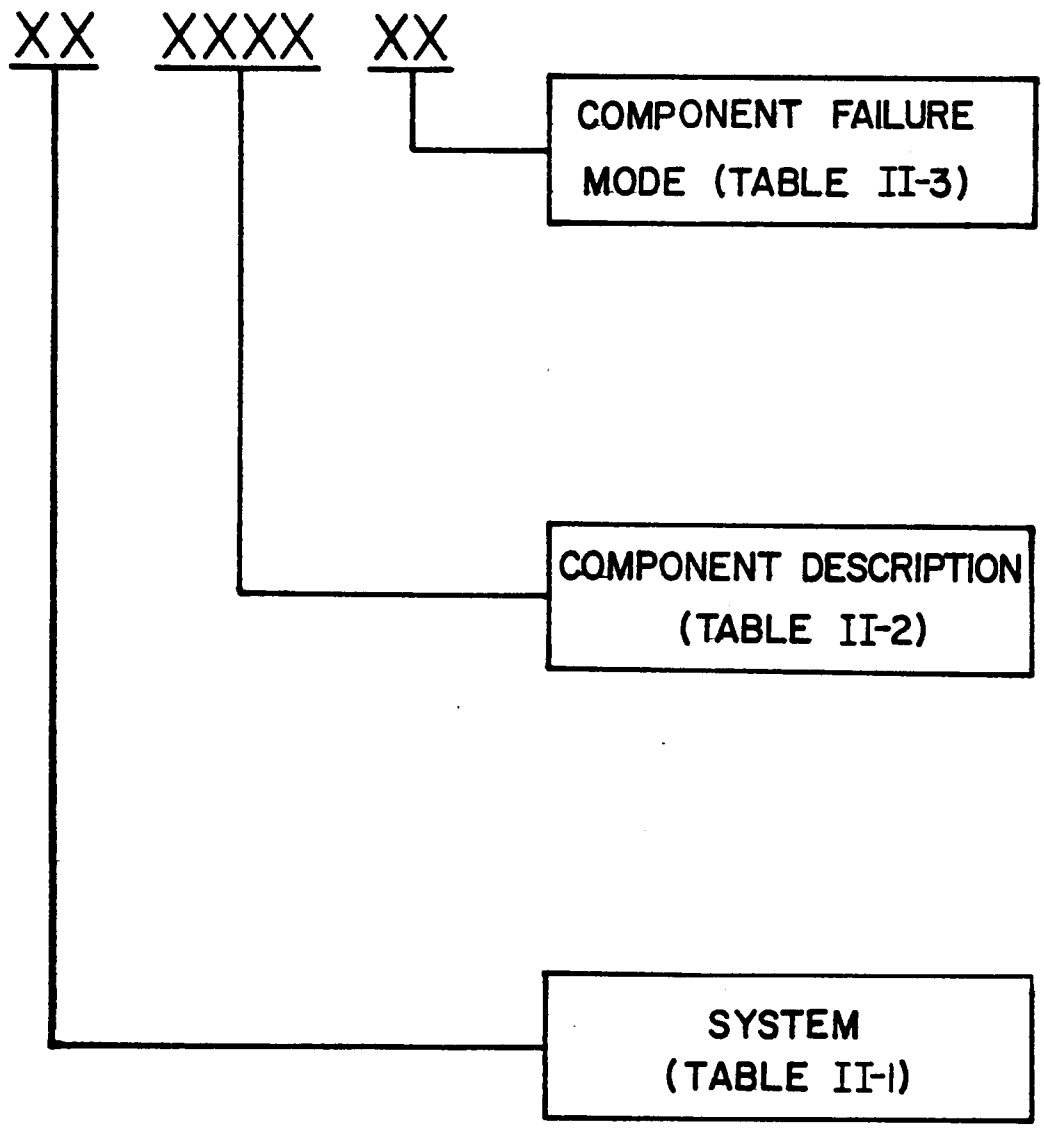

Figure II-1. Identification Code Format.

TABLE II-1

SYSTEM IDENTIFICATION CODES

Code	Description
AF	Auxiliary Feedwater System
DH	Direct Heat Removal System
Iθ	Intermediate Heat Transport Loop
Pθ	Primary Heat Transport Loop
PS	Primary Heat Transport System
Sθ	Steam Generator Auxiliary Heat Removal System

TABLE II-2

COMPONENT DESCRIPTION CODES

Code	Description
A1IV	Airblast Heat Exchanger 1 Inlet Valve
A2IV	Airblast Heat Exchanger 2 Inlet Valve
A1LV	Airblast Heat Exchanger 1 Loop Valve
A2LV	Airblast Heat Exchanger 2 Loop Valve
A1OV	Airblast Heat Exchanger 1 Outlet Valve
A2OV	Airblast Heat Exchanger 2 Outlet Valve
AHPC	Piping Common To Both Airblast Heat Exchangers
AHX1	Airblast Heat Exchanger 1
AHX2	Airblast Heat Exchanger 2
AH1P	Airblast Heat Exchanger 1 Piping
AH2P	Airblast Heat Exchanger 2 Piping
CKVL	Check Valve
CSTT	Condensate Storage Tank
CSVA	Condensate Storage Tank Valve A
CSVB	Condensate Storage Tank Valve B
CSVC	Condensate Storage Tank Valve C
CTSV	Cold Trap System Valves
DRUM	Steam Drum
DVEV	Steam Drum Vent Valve
DWVL	Recirculation Pump Inlet Valve
EAIV	Evaporator A Inlet Valve
EBIV	Evaporator B Inlet Valve
EVAT	Evaporator A Tubes
EVBT	Evaporator B Tubes
EVPA	Evaporator A
EVPB	Evaporator B
FWPA	Feedwater Pump A
FWPB	Feedwater Pump B
FWPC	Feedwater Pump C
IHXT	Intermediate Heat Exchanger Tubes
MUP1	Sodium Makeup Pump 1
MUP2	Sodium Makup Pump 2
NKP1	Nak Pump 1
NKP2	Nak Pump 2
OFVS	Sodium Overflow Vessel
OHBV	Overflow Heat Exchanger Bypass Valves
OHIV	Overflow Heat Exchanger Inlet Valve
OHXT	Overflow Heat Exchanger Tubes

TABLE II-2 (continued)

Code	Description
POMO	Pony Motor
PPMM	Primary Pump Main Motor
PRPE	Primary Piping
PWST	Protected Water Storage Tank
PWVA	Protected Water Storage Tank Valve A
PWVB	Protected Water Storage Tank Valve B
PWVB	Protected Water Storage Tank Valve C
RGVS	Reactor Guard Vessel
RXVS	Reactor Vessel
SHXI	Superheater Inlet Valve
SHXT	Superheater Tubes
SPHS	Superheater Shell
SPHX	Superheater
SVEV	Superheater Vent Valve
TURB	Turbine
VLΘA	Auxiliary Feedwater Valve Θ-A
VLΘA	Auxiliary Feedwater Valve Θ-B

TABLE II-3

FAILURE MODE CODES

Code	Description
BL	Blocked
FC	Fails Closed
FL	Fouled
FO	Fails Off
FP	Fails Open
LK	Leaks
NA	Not Available
NC	Not Closed
NS	No Steam
NR	Sodium Water Reaction
RO	Remains On
RU	Rupture
TC	Transfers Closed
TO	Transfers Open

TABLE II-4

ABBREVIATIONS USED IN EVENT DESCRIPTION

Abbreviation	Description
ABHX	Airblast Heat Exchanger
FCC	Forced Convection Cooling
INTER	Intermediate
LTA	Less Than Adequte
NA	Sodium
OHX	Overflow Heat Exchanger
PRI	Primary
TRAN	Transfer

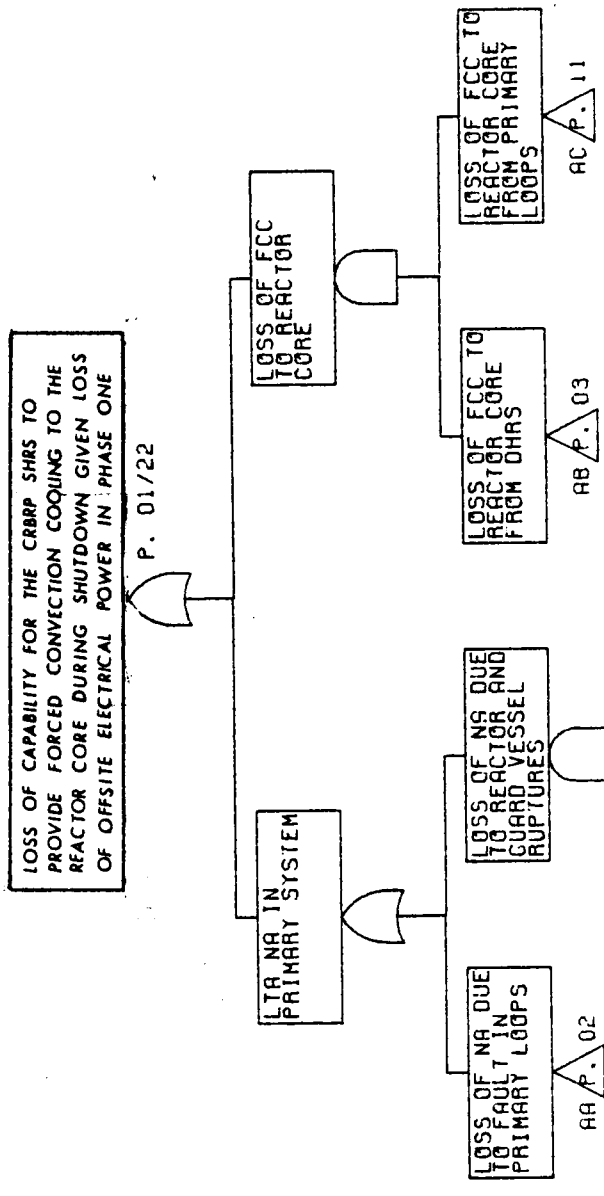

Figure II-2. CRBRP SHRS Phase One Logic Model.

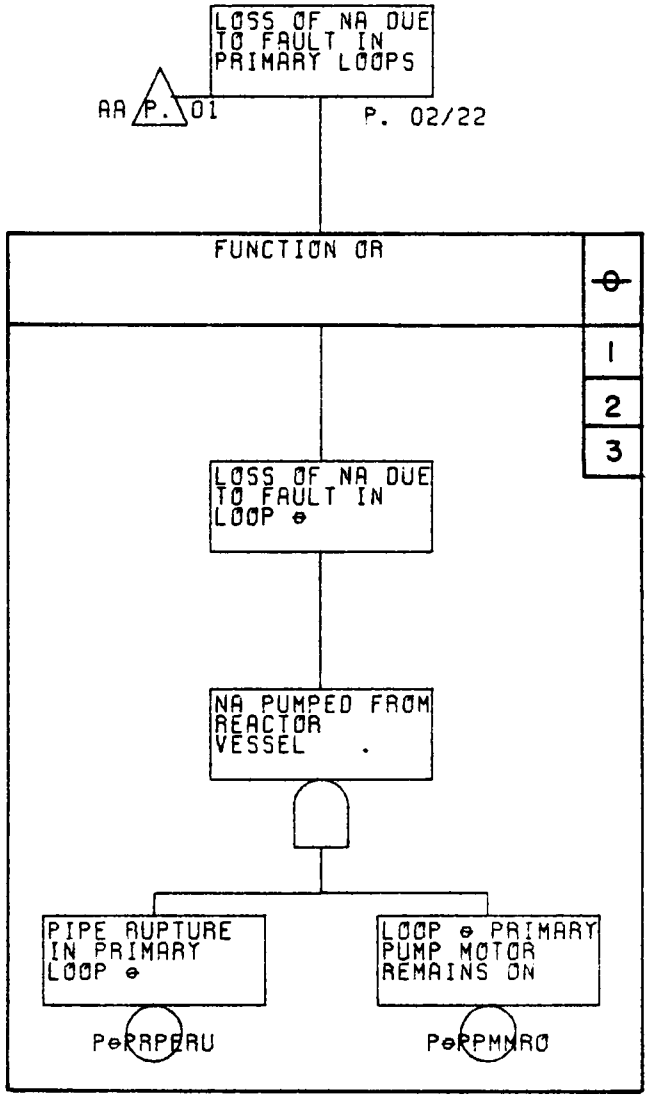

Figure II-2. (continued)

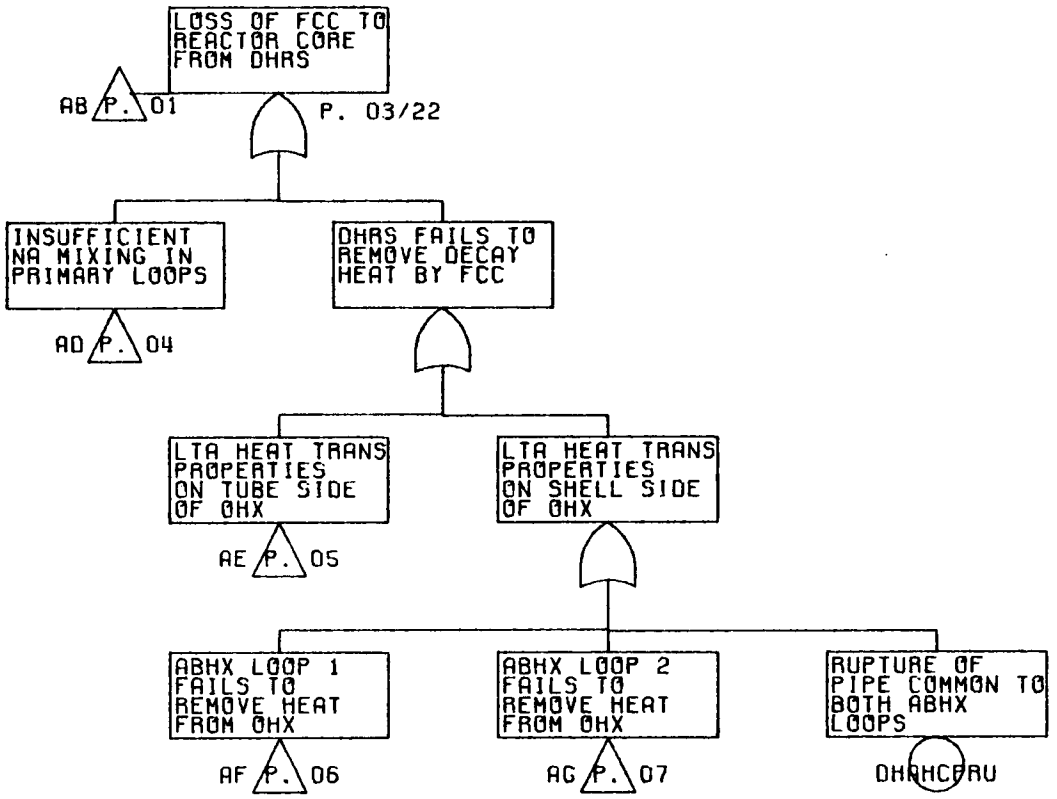

Figure II-2. (continued)

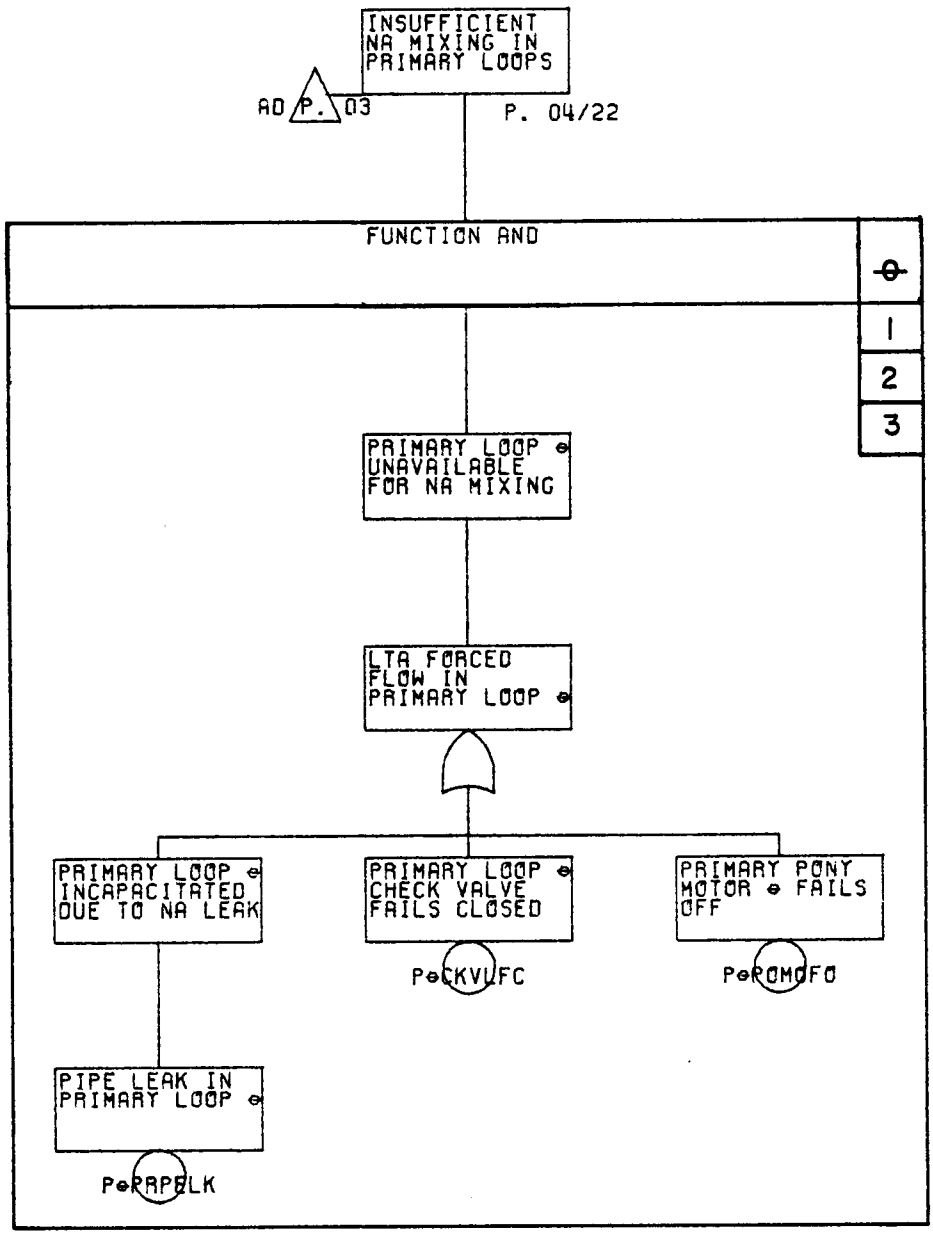

Figure II-2. (continued)

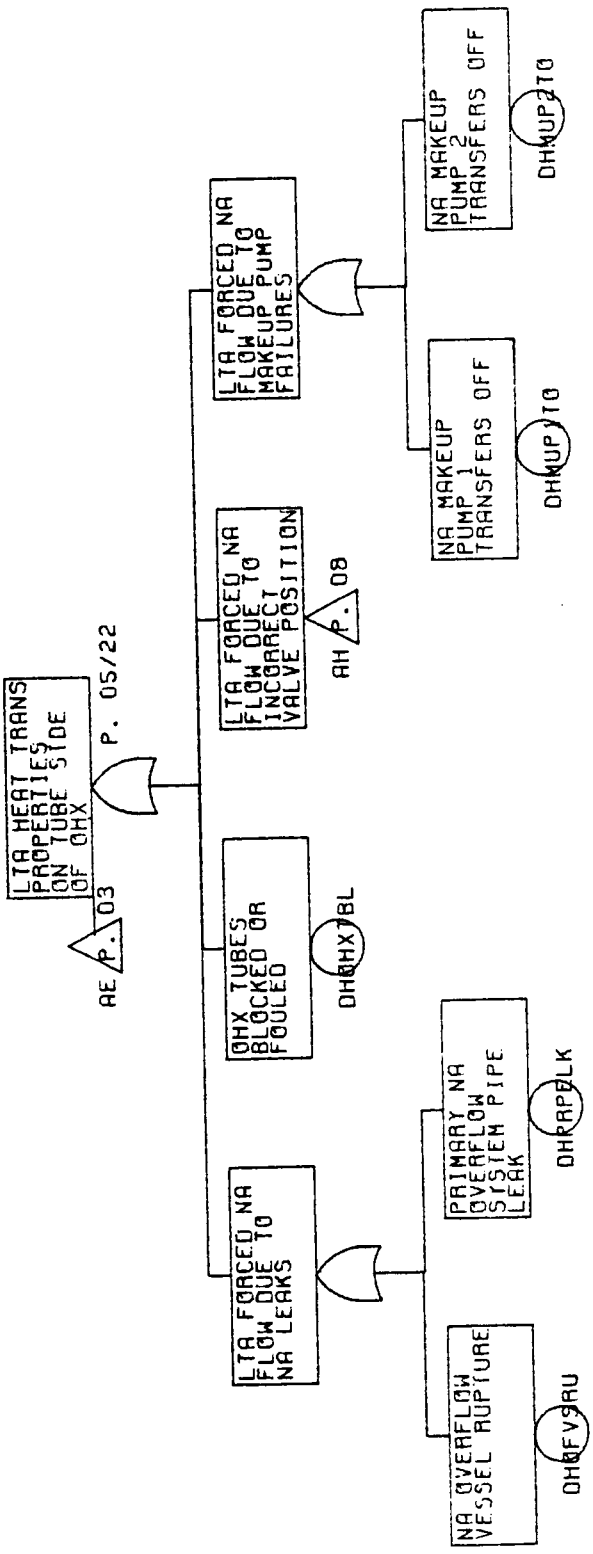

Figure II-2. (continued)

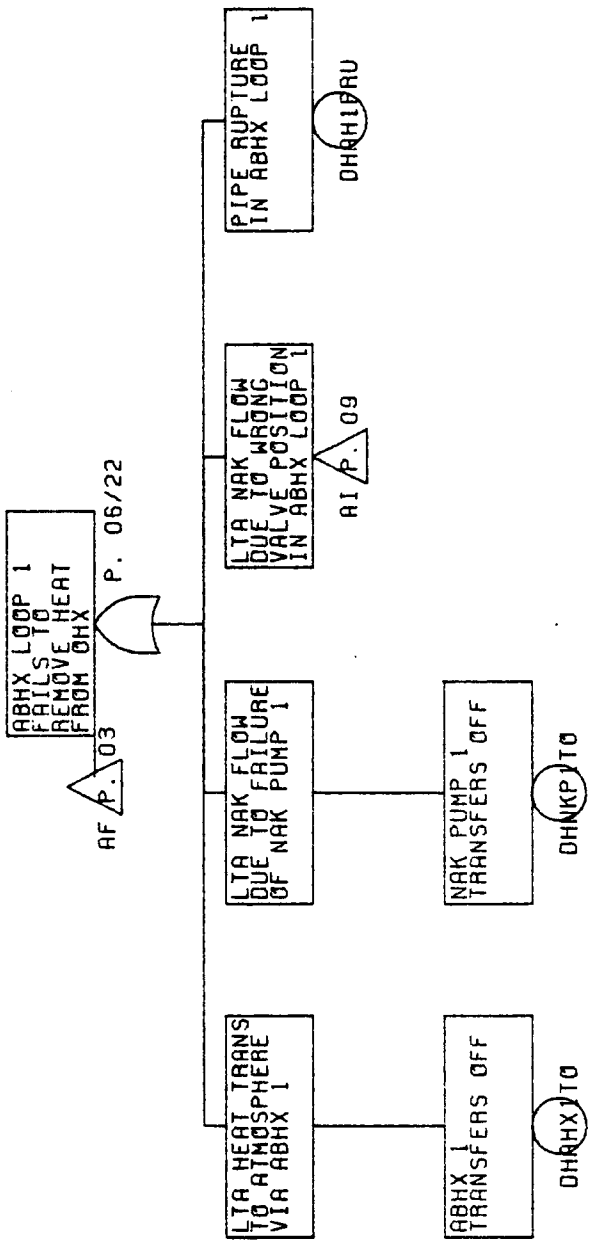

Figure II-2. (continued)

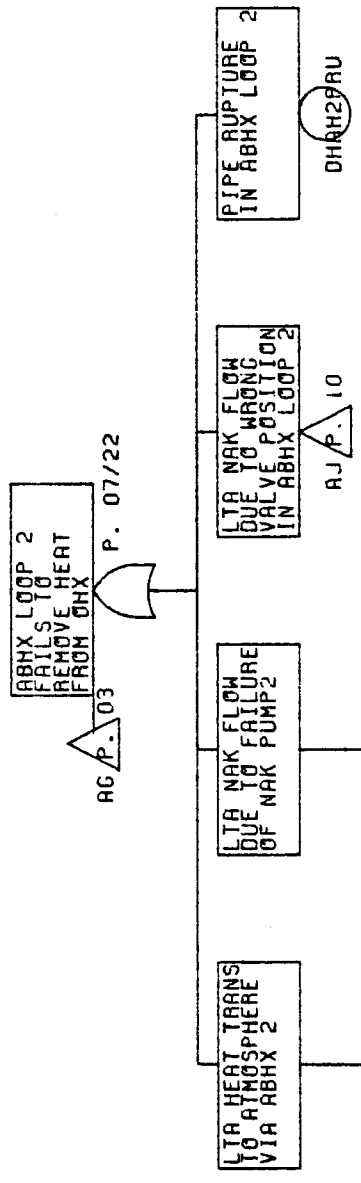

Figure II-2. (continued)

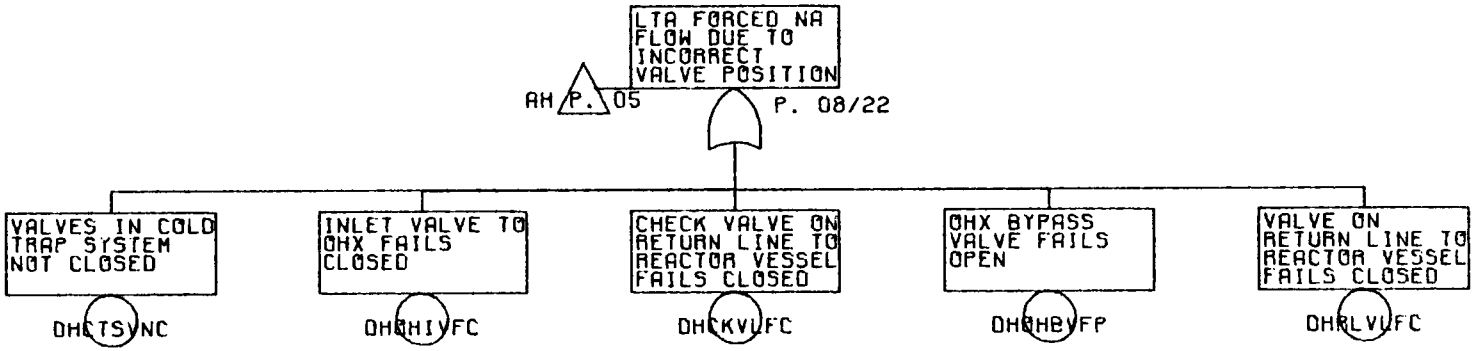

Figure II-2. (continued)

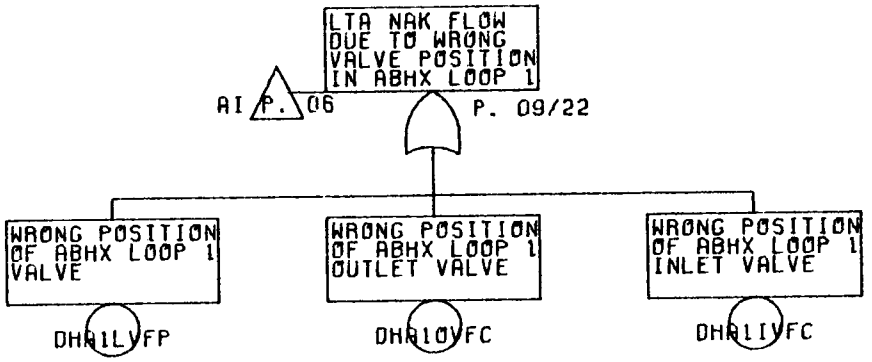

Figure II-2. (continued)

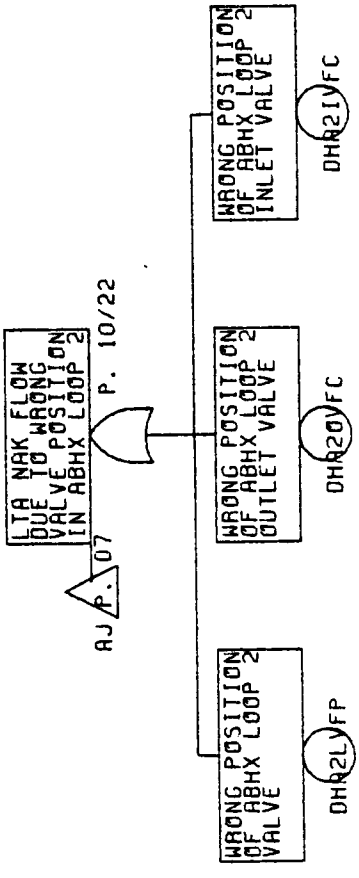

Figure II-2. (continued)

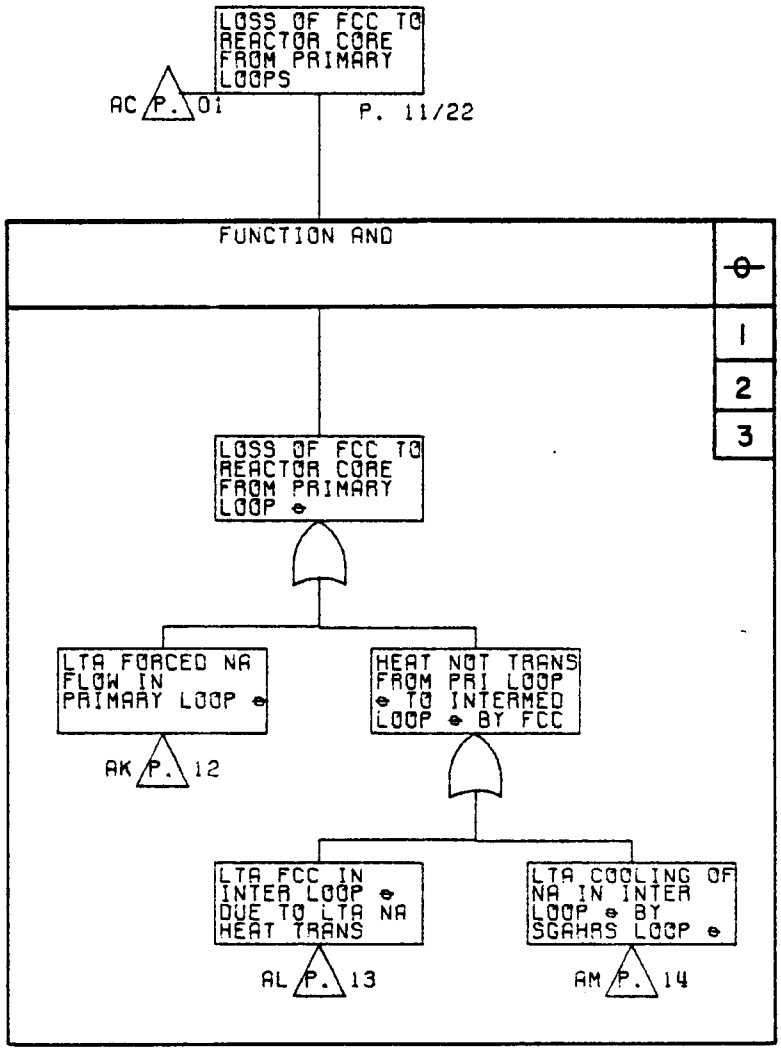

Figure II-2. (continued)

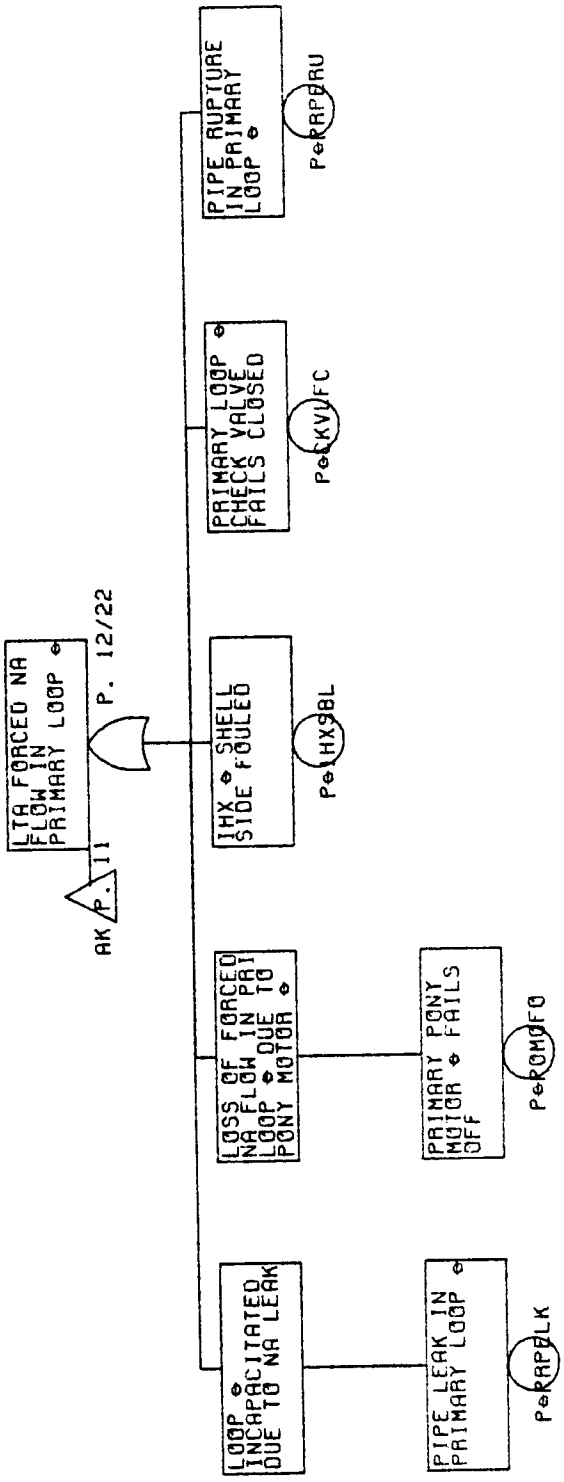

Figure II-2. (continued)

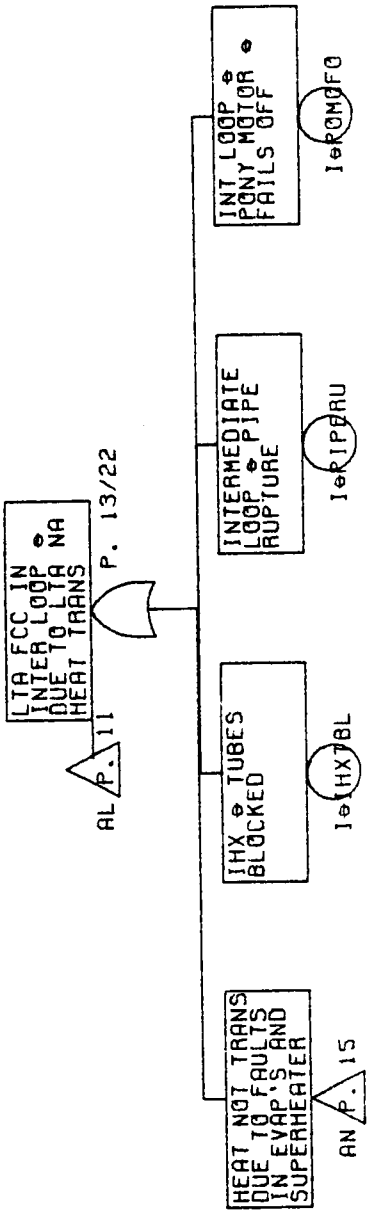

Figure II-2. (continued)

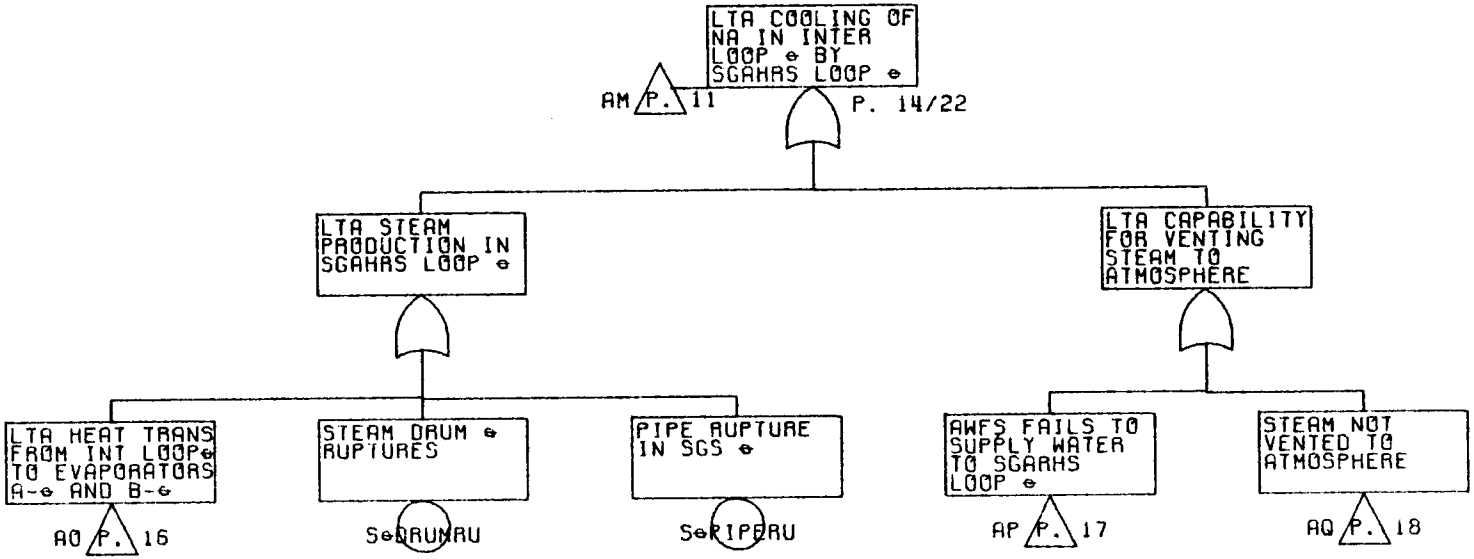

Figure II-2. (continued)

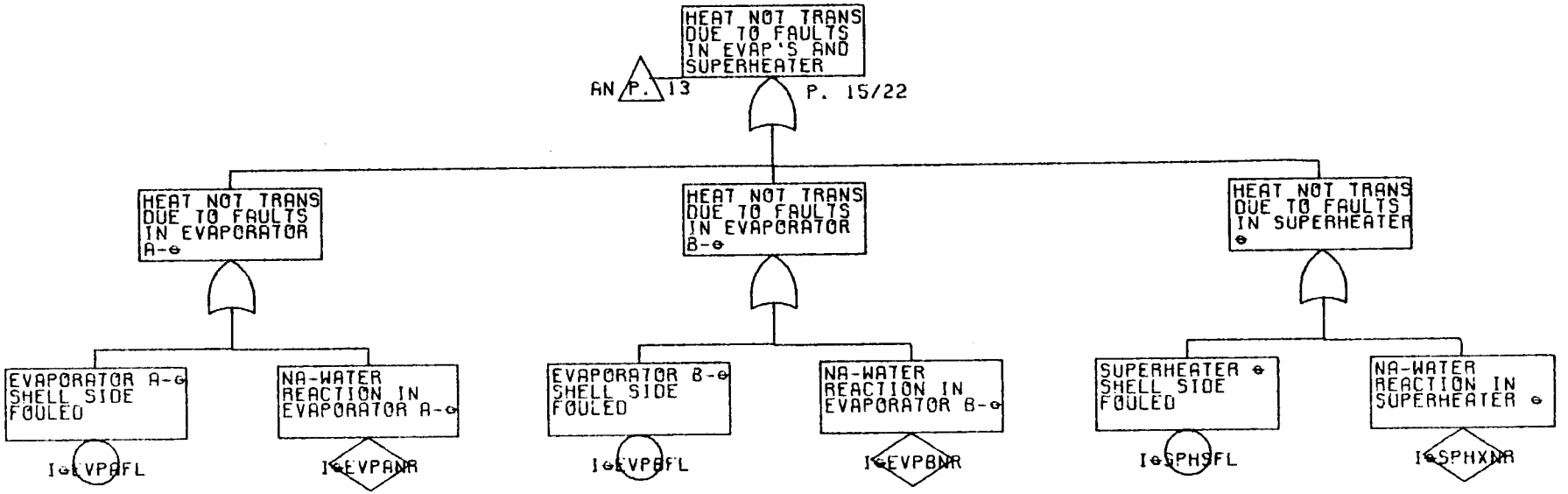

Figure II-2. (continued)

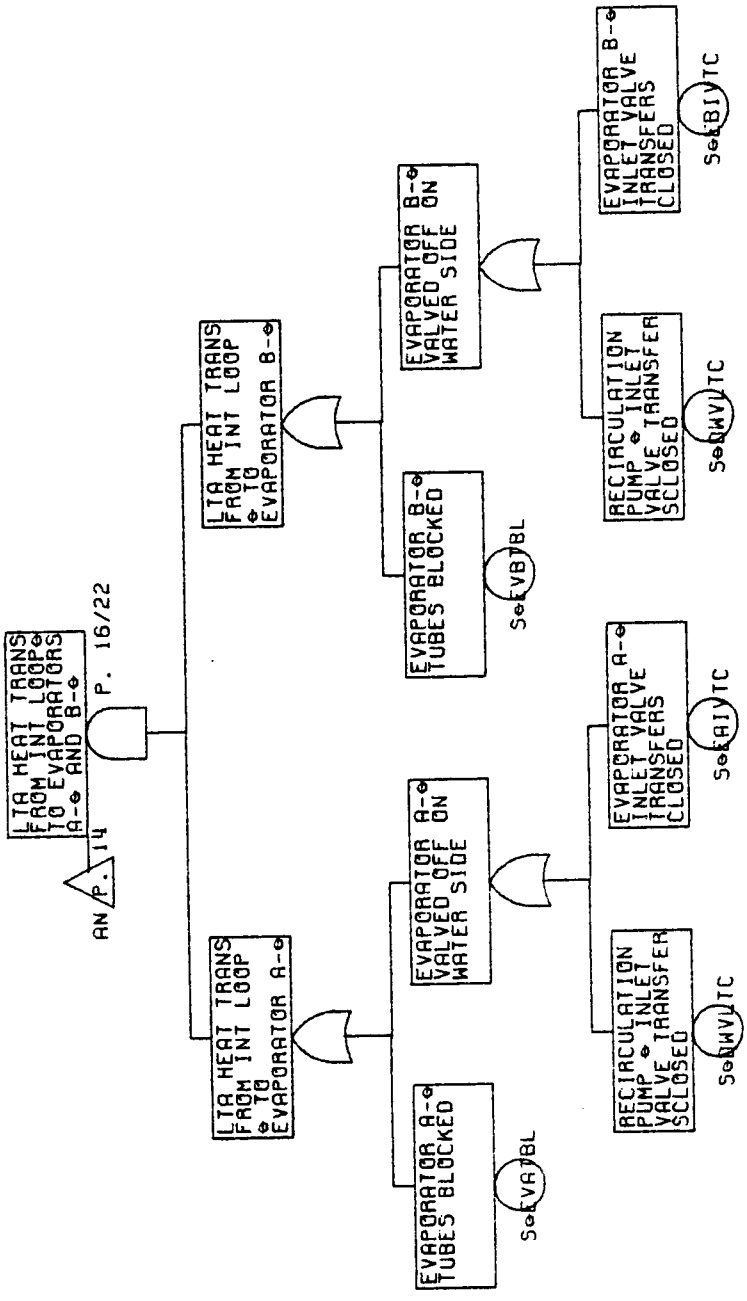

Figure II-2. (continued)

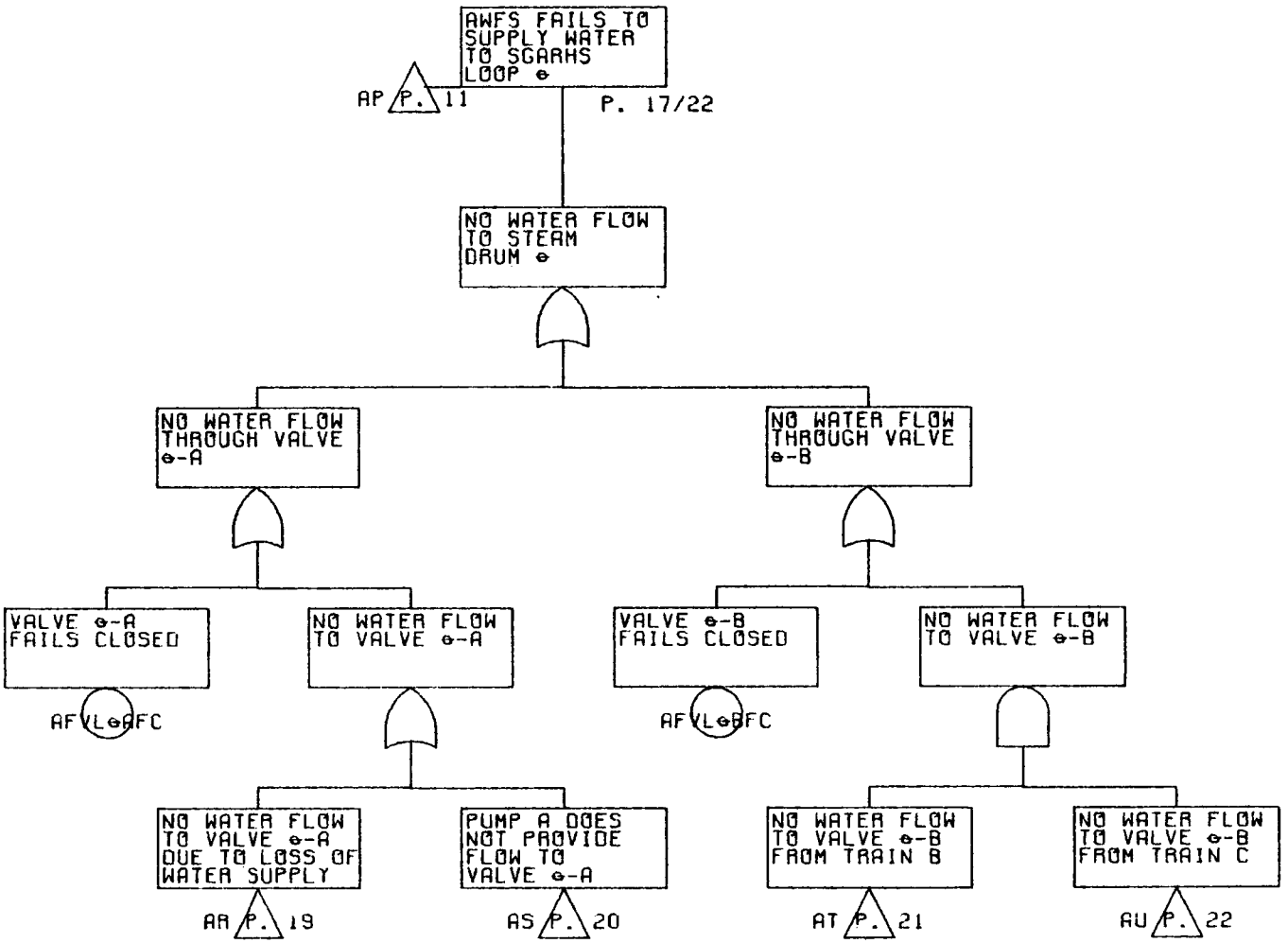

Figure II-2. (continued)

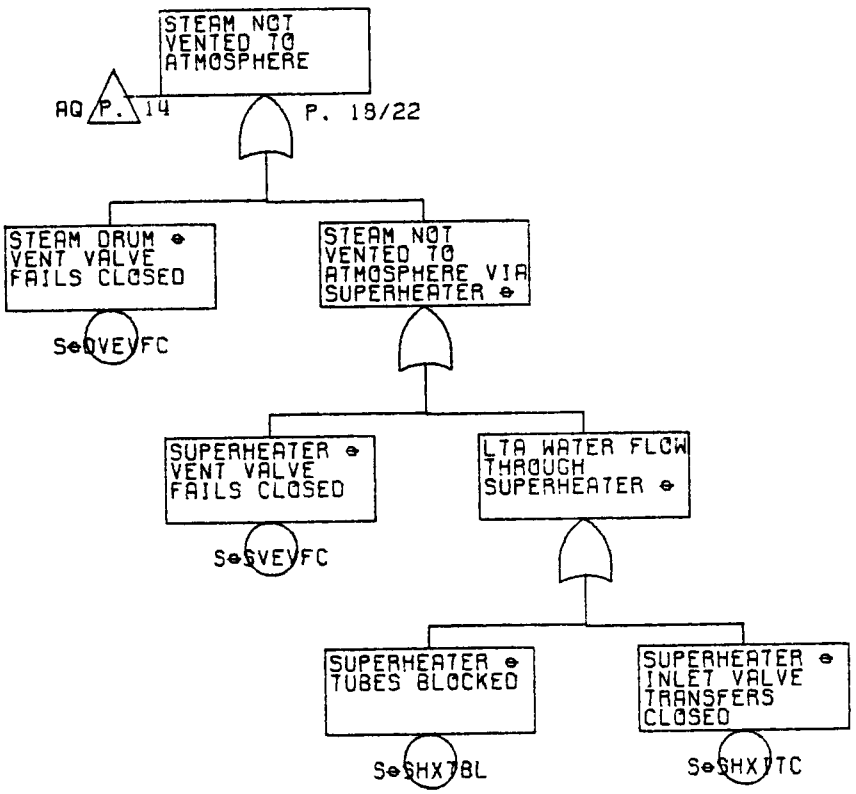

Figure II-2. (continued)

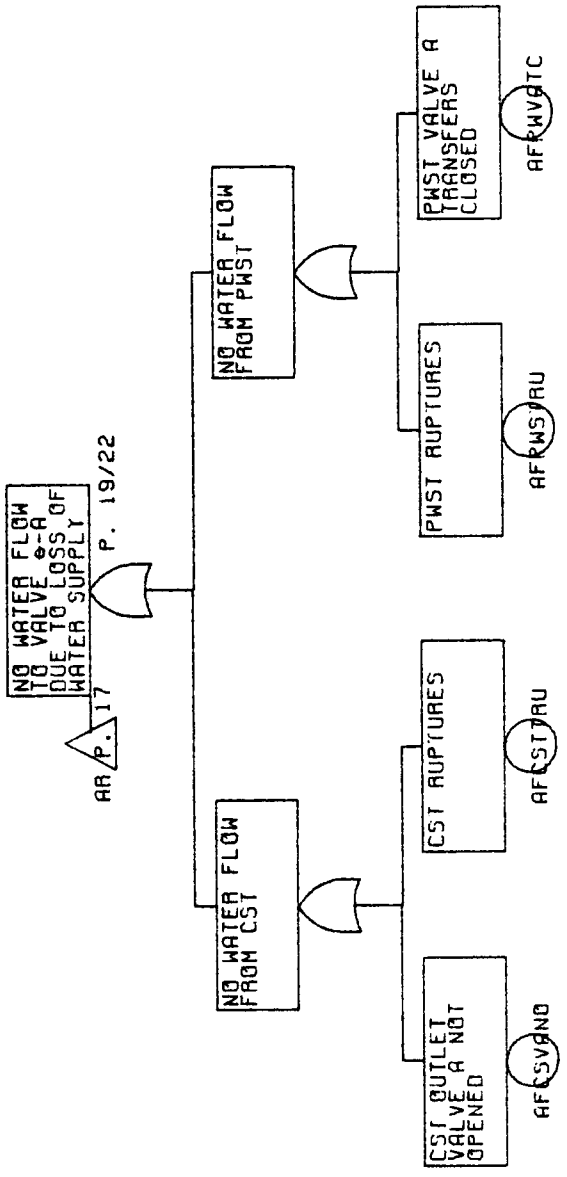

Figure II-2. (continued)

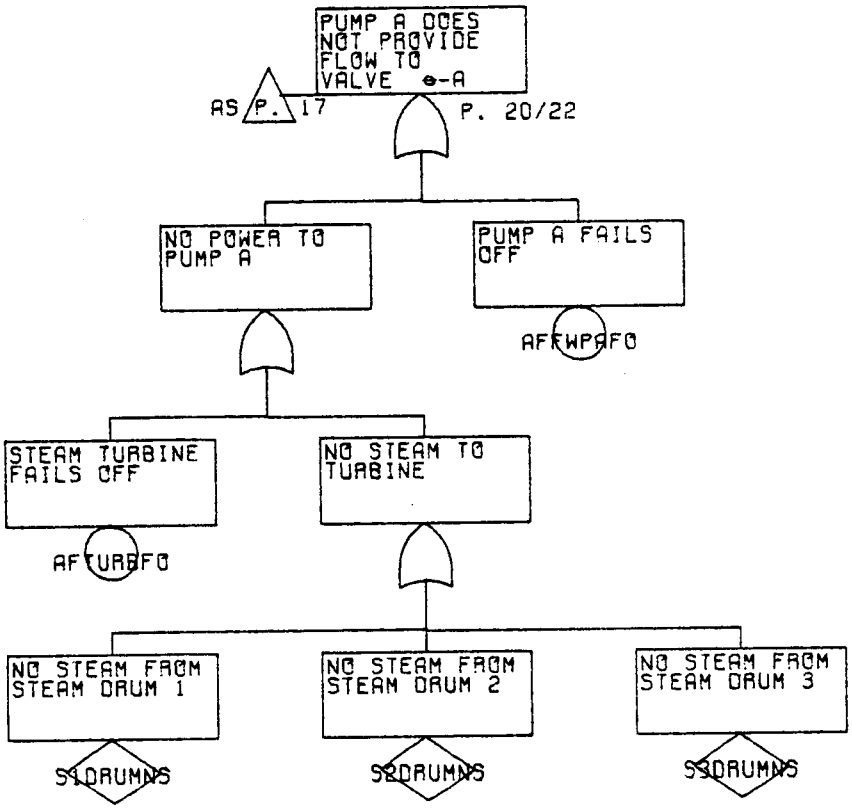

Figure II-2. (continued)

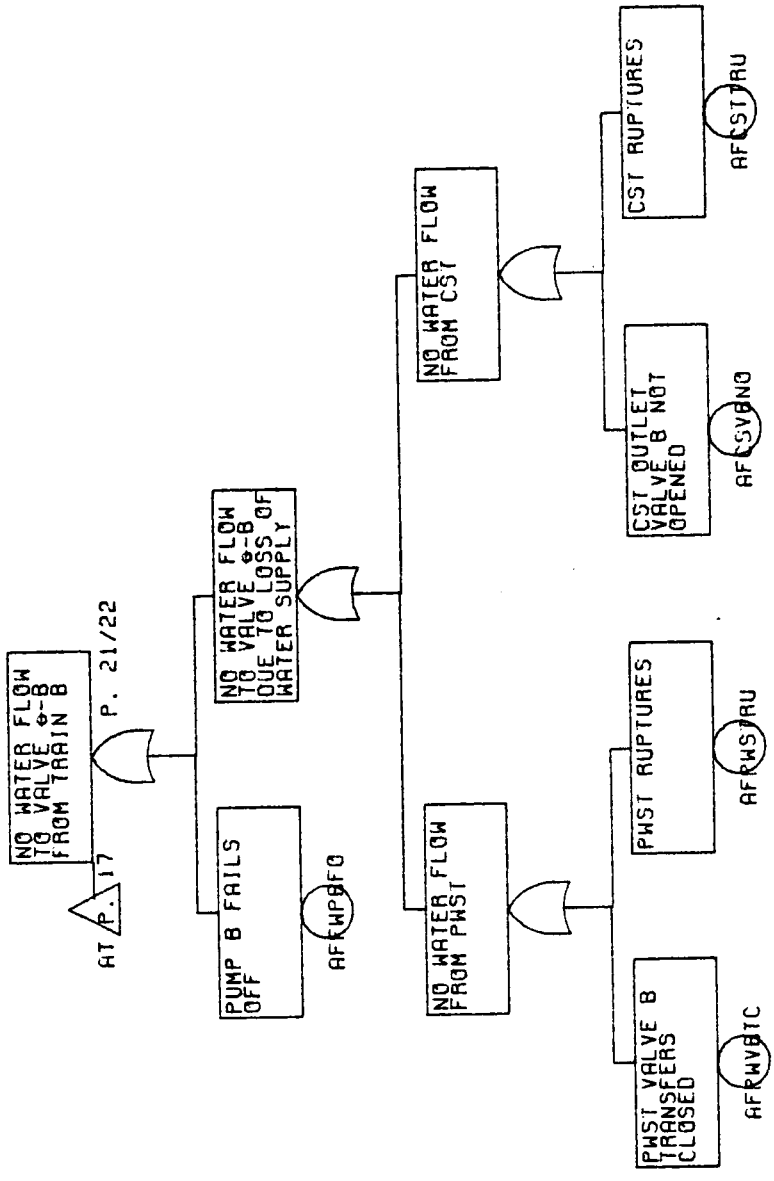

Figure II-2. (continued)

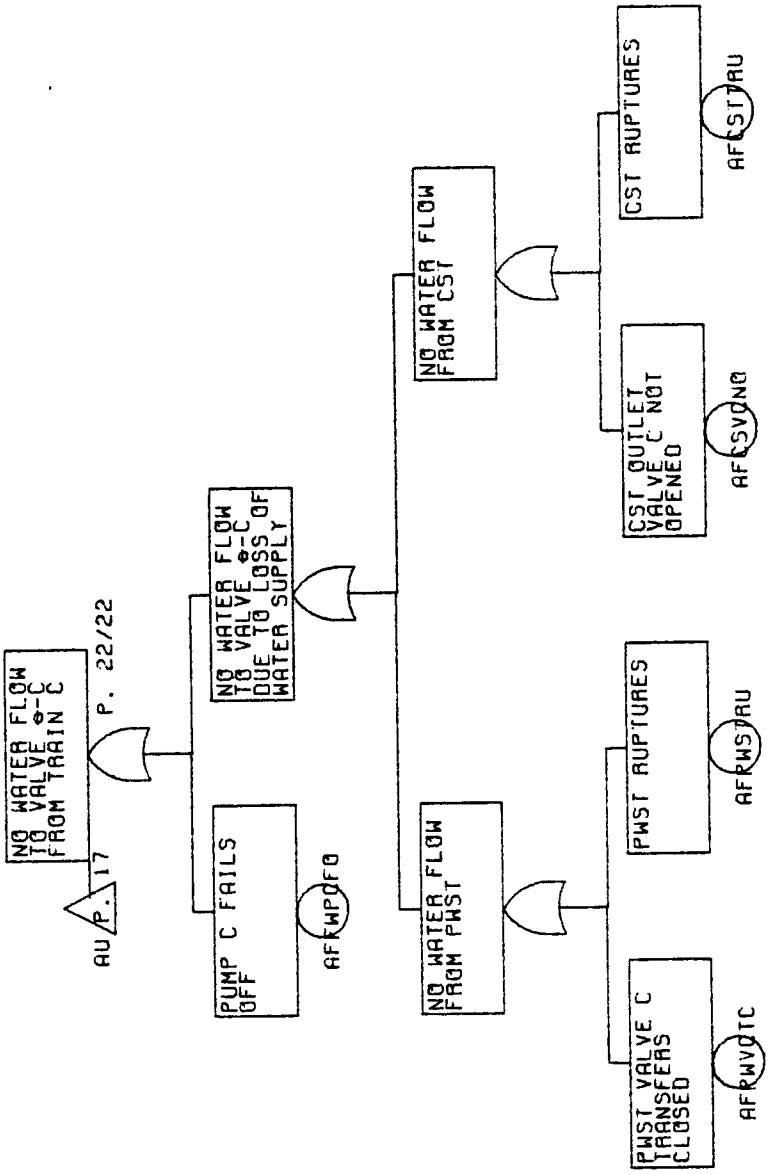

Figure II-2. (continued)

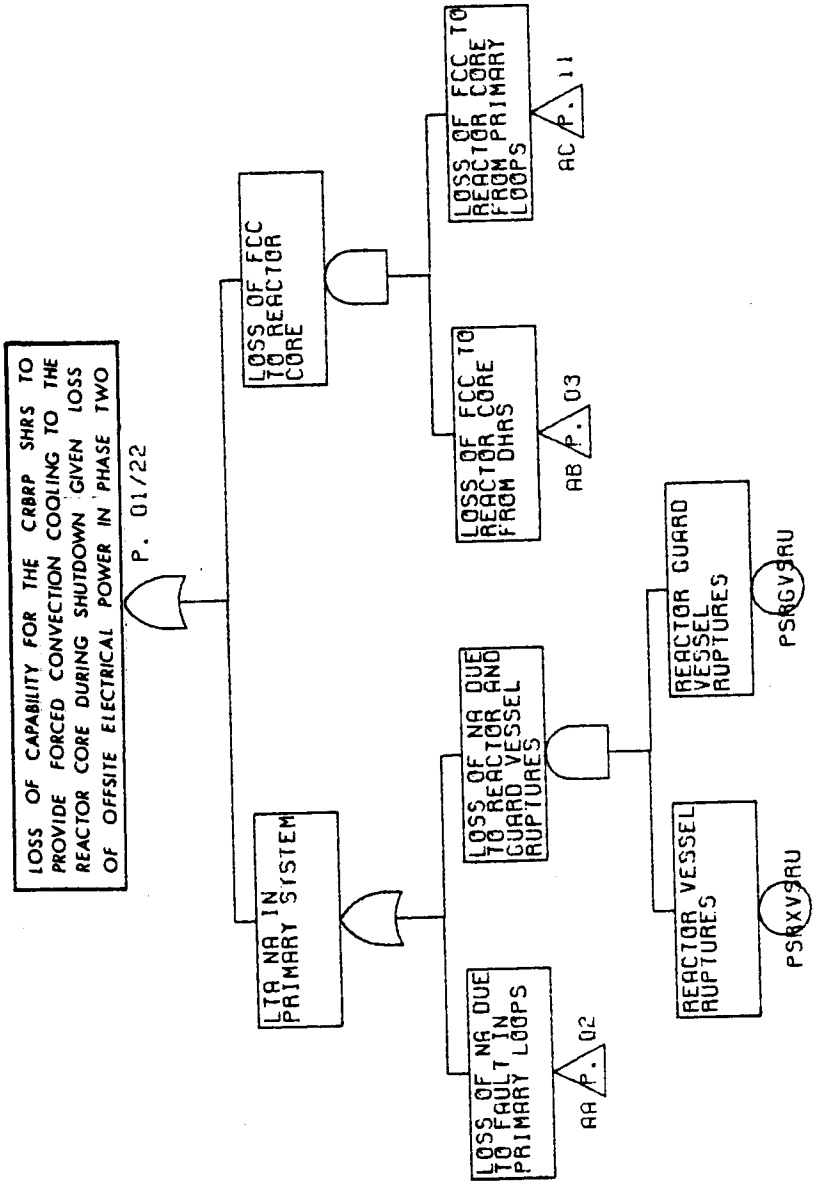

Figure II-3. CRBRP SHRS Phase Two Logic Model.

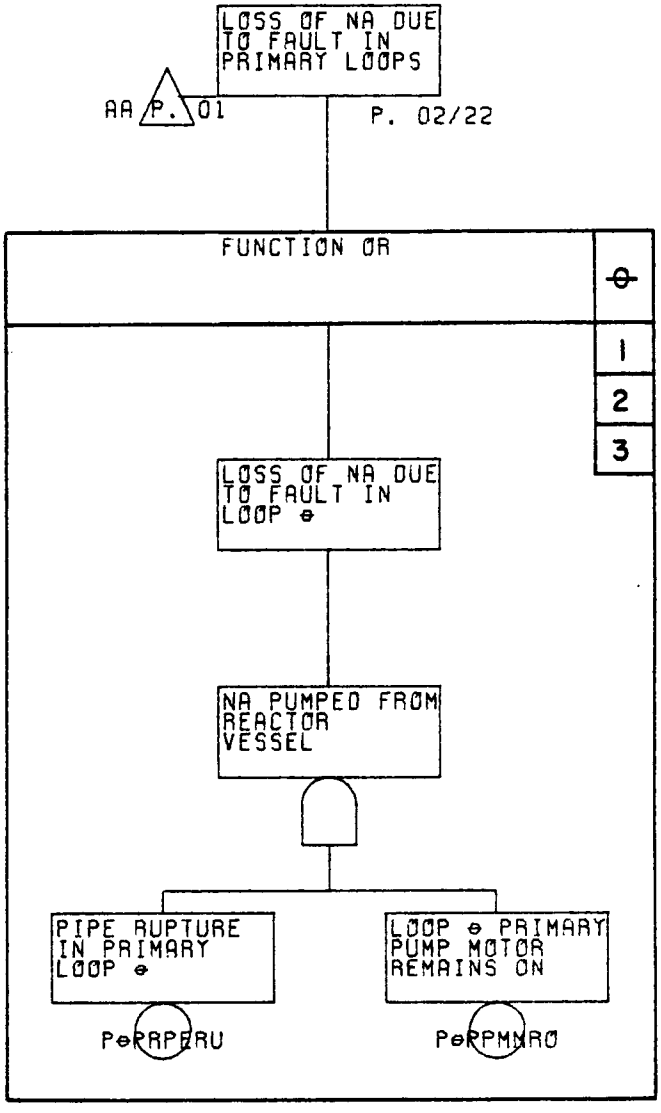

Figure II-3. (continued)

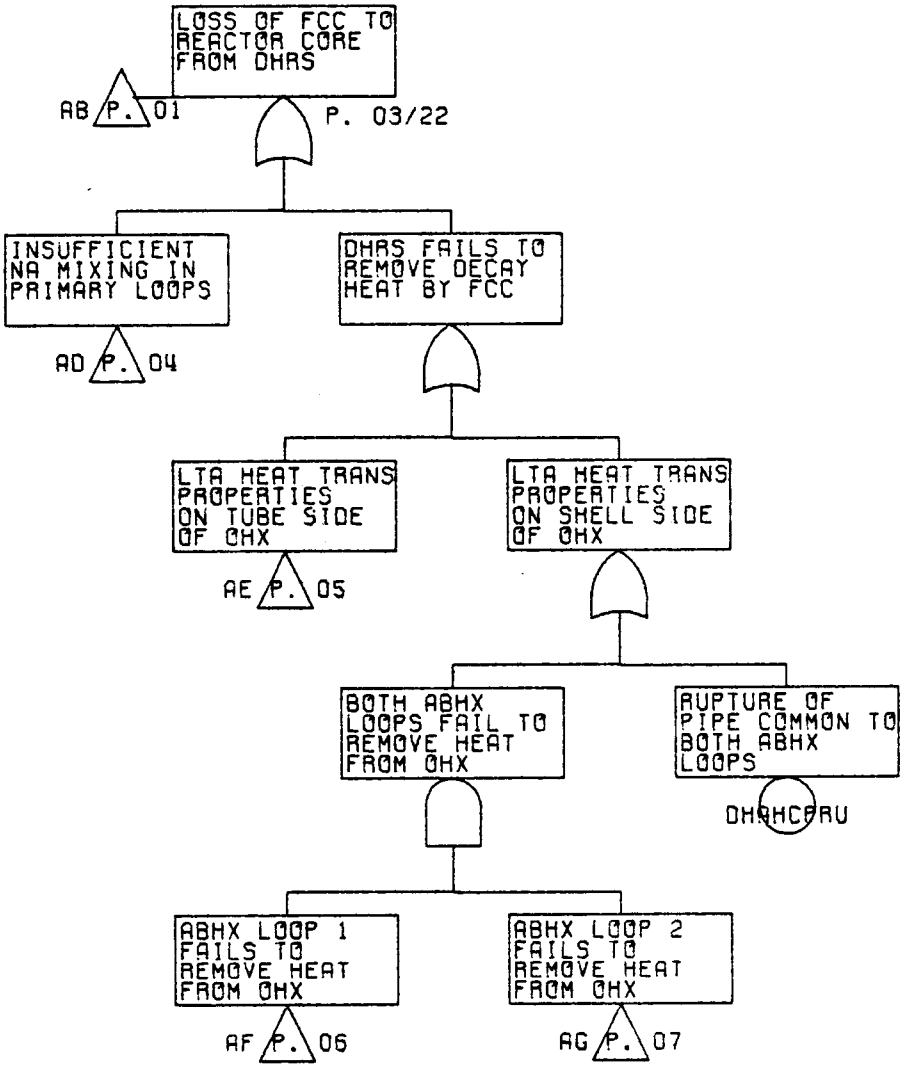

Figure II-3. (continued)

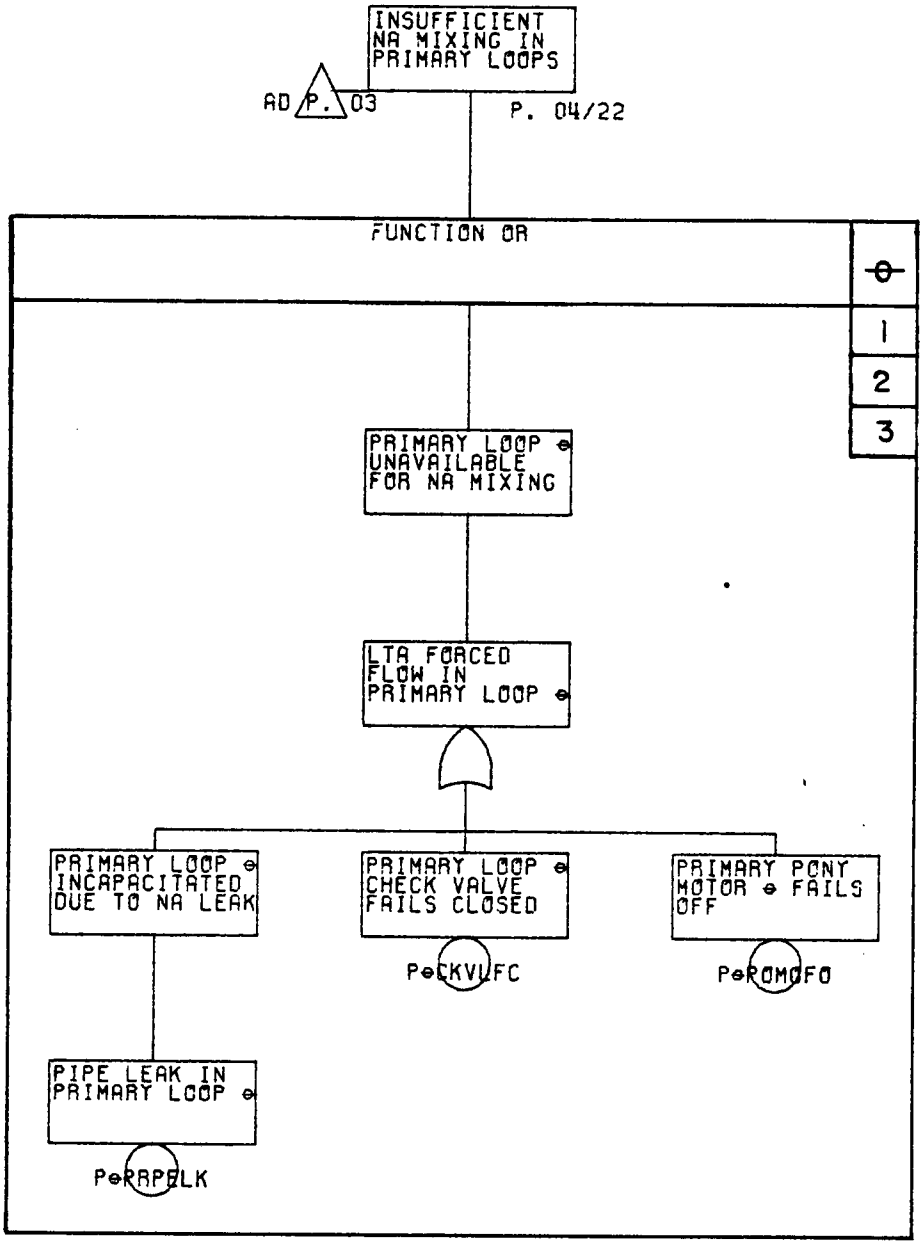

Figure II-3. (continued)

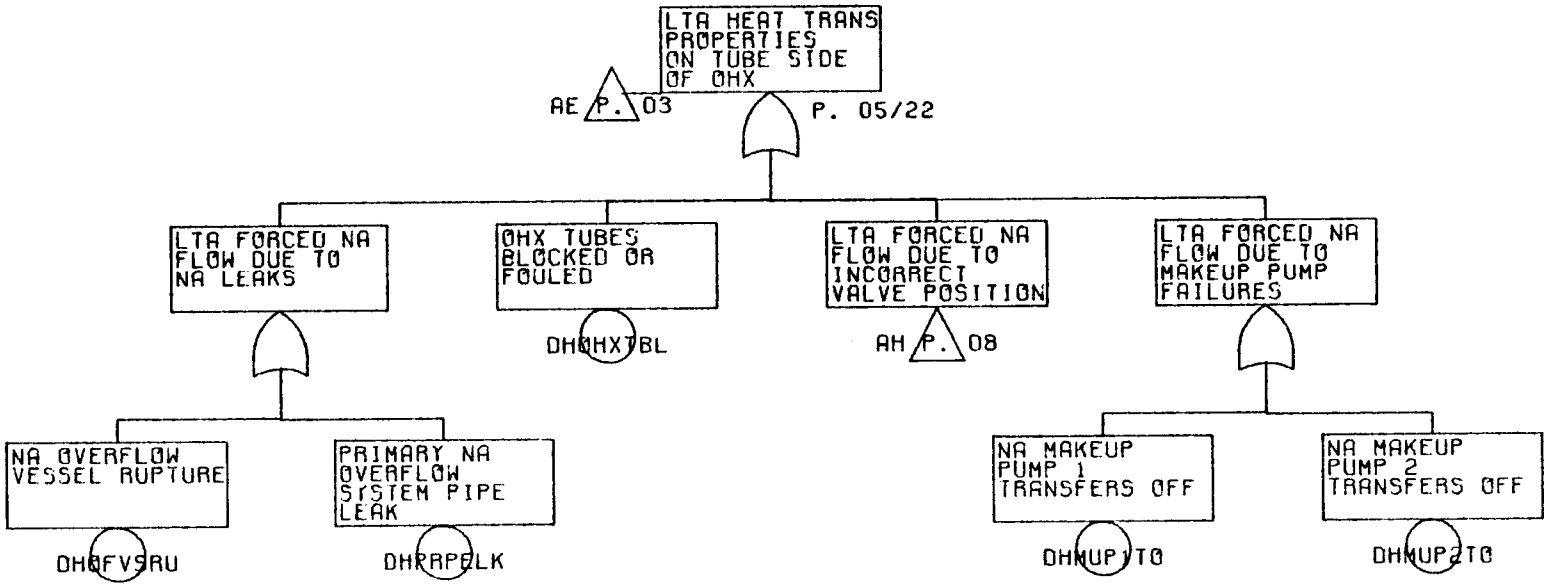

Figure II-3. (continued)

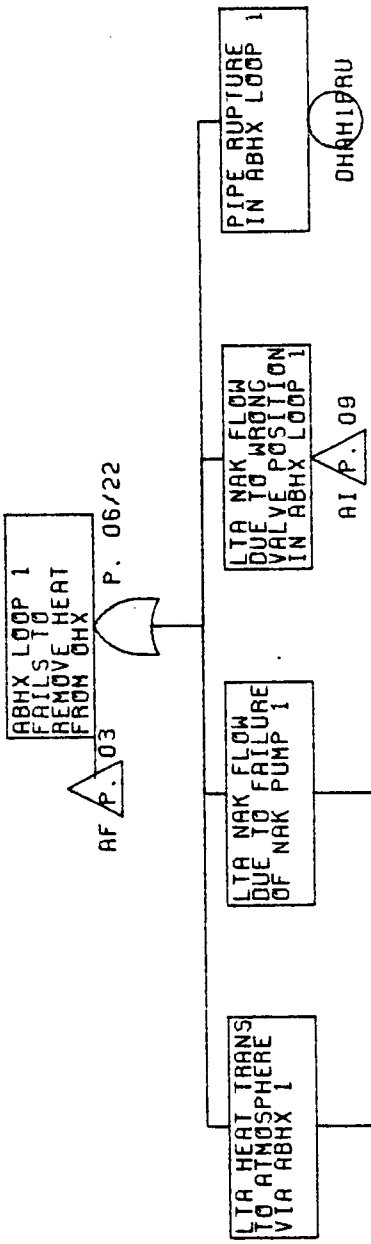

Figure II-3. (continued)

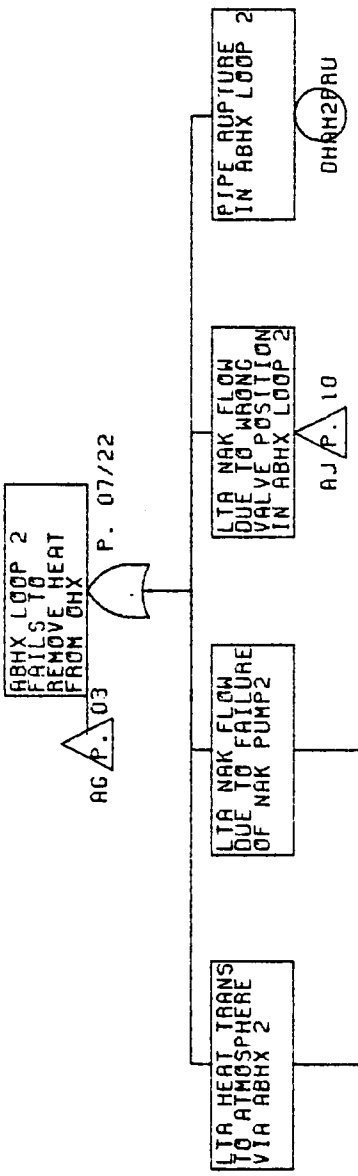

Figure II-3. (continued)

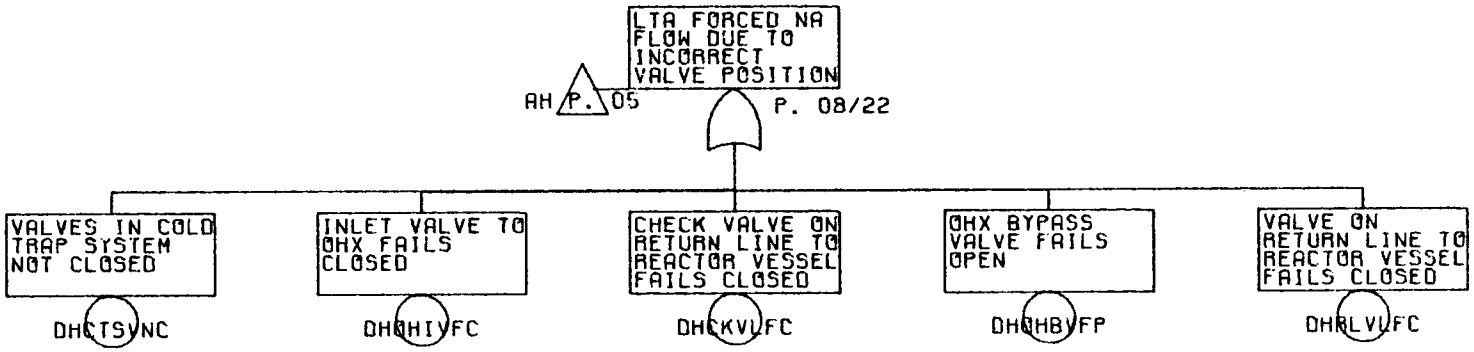

Figure II-3. (continued)

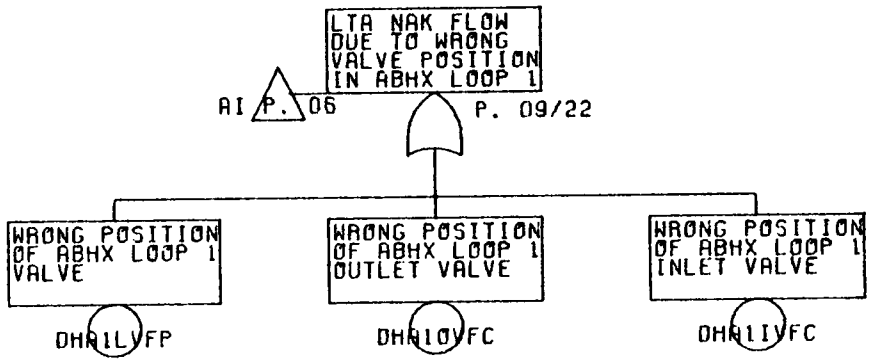

Figure II-3. (continued)

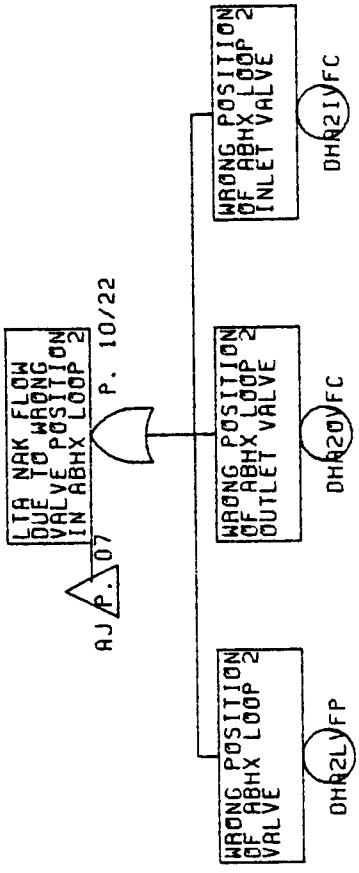

Figure II-3. (continued)

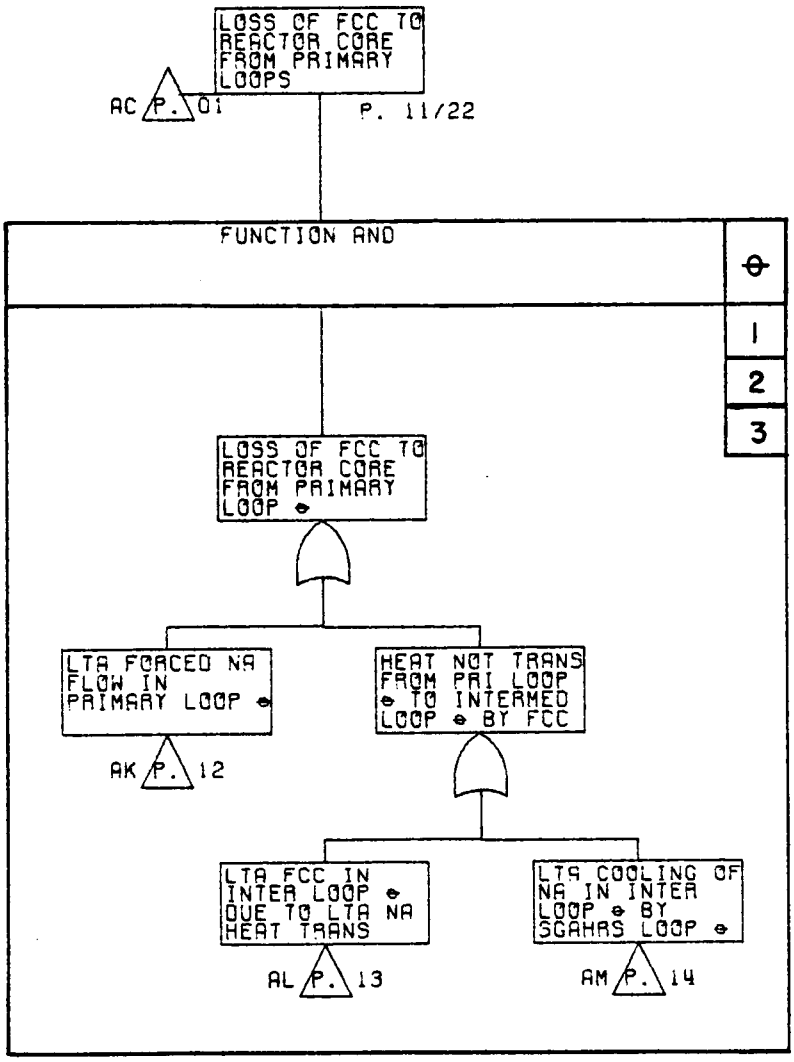

Figure II-3. (continued)

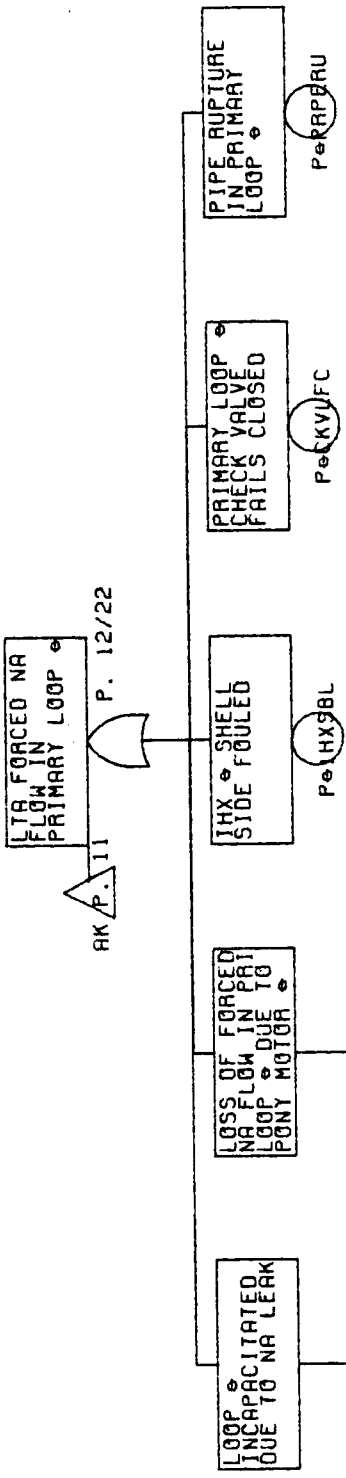

Figure II-3. (continued)

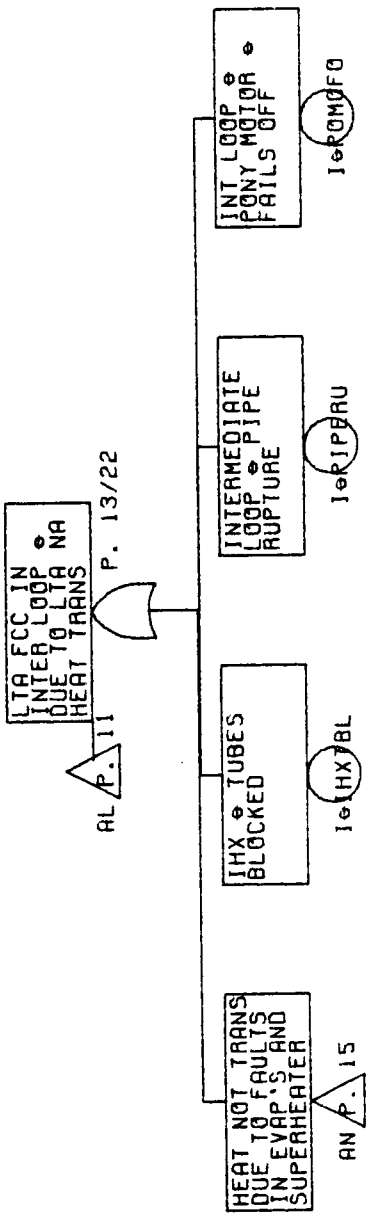

Figure II-3. (continued)

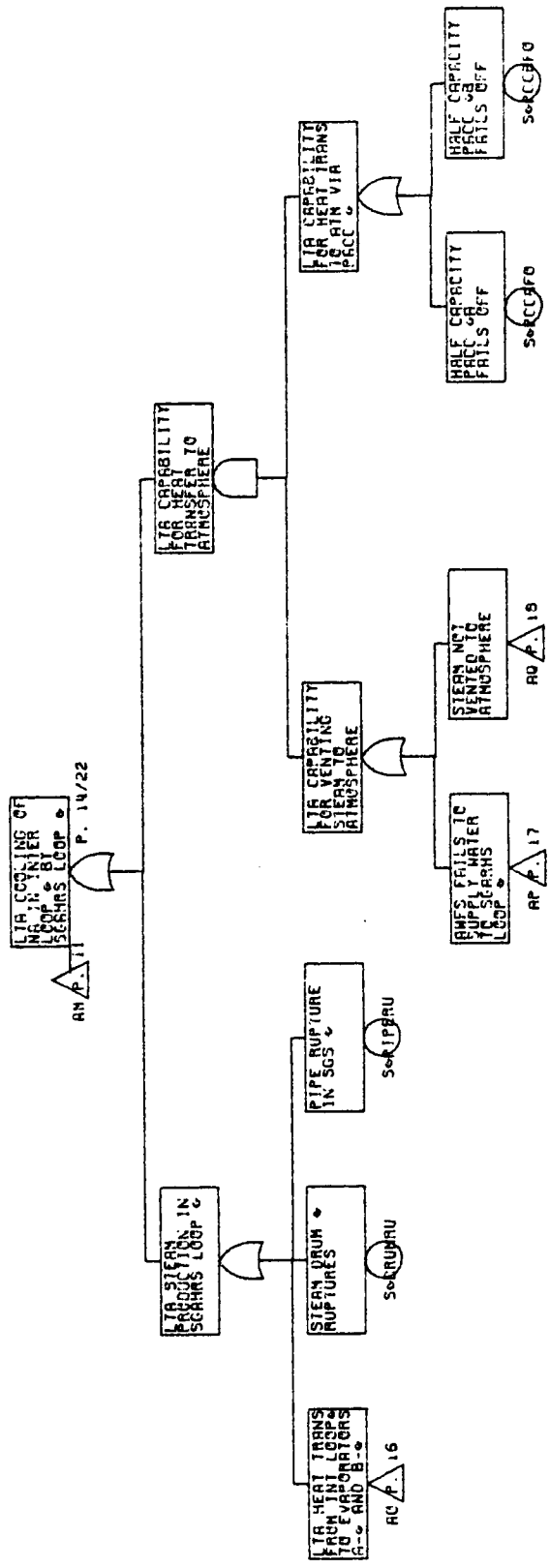

Figure II-3. (continued)

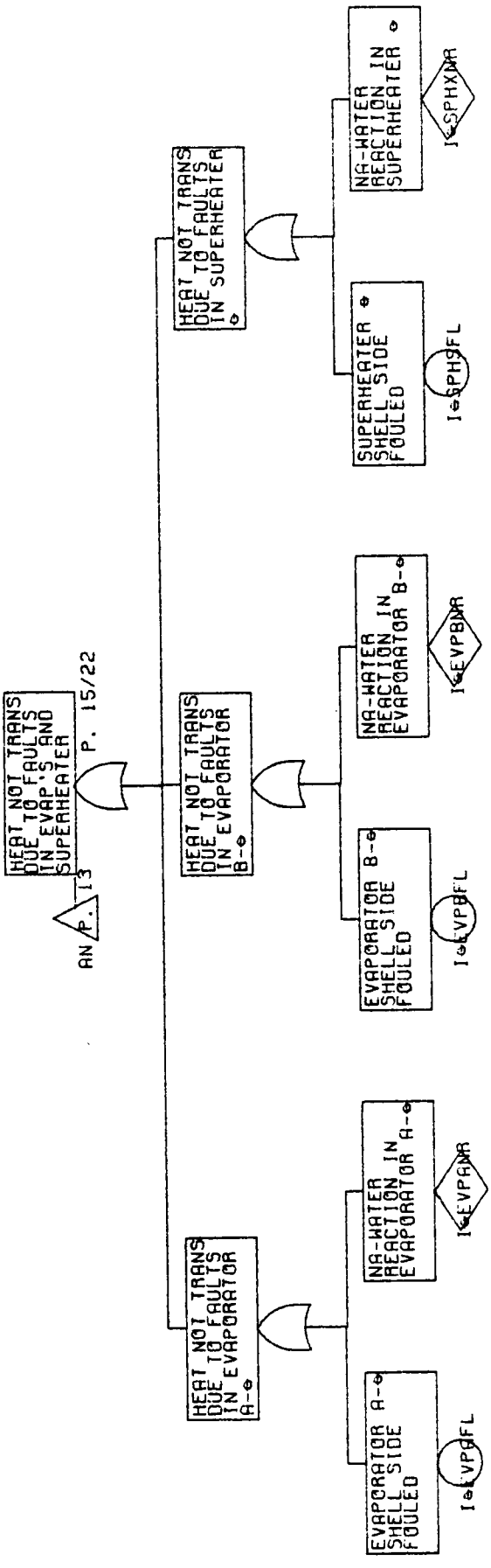

Figure II-3. (continued)

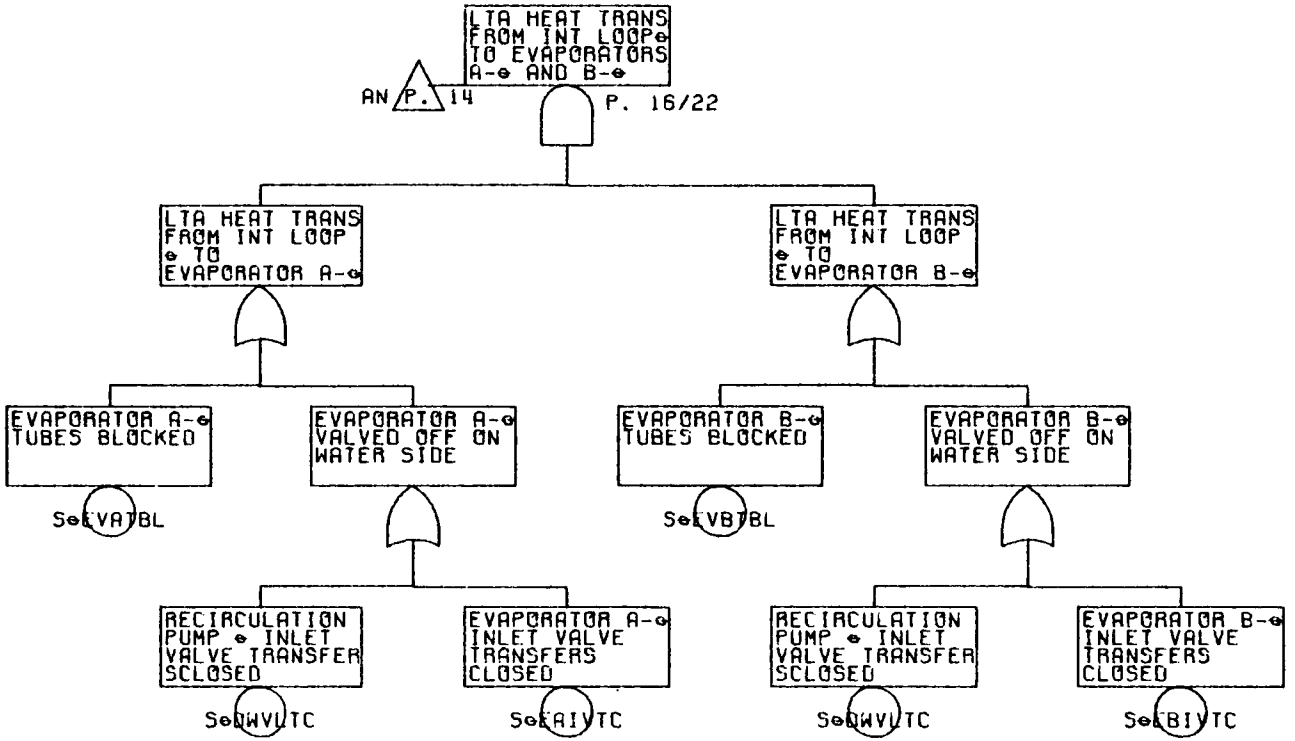

Figure II-3. (continued)

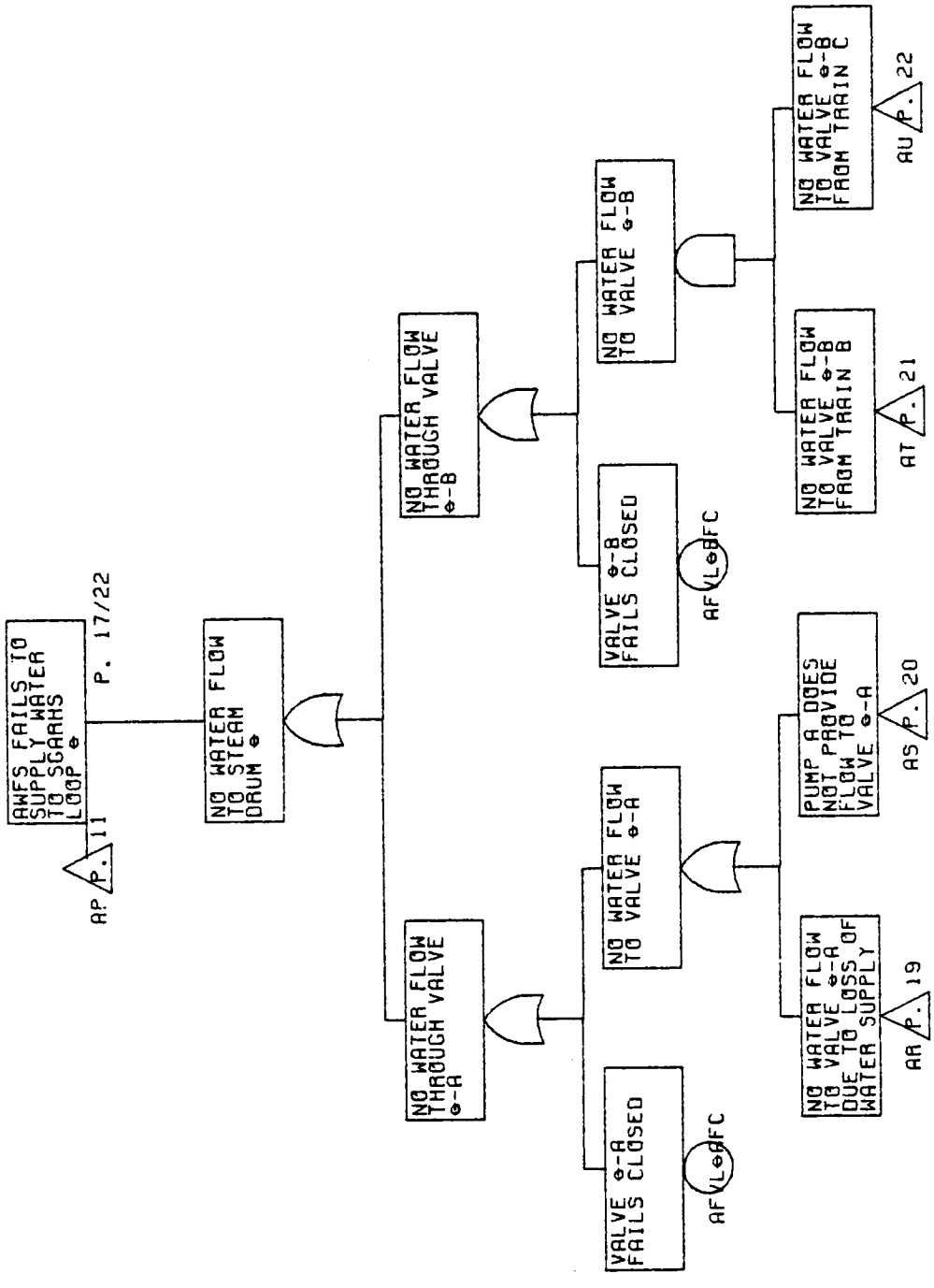

Figure II-3. (continued)

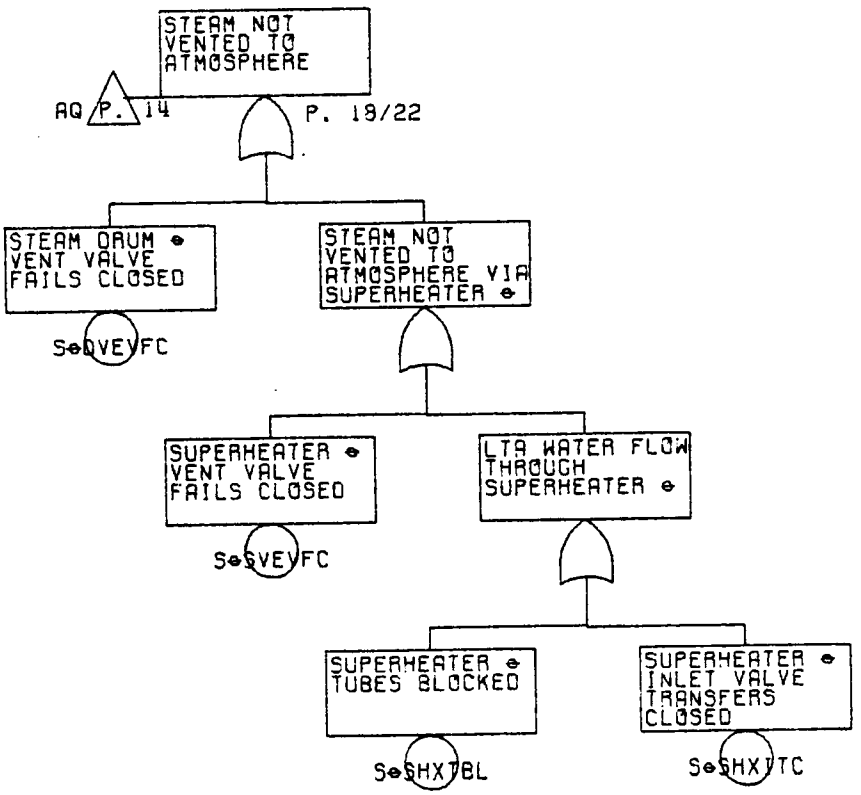

Figure II-3. (continued)

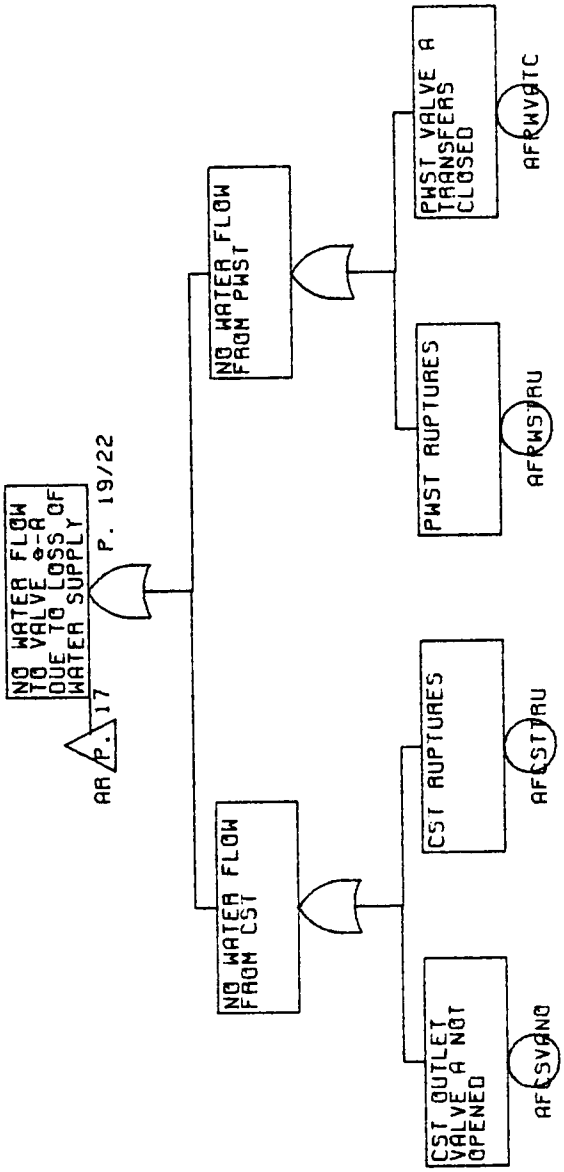

Figure II-3. (continued)

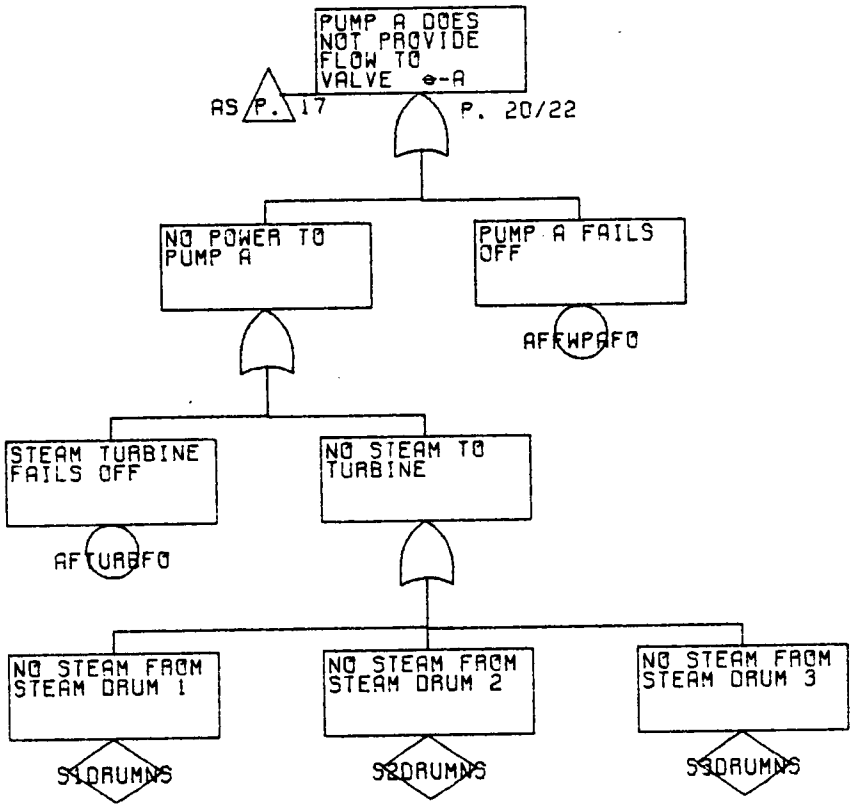

Figure II-3. (continued)

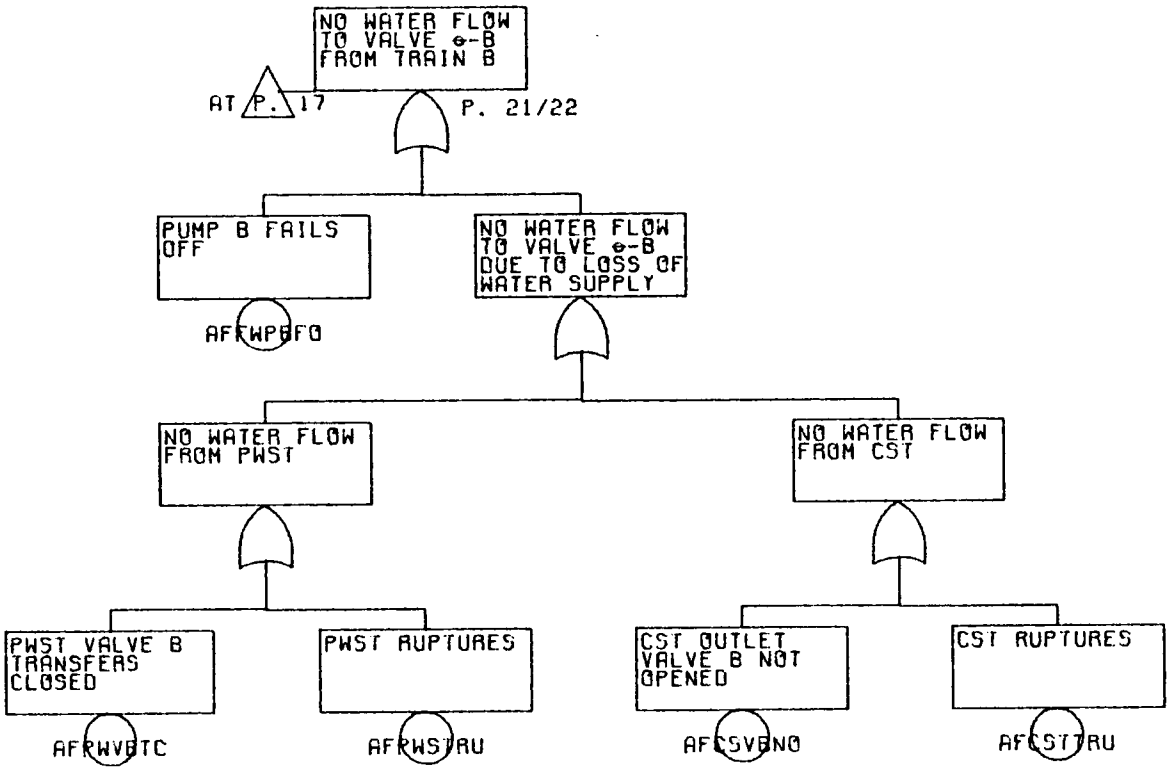

Figure II-3. (continued)

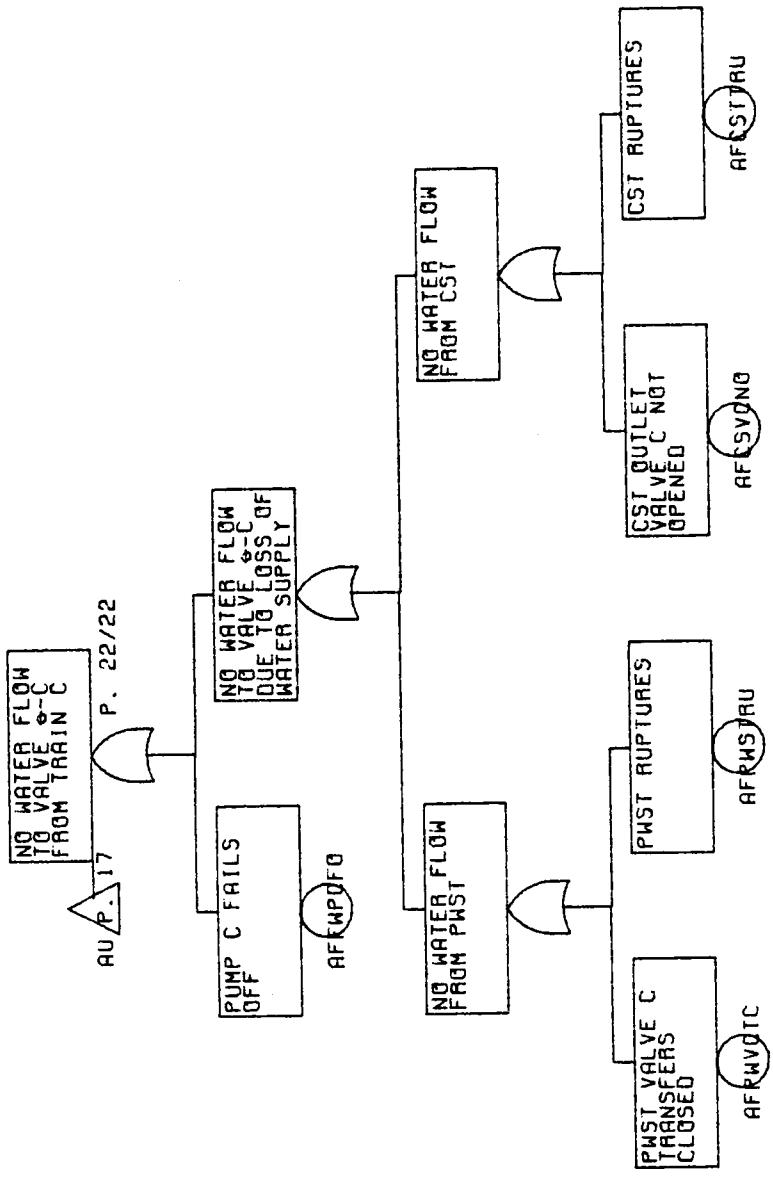

Figure II-3. (continued)

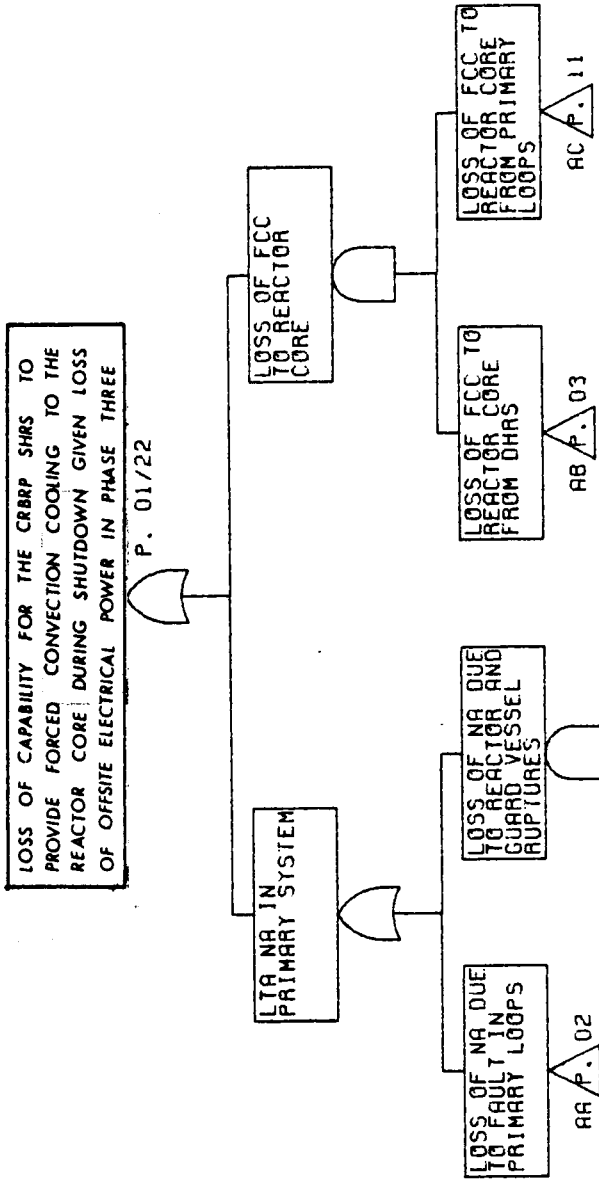

Figure II-4. CRBRP SHRS Phase Three Logic Model.

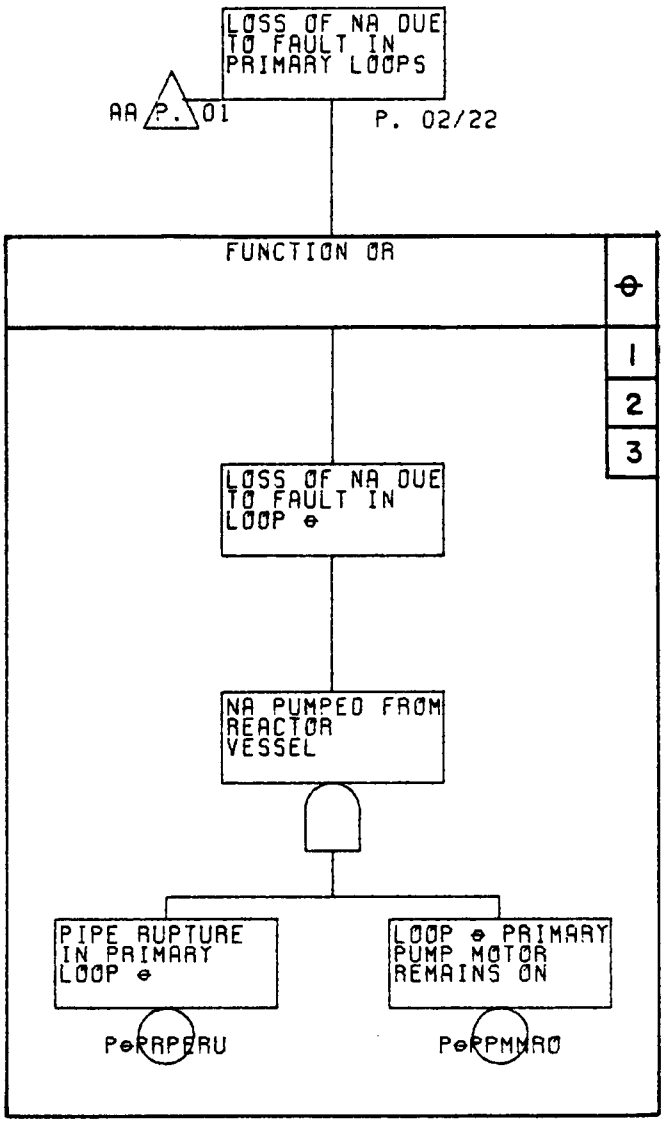

Figure II-4. (continued)

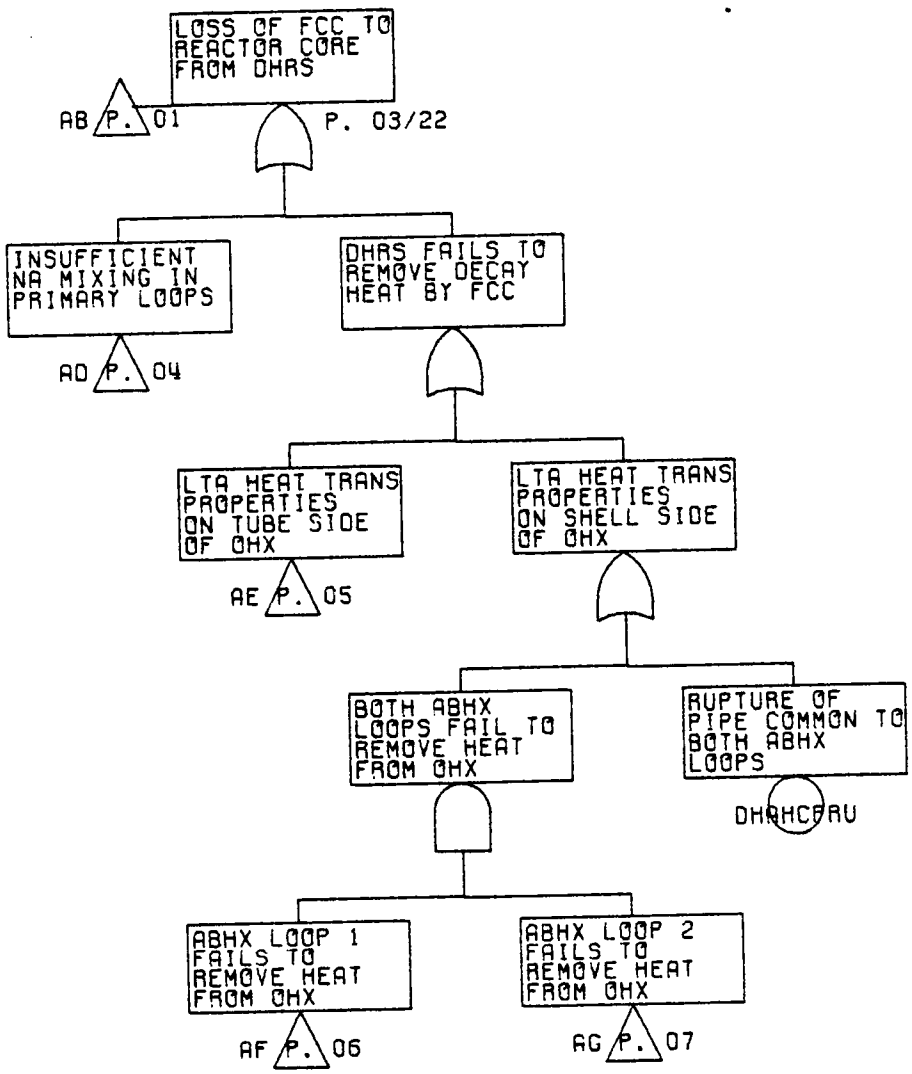

Figure II-4. (continued)

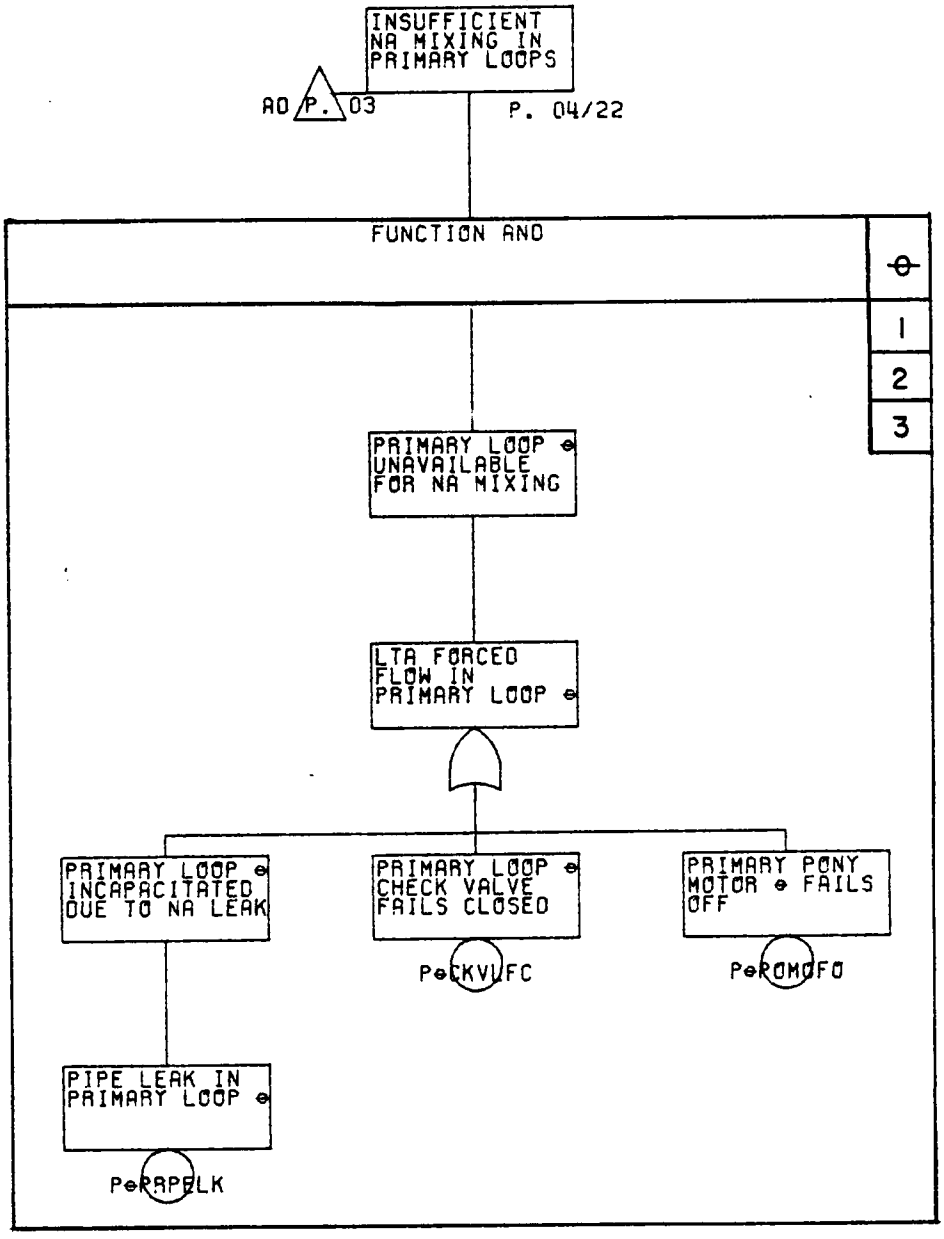

Figure II-4. (continued)

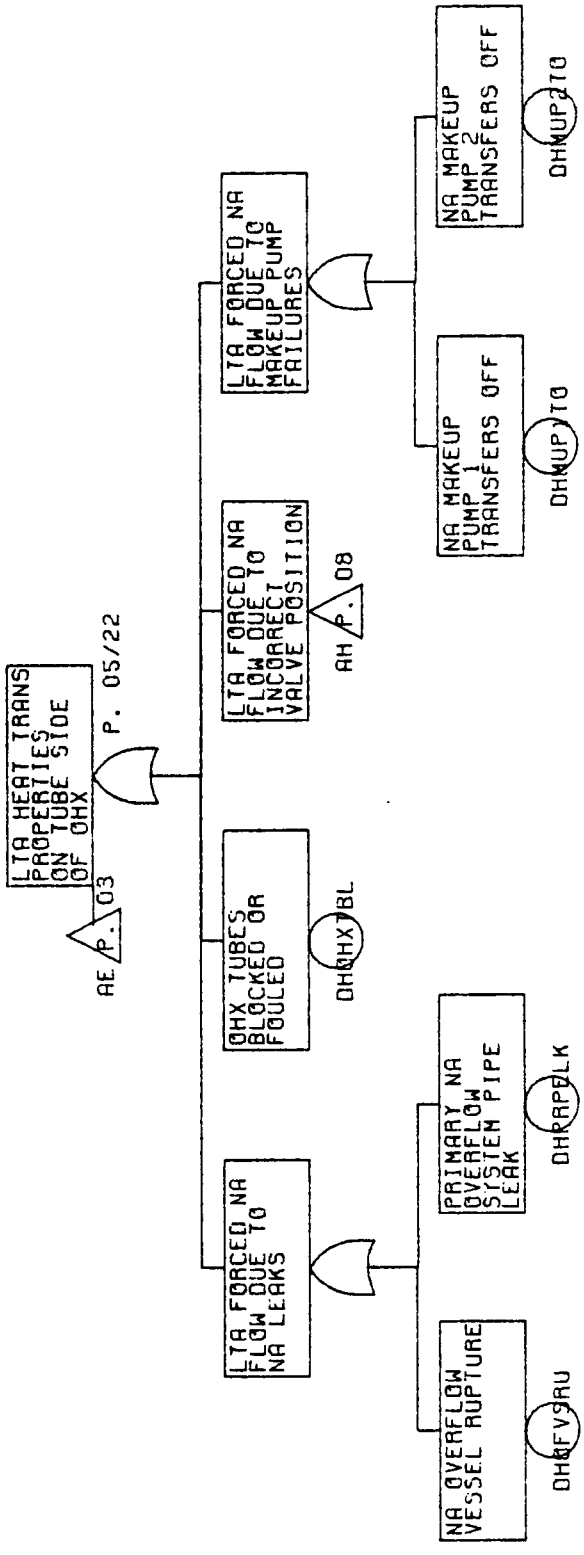

Figure II-4. (continued)

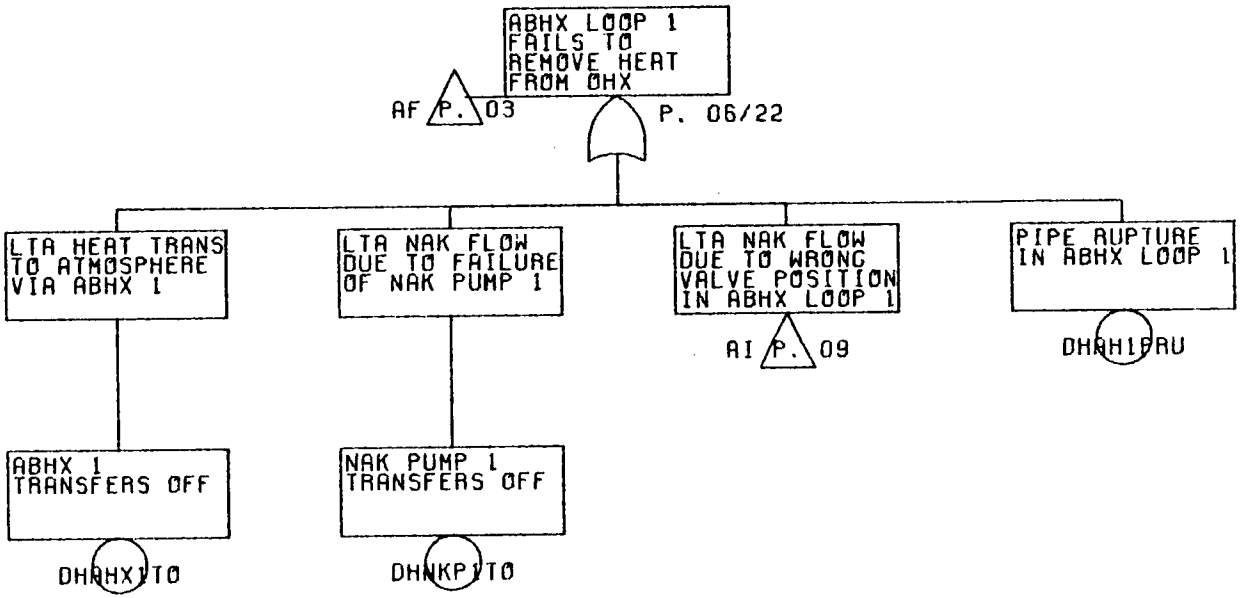

Figure II-4. (continued)

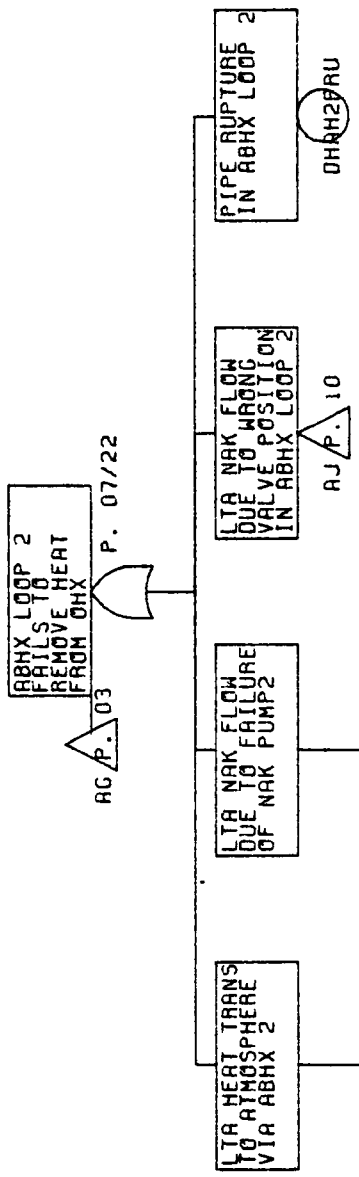

Figure II-4. (continued)

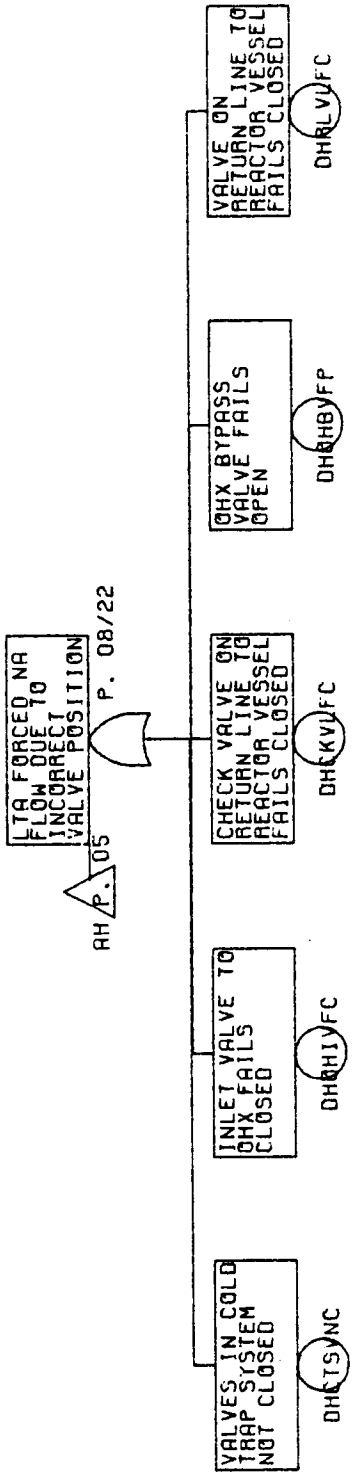

Figure II-4. (continued)

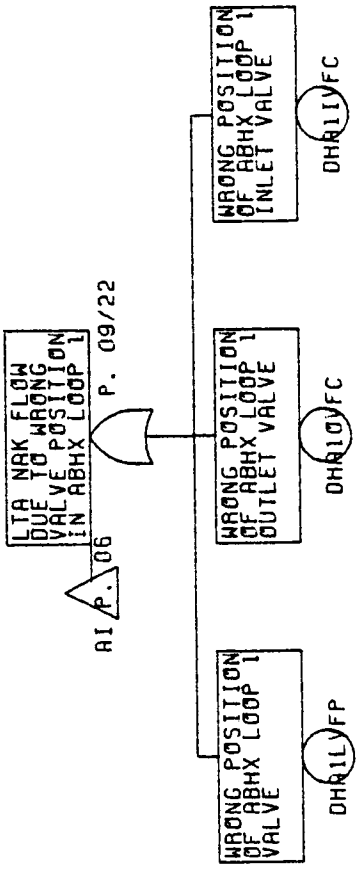

Figure II-4. (continued)

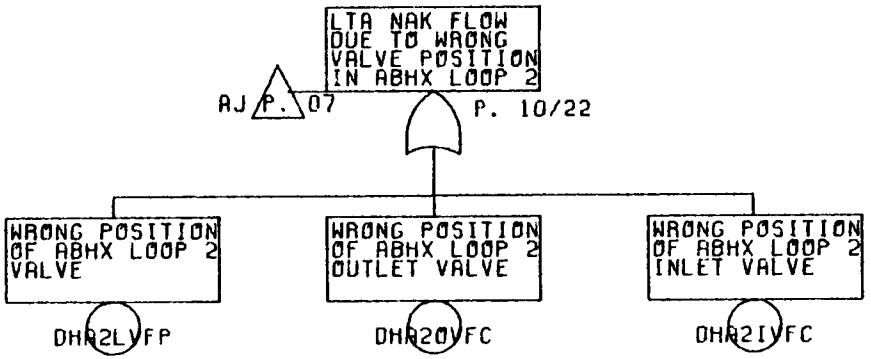

Figure II-4. (continued)

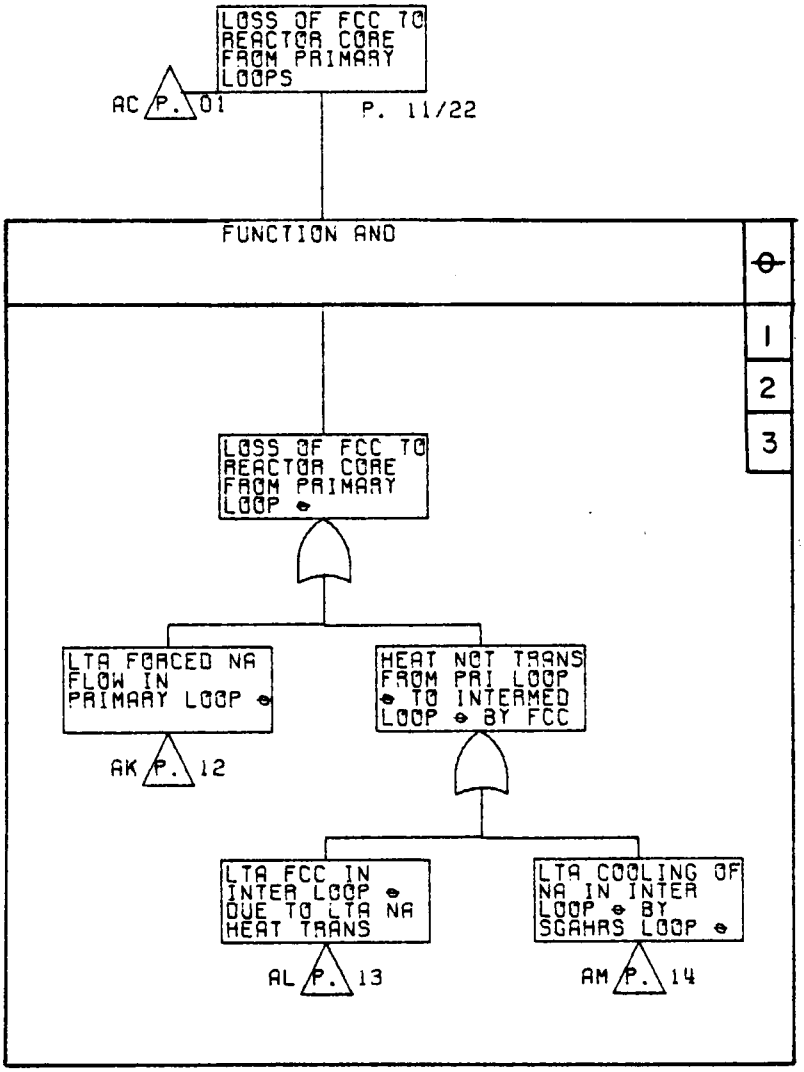

Figure II-4. (continued)

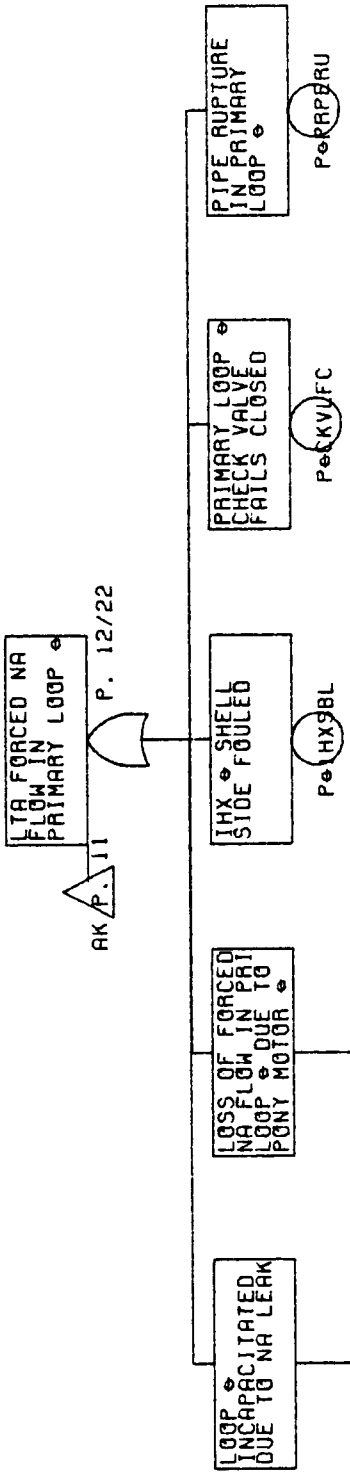

Figure II-4. (continued)

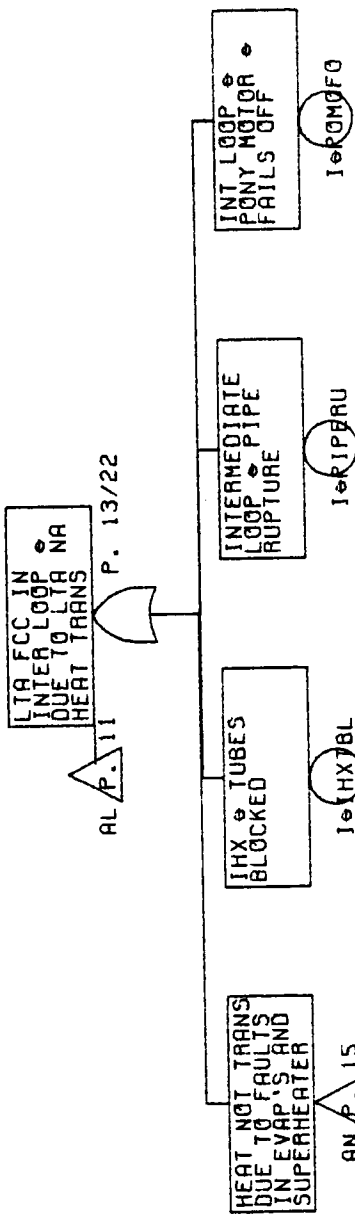

Figure II-4. (continued)

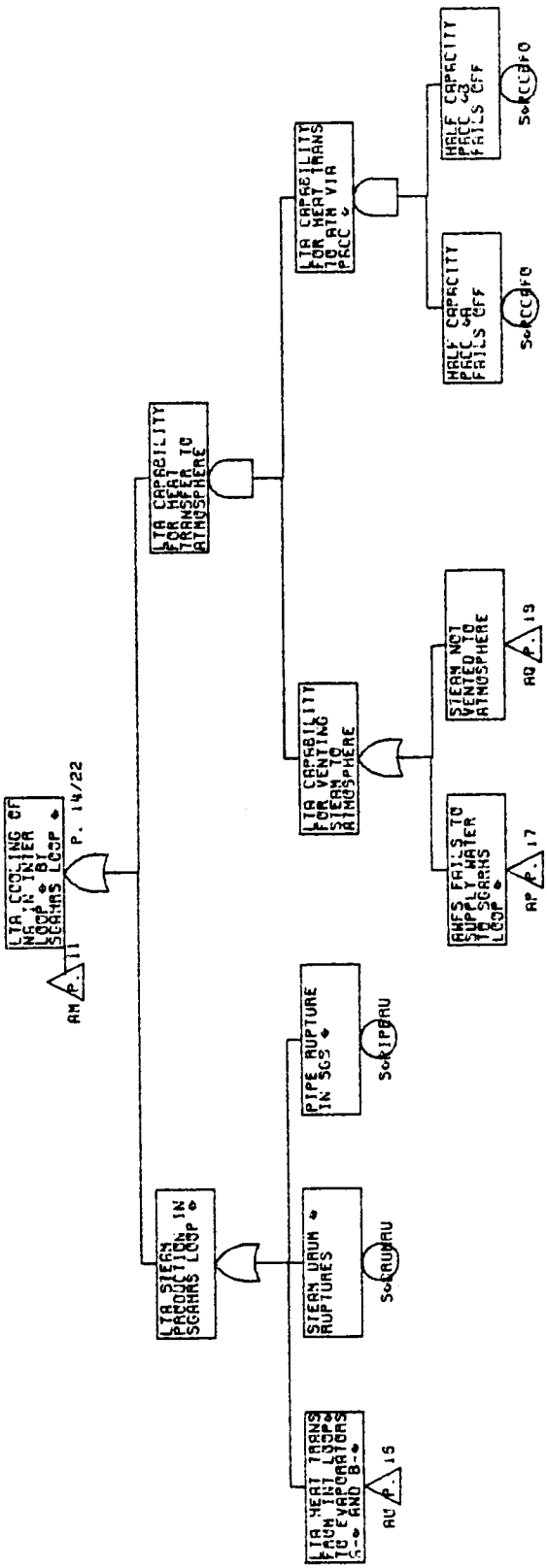

Figure II-4. (continued)

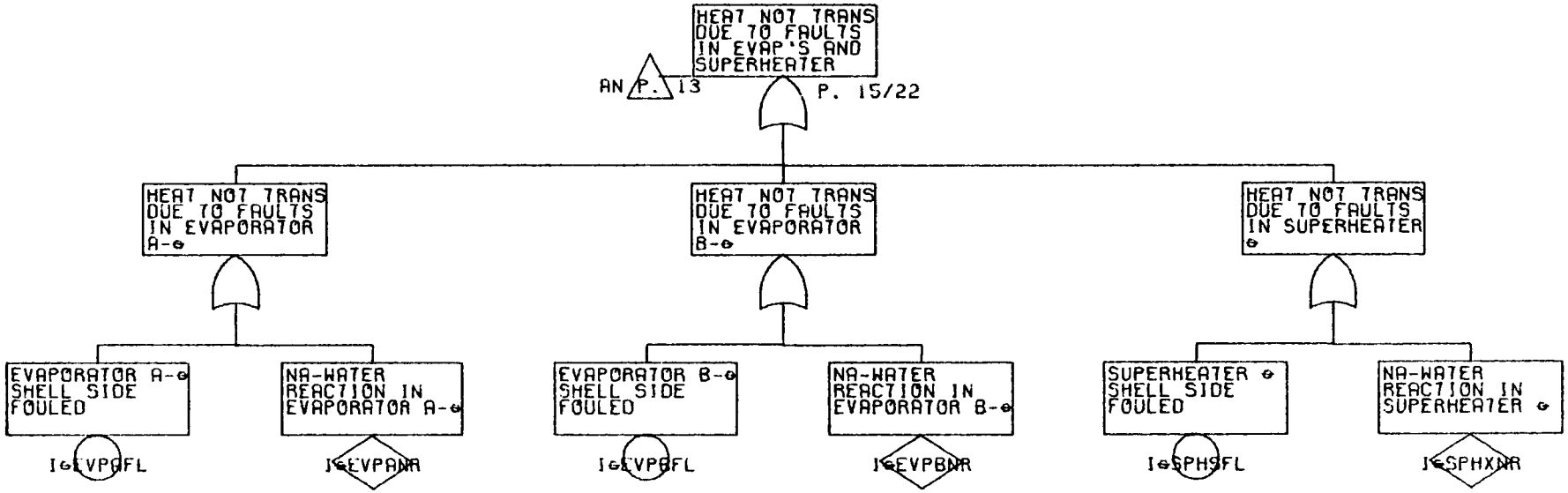

Figure II-4. (continued)

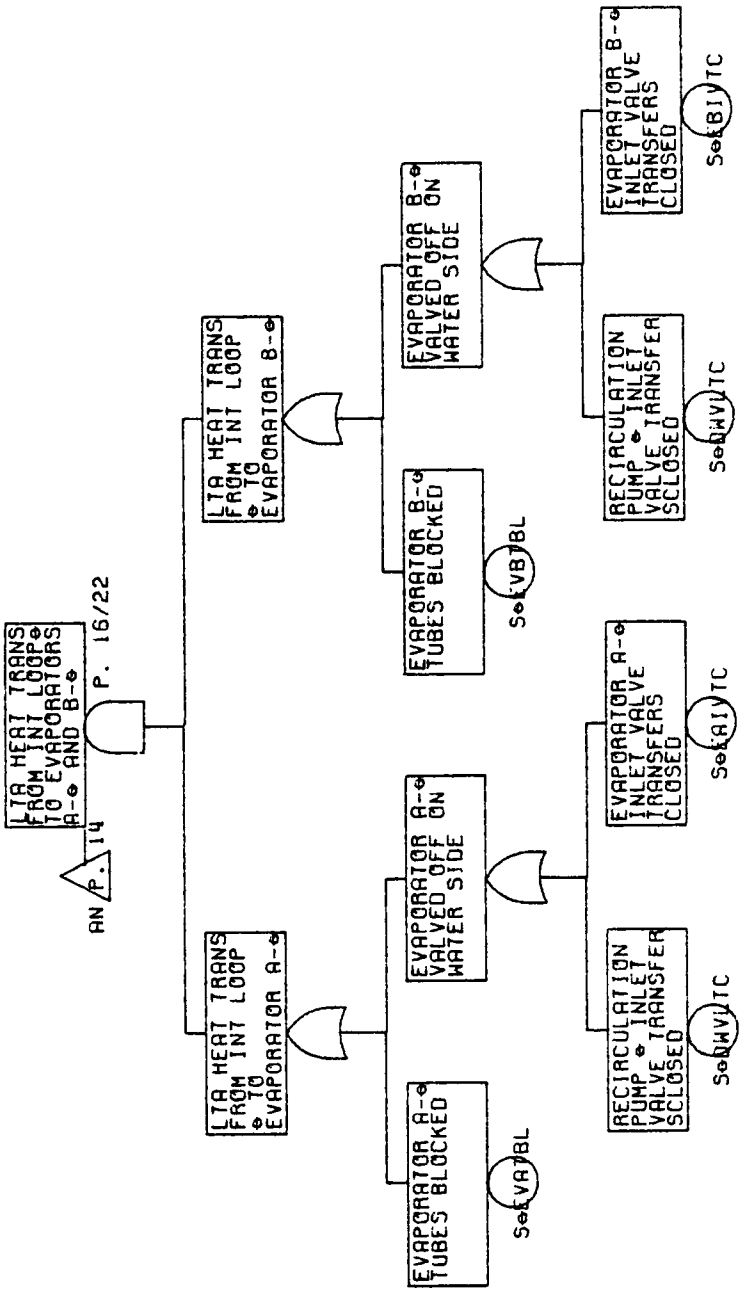

Figure II-4. (continued)

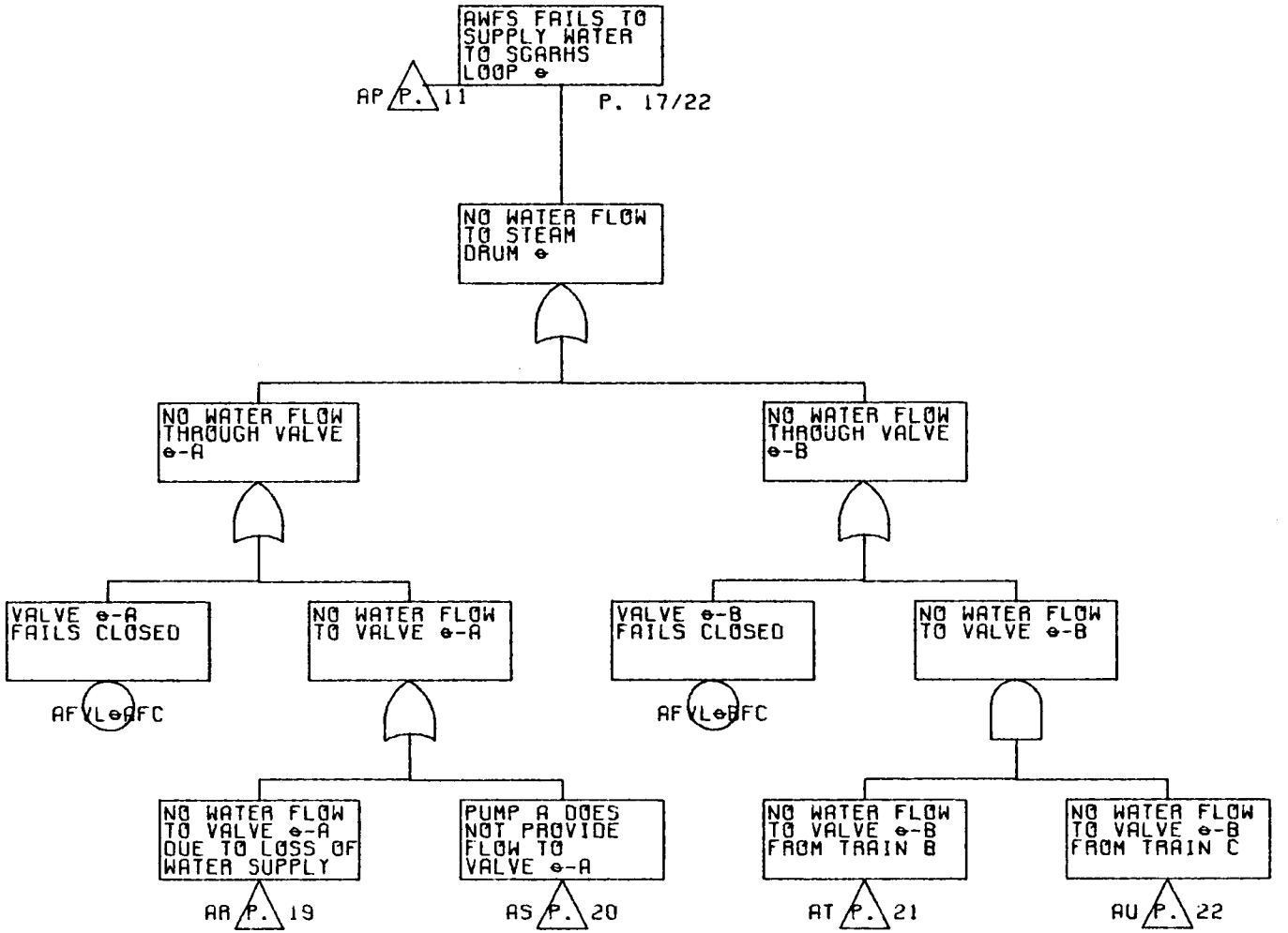

Figure II-A. (continued)

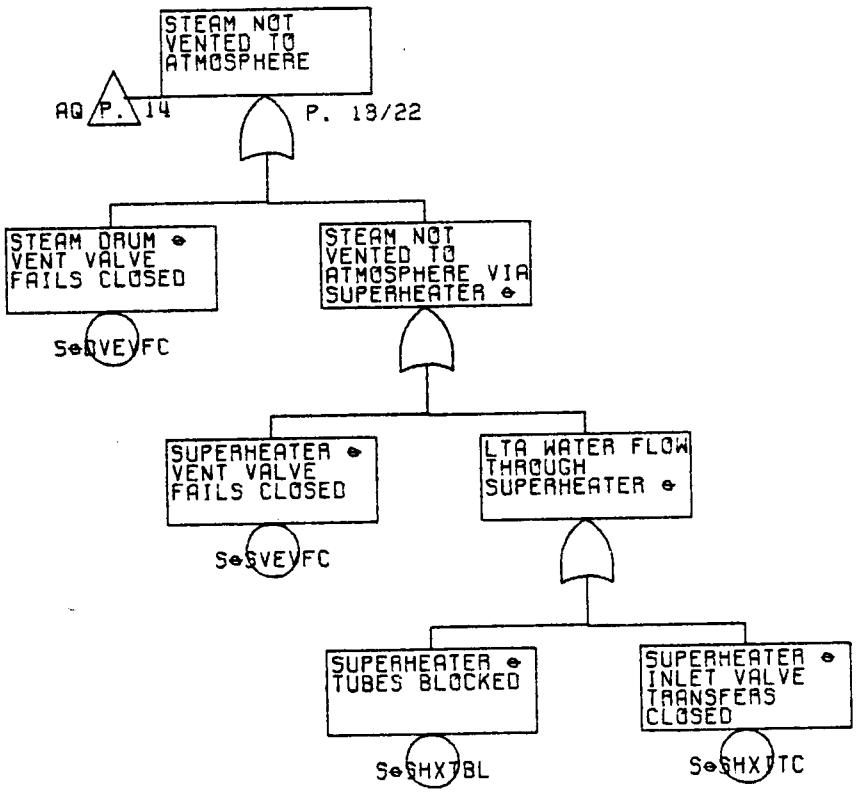

Figure II-4. (continued)

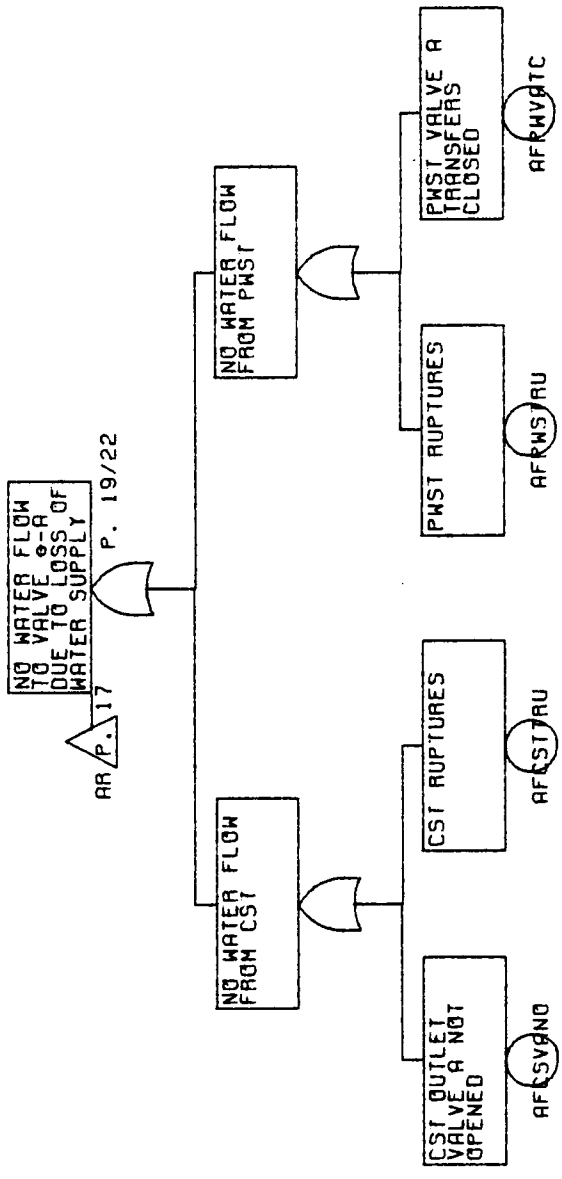

Figure II-4. (continued)

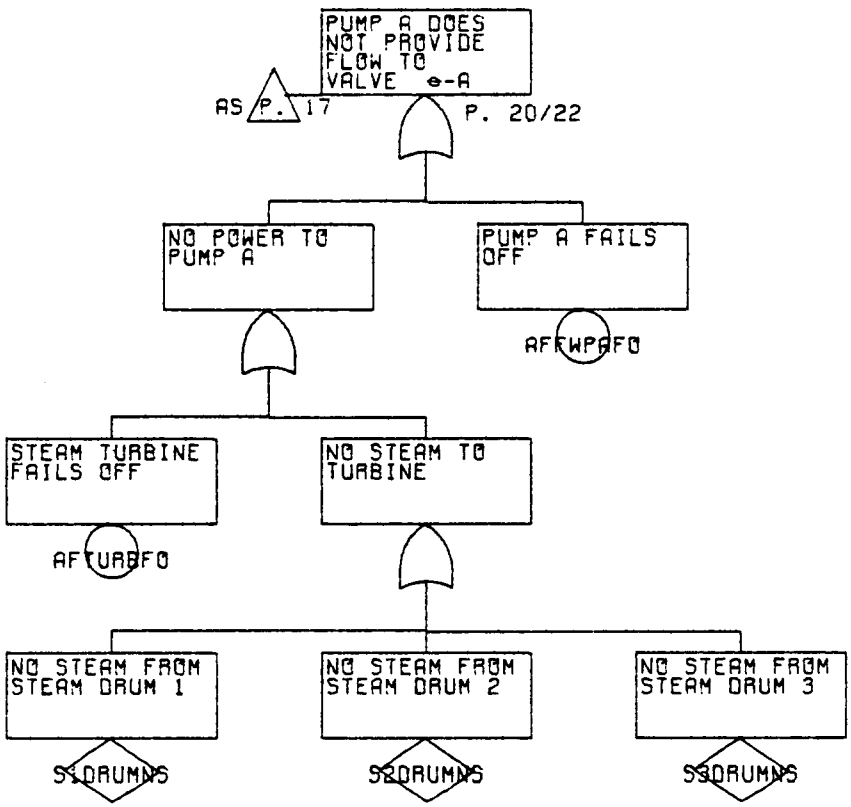

Figure II-4. (continued)

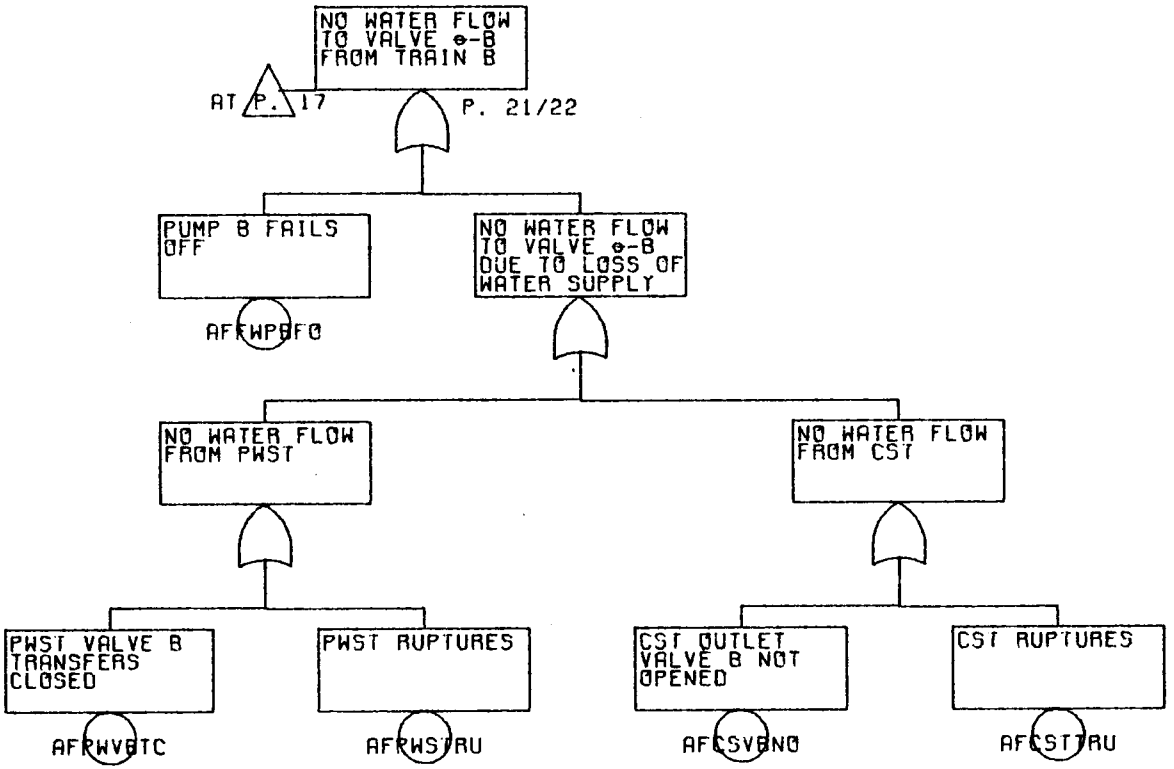

Figure II-4. (continued)

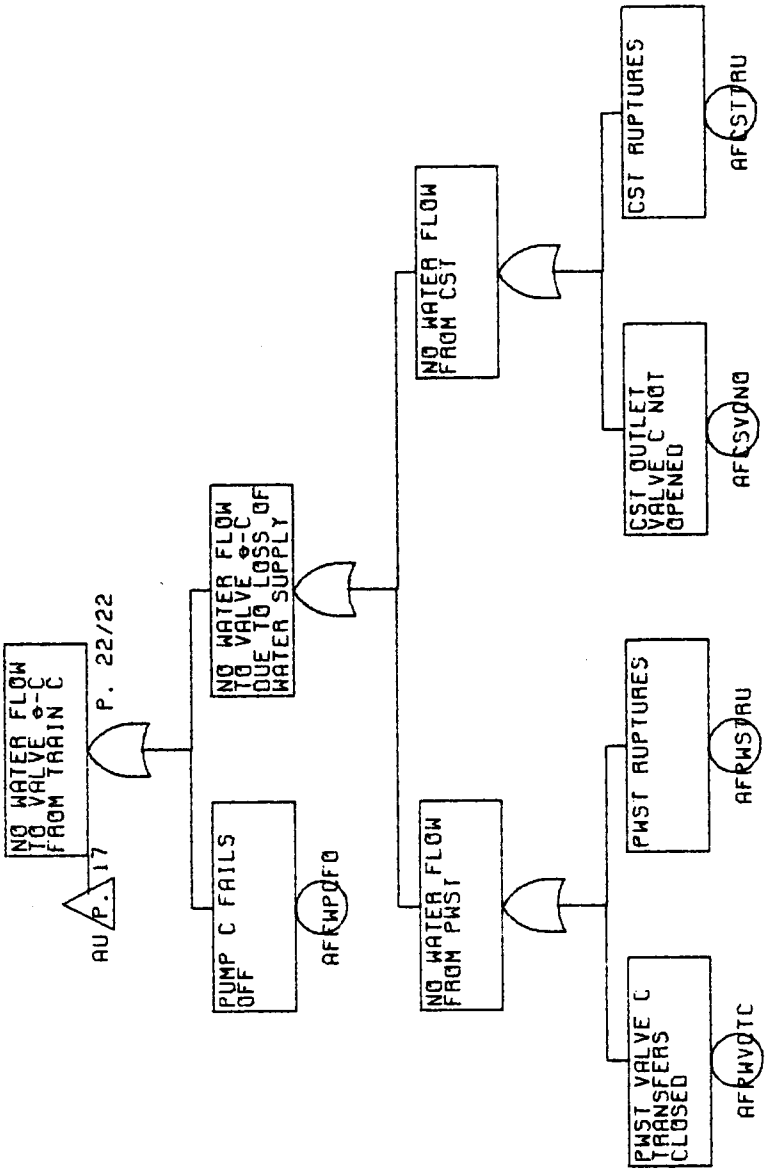

Figure II-4. (continued)

APPENDIX III

INPUT DATA FOR THE CRBRP SHUTDOWN HEAT REMOVAL SYSTEM COMMON CAUSE FAILURE ANALYSIS

The input data for the common cause failure analysis appears in Figure III-1. The data includes the generic cause susceptibilities, physical locations, and special conditions for each basic event in the analysis.

BACFIRE II

A PROGRAM TO OBTAIN COMMON CAUSE CANDIDATES FOR COMPLEX SYSTEMS

UNIVERSITY OF TENNESSEE DEPARTMENT OF NUCLEAR ENGINEERING

CRBRP SHRS COMMON CAUSE FAILURE ANALYSIS

NUMBER OF BASIC EVENTS	134
NUMBER OF GENERIC CAUSE SUSCEPTABILITIES	19
SENSITIVITY CUT OFF	0
NUMBER OF MANUFACTURERS	0
NUMBER OF LOCATIONS	26
NUMBER OF MAPS USED	6

Figure III-1. CRBRP SHRS Common Cause Failure Analysis Data.

```
      JOB TITLE:    UNIVERSITY OF TENNESSEE DEPARTMENT OF NUCLEAR ENGINEERING                                    PAGE   2
JOB DESCRIPTION:    CRBRP SHRS COMMON CAUSE FAILURE ANALYSIS                                    BACFIRE II VERSION 1 APRIL/78

*****************************************************************************************************************************

                                                    INPUT TO BACFIRE II

*****************************************************************************************************************************


DATA SET ONE: CONTROL CARDS IMAGES

----+----|----+----|----+----|----+----|----+----|----+----|----+----|----+----|
DATA         21   25   27    0
    1   31  GE          0              0

DATA SET TWO: EVENT DEFINITIONS CARD IMAGES

----+----|----+----|----+----|----+----|----+----|----+----|----+----|----+----|
DHCHBVFP                                          1     IP   R    CR
                                               CB04     000000000000000 0 0 0 0 0
DHPLVLFC                                          1     IP   R    CR
                                               CB04     000000000000000 0 0 0 0 0
DHCTSVNC                                          1     IP   R    CR
                                               CB04     000000000000000 0 0 0 0 0
DHA1IVFC                                          1     NI        C
                                               RSB1     000000000000000 0 0 0 0 0
DHA1LVFP                                          1     NI        C
                                               RSB1     000000000000000 0 0 0 0 0
AFPWSTRU                                          1     IP        C    PE
                                               AFPW     000000000000000 0 0 0 0 0
AFCSTTRU                                          1     IP        C
                                               AFCS     000000000000000 0 0 0 0 0
AFTURBFO                                          1     IP        C
                                               AFPA     000000000000000 0 0 0 0 0
AFFWPAFO                                          1     IP        C
                                               AFPA     000000000000000 0 0 0 0 0
AFFWPBFO                                          1     IP        C
                                               AFPB     000000000000000 0 0 0 0 0
AFFWPCFO                                          1     IP        C
                                               AFPC     000000000000000 0 0 0 0 0
AFCSVANO                                          1     IP        C
                                               AFCS     000000000000000 0 0 0 0 0
AFCSVBNO                                          1     IP        C
                                               AFCS     000000000000000 0 0 0 0 0
```

Figure III-1. (continued)

```
      JOB TITLE:    UNIVERSITY OF TENNESSEE DEPARTMENT OF NUCLEAR ENGINEERING                                    PAGE   3
JOB DESCRIPTION:    CRBRP SHRS COMMON CAUSE FAILURE ANALYSIS                                  BACFIRE II VERSION 1 APRIL/78

S3DRUMNS                                  1
                                        NONE     000000000000000 0 0 0 0 0
S2DRUMNS                                  1
                                        NONE     000000000000000 0 0 0 0 0
S1DRUMNS                                  1
                                        NONE     000000000000000 0 0 0 0 0
AFCSVCNO                                  1      IP         C
                                        AFCS     000000000000000 0 0 0 0 0
AFPWVCTC                                  1      IP         C
                                        AFPW     000000000000000 0 0 0 0 0
AFPWVATC                                  1      IP         C
                                        AFPW     000000000000000 0 0 0 0 0
AFPWVBTC                                  1      IP         C
                                        AFPW     000000000000000 0 0 0 0 0
AFVL1BFC                                  1      IP         C
                                        SGA1     000000000000000 0 0 0 0 0
AFVL1ATC                                  1      IP         C
                                        SGA1     000000000000000 0 0 0 0 0
AFVL2BFC                                  1      IP         C
                                        SGA2     000000000000000 0 0 0 0 0
AFVL2ATC                                  1      IP         C
                                        SGA2     000000000000000 0 0 0 0 0
AFVL3BFC                                  1      IP         C
                                        SGA3     000000000000000 0 0 0 0 0
AFVL3ATC                                  1      IP         C
                                        SGA3     000000000000000 0 0 0 0 0
S3DRUMRU                                  1      IPS        C    BW
                                        SGA3     000000000000000 0 0 0 0 0
S2DRUMRU                                  1      IPS        C    BW
                                        SGA2     000000000000000 0 0 0 0 0
S1DRUMRU                                  1      IPS        C    BW
                                        SGA1     000000000000000 0 0 0 0 0
S1DVEVFC                                  1      IP         C
                                        SGA1     000000000000000 0 0 0 0 0
S2DVEVFC                                  1      IP         C
                                        SGA2     000000000000000 0 0 0 0 0
S3DVEVFC                                  1      IP         C
                                        SGA3     000000000000000 0 0 0 0 0
S3SVEVFC                                  1      IP         C
                                        SG03     000000000000000 0 0 0 0 0
S2SVEVFC                                  1      IP         C
                                        SG02     000000000000000 0 0 0 0 0
S1SVEVFC                                  1      IP         C
                                        SG01     000000000000000 0 0 0 0 0
S2SHXITC                                  1      IP         C
                                        SG02     000000000000000 0 0 0 0 0
```

Figure III-1. (continued)

```
S3SHXITC          1     IP        C
                SG03    0000000000000000 0 0 0 0 0
S1SHXITC          1     IP        C
                SG01    0000000000000000 0 0 0 0 0
S3FAIVTC          1     IP        C
                SG03    0000000000000000 0 0 0 0 0
S3FBIVTC          1     IP        C
                SG03    0000000000000000 0 0 0 0 0
S2FBIVTC          1     IP        C
                SG02    0000000000000000 0 0 0 0 0
S2FAIVTC          1     IP        C
                SG02    0000000000000000 0 0 0 0 0
S1FBIVTC          1     IP        C
                SG01    0000000000000000 0 0 0 0 0
S1FAIVTC          1     IP        C
                SG01    0000000000000000 0 0 0 0 0
S3DHVLTC          1     IP        C
                SGB3    0000000000000000 0 0 0 0 0
S2DHVLTC          1     IP        C
                SGB2    0000000000000000 0 0 0 0 0
S1DHVLTC          1     IP        C
                SGB1    0000000000000000 0 0 0 0 0
S3PIPERU          3     IP        C
                SG03    0000000000000000 0 0 0 0 0
                SGA3
                SGB3
S1PIPERU          3     IP        C
                SG01    0000000000000000 0 0 0 0 0
                SGA1
                SGB1
S2PIPERU          3     IP        C
                SG02    0000000000000000 0 0 0 0 0
                SGA2
                SGB2
S1FVBTRL          1     IS        CR    AIPT
                SG01    0000000000000000 0 0 0 0 0
FPXXXXNA          1
                NONE    0000000000000000 0 0 0 0 0
S1FVATRL          1     IS        CR    AIPT
                SG01    0000000000000000 0 0 0 0 0
S2FVBTRL          1     IS        CR    AIPT
                SG02    0000000000000000 0 0 0 0 0
S2FVATRL          1     IS        CR    AIPT
                SG02    0000000000000000 0 0 0 0 0
S3FVBTRL          1     IS        CR    AIPT
                SG03    0000000000000000 0 0 0 0 0
S3FVATRL          1     IS        CR    AIPT
                SG03    0000000000000000 0 0 0 0 0
S1SHXTRL          1     IS        CR    AIPT
                SG01    0000000000000000 0 0 0 0 0
```

Figure III-1. (continued)

```
      JOB TITLE:    UNIVERSITY OF TENNESSEE DEPARTMENT OF NUCLEAR ENGINEERING                                    PAGE   5
JOB DESCRIPTION:    CRBRP SHRS COMMON CAUSE FAILURE ANALYSIS                                   BACFIRE II VERSION 1 APRIL/78

S3SHXTBL                                  1     IS        CR   AIPT
                                        SG03    000000000000000 0 0 0 0 0
S2SHXTBL                                  1     IS        CR   AIPT
                                        SG02    000000000000000 0 0 0 0 0
P1PRPERU                                  1     NI   R    CR
                                        CB01    000000000000000 0 0 0 0 0
P2PRPERU                                  1     NI   R    CR
                                        CB02    000000000000000 0 0 0 0 0
P1PRPELK                                  1     NIP  R    CR
                                        CB01    000000000000000 0 0 0 0 0
P2PRPELK                                  1     NIP  R    CR
                                        CB02    000000000000000 0 0 0 0 0
P3PRPERU                                  1     NI   R    CR
                                        CB03    000000000000000 0 0 0 0 0
P3PRPELK                                  1     NIP  R    CR
                                        CB03    000000000000000 0 0 0 0 0
DHPRPELK                                  1     NIP  R    CR
                                        CB04    000000000000000 0 0 0 0 0
DHCKVLFC                                  1     NIP  R    CR   WP
                                        CB04    000000000000000 0 0 0 0 0
DHDFVSRU                                  1     NIP  R    CR   BI
                                        CB04    000000000000000 0 0 0 0 0
DHMUP2TO                                  1     NIP  R    CR   AI
                                        CB04    000000000000000 0 0 0 0 0
DHMUP1TO                                  1     NIP  R    RC   AI
                                        CB04    000000000000000 0 0 0 0 0
S3PCCAFO                                  1     IPS       C    CI
                                        SGP3    000000000000000 0 0 0 0 0
S3PCCBFO                                  1     IPS       C    CI
                                        SGP3    000000000000000 0 0 0 0 0
S2PCCAFO                                  1     IPS       C    CI
                                        SGP2    000000000000000 0 0 0 0 0
S2PCCBFO                                  1     IPS       C    CI
                                        SGP2    000000000000000 0 0 0 0 0
S1PCCBFO                                  1     IPS         C  CI
                                        SGP1    000000000000000 0 0 0 0 0
S1PCCAFO                                  1     IPS       C    CI
                                        SGP1    000000000000000 0 0 0 0 0
DHA1OVFC                                  1     NI        CP
                                        RSB1    000000000000000 0 0 0 0 0
DHOH1VFC                                  1     NI        CR
                                        CB04    000000000000000 0 0 0 0 0
DHA2OVFC                                  1     NI        C
                                        RSB2    000000000000000 0 0 0 0 0
PSPGVSRU                                  4     I    R         WI
                                        CB01    000000000000000 0 0 0 0 0
```

Figure III-1. (continued)

```
                    CB02
                    CB03
                    CB04
I3PIPELK              1     NI    R     CR
                    SG03    0000000000000000 0 0 0 0 0
I2PIPELK              1     NI    R     CR
                    SG02    0000000000000000 0 0 0 0 0
I1PIPELK              1     NI    R     CR
                    SG01    0000000000000000 0 0 0 0 0
I1PIPERU              1     NI    R     CR
                    SG01    0000000000000000 0 0 0 0 0
I2PIPERU              1     NI    R     CR
                    SG02    0000000000000000 0 0 0 0 0
I3PIPERU              1     NI    R     CR
                    SG03    0000000000000000 0 0 0 0 0
PSPXVSRU              4     I     R           BW
                    CB01    0000000000000000 0 0 0 0 0
                    CB02
                    CB03
                    CB04
DHA2IVFC              1     NI          C
                    RSB2    0000000000000000 0 0 0 0 0
DHA2LVFP              1     NI          C
                    RSB2    0000000000000000 0 0 0 0 0
DHAHX2FD              1     INS         C     JO
                    RSA2    0000000000000000 0 0 0 0 0
DHAHX1TD              1     INS         C     JO
                    RSA1    0000000000000000 0 0 0 0 0
DHAHCPRU              4     NIP         C
                    RSA1    0000000000000000 0 0 0 0 0
                    RSA2
                    RSB2
                    RSB1
DHAH1PRU              1     NIP         C
                    RSB1    0000000000000000 0 0 0 0 0
DHAH2PRU              1     NIP         C
                    RSB2    0000000000000000 0 0 0 0 0
DHNKP2FD              1     IN          C
                    RSB2    0000000000000000 0 0 0 0 0
DHNKP1TD              1     IN          C
                    RSB1    0000000000000000 0 0 0 0 0
I1SPHXNP              1     PSN         CR    AIPT
                    SG01    0000000000000000 0 0 0 0 0
I1EVPANR              1     PSN         CR    AIPT
                    SG01    0000000000000000 0 0 0 0 0
I1EVPBNP              1     PSN         CR    AIPT
                    SG01    0000000000000000 0 0 0 0 0
I2SPHXNR              1     PSN         CR    AIPT
                    SG02    0000000000000000 0 0 0 0 0
```

Figure III-1. (continued)

```
      JOB TITLE:    UNIVERSITY OF TENNESSEE DEPARTMENT OF NUCLEAR ENGINEERING                                    PAGE   7
JOB DESCRIPTION:    CRBRP SHRS COMMON CAUSE FAILURE ANALYSIS                                   BACFIRE II VERSION 1 APRIL/78

I2EVPANR                                  1     PSN        CR    AIPT
                                        SG02    000000000000000 0 0 0 0 0
I2EVPBNR                                  1     PSN        CR    AIPT
                                        SG02    000000000000000 0 0 0 0 0
I3SPHXNR                                  1     PSN        CR    AIPT
                                        SG03    000000000000000 0 0 0 0 0
I3EVPANR                                  1     PSN        CR    AIPT
                                        SG03    000000000000000 0 0 0 0 0
I3EVPBNR                                  1     PSN        CR    AIPT
                                        SG03    000000000000000 0 0 0 0 0
P1CKVLFC                                  1     NIP  R     CR    FW
                                        CB01    000000000000000 0 0 0 0 0
P3CKVLFC                                  1     NIP  R     CR    FW
                                        CB03    000000000000000 0 0 0 0 0
P2CKVLFC                                  1     NIP  R     CR    FW
                                        CB02    000000000000000 0 0 0 0 0
I3POMOFO                                  1     IP         CR    BJ
                                        SG03    000000000000000 0 0 0 0 0
I2POMOFO                                  1     IP         CR    BJ
                                        SG02    000000000000000 0 0 0 0 0
I1POMOFO                                  1     IP         CR    BJ
                                        SG01    000000000000000 0 0 0 0 0
I1SPHSFL                                  1     NSP  R     CR    AI
                                        SG01    000000000000000 0 0 0 0 0
I2SPHSFL                                  1     NSP  R     CR    AI
                                        SG02    000000000000000 0 0 0 0 0
I3SPHSFL                                  1     NSP  R     CR    AI
                                        SG03    000000000000000 0 0 0 0 0
I1EVPAFL                                  1     NSP  R     CR    AIPT
                                        SG01    000000000000000 0 0 0 0 0
I2EVPAFL                                  1     NSP        CR    AIPT
                                        SG02    000000000000000 0 0 0 0 0
I3EVPAFL                                  1     NSP  R     RC    AIPT
                                        SG03    000000000000000 0 0 0 0 0
I1EVPBFL                                  1     NSP  R     CR    AIPT
                                        SG01    000000000000000 0 0 0 0 0
I2EVPBFL                                  1     NSP  R     CR    AIPT
                                        SG02    000000000000000 0 0 0 0 0
I3EVPBFL                                  1     NSP  R     CR    AIPT
                                        SG03    000000000000000 0 0 0 0 0
I2IHXTBL                                  1     NSP  R     CR    FW
                                        CB02    000000000000000 0 0 0 0 0
I3IHXTBL                                  1     NSP  R     CR    FW
                                        CB03    000000000000000 0 0 0 0 0
I1IHXTBL                                  1     NSP  R     CR    FW
                                        CB01    000000000000000 0 0 0 0 0
```

Figure III-1. (continued)

```
P1IHXSAL                                    1     NSP  R    CR   FW
                                          CB01    0000000000000000 0 0 0 0 0
P2IHXSAL                                    1     NSP  R    CR   FW
                                          CB02    0000000000000000 0 0 0 0 0
P3IHXSAL                                    1     NSP  R    CR   FW
                                          CB03    0000000000000000 0 0 0 0 0
DHOHXTAL                                    1     NSP  R    CR
                                          CB04    0000000000000000 0 0 0 0 0
P1POMOFO                                    1     IP   R    CR   BJ
                                          CB01    0000000000000000 0 0 0 0 0
P1PPMMPO                                    1     IP   R    CR   BJ
                                          CB01    0000000000000000 0 0 0 0 0
P2PPMMPO                                    1     IP   R    CR   BJ
                                          CB02    0000000000000000 0 0 0 0 0
P2POMOFO                                    1     IP   R    CR   BJ
                                          CB02    0000000000000000 0 0 0 0 0
P3PPMMPO                                    1     IP   R    CR   BJ
                                          CB03    0000000000000000 0 0 0 0 0
P3POMOFO                                    1     IP   R    CR   BJ
                                          CB03    0000000000000000 0 0 0 0 0
```

DATA SET THREE: EVENT LOCATION REFERENCES CARD IMAGES

```
----+----1----+----1----+----1----+----1----+----1----+----1----+----1----+----1----+----1----+----1
    6
          NONE NONE NONE NONE NONE NONE NONE
          CB01 ST01 PR01 IM01 RAD1 COR1 RX05
          CB02 ST02 PR02 IM02 RAD1 COR1 RX06
          CB03 ST03 PR03 IM03 RAD1 COR1 RX07
          CB04 ST04 PR04 IM04 RAD1 COR1 RX08
          PSA1 ST04 PR08 IM05 RAD2 COR2 RX03
          PSA2 ST04 PR08 IM06 RAD2 COR2 RX04
          PSB1 ST04 PR08 IM07 RAD1 COR2 RX01
          PSB2 ST04 PR08 IM08 RAD1 COR2 RX02
          SG01 ST01 PR05 IM09 RAD2 COR3 RX09
          SGA1 ST01 PR05 IM10 RAD2 COR4 RX09
          SGB1 ST01 PR05 IM11 RAD2 COR4 RX12
          SG02 ST02 PR06 IM12 RAD2 COR3 RX10
          SGA2 ST02 PR06 IM13 RAD2 COR5 RX10
          SGB2 ST02 PR06 IM14 RAD2 COR5 RX12
          SG03 ST03 PR07 IM15 RAD2 COR3 RX11
          SGA3 ST03 PR07 IM16 RAD2 COR6 RX11
          SG93 ST03 PR07 IM17 RAD2 COR6 RX12
          SGP1 ST01 PR05 IM18 RAD2 COR7 RX12
          SGP2 ST02 PR06 IM19 RAD2 COR8 RX12
          SGP3 ST03 PR07 IM20 RAD2 COR9 RX12
```

Figure III-1. (continued)

```
     JOB TITLE:    UNIVERSITY OF TENNESSEE DEPARTMENT OF NUCLEAR ENGINEERING                                    PAGE   9
JOB DESCRIPTION:   CRBRP SHRS COMMON CAUSE FAILURE ANALYSIS                                  BACFIRE II VERSION 1 APRIL/78


          AFPA ST05 PR09 IM21 RAD2 COR4 RX12
          AFPB ST05 PR09 IM22 RAD2 COR4 RX12
          AFPC ST05 PR09 IM23 RAD2 COR4 RX12
          AFCS ST05 PR10 IM24 RAD2 COR5 RX12
          AFPW ST05 PR09 IM25 RAD2 COR4 RX12

DATA SET FOUR: CAUSE OF SECONDARY FAILURE LIBRARY CARDIMAGES

----+----I----+----I----+----I----+----I----+----I----+----I----+----I----+----I
STRESS                        S    1    1
PRESSURE                      P    1    2
IMPACT                        I    1    3
FREEZING SODIUM               N    1    1
RADIATION DAMAGE              R    2    4
CORROSION                     C    3    5
CHEMICAL REACTION             R    3    6
PACIFIC TUBE COMPANY          PT   4    0
BYRON JACKSON PUMP DIV.       BJ   4    0
ATOMICS INTERNATIONAL         AI   4    0
PROCESS EQUIPMENT CORP.       PE   4    0
CONSECO INCORPORATED          CI   4    0
BINGHAM-WILLAMETTE CO.        BI   4    0
CHICAGO BRIDGE & IRON CO      CB   4    0
FOSTER WHEELER ENERGY CP      FW   4    0
WYATT INDUSTRIES              WI   4    0
BABCOCK AND WILCOX CORP       BW   4    0
WILLIAM POWELL COMPANY        WP   4    0
JOSEPH OAT CORP               JO   4    0

DATA SET FIVE: MANUFACTURERS CARD IMAGES

----+----I----+----I----+----I----+----I----+----I----+----I----+----I----+----I
```

Figure III-1. (continued)

VITA

James John Rooney was born in Philadelphia, Pennsylvania on April 1, 1953. He is the son of Mr. and Mrs. James J. Rooney, Jr. He was raised in Levittown, Pennsylvania. After graduating from Saint Mary's Manor in June 1971, James entered The University of Virginia the following September. He was awarded a Bachelor of Science degree with a major of Chemical Engineering in May 1975.

James entered the graduate program in Nuclear Engineering at The University of Tennessee, Knoxville in September 1975. During the summer of 1977, he received an appointment to the Idaho National Engineering Laboratory through the Associated Western Universities in order to further his graduate research. After receiving the Master of Engineering degree in August 1978, James will pursue a Doctor of Philosophy degree in the field of nuclear systems reliability engineering and risk assessment.