Experimental and Analytical Study of Vane Pump Inefficiencies

Senior Honors Project

Brian E. Tucker
2117 Andy Holt Avenue 707
Knoxville, TN 37916

Submitted in partial fulfillment of the degree of
Bachelors of Science in Mechanical Engineering
under the University of Tennessee
Honors Program

May 8, 1995

Faculty Mentor: Dr. Frank H. Speckhart, P.E.

Experimental and Analytical Study of Vane Pump Inefficiencies

Senior Honors Project

Brian E. Tucker
2117 Andy Holt Avenue 707
Knoxville, TN 37916

Submitted in partial fulfillment of the degree of
Bachelors of Science in Mechanical Engineering
under the University of Tennessee
Honors Program

May 8, 1995

Faculty Mentor: Dr. Frank H. Speckhart, P.E.

Experimental and Analytical Study of Vane Pump Inefficiencies

Senior Honors Project

Brian E. Tucker
2117 Andy Holt Avenue 707
Knoxville, TN 37916

Submitted in partial fulfillment of the degree of
Bachelors of Science in Mechanical Engineering
under the University of Tennessee
Honors Program

May 8, 1995

Faculty Mentor: Dr. Frank H. Speckhart, P.E.

2117 Andy Holt Avenue 707
Knoxville, TN 37916
May 8, 1995

Dr. Frank H. Speckhart
Department of Mechanical and Aerospace Engineering
414 Dougherty Hall
Knoxville, TN 37996-2210

Dr. Speckhart:

Enclosed is the final draft of my senior honors project entitled "Experimental and Analytical Study of Vane Pump Inefficiencies." Thank you for your input and I hope that final form of this study meets to your approval. I am also forwarding a copy of this report to the University Honors office in Melrose Hall.

Thank you once again for your guidance and support during this project. I hope I may be of assistance in the future in further cooperative endeavors during my graduate study at the University of Tennessee.

Sincerely,

Brian E. Tucker

Summary

The purpose of the study is to investigate the performance and efficiency of a small vane pump used to inflate automotive power lumbar supports. The pump used is manufactured by ACI in Dandridge, TN. The accomplishment of this goal through theoretical and experimental means leads directly to the second goal: proposal of changes to the pump based upon theory as well as experimental validation. An emphasis was placed upon producing practical and economical changes to the pump.

Theoretical studies into the possible changes in the pump began with investigations into cost-effectiveness of modifications. Many changes were eliminated due to cost and complexity. Then, the final decisions on pump changes were made based upon predicted outcome from thermodynamic and fluid-flow relations. Expressions determining geometric properties of the pump are also derived.

The pump was tested using a large, rigid tank to prevent any changes in volume. The pump was tested in three configurations: First, with not modifications, second, with an enlarged supply line (4mm diameter vs. 2mm) and third, with the enlarged supply line and an enlarged outlet bore diameter (3.5 vs. 2.8 mm).

Results show an increase of efficiency of 5% at 2 psi for the enlarged supply line with an additional 1% gain with increase outlet bore diameter. However, the peak pressure was reduced by enlarging the outlet bore diameter. Power-specific pressure (psig/hp input) was increase by 5 and 12% for the two successive modifications. Results also demonstrated a linear relationship between mass flow and efficiency (i.e., the efficiency increased with increasing mass flow rate).

Final recommendations as to changes in the pump system are made along with recommendations for future experimentation.

Table of Contents

I. Introduction **1**
- A. Objective 1
- B. Method of Attack 1
- C. Scope 1
- D. Background 2

II. Theoretical Study **7**

III. Equipment and Procedure **9**
- A. Modeling of Physical System 11
- B. Experimental Procedure 12
- C. Analytical Procedure 13

IV. Results and Discussion of Results **14**

V. Conclusions **24**

VI. Recommendations **25**

References **27**

Appendix A: Original Data Sheets **28**

Appendix B: Data Reduction **33**

Appendix C: Sample Calculations **38**

Figures:

Figure 1: Pump Parameter Definition 3
Figure 2: Type I Pump Schematic 3
Figure 3: Rotor Stator Arrangement 4
Figure 4: Rotor Cell Volumes and Pressures 4
Figure 5: Experimental Apparatus 9
Figure 6: Pump Efficiency as a Function of Tank Pressure 15
Figure 7: Input Power to Pump as a Function of Time 16
Figure 8: Tank Pressure a Function of Time 17
Figure 9: Power-specific Pressure as a Function of Time 18
Figure 10: Mass Flow Rate of Pump as a Function of Time 19
Figure 11: Efficiency as a Function of Time 20
Figure 12: Efficiency as a Function of Pump Mass Flow Rate 22
Figure 13: Efficiency as a Function of Pump Mass Flow Rate (detail) 23

I. Introduction

A. Objective

The purpose of this study is to investigate the performance and efficiency of a small vane pump used to inflate automotive power lumbar supports. The accomplishment of this goal through theoretical and experimental means leads directly to the second goal: proposal of changes to the pump based upon theory as well as experimental validation.

B. Method of Attack

Extensive physical modeling provided insight into the operation of the pump. In fact, this theoretical analysis provided the impetus to complete the second goal of changes in the pump itself. This analysis focused first upon a review of the available literature describing vane pumps and pumps in general. Along with pump-specific investigation, the general areas of interest in the fluid and thermal sciences were also required. From sufficient knowledge gained from these two areas, the total pump system could be analyzed and potential changes suggested. The criteria for making these changes, however, was not simply limited to the betterment of the pump performance: any change made in the pump system had to also be economically justifiable in mass production. This criterion ensures a useful, practical solution. Once the changes have been proposed, they can be made to the pump itself and then tested experimentally in an apparatus similar to the actual system. The results of each change, made sequentially, can then be analyzed to determine what effect each change has upon the pump's performance and efficiency.

C. Scope

The pump used in this experiment is manufactured by American Components Incorporated (ACI) in Dandridge, TN. It's current sole use involves the inflation of power lumbar supports in automotive seats for domestic auto manufacturers. While the results of the analysis contained in this study are often non-pump specific (i.e., the analysis techniques can be used for any vane pump), the numerical results solely represent the pump used.

D. Background

i. Pumps (general)

Pumps are defined as devices designed to move or change the pressure of a fluid. These devices can be classified into two categories: rotodynamic (dynamic) and positive displacement (White 633). Rotodynamic pumps rely upon turbomachinery to increase the velocity of the impinging fluid and thus increase the pressure. When a rotodynamic pump is turned off, the pressure on both sides of the pump will equalize. Examples include centrifugal compressors and axial fans. Positive displacement pumps, on the other hand, rely upon the compression of the fluid by means of constriction of physical boundaries. This constriction decreases the volume which the fluid occupies and thus increases the pressure. A piston-cylinder device is a typical example of a positive displacement pump. It is this later category which contains the specific type of pump in question: the sliding-vane, or simply vane, pump.

ii. Vane pump

At the heart of the vane pump lies a rotor of radius r1 in which the vanes slide, as shown in Figure 1. The vanes impinge upon a stator of inner radius r2. The centers of the stator and rotor are offset by an eccentricity, defined as e. Figure 2 shows, in schematic, the pump used in this experiment. Here, the vanes, stator, and rotor are clearly labeled. Figures 3 and 4 (from Rudge 160,162) provide greater insight into the pumps induction and exhaust processes. Figure 3 shows a typical commercial vane pump in top view with stator, or side, inlet and outlet ports (it should be noted here that the pump used in this experiment, though similar in concept, uses top-mounted inlet and outlet ports). Figure 4 demonstrates the shrinking-volume concept of the positive displacement vane pump: the cell volume enclosed by vanes on either side and between the stator and rotor decreases as shown by the polar diagram of rotor cell volume from the intake to outlet port.

iii. Pump system

The vane pumps in this experiment are used in power lumbar supports in automotive applications. The pump is attached via a line to a bladder inside the seat. In general, these bladders are located in the lower-back area of the car seat. Because the vanes in these small pumps are held against the stator wall by centrifugal force when the pump is operating, a valve in the system is necessary to keep the flow from flowing back through the pump when it is not spinning.

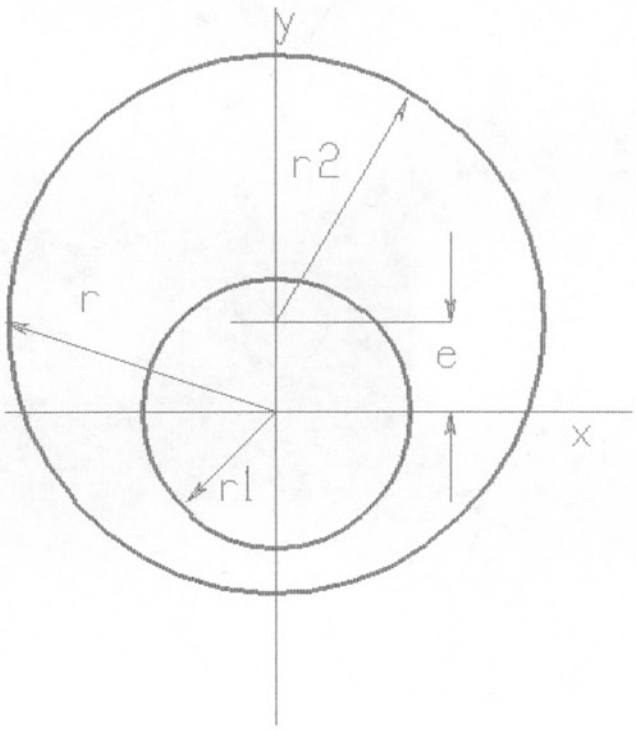

FIGURE 1: PUMP PARAMETER DEFINITION

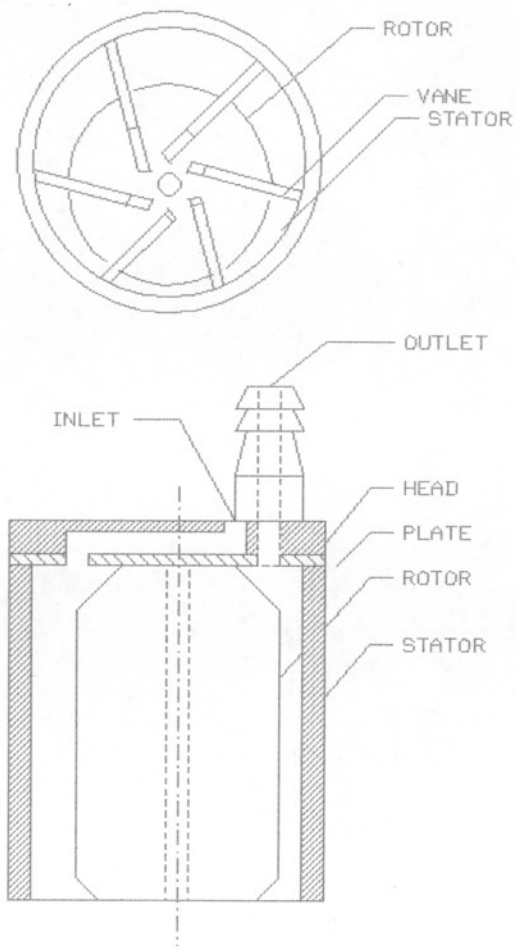

FIGURE 2: TYPE I PUMP SCHEMATIC

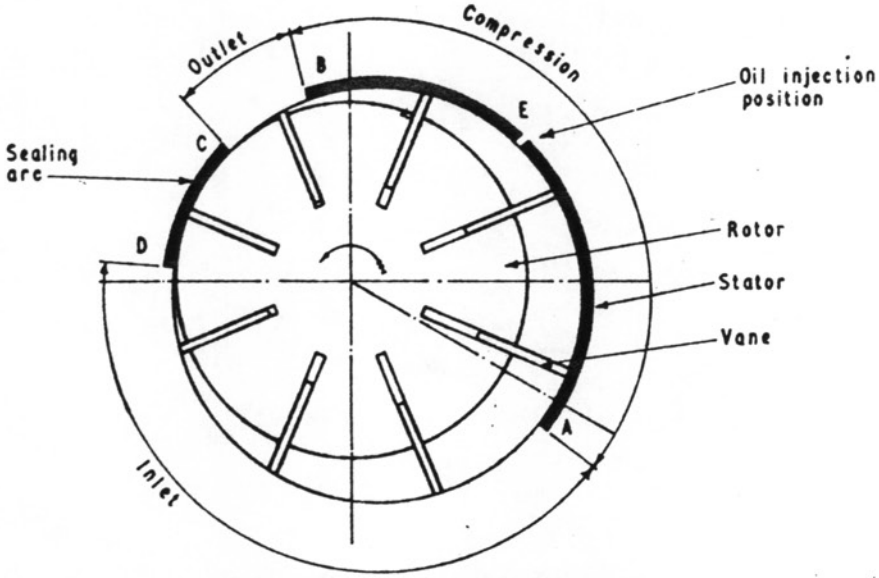

Figure 3: **Rotor–stator arrangement**

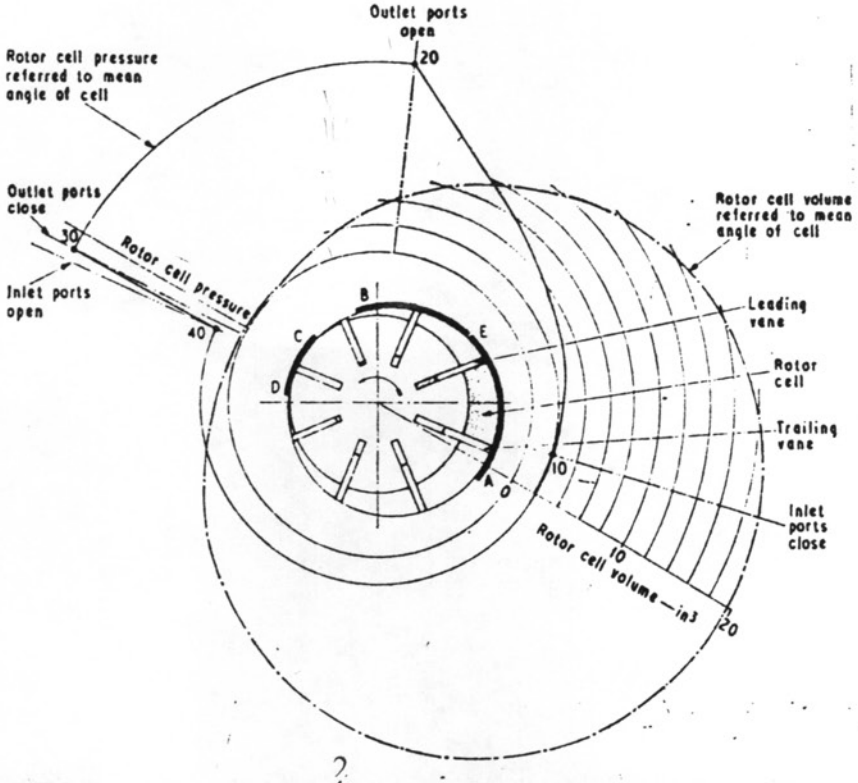

Figure 4: **Polar diagram of rotor cell volumes and simplified polar diagram of rotor cell pressures**

The pump used in this study consists of plastic rotor and vanes with a steel stator and top plate (see Figure 2). The thin, steel stator casing is surrounded by a plastic shell. The vanes are rectangular in shape and thus easy to manufacture. The steel casing and plate are required to reduce friction on the upper and lower contact surfaces with the rotor. The rotor is chamfered on the top and bottom and slotted to allow the vanes to slide easily.

iv. Other considerations

As previously mentioned, fluid-flow and thermodynamic considerations are also important to consider in the analysis of the pump. On key area in which many losses in the pump system occur is the piping from the pump itself to the delivery area. The Darcy-Weisbach equation (White 336) shows that for a pipe of length L and diameter d

$$h_f = f\frac{LV^2}{d2g} \tag{1}$$

where h_f is the friction head, f is the Darcy Friction Factor (which is a function of Reynold's number and the pipe roughness), V is the velocity of the fluid, and g is the acceleration of gravity. From this relation, it can be ascertained that the losses due to friction are inversely proportional to the diameter of the pipe. Also not so obvious is the fact that the diameter plays a weaker role through the friction factor's dependence upon Reynold's number and thus diameter. Therefore, increasing the outlet pipe/line diameter should decrease the friction losses in the pump system. This is especially important when we consider the small size of the original line.

Other losses may occur in the outlet stages of the pump itself. Any sudden changes in diameter in a line through which a fluid is flowing will constitute a further loss characterized by the equation

$$h_m = \frac{V^2}{2g}\sum K \tag{2}$$

where the factor K has modeled empirically according the ratio of diameters by

$$K \cong 0.42\left(1-\left(\frac{d}{D}\right)^2\right) \tag{3}$$

where d is the smaller diameter and D is the larger in the constriction (White 338). What this implies is that in the outlet, a diameter change does occur and by reducing this ratio of d/D through the increase of d, another source of loss should be minimized.

v. Analysis

To analyze the efficiency of the pump itself requires knowledge of the amount of work the pump exerts upon the gas being compressed. Work required to change from a volume V_1 to V_2 can be expressed as

$$W = \int_{V_1}^{V_2} p dV \tag{4}$$

where p is the pressure (Moran 33). It is the pressure, which in itself is dependent upon volume, which defines the results of this integral. Using the ideal gas model, two extreme cases can be used and compared for analysis purposes. If all the heat generated by the work done to compress the gas is dissipated and the gas stays at a constant temperature (the isothermal case), then the product of pressure and volume stays constant by the ideal gas law. Evaluating the integral in (4) produces

$$W = pV \ln\left(\frac{p_2}{p_1}\right) \tag{5}$$

The other extreme, in which none of the heat escapes (adiabatic case), the product of pressure and volume raised to ratio k of its specific heats is constant which leads to the following equation for the work (Moran 103)

$$W = \frac{p_2 V_2 - p_1 V_1}{1 - k} \tag{6}$$

It can be shown by the ideal gas law that for the case under consideration in this experiment ($V=1.069\ ft^3$, $\Delta p \approx 3$ psi) that the maximum temperature changes are so small (approximately 2.5°F) for the adiabatic assumption that little difference would then exist between using the isothermal and adiabatic assumptions. Therefore, for simplicity, the isothermal case is used for the calculation of the work output of the pump in the remainder of the study.

II. Theoretical Study

Calculation of Vane Pump Geometric Properties

A. Model 1

Assume simple eccentric circles; width of vanes negligible (see Figure 1)

e: eccentricity (distance between center of circles)

r_1: radius of rotor

r_2: radius of stator

Equation of circle (for stator)

$(x-h)^2 + (y-k)^2 = r_2^2$ {center (h,k), radius r_2}

Equation of circle (for rotor)

$(x-h)^2 + (y-k-e)^2 = r_1^2$ {center (h,k+e), radius r_1}

polar coordinates: $x=r\cos\theta$; $y=r\sin\theta$

Rotor: center =(0,0)

in rectangular coordinates:

$x^2 + y^2 = r_1^2 \Rightarrow r^2\cos^2\theta + r^2\sin^2\theta = r_1^2 \Rightarrow r=r_1$

Stator: center =(0,e)

in rectangular coordinates:

$x^2 + (y-e)^2 = r_2^2$

$x^2 + y^2 - 2ey + e^2 = r_2^2$

$r^2 - 2er\sin\theta + e^2 = r_2^2$

$r^2 - (2e\sin\theta)\, r + (e^2 - r_2^2) = 0$ {solve with the quadratic equation}

$$r = e\sin\theta\sqrt{r_2^2 - e^2\cos^2\theta} \tag{7}$$

Find area subtended by angles θ_1, θ_2 (angles referenced CCW from x axis)

$$A_{(\theta_1:\theta_2)} = \frac{1}{2}\left[\int_{\theta_1}^{\theta_2} r^2 d\theta\right] - \frac{(\theta_2-\theta_1)}{2\pi}\pi r_1^{\,2} \quad \text{(Swokowski 546)}$$

$$A_{(\theta_1:\theta_2)} = \frac{1}{2}\left[\int_{\theta_1}^{\theta_2} r^2 d\theta\right] - \frac{(\theta_2 - \theta_1)}{2} r_1^{\,2} \tag{8}$$

B. Model 2

Assume vane width non-negligible = w

Area enclosed by the vanes:

$$A_v = \frac{w}{2}\left[r(\theta_1) + r(\theta_2) - 2r_1\right]$$

Total Area enclosed (accounting for vanes)

$$A^*_{(\theta_1:\theta_2)} = A_{(\theta_1:\theta_2)} - AV = \frac{1}{2}\left[\int_{\theta_1}^{\theta_2} r^2 d\theta\right] - \frac{(\theta_2 - \theta_1)}{2} r_1^{\,2} - \frac{w}{2}\left[r(\theta_1) + r(\theta_2) - 2r_1\right] \tag{9}$$

III. Equipment

A. Apparatus: (Figure 5)

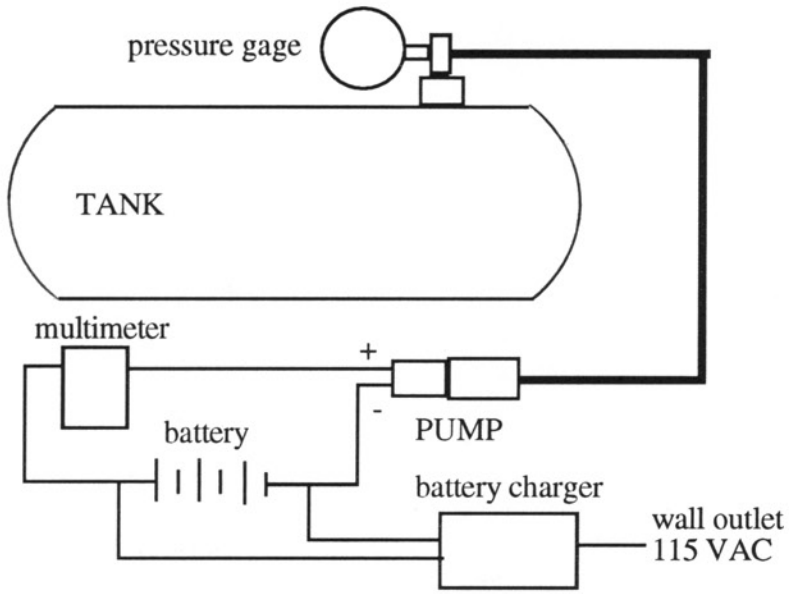

B. Equipment Description and Use

Tank: steel construction, 8 gallon US (1.069 ft^3) capacity

Pressure gage: measure the pressure of the air inside the tank

Multimeter: determine the current flowing into the pump

Battery: provide 12V power supply required to run the electric motor

Battery charger: equalize the voltage of the battery during pump operation by continuously supplying enough current to maintain battery voltage

Air line: supplies air from pump to tank (two different sizes used during testing)

OEM line: 2mm diameter, ABS plastic (2 90 degree bends)

enlarged diameter line: 4mm diameter, rubber

length (both): 52cm

Type I Pump Specifications:
(see Figure 2)
Outlet bore diameter (unmodified): 2.83mm
Outlet bore diameter (enlarged): 3.53mm
Rotor
diameter: 22.43mm
height (total) 24.88mm
top chamfer height: 5.1mm
top diameter (min): 16.9mm
bottom diameter (min): 18.1mm

Stator diameter: 27.9mm
eccentricity: 2.55mm
vane eccentricity: 2.6mm
Intake port: 0 degrees (referenced CCW from x-axis in Figure 1)
Outlet port: 165 degrees

III. Procedure

A. Modeling of Physical System

To model the physical system involved determination from theory which changes in the pump would produce positive and significant changes in pump performance. Of highest importance was the financial impact of these changes. The current pump design as shown in Figure 2 is a very simple one. Any change which would result in significantly increased manufacturing costs would diminish the pump's competitive advantage from a financial standpoint and would thus meet with extreme opposition. Keeping this in mind, the scope of possible changes was narrowed considerably.

From a cost standpoint, several prospective changes could be eliminated. First, lubrication in the system, which would reduce the friction and thus noise (a source of inefficiency), looks attractive, but implementation of any supplied lubrication system would be difficult at best. Using a simple liquid lubricant (WD-40) did reduce noise and thus pump friction in testing of the Type I pump, but the lubricant quickly evaporated. No simple, much less inexpensive, solution exists in the answering of the lubrication question. Changing of the geometry of the rotor and vane also proved impossible due to the lack of facilities in which to manufacture comparable parts.

However, changes in the induction and exhaust processes could easily be implemented. All of the induction and exhaust routing was accomplished through the head of the pump, which is an interchangeable item. Thus, changes could be made to the head and different heads could be tested using the same pump and the results compared.

Induction routing in the head involved long, narrow, and twisting passageways. According to Dr. M. Parang, it is likely that these passageways are used to stagnate the incoming flow in an attempt to produce laminar inlet flow. Realizing the potentially harmful effects of producing turbulent flow in the pump inlet, the induction routing was skipped as a candidate for pump changes.

Finally, changes in the exhaust process were considered. As previously mentioned, changes in the outlet line and outlet bore would be beneficial to the performance of the pump. Also, these changes in the pump would not be expensive to implement. Thus, both changes were approved for use in the experimental testing of the pumps so that their usefulness might be ascertained.

B. Experimental Procedure

i. Choice of Equipment

To test the changes made to the pump, a large, rigid tank served the purpose of modeling the actual physical system. The tank was chosen for several reasons. First, the rigid walls ensured a constant volume during the testing. An actual bladder used in the power lumbar system undergoes an inflation process in which the volume of the bladder changes. Because of the difficulties associated with the measurement of this changing volume, the rigid tank was chosen. The large size of the tank enabled measurements to be taken by hand accurately over longer spans of time owing to the fact that achieving operating pressures required longer amounts of time due to the large volume of the tank relative to an actual bladder. A smaller tank would have reached peaked pressure much more quickly requiring measurements to be taken at a much higher rate (perhaps making it impossible to take readings by hand).

ii. Conducting the Experiment

To test the basic pump configuration and verify the experimental soundness of the apparatus and the procedure, a Type III pump (not analyzed in this study) was used. The test of this pump, labeled Test 1, involved the same basic steps which were to be used in all pump tests. The pump was attached to the tank via a line and then attached to the tank fitting with a section of rubber hose. All connections were tested to ensure that no leaks had occurred by compressing the air in the tank and then blocking off the line. If the pressure in the tank as measured by the pressure gage did not decrease, no leaks were present in the system. Next, the pump power supply was hooked up allowing for the multimeter to be wired in series to measure current into the motor. In all but test 1, a standard battery charger was also used to ensure that battery voltage would not decrease as the pumps slowly drained the battery (in test 1, the voltages were measured over time). Then, the power circuit with the battery was completed and the stopwatch was started. Readings of pressure and current were taken every thirty seconds until the allotted time period of five minutes (300 seconds) had elapsed.

Test 2 involved the testing of the Type I pump for analysis purposes. Three separate tests were conducted. In Test 2a, a standard Type I pump with no modifications and an original bladder supply line was tested and used as the control. Test 2b involved only changing the supply line from the standard to larger size. Test 2c then added to the enlarged supply line an enlarged outlet diameter. Each test was carried out sequentially using the same pump (though with different pump heads; the

Test 2c head came from a similar pump with the aforementioned outlet diameter change). Between tests, the motor unit on the pump was allowed to cool down. Then, the no-load current could be checked to ensure that each pump would start at the same initial condition.

C. Analysis Procedure

The isothermal case assumptions were used in the analysis of the output power of the pump. The power was calculated using the isothermal work equation (5) and the ideal gas model. Input power was calculated by simply taking the product of the pump current and battery voltage. The details of these calculations are outlined in the sample calculations.

IV. Results and Discussion of Results

The testing of the Type I pump produced several positive changes in the performance of the pump. Figure 6 shows the efficiency (isothermal) of each of the pumps (2a, 2b, 2c) as a function of tank pressure. Pumps 2b and 2c each showed increased efficiency (almost 5% for each at 2 psi) versus 2a while achieving higher overall pressures. The largest change, as is evident from the figure, came from the use of the larger outlet line. The difference between the outlet line and the outlet line with the enlarged outlet bore amounts to about 1% over most of the range. However, the efficiency of 2c actually drops below 2b above 2.5 psig. While not predicted, this decrease in efficiency comes from a decrease in the rate of change of pressure (see Figure 8) which is the result of less restriction in the outlet. In other words, changes in outlet diameter do increase the efficiency of the pump at lower pressures, but increasing the outlet diameter means paying a price in terms of peak pressure.

Figure 7 provides further comparison as to the effect of the change in 2b and 2c. Both show an increased power consumption (input power) over the time of the experiment versus the unmodified 2a. In fact, 2b shows a consistent 0.0075 hp interval between itself and 2a. Once again, though, 2b and 2c switch places; after 100 seconds, 2c power consumption starts to decrease until it almost reached the level of 2a at the end of the test. This seems to indicate that as a pump reaches its maximum pressure (this assumption that 2c has reached maximum pressure in validated in Figure 8), its power will decrease to a minimum value. This is a reasonable conclusion considering the fact that maintaining tank pressure should require less power than a transient situation and that this power should stay at a constant level.

Because of the increased power required by the modified pumps to produce the higher pressures and efficiencies, a study into the power-specific pressure is necessary. Figure 9 shows that, even though they require more power, pumps 2b and 2c actually use less power per increase in pressure (or conversely, deliver more specific pressure). This further supports the claim of better pump performance. Pump 2b showed a 5 % average increase in specific pressure while 2c delivered over 12% greater specific pressure relative to 2a.

Figures 10 and 11 do, however, but a time-based perspective onto these results. While pumps 2b and 2c do show an advantage in both mass flow rate and efficiency, the large-margin advantages in both areas are short-lived. After the first 60 seconds of the test, both the mass flow and efficiency have settled down to near-identical values. It is important, however, to note that at these times each pump was delivering a

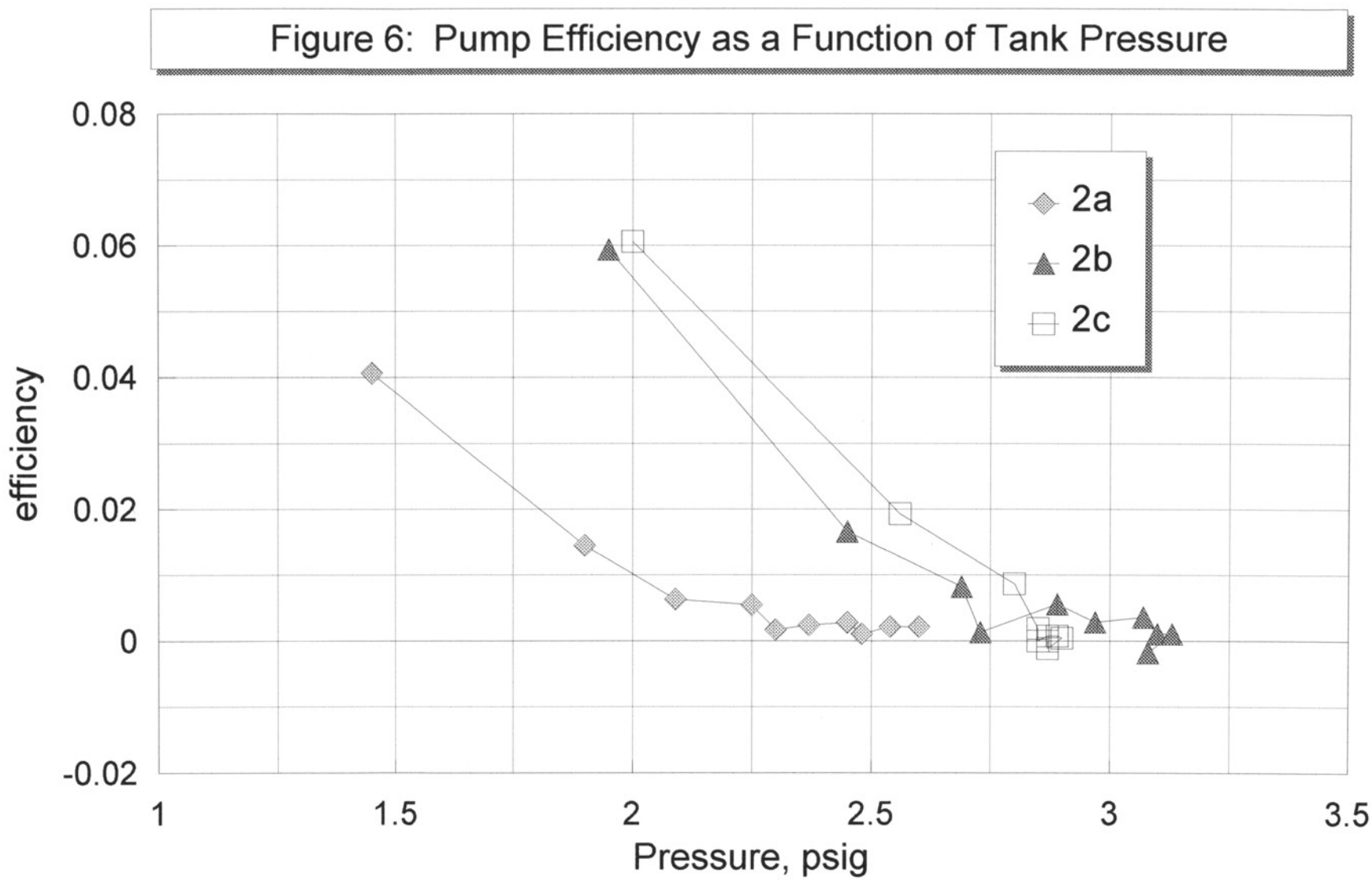
Figure 6: Pump Efficiency as a Function of Tank Pressure
0.08
0.06
0.04
0.02
0
-0.02
efficiency
1
1.5
2
2.5
3
3.5
Pressure, psig
2a
2b
2c

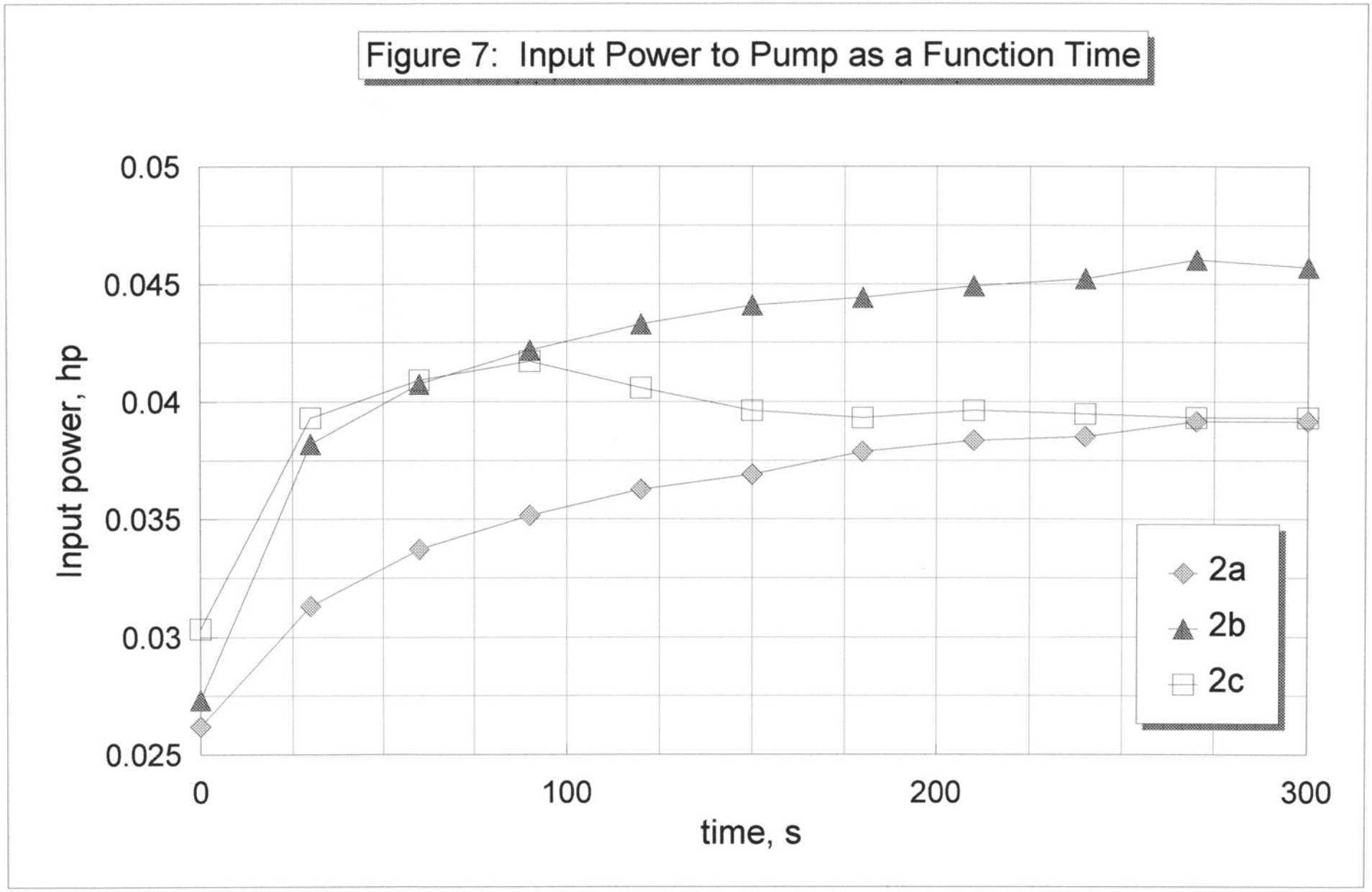
Figure 7: Input Power to Pump as a Function Time
0.05
0.045
0.04
0.035
0.03
0.025
Input power, hp
0
100
200
300
time, s
2a
2b
2c

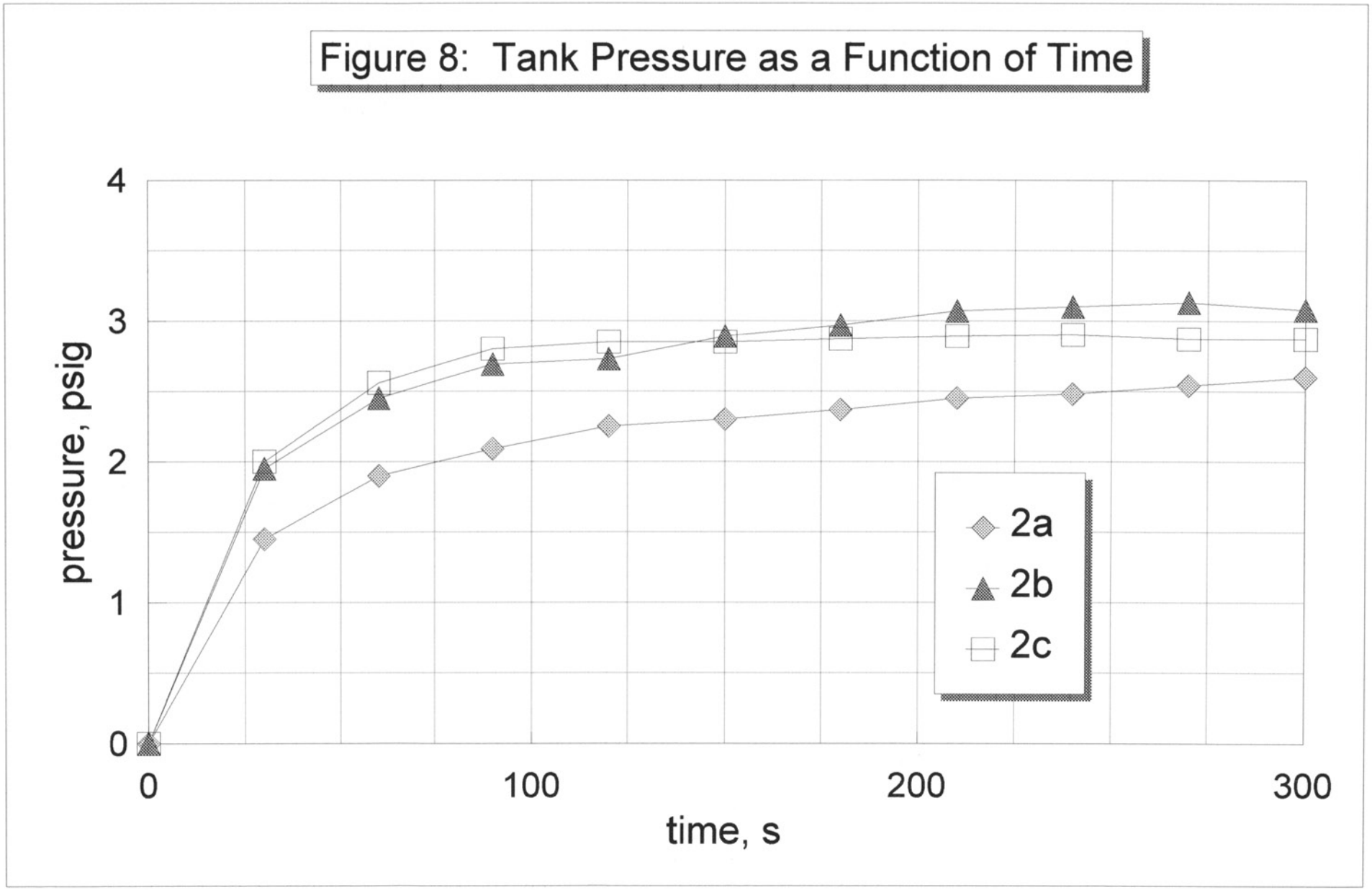
Figure 8: Tank Pressure as a Function of Time
pressure, psig
0
1
2
3
4
0
100
200
300
time, s
2a
2b
2c

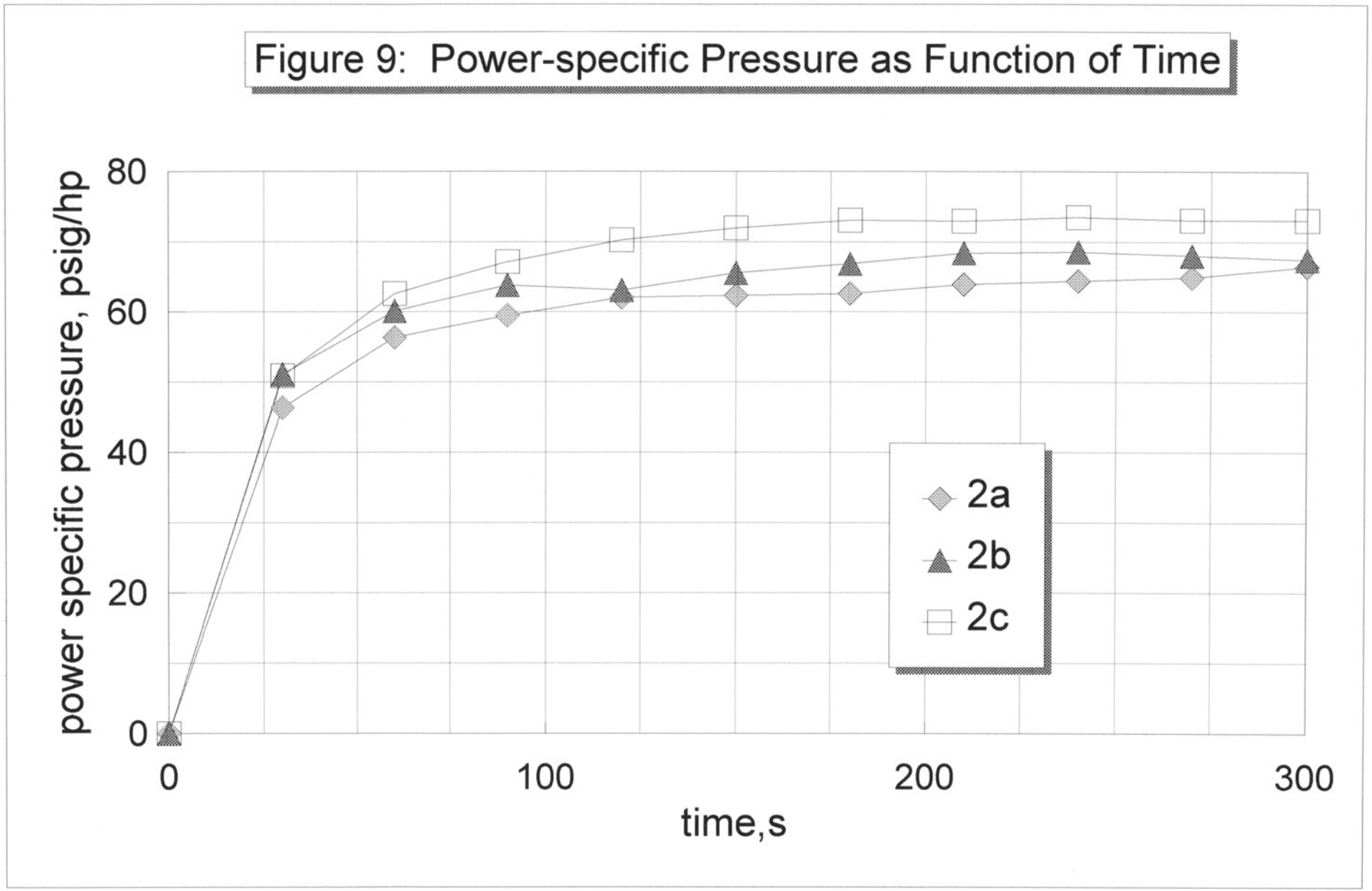
Figure 9: Power-specific Pressure as Function of Time
power specific pressure, psig/hp
80
60
40
20
0
0
100
200
300
time,s
2a
2b
2c

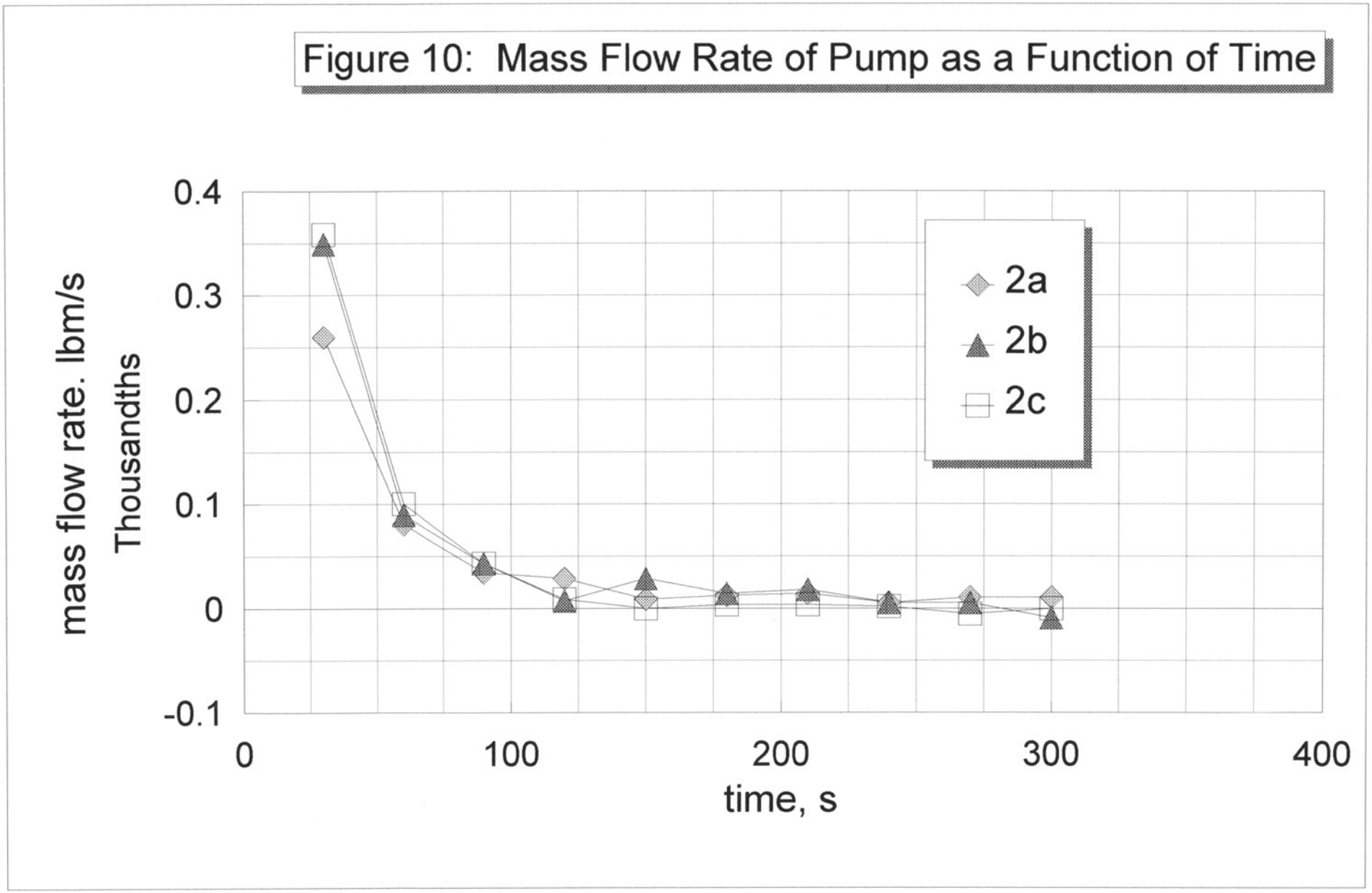
Figure 10: Mass Flow Rate of Pump as a Function of Time
mass flow rate. lbm/s
Thousandths
0.4
0.3
0.2
0.1
0
-0.1
0
100
200
300
400
time, s
2a
2b
2c

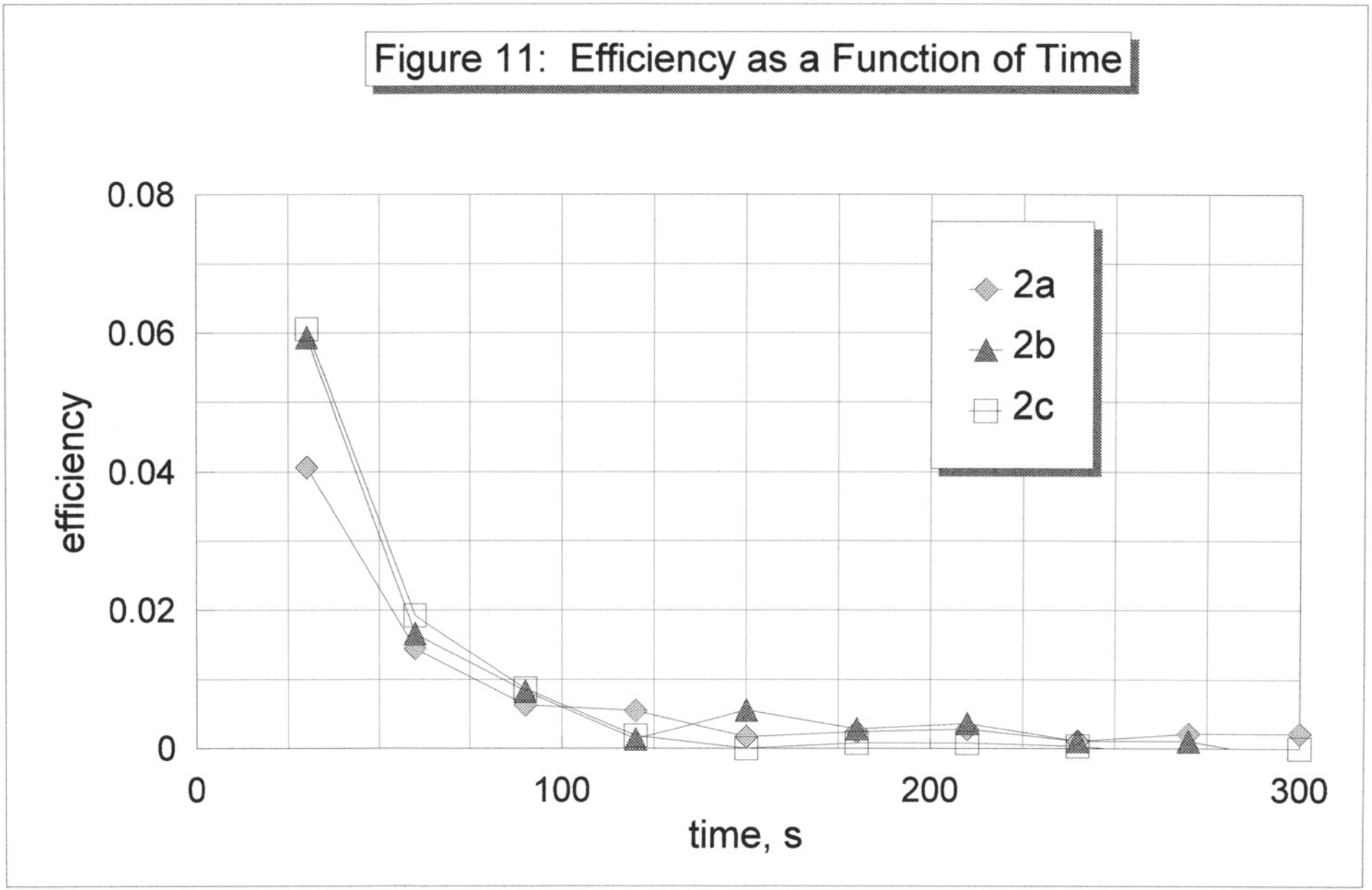
Figure 11: Efficiency as a Function of Time
0.08
0.06
0.04
0.02
0
efficiency
0
100
200
300
time, s
2a
2b
2c

different pressure. The significance of this result stems from the fact that, in general, the pumps are used for short periods of time (tested times of up to 4 seconds to reach maximum pressure in a typical bladder) to inflate lumbar support bladders.

Figures 12 and 13 demonstrate an unusual property of vane pumps: the efficiency of the pump increases linearly with the mass flow rate. As shown over the full range in Figure 12 as well as in detail in Figure 13, this behavior is relatively insensitive to changes made in the exhaust process. Therefore, the goal of increasing the efficiency of any vane pump could be realized by increasing the mass flow rate of the pump.

Originally, plans were made to calculate the theoretical compression ratio based upon the geometry of the pump using equation (9). However, an initial analysis of the pump showed that from a geometric point of the view the compression ratio should be at or below 1. This is inconsistent with the experimental data which shows a pressure increase to 3 psia or a pressure ratio of about 1.2. The offset of the vanes themselves (their axes do not intersect in the center of the rotor) does differ from the geometric model and may account for some of the effects. Also, the fact that the maximum pressure changed with the outlet bore diameter proves that more complex geometric and fluid effects are present than the simple geometric model can predict.

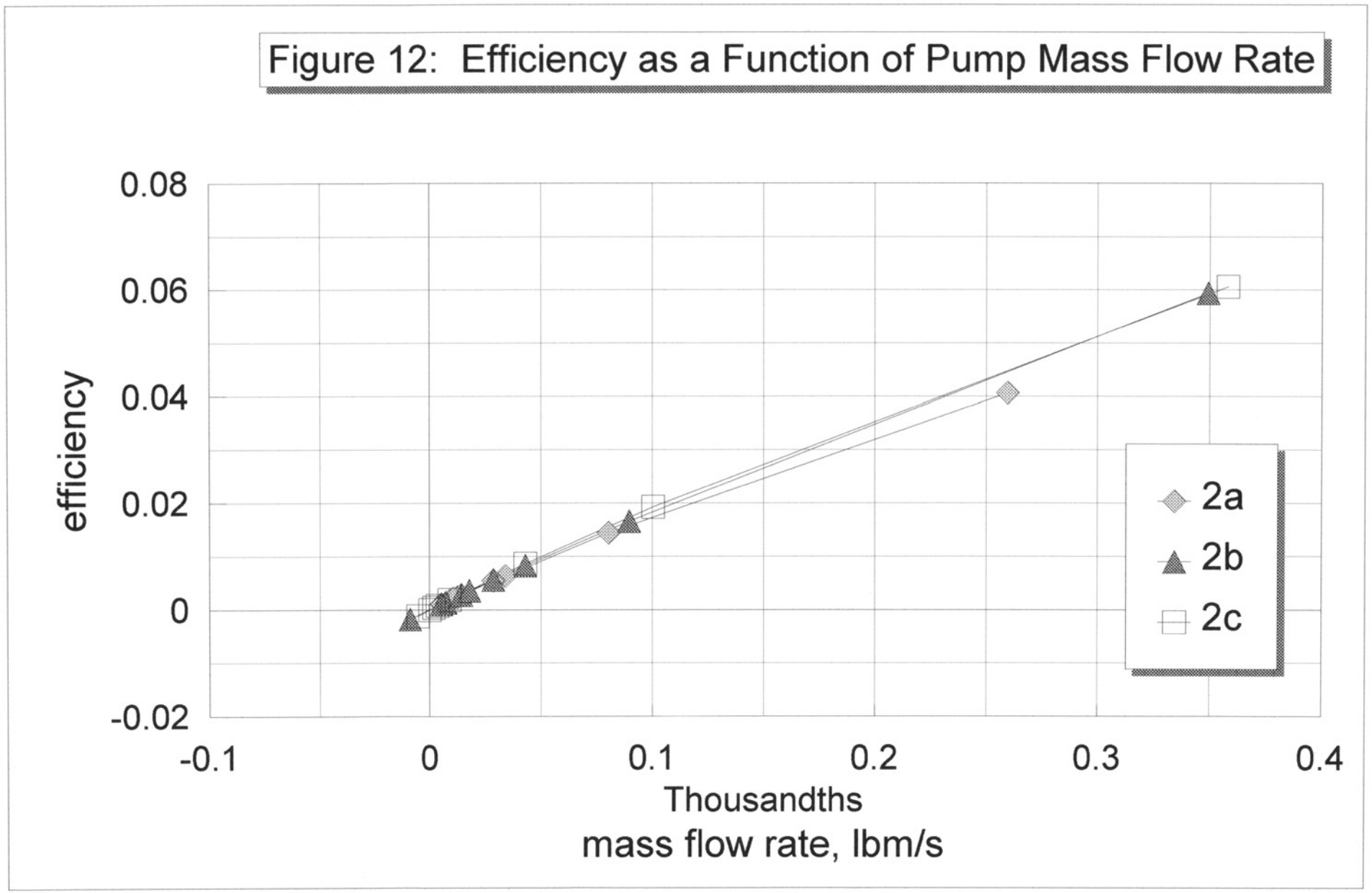
Figure 12: Efficiency as a Function of Pump Mass Flow Rate
0.08
0.06
0.04
0.02
0
-0.02
efficiency
-0.1
0
0.1
0.2
0.3
0.4
Thousandths
mass flow rate, lbm/s
2a
2b
2c

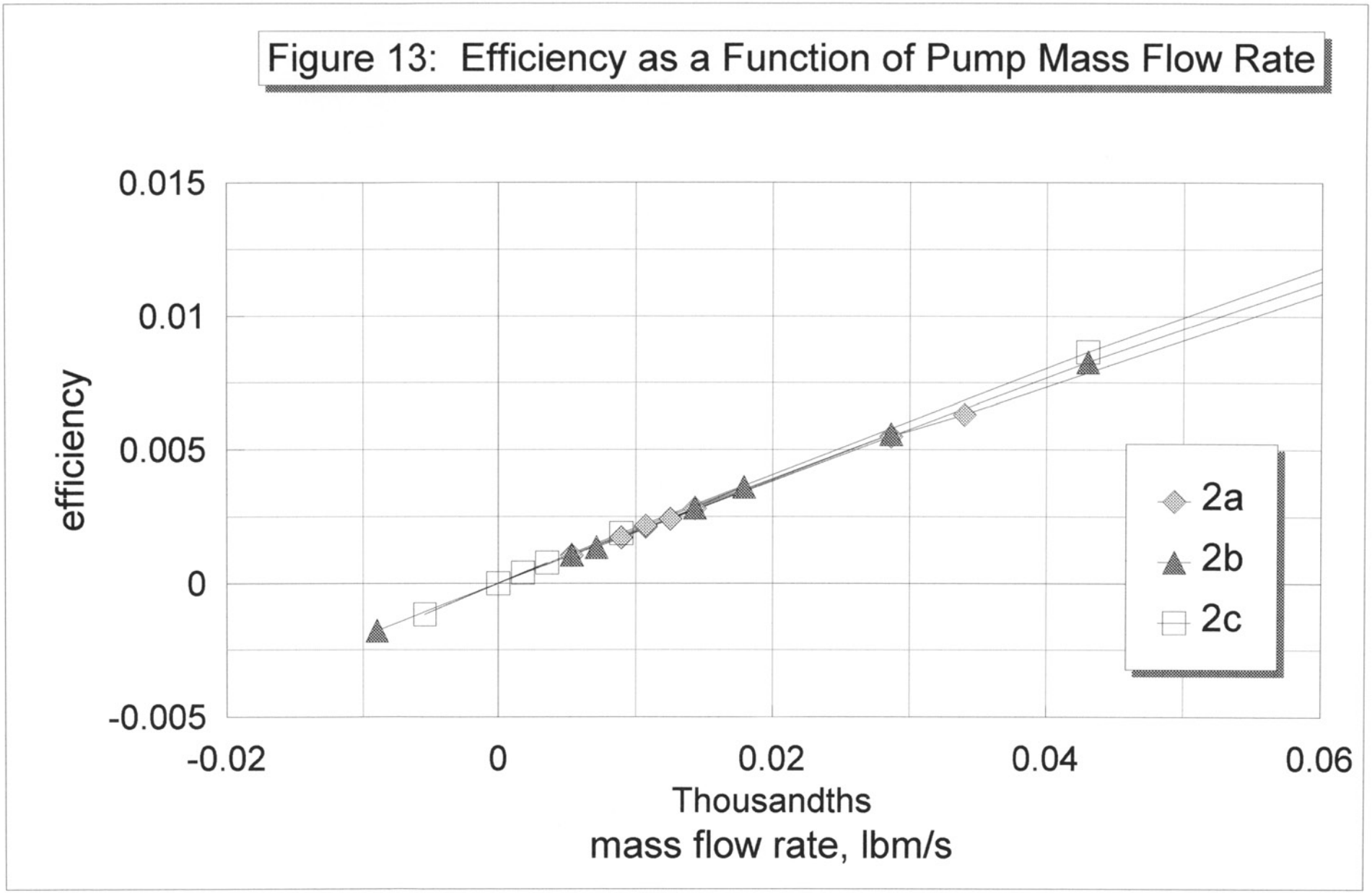
Figure 13: Efficiency as a Function of Pump Mass Flow Rate
0.015
0.01
0.005
0
-0.005
efficiency
-0.02
0
0.02
0.04
0.06
Thousandths
mass flow rate, lbm/s
2a
2b
2c

V. Conclusions

It has been shown that increasing the supply line diameter will increase the efficiency of a vane pump by significant amounts (measured up to 5%). This difference is especially evident at low pressures; the advantage decreases with increasing pressure. Increasing the outlet bore diameter can also increase the efficiency by up to 1% over only increasing the outlet line size, but this increase incurs the penalty of lowering the maximum pressure which the pump can deliver. This also decreases its efficiency versus the enlarged outlet diameter-only modification at higher pressures.

It has also been demonstrated that the changes made in pump configuration provide greater pressure delivery per input power by over 5% (average) by only increasing the supply line diameter and by over 12% (average) by also adding an enlarged outlet bore diameter.

These efficiency advantages are, however, short-lived and occur in the first 60 seconds of the tests. Advantages in both efficiency and mass flow rate dwindle as time increased during the test.

Vane pumps can be characterized as having a linear relationship between mass flow rate and efficiency. Increasing mass flow rate will linearly increase the efficiency of the pump.

VI. Recommendations

A. Recommendations for Pump System

Due to the increased efficiency and higher pressure delivery rates, the changes made to the pumps could be used to improve the existing pump design. The bore diameter used is within the range of physical constraints while the new supply line hose is of standard size and material. Therefore, both changes are cost-effective, and they will increase the performance of the pump.

B. Experimental Recommendations

While the results of this study are illuminating, several opportunities exist to better the analysis and several new questions have been raised. Since much of the difference between the modified and unmodified pumps occurred in the early part of the experiment (the first 60 seconds), further testing using shorter time periods could better quantify the advantages of the changes. To further quantify the effects of bore diameter upon peak pressure and efficiency, several values of bore diameter should be tested. Also, a large opportunity exists to determine how the exhaust bore diameter affects the compression ratio of the pump through geometric modeling and further experimentation. Also, while it was originally passed over, changes in the intake port geometry could also be investigated to determine ways to increase mass flow rate and thus efficiency.

References

White, Frank M. *Fluid Mechanics* 2nd Ed. New York, McGraw-Hill Incorporated, 1986

Moran, Michael J. and Shapiro, Howard N. *Fundamentals of Engineering Thermodynamics* 2nd Ed. New York, John Wiley and Sons, 1992

Rudge, P. J. and Smith, D. G. "Pressure-Volume Diagrams for Sliding Vane Rotary Compressors" *The Institution of Mechanical Engineers Proceedings 1969-1970, Volume 184, Part 3R*, London, 1970

Appendix A: Original Data Sheets

Senior Project
Brian E. Tucker

DATA SHEET

Experiment Description: Standard set-up, no battery charger
Pump: Type 3
Date: 3-1-95

Tank Volume: 8 gallon
Total time of experiment: 5 minutes
Notes:

Battery Voltage (no load): 12.16V
Under load
Varies → 12.05 →

TIME, S	PRESSURE, PSIG		CURRENT, A
30	2.45	11.94	1.780
60	4.15	11.91	2.424
90	5.65	11.90	2.439
120	7.05	11.88	2.520
150	8.05		2.959
180	9.10		3.154
210	10.00		3.346
240	10.80		3.487
270	11.50		3.625
300	12.10		3.770

No load current ~ 1.385A

EQUIPMENT:

Multimeter

METEX M-4650
UT ID 455610
L.C. 0.001A Max 20A

Pressure Gauge

Range 15 psig
LC 0.05 psig

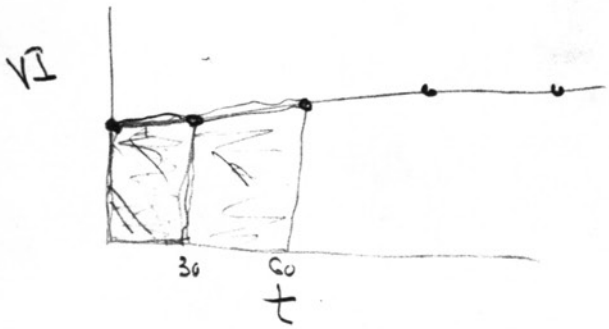

Senior Project
Brian E. Tucker

Experiment Description:
Pump: TYPE I - No modifications ; standard outlet line
Date: APRIL 19, 1995

Tank Volume: 8 gallons US
Total time of experiment: 300 s
Notes: Using std. pump, line
battery charger attached.

TIME, S	PRESSURE, PSIG	CURRENT, A
0	0	1.64
30	1.45	1.96
60	1.90	2.11
90	2.09	2.20
120	2.25	2.27
150	2.30	2.31
180	2.37	2.37
210	2.45	2.40
240	2.48	2.41
270	2.54	2.45
300	2.60	2.45

No load Current:
1.64A

Senior Project
Brian E. Tucker

Experiment Description:
Pump: TYPE I - No modifications; large outlet line
Date: APRIL 10, 1995

Tank Volume: 8 gallons US
Total time of experiment: 300 s
Notes: Using standard pump; larger line
battery charger attached.

TIME, S	PRESSURE, PSIG	CURRENT, A
0	0	1.71
30	1.95	2.39
60	2.45	2.55
90	2.69	2.64
120	2.73	2.71
150	2.89	2.76
180	2.97	2.78
210	3.07	2.81
240	3.10	2.83
270	3.13	2.88
300	3.08	2.86

No load current: 1.71

Senior Project
Brian E. Tucker

Experiment Description:
Pump: TYPE I - ENLARGED OUTLET (~ 9/64"); large outlet line
Date: APRIL 19, 1995

Tank Volume: 8 gallons US
Total time of experiment: 300 s
Notes: Using modified pump, large line
battery charger attached.

TIME, S	PRESSURE, PSIG	CURRENT, A
0	0	1.90
30	2.00	2.46
60	2.56	2.56
90	2.80	2.61
120	2.85	2.54
150	2.85	2.48
180	2.87	2.46
210	2.89	2.48
240	2.90	2.47
270	2.87	2.46
300	2.87	2.46

No load current:
1.89

Appendix B: Data Reduction

Senior Project
Brian E. Tucker

Constants:				
Volume:	8	gallons	1.06944	ft^3
Temp.	77	deg F	537	deg R
R	53.35			

Pump Test #1: Type III, no modifications (without battery charger) Date: 3-1-95

sec time	psig pressure	current A	voltage V	isentropic work ft-lb/lbm	delivered mass lbm (net)	P out hp	Pin hp	efficiency isentropic	lbm/s mass flow
0	0	1.385	11.96	*	0				0
30	2.45	1.78	11.94	4416.255	0.01317	0.003525	0.02849	0.123726	0.000439
60	4.15	2.124	11.91	2707.748	0.022308	0.003661	0.03391	0.107958	0.000305
90	5.65	2.439	11.9	2193.593	0.030371	0.004038	0.038906	0.103779	0.000269
120	7.05	2.72	11.88	1906.096	0.037897	0.004378	0.043316	0.101068	0.000251
150	8.05	2.959	11.86	1287.81	0.043272	0.003377	0.047043	0.071793	0.000179
180	9.1	3.154	11.85	1292.653	0.048916	0.003832	0.0501	0.076491	0.000188
210	10	3.346	11.83	1063.382	0.053754	0.003464	0.053061	0.06529	0.000161
240	10.8	3.487	11.81	913.1913	0.058054	0.003213	0.055203	0.058203	0.000143
270	11.5	3.622	11.79	775.841	0.061817	0.002907	0.057243	0.050778	0.000125
300	12.1	3.77	11.77	648.6832	0.065042	0.002557	0.059481	0.04299	0.000108

Pump Test #2: Type II, no modifications Date: 4-19-95

sec time	psig pressure	current A	voltage V	isentropic work ft-lb/lbm	delivered mass lbm	P out hp	P in hp	efficiency isentropic	lbm/s mass flow
0	0	1.64	11.92	0	0	***	0.026205	***	0
30	1.45	1.96	11.92	2695.08	0.007794	0.001273	0.031318	0.040651	0.00026
60	1.9	2.11	11.92	787.3489	0.010213	0.000487	0.033715	0.014455	0.000081
90	2.09	2.2	11.92	326.0473	0.011235	0.000222	0.035153	0.006315	0.000034
120	2.25	2.27	11.92	271.717	0.012095	0.000199	0.036271	0.005491	0.000029
150	2.3	2.31	11.92	84.38578	0.012363	0.000063	0.03691	0.001713	9.0E-06
180	2.37	2.37	11.92	117.7241	0.01274	0.000091	0.037869	0.0024	0.000013
210	2.45	2.4	11.92	133.9521	0.01317	0.000107	0.038349	0.002788	0.000014
240	2.48	2.41	11.92	50.071	0.013331	0.00004	0.038508	0.001051	5.4E-06
270	2.54	2.45	11.92	99.88023	0.013653	0.000083	0.039147	0.002111	0.000011
300	2.6	2.45	11.92	99.53322	0.013976	0.000084	0.039147	0.002154	0.000011

Pump Test #2: Type II, no modifications; large outlet line Date: 4-19-95

sec time	psig pressure	current A	voltage V	isentropic work ft-lb/lbm	delivered mass lbm	P out hp	P in hp	efficiency isentropic	lbm/s mass flow
0	0	1.71	11.92	0	0	***	0.027323	***	0
30	1.95	2.39	11.92	3568.591	0.010482	0.002267	0.038189	0.059364	0.000349
60	2.45	2.55	11.92	847.6639	0.01317	0.000677	0.040745	0.016605	0.00009
90	2.69	2.64	11.92	398.1389	0.01446	0.000349	0.042183	0.008271	0.000043
120	2.73	2.71	11.92	65.82186	0.014675	0.000059	0.043302	0.001352	7.2E-06
150	2.89	2.76	11.92	261.7855	0.015535	0.000246	0.044101	0.005589	0.000029
180	2.97	2.78	11.92	130.0011	0.015965	0.000126	0.04442	0.002832	0.000014
210	3.07	2.81	11.92	161.6762	0.016502	0.000162	0.0449	0.003601	0.000018
240	3.1	2.83	11.92	48.32548	0.016664	0.000049	0.045219	0.001079	5.4E-06
270	3.13	2.88	11.92	48.2441	0.016825	0.000049	0.046018	0.001069	5.4E-06
300	3.08	2.86	11.92	-80.452	0.016556	-8.1E-05	0.045699	-0.00177	-9.0E-06

Pump Test #2: Type II, enlarged outlet; large outlet line Date: 4-19-95

sec time	psig pressure	current A	voltage V	isentropic work ft-lb/lbm	delivered mass lbm	P out hp	P in hp	efficiency isentropic	lbm/s mass flow
0	0	1.9	11.92	0	0	***	0.030359	***	0
30	2	2.46	11.92	3654.495	0.010751	0.002381	0.039307	0.060577	0.000358
60	2.56	2.56	11.92	944.9274	0.013761	0.000788	0.040905	0.019266	0.0001
90	2.8	2.61	11.92	395.6189	0.015051	0.000361	0.041704	0.008653	0.000043
120	2.85	2.54	11.92	81.73743	0.01532	0.000076	0.040586	0.00187	9.0E-06
150	2.85	2.48	11.92	0	0.01532	0	0.039627	0	0
180	2.87	2.46	11.92	32.62979	0.015427	0.000031	0.039307	0.000776	3.6E-06
210	2.89	2.48	11.92	32.59267	0.015535	0.000031	0.039627	0.000774	3.6E-06
240	2.9	2.47	11.92	16.28244	0.015589	0.000015	0.039467	0.00039	1.8E-06
270	2.87	2.46	11.92	-48.8751	0.015427	-4.6E-05	0.039307	-0.00116	-5.4E-06
300	2.87	2.46	11.92	0	0.015427	0	0.039307	0	0

Table A-1: Power-specific Pressure

	power-specific pressure, psig/hp			% increase vs. 2a	
time, s	2a	2b	2c	2b	2c
0	0	0	0	NA	NA
30	46.29931	51.06217	50.88121	10.28712	9.896271
60	56.35516	60.12962	62.58389	6.697626	11.05263
90	59.4547	63.76919	67.13981	7.256778	12.92599
120	62.03249	63.04577	70.22208	1.633456	13.2021
150	62.31297	65.53168	71.92101	5.165406	15.419
180	62.58389	66.86121	73.01454	6.834532	16.66667
210	63.88772	68.37457	72.93042	7.023023	14.15405
240	64.40168	68.55479	73.47906	6.448763	14.09495
270	64.88289	68.01652	73.01454	4.82967	12.53281
300	66.41556	67.39804	73.01454	1.47929	9.935897
			AVG:	5.765566	12.98804

	A	B	C	D	E	F	G	H	I	J	K	L
1												
2		Senior Project										
3		Brian E. Tucker										
4												
5												
6		Constants:										
7												
8		Volume:	8	gallons	+C8*0.13368	ft^3						
9		Temp.	77	deg F	460+C9	deg R						
10		R	53.35									
11												
12		Pump Test #1: Type III, no modifications (without battery charger)						Date: 3-1-95				
13						isentropic	delivered					
14		sec	psig	current	voltage	work	mass	P out	Pin	efficiency	lbm/s	CFM
15		time	pressure	A	V	ft-lb/lbm	lbm (net)	hp	hp	isentropic	mass flow	vol. flow
16		0	0	1.385	11.96	*	0				0	+K16*144*C16/($C$10*$E$9)*60
17		30	2.45	1.78	11.94	+$C$10*$E$9*@LN((14.7+C17)/(14.7+C16))	(C17)*$E$8*144/($C$10*$E$9)	+G17*F17/(B17-B16)/550	+D17*E17/746	+H17/I17	(G17-G16)/30	+K17*144*C17/($C$10*$E$9)*60
18		60	4.15	2.124	11.91	+$C$10*$E$9*@LN((14.7+C18)/(14.7+C17))	(C18)*$E$8*144/($C$10*$E$9)	+G18*F18/(B18-B17)/550	+D18*E18/746	+H18/I18	(G18-G17)/30	+K18*144*C18/($C$10*$E$9)*60
19		90	5.65	2.439	11.9	+$C$10*$E$9*@LN((14.7+C19)/(14.7+C18))	(C19)*$E$8*144/($C$10*$E$9)	+G19*F19/(B19-B18)/550	+D19*E19/746	+H19/I19	(G19-G18)/30	+K19*144*C19/($C$10*$E$9)*60
20		120	7.05	2.72	11.88	+$C$10*$E$9*@LN((14.7+C20)/(14.7+C19))	(C20)*$E$8*144/($C$10*$E$9)	+G20*F20/(B20-B19)/550	+D20*E20/746	+H20/I20	(G20-G19)/30	+K20*144*C20/($C$10*$E$9)*60
21		150	8.05	2.959	11.86	+$C$10*$E$9*@LN((14.7+C21)/(14.7+C20))	(C21)*$E$8*144/($C$10*$E$9)	+G21*F21/(B21-B20)/550	+D21*E21/746	+H21/I21	(G21-G20)/30	+K21*144*C21/($C$10*$E$9)*60
22		180	9.1	3.154	11.85	+$C$10*$E$9*@LN((14.7+C22)/(14.7+C21))	(C22)*$E$8*144/($C$10*$E$9)	+G22*F22/(B22-B21)/550	+D22*E22/746	+H22/I22	(G22-G21)/30	+K22*144*C22/($C$10*$E$9)*60
23		210	10	3.346	11.83	+$C$10*$E$9*@LN((14.7+C23)/(14.7+C22))	(C23)*$E$8*144/($C$10*$E$9)	+G23*F23/(B23-B22)/550	+D23*E23/746	+H23/I23	(G23-G22)/30	+K23*144*C23/($C$10*$E$9)*60
24		240	10.8	3.487	11.81	+$C$10*$E$9*@LN((14.7+C24)/(14.7+C23))	(C24)*$E$8*144/($C$10*$E$9)	+G24*F24/(B24-B23)/550	+D24*E24/746	+H24/I24	(G24-G23)/30	+K24*144*C24/($C$10*$E$9)*60
25		270	11.5	3.622	11.79	+$C$10*$E$9*@LN((14.7+C25)/(14.7+C24))	(C25)*$E$8*144/($C$10*$E$9)	+G25*F25/(B25-B24)/550	+D25*E25/746	+H25/I25	(G25-G24)/30	+K25*144*C25/($C$10*$E$9)*60
26		300	12.1	3.77	11.77	+$C$10*$E$9*@LN((14.7+C26)/(14.7+C25))	(C26)*$E$8*144/($C$10*$E$9)	+G26*F26/(B26-B25)/550	+D26*E26/746	+H26/I26	(G26-G25)/30	+K26*144*C26/($C$10*$E$9)*60
27												

Appendix C: Sample Calculations

Sample Calculations

Finding Pump Efficiency

$w = RT \ln(P_2/P_1) = (53.35 \text{ lbf/lbm-R})*(537R)*\ln((4.15+14.7psi)/(2.45+14.7psi) = 2707.5 \text{ ft lbf/lbm}$

$m \text{ (net)} = PV/RT = (4.15 \text{ psi})*144in^2/ft^2*1.069 \text{ ft}^3/(53.35 \text{ lbf/lbm-R})*(537R) = 0.0223 \text{ lbm}$

$W = w\ m = 60.379 \text{ ft-lbf}$

$P= 60.379 \text{ ft-lbf} / (30 \text{ s} * 550 \text{ ft-lbf/s-hp}) = 3.659E\text{-}3 \text{ hp}$

$P \text{ in} =2.124A*11.91V = 0.0253kW = 0.0339 \text{ hp}$

$\text{efficiency} = P/P \text{ in} = 3.659E\text{-}3 \text{ hp} / 0.0339 \text{ hp} = 10.79 \%$