To the Graduate Council:

I am submitting herewith a dissertation written by Ipek Çelen entitled "Phosphorus Removal from Liquid Swine Manure by Chemical Precipitation." I have examined the final electronic copy of this dissertation for form and content and recommend that it be accepted in partial fulfillment of the requirements for the degree of Doctor of Philosophy, with a major in Biosystems Engineering.

John R. Buchanan
Major Professor

We have read this dissertation and
recommend its acceptance:

D. Raj Raman

R. Bruce Robinson

Robert T. Burns

Accepted for the Council:

Anne Mayhew
Vice Chancellor and Dean of
Graduate Studies

(Original signatures are on file with official student records)

Phosphorus Removal from Liquid Swine Manure by Chemical Precipitation

A Dissertation
Presented for the
Doctor of Philosophy
Degree
The University of Tennessee, Knoxville

Ipek Çelen
May, 2006

Acknowledgements

I wish to express sincere appreciation to Dr. John R. Buchanan, my major professor, for his valuable and patient guidance and encouragement throughout the planning and accomplishment of this study. Apart from the focus he has given me in my research, I am grateful for his involvement in my studies.

My appreciation is also extended to my committee members, Dr. R. Bruce Robinson, Dr. D. Raj Raman, and Dr. Robert T. Burns for their guidance and positive suggestions they provided. I also would like to thank Wesley Wright and Craig Wagoner, Department of Biosystems Engineering and Soil Science, for their help obtaining the laboratory equipment, Bill Deane, Department of Earth and Planetary Sciences, for assistance with the X-ray diffraction analysis. Thanks are also extended to Renbin Zhou, Department of Mechanical, Aerospace and Biomedical Engineering, for his help in drawing my figures in Auto-CAD.

I am grateful to my husband Fazil Erdem for his support and patience and also my daughter Gamze Nur for her love.

I am deeply grateful to my parents and my relatives in Turkey for their love, support, ever-constant encouragement, and understanding.

Abstract

Over application of phosphorus (P) by the land application of manure from animal feeding operations is an increasing threat to surface water quality. Regulations limiting manure application rates based on P are expanding and many operators will be land limited when forced to follow these standards. The excessive loading of P onto agricultural lands is a serious environmental issue because it can be transported to surface waters where it can cause eutrophication. It has been shown that P content in swine manure can be reduced by precipitation of magnesium ammonium phosphate hexahydrate, $MgNH_4PO_4 \cdot 6H_2O$ (struvite).

In this research, the fundamental objective was to reduce the P concentration of swine wastewater by precipitation methods. This task was divided into three phases.

Phase 1 investigated the optimum pH, and the molar ratios of magnesium (Mg^{2+}), ammonium (NH_4^+), and phosphate (PO_4^{3-}) needed to enhance precipitation. Laboratory experiments were conducted using magnesium chloride ($MgCl_2 \cdot 6H_2O$, 64% solution) to increase the Mg^{2+} concentration and sodium hydroxide (NaOH) to increase the pH.

Phase 2 of this project investigated the usefulness of a chemical equilibrium model, Visual Minteq, for prescribing the amendments needed to maximize struvite precipitation from liquid swine manure and thus reduce the orthophosphate phosphorus (OP) concentration. The actual concentrations of Mg^{2+}, calcium (Ca^{2+}), potassium (K^+), OP, NH_4^+, alkalinity and pH from a liquid swine manure system were used as inputs to the model. The model was modified to remove species with extremely low formation rates,

because they would not realistically form during a short retention-time process such as those envisioned for swine manure struvite-formation reactors. Using the model's output, a series of bench-scale reactors were used to verify the results.

Finally, phase 3 involved the development of a laboratory-scale, continuous-flow reactor that was used to investigate the hydraulic retention time (HRT) needed to optimize struvite precipitation. Using the values for retention time, the Mg^{2+}:PO_4^{3-} ratio, and pH adjustment that were determined by this research, a full-scale economic analysis was conducted to estimate the cost of using struvite precipitation to reduce the P concentration of a liquid swine manure during the land application process.

Table of Contents

Part		Page
I.	General Introduction	1
	Background	2
	Justification	3
	Objectives	3
II.	Literature Review	5
	1. Literature Review	6
	1.1. Need for Phosphorus Removal from Animal Wastewater	6
	1.2. Phosphorus Removal Methods	7
	1.3. Struvite Precipitation	9
	1.3.1. Chemistry of Struvite Formation	9
	Effect of pH	10
	Effect of Molar Ratios	10
	Effect of Magnesium Source	12
	The Effect of Temperature	13
	Effect of Hydraulic Retention Time (HRT)	14
	1.3.2. Phosphorus Recovery as Struvite from Organic Waste Streams	14
	1.3.3. The Solubility Product of Struvite	15
	1.3.4. Economics	16
	1.3.5. Recovery of the Precipitated Struvite	17
	References	19
III.	Optimization of Phosphorus Precipitation from Swine Manure Slurries to Enhance Recovery	26
	2. Introduction	27
	3. Methods	28
	3.1. Reaction Time and pH Tests	30
	3.2. Molar Ratio Tests	30
	4. Results and Discussion	30
	4.1. Reaction Time and pH Tests	31
	4.2. Molar Ratio Tests	33
	4.3 Precipitate Analysis	34
	5. Conclusions	35
	References	36
IV.	Using a Chemical Equilibrium Model to Prescribe Amendments Required to Precipitate Phosphorus as Struvite in Liquid Swine Manure	38
	6. Introduction	39
	7. Chemical Modeling	40
	7.1. Model Modifications	41
	Magnesium Phosphate Species	42
	Calcium Phosphate Species	43

Calcium Carbonate Species 43
Other Salts 44
7.2. Model Operation 44
8. Testing the Validity of Model's Results 45
9. Results and Discussion 47
9.1. Visual Minteq Results 47
9.2. Model Verification Results 51
9.2.1. Laboratory Results 51
9.2.2. Mass Balance Analysis 52
9.2.3. X-ray Diffraction Results 55
10. Comparison of Visual Minteq Model and Laboratory Results 58
11. Conclusions 64
References 66
V. Effect of Hydraulic Retention Time in a Continuous Flow Reactor on Orthophosphate Removal from Swine Wastewater 70
12. Introduction 71
13. Materials and Methods 74
13.1. Reactor Description 74
13.2. Wastewater Sample 76
13.3. Analysis 77
14. Results and Discussion 77
14.1. Laboratory Results of the Continuous Reactor 77
15. Discussion of Practicality and Feasibility 77
Headloss 80
Flow Rate and Tank Size of $MgCl_2.6H_2O$ 82
Flow Rate and Tank Size of NaOH 82
Mixer 82
16. Economic Evaluation 83
16.1. Land Application without Chemical Precipitation 83
16.2. Land Application with Chemical Precipitation 85
17. Conclusions 88
18. Discussion 89
References 92
VI. Summary and Recommendations for Future Work 95
Summary 96
Recommendations for Future Work 98
Appendix 99
Vita 109

List of Tables

Table		Page
2.1.	Reported values for optimum pH	11
2.2	The effect of Mg^{2+} source on caustic consumption for pH adjustment	12
2.3.	Literature survey for pK_s Values of Struvite	16
2.4.	Cost of producing and selling struvite	18
4.1.	Composition of modeled raw swine wastewater	45
4.2.	Analytical methods used to measure dissolved to quantify liquid swine manure	46
4.3.	Stepwise modeling procedure to determine mass of NaOH required to achieve pH 8.5	49
4.4.	Equilibrated mass distribution predicted by Visual Minteq after the addition of 640 mg/L of NaOH	49
4.5.	Equilibrated mass distribution predicted by Visual Minteq after the addition of $MgCl_2.6H_2O$ (1.0 Mg^{2+}:1.0 PO_4^{3-}) and 680 mg/L of NaOH	50
4.6.	Equilibrated mass distribution predicted by Visual Minteq after the addition of $MgCl_2 \cdot 6H_2O$ (1.5 Mg^{2+}:1.0 PO_4^{3-}) and 700 mg/L of NaOH	50
4.7.	Equilibrated mass distribution predicted by Visual Minteq after the addition of $MgCl_2 \cdot 6H_2O$ (2.0 Mg^{2+}:1.0 PO_4^{3-}) and 800 mg/L of NaOH	52
4.8.	Composition of raw and treated swine wastewater (Standard deviation in parenthesis, n=3). (a) Condition 1 and 2	53
	(b) Condition 3 and 4	53
4.9.	Mass Balance Analysis (no $MgCl_2$ addition at pH 8.5)	54
4.10.	Mass Balance Analysis ($MgCl_2$ addition at pH 8.5, Mg^{2+}:PO_4^{3-} molar ratio is 2:1)	55
4.11.	Comparison of modeled reaction versus actual experimentation results	59
4.12.	Stepwise modeling procedures to determine CO_3^{2-} concentration from virtual titration	62
4.13.	Visual Minteq output	63
4.14.	Stepwise modeling procedure to determine mass of NaOH required to achieve pH 8.5	64
5.1.	Flow rates of raw wastewater and Mg^{2+} associated with various HRT's	76
5.2.	Analytical methods used to measure dissolved to quantify liquid swine manure	78
5.3.	Composition of raw and treated swine wastewater when HRT's are 141, 94, 47, and 18 minutes	78
5.4.	Headloss (h_f) Result	81
5.5.	Design parameters for conical reactor and clarifier	81
5.6.	Parameter values of chemicals	81
5.7.	Capital cost of irrigation equipment	84
5.8.	Power of the pumps and energy consumptions	84

5.9.	The process with reactor (A) Chemical equipment prices	86
	(B) The chemical prices used in the process for each pump-out	86
	(C) The price of pH controller, electrode, and mixer.	87
5.10.	Power of the pumps, mixer and energy consumptions	87
5.11.	Estimated market value of struvite	89
A.1.	Species concentration obtained from model	100

List of Figures

Figure		Page
2.1.	The comparison of $MgCl_2$ and MgO on ammonium removal	13
3.1.	The effect of reaction time and pH on soluble phosphorus removal from the high concentration waste at a Mg^{2+}:PO_4^{3-} molar ratio of 1.6:1 (A) Without pH adjustment and (B) With pH adjusted to 8.5	32
3.2.	The effect of reaction time and pH on soluble phosphorus removal from the low concentration waste at a Mg^{2+}:PO_4^{3-} molar ratio of 1.6:1 (A) Without pH adjustment and (B) With pH adjusted to 8.5	32
3.3.	Effect of molar ratio on PO_4^{3-} removal from swine waste (A) High concentration waste and (B) low concentration waste	34
4.1.	X-ray diffraction detecting the presence of Brushite in the raw liquid swine manure	56
4.2.	Precipitant from the NaOH addition experiment (a) Struvite Monetite	57
	(b) Brushite	57
4.3.	$MgCl_2$ and NaOH amended Waste Struvite Precipitation ($2Mg^{2+}$:$1PO_4^{3-}$).	58
5.1.	The laboratory scale continuous reactor	74
5.2.	Land Application of Lagoon Effluent	80

Part I

General Introduction

Background

The element Phosphorus (P) plays a critical role in living organisms, and can be found in water, soil, and sediments. P is most commonly found in rock formations and ocean sediments as orthophosphate (OP) salts. OP salts are released from rocks through weathering and usually dissolve in soil water and are available to be taken up by plants. Because the quantities of P in soil are generally small, it is often the limiting factor for plant growth. That is why humans often apply phosphate fertilizers on farmland. Of the estimated 150 million tonnes per year of P currently extracted and processed globally, 85% is used in agriculture as fertilizers and feed concentrates (Greaves et al., 1999).

The US Environmental Protection Agency (EPA) identifies agriculture as the largest non-point source of water pollution, surpassing all other industries (EPA, 1996). One-third of this pollution is due to animal production operations. Barnett (1994) reported that domestic farm animals typically excrete 70% of P intake. Moreover, soil erosion and runoff from fields, recycling of crop residues and manures, discharges of urban and industrial wastes, and applications of inorganic fertilizers are the major causes of increased P concentrations in surface waters (Smil, 2000).

Land application of manures and biosolids based on their nitrogen (N) content can result in P over applications of 4 to 8 times because of the higher amount of P compared to N (relative to crop needs) in these materials (Burns et al., 1998). The removal of P as magnesium ammonium phosphate hexahydrate, $MgNH_4PO_4 \cdot 6H_2O$ (struvite) from liquid manure or wastewater is a proven technology that is being used by several wastewater

treatment industries in different regions of the world (Parsons et al., 2001; Jaffer et al., 2002; Ueno and Fujii, 2001; Suzuki et al., 2004).

Justification

Laboratory studies and field trials have shown that P content in swine manure can be reduced by recovering a portion of the P as a crystalline precipitate containing struvite (Wrigley et al., 1992; Beal et al., 1999; Nelson et al., 2000; Burns et al., 2001; Kalyuzhnyi et al., 2001). Phosphorus precipitation technology offers the potential to recover excess P from manures and transport it to areas requiring the addition of P fertilizer for crop production. Using this approach, the treated manure (with a lower P content) can be land-applied at nitrogen rates without over applying P.

Objectives

The goal of this study was to adjust P levels in swine wastewater by removing OP through chemical precipitation. The specific objectives for this study were:

- To determine pH, Mg^{2+} addition rate, and the required reaction time, for the precipitation experiments.

- The chemical model, Visual Minteq 2.23, was investigated to determine its usefulness to predict the amendments needed and thus eliminate the need to do jar testing. Actual concentrations of Mg^{2+}, Ca^{2+}, K^{+}, PO_4^{3-}, NH_4^{+}, and alkalinity of a liquid swine manure sample were used as inputs to the model. Four approaches were taken to determine the changes in saturation with respect to struvite. The first approach was to

simply increase the wastewater pH to 8.5 by adding NaOH. Approaches 2-4 progressively increased the magnesium concentration, and then increased the solution pH to 8.5 with NaOH, until the maximum amount of OP was removed as struvite. Sodium hydroxide with four concentrations of additional Mg^{2+} were modeled with Visual Minteq and then compared with bench-scale analysis.

- A laboratory scale continuous reactor for OP removal from swine wastewater was evaluated and HRT effect was explored. A continuous-flow device was developed for land application of lagoon effluent by optimizing the HRT.

- The cost of using chemical precipitation by simulating the treatment of 7,600 m^3 of liquid swine manure.

Part II

Literature Review

1. Literature Review

1.1. Need for Phosphorus Removal from Animal Wastewater

Animal wastewater in a lagoon contains nutrients such as carbon (C), nitrogen (N), and phosphorus (P). Carbon can be converted into carbon dioxide (CO_2) and methane (CH_4), which are volatile gases, by anaerobic microbes. These gases may be collected as biogas and used for energy or they may escape to the atmosphere. N fixing bacteria take organic nitrogen and change it into ammonia (NH_3). Ammonia is then converted to nitrites (NO_2^-) by *nitrosomonas* bacteria. Nitrite can then be converted to nitrates (NO_3^-) by *nitrobacter*. In a complex series of reactions, microbial communities can transform organic N into molecular nitrogen (N_2) where it can escape to the atmosphere, however, there is not such a gaseous escape pathway for P (Stumm and Morgan, 1996). When the input of phosphorus to waters and soils is higher than it can be assimilated by a population of living organisms, the problem of excess phosphorus content occurs. Animal wastes are relatively large source of recyclable P in modern agriculture. Excessive loading of P onto agricultural lands can result in excessive algal growth (eutrophication) in waters, thus poor surface water quality like offensive taste and odor of drinking water. If this water is a drinking water source, the addition treatment (typically with chlorination) is required before consumption. Eutrophication also seriously disrupts coastal ecosystems in regions receiving high P inputs (Smil, 2000). The growth of algae block sunlight from reaching deeper waters, thus threatens the plants deeper in the water (Smil, 2000). In the P applied soils, complex reactions convert P into a large variety of much less soluble, or insoluble compounds (Smil, 2000). Over application of manures to

cropland has led to P accumulation in soils (Greaves et al., 1999). Relative to crop needs, manure slurries contain higher levels of P than N. When manure is applied to meet crop N needs, P is over applied. The over-application of P onto agricultural lands is a serious environmental issue because it can be transported to surface waters where it can cause eutrophication, and subsequent ecological harm

1.2. Phosphorus Removal Methods

The soluble form of P is orthophosphate (OP). Many organic and inorganic forms of P can be held in water by complexing with suspended solids. A fraction of the form of P can be removed by sedimentation (Rybicki, 1997). For removing the orthophosphate phosphorus (OP), two methods may be considered; biological and chemical precipitation.

Phosphate is removed from solution by biological systems because it is an essential nutrient for bacterial cell formation. By harvesting the cell from the water, the P is removed (Marais et al., 1983). Biological P removal is generally a successful process, however its efficiency is low for wastewaters with high P concentrations (Battistoni et al., 2002).

For chemical P removal, metals that form insoluble phosphate compounds are added to the solution. For example, lime ($CaCO_3$) and trivalent metal salts such as aluminum sulfate ($Al_2(SO_4)_3$, ferric chloride ($FeCl_3$), ferrous (bivalent), and ferric sulfates ($Fe_2(SO_4)_3$) are commonly used to precipitate P (Stumm and Morgan, 1996).

A new approach (Battistoni et al., 1997; Bowers 2004)to remove P from organic waste stream prior to land application is the forced precipitation of magnesium ammonium phosphate hexahydrate ($MgNH_4PO_4 \cdot 6H_2O$), commonly called struvite. Struvite precipitates in the presence of magnesium (Mg^{+2}), ammonium (NH_4^+), and phosphate (PO_4^{3-}). Although swine wastewater contains Mg^{2+}, it is a limiting compound in the formation of struvite, additional Mg^{2+} still needs to be added to optimize the reaction.

This approach is better than the other metal metal complexing approaches. For example, calcium phosphate ($CaPO_4$) is not a useable fertilizer "as such" (very poor solubility in neutral or near neutral soils). Struvite on the other hand can be used directly as a fertilizer. The limited magnesium in animal wastes interferes with calcium carbonate (Stumm and Morgan, 1996). Struvite precipitation on the other hand seems to be pretty much unaffected by carbonate. Finally, magnesium is a useful micro nutrient for plants.

Struvite is frequently formed in recycle flush animal waste management systems. Formation of struvite in flush water recycle pipes has been problematic in liquid manure handling systems because it creates blockages (Buchanan, 1994; Doyle and Parson, 2002). Therefore, a large portion of struvite research has been directed towards removal and prevention of struvite formation rather than towards forced precipitation from solution. However, struvite has been found to be a good plant nutrient source for Mg^{2+}, N, and P and can be used as a slow release fertilizer in the agricultural and horticultural industries (Greaves et al., 1999). It is also used for forest, landscape, orchard trees (Hauck, 1985), and on turf, ornamentals, citrus, vegetable and field crops (Tisdale et al.,

1985). The recovery of phosphorus as precipitated struvite has the potential to substantially reduce manure transportation costs by isolating the excess P and converting it into a crystalline form, which can be cost-effectively transported to a cropping system that requires P input.

1.3. Struvite Precipitation

1.3.1. Chemistry of Struvite Formation

Struvite precipitates in the presence of Mg^{+2}, NH_4^+, and PO_4^{-3} according to following reaction when the thermodynamic solubility product, K_s, is exceeded:

$$Mg^{2+} + NH_4^+ + PO_4^{3-} + 6H_2O \rightarrow MgNH_4PO_4.6H_2O \quad \text{(i)}$$

$$K_s = \left[Mg^{2+}\right]\left[NH_4^+\right]\left[PO_4^{3-}\right] \quad \text{(ii)}$$

Struvite is a white crystalline powder found naturally in peat beds, organic rich sediments, diatomite, basalt, and phosphorus caves. It is also a component of concretions found in both human and animal kidneys, intestines, and lungs (Sharp, 2002). Struvite precipitation is influenced by pH, the molar ratio of Mg^{2+}:NH_4^+:PO_4^{3-}, the degree of supersaturation, temperature, and the presence of certain ions such as calcium (Doyle and Parsons, 2002). Struvite formation in swine slurries is enhanced when pH is between 7 and 11 (Burns and Moody, 2002). Magnesium is generally the limiting nutrient and must be supplemented for optimum struvite formation (Jaffer et al., 2002; Çelen and Türker 2001).

Laboratory tests have explored the optimum conditions (including pH, temperature, Mg^{2+} to NH_4^+ to PO_4^{3-} molar ratio, Mg^{2+} source, hydraulic retention time) for P and NH_3 removal as struvite. Each condition is discussed below.

Effect of pH

Struvite precipitation reaction is highly dependent on pH. Struvite precipitates in basic conditions, with the pH values ranging from 6.5 to more than 10 (Bowers, 2004). Because the typical animal wastewaters are near neutral pH, the pH can be adjusted upward by either adding a base or by aeration to strip CO_2 from the solution. Battistoni et al., (1997) showed that stripping out CO_2 increased pH from 7.9 to between 8.3 and 8.6 in the supernatant of anaerobically digested sludge in 150 minutes. Various authors have reported optimum pH values for struvite precipitation. As it is seen from Table 2.1, optimum pH is the range of between 8.5 to 9.0 for different type of wastewaters such as anaerobic digester effluent, swine wastewater, sludge, and livestock waste.

Effect of Molar Ratios

According to reaction (i), Mg^{2+}, NH_4^+, and PO_4^{3-} are required in equimolar quantities to form $MgNH_4PO_4.6H_2O$. However, because of the common ion effect, other chemical species in solution will form Mg^{2+}, NH_4^+, and/or PO_4^{3-} compounds. This effect requires that additional Mg^{2+} and/or NH_4^+ may be needed to precipitate the maximum mass of P.

Using an anaerobic digester to treat a molasses-based industrial wastewater, Çelen and Türker (2001) found that the optimum Mg^{2+}:NH_4^+ :PO_4^{3-} molar ratio for NH_3 removal as

Table 2.1. Reported values for optimum pH.

Optimum pH	Comments	Reference
9.0	Anaerobic digester effluent used in a bench scale reactor	Jaffer et al., (2002)
8.5	Swine wastewater used in a bench scale reactor	Burns et al., (2002)
8.5-9.5	Wastewater and sludge	Schultze-Rettmer (1991)
9.0	Anaerobic digester effluent used in a pilot scale reactor	Munch and Barr (2001)
8.5-9.0	Anaerobic digester effluent used in a bench scale reactor	Çelen and Türker (2001)
9.0	Livestock waste	Buchanan et al., (1994)
9.0	Digester supernatant used in a lab and pilot scale reactor	Siegrist (1996)

struvite was 1.2:1:1.2. Jaffer et al. (2002) achieved only 3% increase in P removal when the molar Mg:P ratio increased from 1.05 to 3.5, during pilot plant trials using magnesium chloride ($MgCl_2$) as a Mg^{2+} source. Calcium concentration has an effect on struvite production because it may influence the Mg^{2+} dose. Musvoto et al., (2000) determined that the Mg^{2+}:Ca^{2+} ratio should be greater than 0.6 in order to solely produce struvite. Musvoto et al., (2000) also reported that overdosing Mg^{2+} (Mg^{2+} concentration was not quantified by the authors), combined with a high concentration of P could also form trimagnesium phosphate ($Mg_3(PO_4)_2.22H_2O$) or $Mg_3(PO_4)_2.8H_2O$), and reduce the amount of struvite precipitated.

Effect of Magnesium Source

In biosolids and manures, Mg^{2+} is typically the limiting ion controlling struvite precipitation and often has to be added to initiate precipitation. For the purpose of optimization, various Mg^{2+}sources have been studied. Some authors have used magnesium oxide (MgO), which has the additional benefit of raising the solution pH and thus promoting struvite precipitation (Munch and Barr 2001; Schuiling and Andrade, 1999; Shulze-Retmer, 1991). Çelen and Türker (2001) studied NH_3 removal as struvite from molasses-based industrial wastewater. They found that $MgCl_2$ was a better Mg^{2+} source than MgO. Using swine wastewater, Burns et al., (2001) and Beal et al., (1999) found the same results. Less NaOH was used for pH adjustment when MgO is used (Table 2.2), however, less NH_3 was removed as struvite (Figure 2.1).

Burns et al., (2001) used $MgCl_2$ as a Mg^{2+} source and reported a 90% reduction in OP in swine wastewater. Seawater is a good source of Mg^{2+} (Lee at al., 2003). Seawater has a typical Mg^{2+} concentration of 1250 mg/L (Kumashiro et al., 2001). They obtained 70% P removal from biosolids by using seawater as a Mg^{2+} source. Lee et al., (2003) reported that when seawater was used as a Mg^{2+} source in swine wastewater, OP removal was 81% at pH 10.

Table 2.2 The effect of Mg^{2+} source on caustic requirement for pH adjustment (Çelen and Türker 2001).

	NaOH (30%) requirement (mL)		
Mg^{2+} source	pH 8	pH 8.5	pH 9
$MgCl_2.6H_2O$	5.5	5.75	6.0
MgO	2.25	2.35	3.5

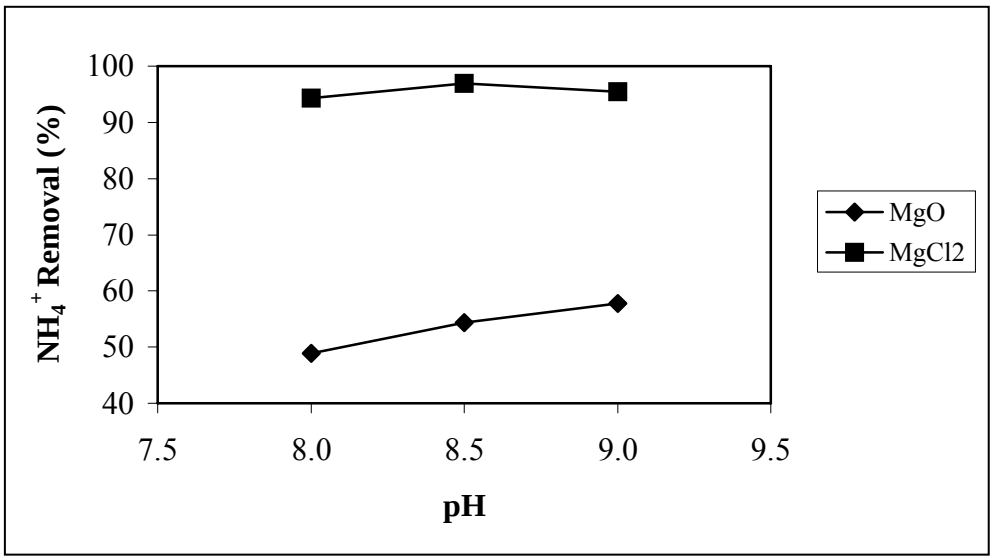

Figure 2.1. The comparison of $MgCl_2$ and MgO on ammonium removal (Çelen and Türker 2001)

The Effect of Temperature

The literature provides contradictory information about the effects of temperature on struvite crystallization. Andrade and Schuling, (1999) reported that influence of temperature on struvite solubility in the anaerobic digestion of a wastewater treatment plant was studied by Borgerding, (1972). They concluded that when the temperature increased from 0°C to 20°C, struvite solubility increased. However, above this temperature solubility steadily declined with increased temperature. Webb and Ho, (1992) assumed 30°C to be the temperature of maximum struvite solubility in experiments designed to define thermodynamic parameters for its crystallization. On the other hand, Webb, (1988) measured the solubility of struvite in various salt solutions in temperatures from 0-80°C. Webb concluded that increasing temperature causes a rise in the struvite solubility, especially for more concentrated solutions. Çelen and Türker,

(2001) reported that the reaction temperature did not have influence on struvite solubility in anaerobic digester effluent with temperatures 25-40°C.

Effect of Hydraulic Retention Time (HRT)

Ohlinger et al., (2000) reported that struvite removal efficiency exceeded 80% when the HRT exceeded one hour. Munch and Barr (2001) found that after 1-2 hours, HRT has no effect on the effluent OP concentration. However, Çelen and Türker (2001) concluded that struvite precipitation is very fast and completed in minutes. Therefore, they assumed a 40-minute reaction time for process equilibrium.

1.3.2. Phosphorus Recovery as Struvite from Organic Waste Streams

The technology to remove P from organic waste streams as struvite has been demonstrated in municipal and industrial wastewater treatment plants. There are a number of full-scale wastewater treatment plants operating across the world. The largest are in Japan: Shimane Prefecture (500 m^3/day), Fukuoka Prefecture (170 m^3/day) and at Osaka South Ace Center (266 m^3/day) (Parsons et al., 2001). They each use Mg^{2+} addition ($Mg(OH)_2$ or $MgCl_2$) and pH adjustment (to pH 8.1-8.9) to cause struvite precipitation. The Shimane Prefecture reactor removes 90% of OP from the treated supernatant. In Italy, a full-scale struvite crystallization plant has been built to remove OP from the anaerobic supernatant of sewage sludge (Battistoni et al., 2001).

In England, struvite has been recovered by a pilot scale project at the Slough municipal wastewater treatment plant operated by Thames Water (Johnson et al., 2004). The Slough reactor is based on the Unitika phosnix process, using a modified lamella

clarifier. In this device, the lamella plates have been removed and the central baffles are extended to create a reaction zone and two settling zones. The reactor contents are mixed (by an air stream entering from the base) and then move into the settlement zones. Organic solids rise and are removed with the effluent, whereas the struvite crystals are circulated and grow. Being 1.7 times more dense than water, these crystals eventually sink to the bottom, are drawn off, and dewatered (Sharp, 2002).

Some applications of this technology have been applied to the recovery of P from animal manures. In the Netherlands, Thermhos International has recovered K-struvite (KNH_4PO_4) from calf manure in the company's industrial thermal P production process (Shipper and Verhoek 2004). In Japan, a 4 m^3/day stirred, aerated reactor was build for struvite precipitation and recovery from swine wastewater (Suzuki et al., 2004). These workers found that without Mg^{2+} addition, a 70% removal of phosphate was observed. With Mg addition, a 90% removal of phosphate was observed. Bowers (2004) developed a fluid-bed struvite crystallizer for reducing phosphorus in effluent from livestock waste lagoons in Northern Carolina, USA.

1.3.3. The Solubility Product of Struvite

There is a considerable body of information concerning solubility and thermodynamic solubility product (pK_s) of struvite (Table 2.3). The calculations of pK_s have been explored for a wide range of experimental conditions, including pH, temperature and ionic strength. Also various computational methods with different thermodynamic databases have been applied in the calculations (Andrade and Schuiling,

Table 2.3. Literature survey for pK_s Values of Struvite.

pK_s	T(^oC)	Source	Reference
12.60	38	urine	*Elliot et al., 1959
12.33	38	water	*Johnson, 1959
13.15	25	aqueous solution	*Taylor et al., 1963
13.12	25	water	*Burns and Finlayson, 1982
12.97	35	water	*Burns and Finlayson, 1982
12.94	38	water	*Burns and Finlayson, 1982
12.84	45	water	*Burns and Finlayson, 1982
12.6	20	simulation	Loewenthal et al.,1994
11.84	25	simulation	*Booram et al., 1975
12.76	25	water	Webb and Ho., 1992
12.36		simulation	Buchanan et al., 1994
9.41	20	water	*Borgerding, 1972
9.94	25	aqueous solution	Abbona et al.,1982
13.26	25	digester effluent	Ohlinger, 1998

* adapted from (Andrade and Schuling, 1999).

1999). These values vary significantly, as is shown in Table 2.3, leading to differences of about three orders of magnitude between the lowest and the highest value of K_s.

The variability of K_s can be related to the following reasons:

- the solubility products may have been derived by using approximate solution equilibria,
- the effects of ionic strength are often neglected,
- mass balance and electroneutrality equations are not always used,
- the chemical speciations chosen for the calculations are variable,
- temperature dependence is not always considered.

1.3.4. Economics

Struvite recovered from wastewater has agronomic value as a fertilizer. It is a good source of plant available Mg^{2+}, N, and P (Çelen and Türker 2001). It is also used for

forest, landscape, orchard trees (Hauck, 1985), and on turf, ornamentals, citrus, vegetable and field crops (Tisdale et al., 1985). In the high-value turf grass, vegetable, and nursery crop industries there is increasing environmental concern relating to the potential of nutrient-rich runoff and leachate contaminating adjacent waterbodies. The slow-release nature of struvite (only slightly-soluble) could minimize nutrient loss as compared to many commercial fertilizers. The value of struvite as a fertilizer replacement is shown in Table 2.4. Costs for producing struvite vary from $140/tonne in Australia to $460/tonne in Japan. This compares to the market value of struvite, which range between $9 to $1885/tonne (Doyle and Parsons, 2002).

1.3.5. Recovery of the Precipitated Struvite

Recovery of the precipitated struvite from the waste stream is the next challenge. Since struvite is twice as dense as most of the organic matter in animal waste, the precipitate could theoretically be recovered using separation methods such as a grit removal screw or a hydro-cyclone. A grit removal screw designed to separate sand from manure slurry (Wedel, 1999) could have a strong potential to remove struvite from treated slurry.

Table 2.4. Cost of producing and selling struvite (adopted from Doyle and Parsons 2002).

Country	Description	Cost (US$/tonne NP)	Reference
Australia	Cost of production 1 tonne of NP	140	Booker et al., 1999
Australia	Suggested market value for NP	160	Doyle and Parsons 2002
Australia	Conservative estimate of NP as 'boutique' fertilizer	48	Munch et al., 2001
Australia	Suggested market value for NP	36-60	Munch and Barr, 2001
Japan	Operational costs for producing 1 tonne	84	Kumashiro et al., 2001
Japan	Cost of purchasing 1 tonne of NP	50	Munch and Barr, 2001
Japan	Suggested value of NP	345	Taruya et al., 2000
Japan	Cost of purchasing 1 tonne of NP	46	Gaterell et al., 2000
Japan	Cost of NP	91	Gaterell et al., 2000
UK	Cost of NP as an ingredient	2	Gaterell et al., 2000
UK	Cost of phosphate rock	7-9	Driver et al., 1999
UK	Suggested market value for NP	52	Jaffer et al., 2002

References

Abbona, F., M.H.E. Lundager, and r. Boistelle. 1982. Crystallization of Two Magnesium Phosphates, Struvite and Newberyte: Effect of pH and Concentration. Journal of Crystal Growth 57, 6-14.

Andrade, A. and O. Schuling. 1999. Literature Search, Digest and Assessment Concerning Struvite Recovery for Recycling from Waste Waters. *Final Report for CEEP (CEFIC).,* Geochem Research BV / Utrecht University Holland.

Barnett, G.M. 1994. Phosphorus forms in animal manure. Biores. Tecnol., 49, 139-147

Battistoni, P., G. Fava, P. Pavan, A. Musacco, and F. Cecchi. 1997. Phosphate removal in anaerobic liquors by struvite crystallization without addition of chemicals: preliminary results. *Wat. Res.* 31, 2925-2929.

Battistoni, P., R. Boccadora, P. Pavan, C. Cecchi. 2001. Struvite crystallization in sludge dewatering supernatant using air stripping: the new full-scale plant in Treviso (Italy) sewage works. Noordwijkerhout, The Netherlands: Second International Conference on Phosphate Recovery for Recycling.

Battistoni, P., A. D. Angelis, M. Prisciandaro, R. Boccadoro, and D. Bolzonella. 2002. P removal from anaerobic supernatants by struvite crystallization: long term validation and process modelling. *Wat. Res.* 36(8):1927-1938.

Beal L.J., R.T. Burns K.J. Stalder. 1999. Effect of anaerobic digestion on struvite production for nutrient removal from swine waste prior to land application. Presented at the 1999 ASAE International Meeting in Toronto, Canada. Paper No. 994042. ASAE St. Joseph, MI.

Booker, N.A., A.J. Priesley, and I.H. Fraser. 1999. Struvite formation in wastewater treatment plants: opportunities for nutrient recovery. Environ. Technol., 20:777-82.

Booram, C.V., R.J. Smith, and T.E. Hazen. 1975. Crystalline phosphate precipitation from anaerobic animal waste treatment lagoon liquors. Transactions of the ASAE, 340-343.

Borgerding, J. 1972. Phosphate deposits in digestion systems. Journal WPCF, 44, 5, 813-819.

Bowers, K. E. 2004. Development of a Struvite Crystallizer for Reducing Phosphorus in Effluent from Livestock Waste Lagoons. PhD. North Carolina State University.

Buchanan, J.R., C.R. Mote, and R.B. Robinson. 1994. Thermodynamic of Struvite Formation. *American Society of Agricultural Engineers*, 37(2): 617-621.

Burns, J. R., B. Finlayson. 1982. Solubility product of magnesium ammonium phosphate hexahydrate at various temperatures. The Journal of Urology. 128, pp. 426-28.

Burns, R.T., T.L. Cross, K.J. Stalder, and R.F. Theurer.1998. Cooperative Approach to Land of Animal Waste in Tennessee. Presented at Animal Production Systems and the Environment : An International Conference on Odor, Water Quality, Nutrient Management and Socioeconomic Issues. Published in proceedings: Volume 1: pages 151-156 Des Moines, Iowa.

Burns R.T., Moody L.B., Walker F.R., D.R. Raman. 2001. Laboratory and in-situ reductions of soluble phosphorus in liquid swine waste slurries. Environmental Technology, 22, 1273-1278.

Burns, R.T. and L.B. Moody. 2002. Phosphorus Recovery from animal manures using optimized struvite precipitation. Proceedings of coagulants and flocculants: Global market and technical opportunities for water treatment chemicals, Chicago, Illinois.

Çelen, I. and M. Türker. 2001. Recovery of ammonia from anaerobic digester effluents. *Environ. Technol.,* 22(11), 1263-1272.

Doyle, J.D., and S.A. Parsons. 2002. Struvite formation, control and recovery. Wat. Res., 36, 3925-3940.

Driver, J., D. Lijmbach, and I. Steen. 1999. Why recover phosphorus for recycling, and how? Environmental Technology, 20, 651-662.

Elliot, J.S., R.F. Sharp, and L. Lewis. 1959. The Solubility of Struvite in Urine, The Journal of Urology, Vol. 81, No. 3, pp. 366-368.

EPA. 1996. Managing Nonpoint Source Pollution from Agriculture: EPA841-F-96-004F. available at: http://www.epa.gov/owow/nps/facts/point6.htm.

Gaterell, M.R., R. Gay, R. Wilson, J. N. Lester. 2000. An economic and environmental evaluation of the opportunities for substituting phosphorus recovered from wastewater treatment works in existing UK fertilizer markets. Environ. Technol., 21:1067-84.

Greaves, J., P. Hobbes, D. Chadwick, and P. Haygarth. 1999. Prospects for the recovery of phosphorus from animal manures: a review. Environmental Technology, 20, 697-708.

Hauck, R. D. 1985. Slow release and bioinhibitor-amended nitrogen fertilizers. Soil Science of America, Madison WI: In Fertilizer Technology and Use (3rd Edition). 293-322.

Jaffer, Y., T.A.Clark, P. Pearce, and S.A. Parsons. 2002. Potential phosphorus recovery by struvite formation. Wat. Res. 36, 1834-1842.

Johnson, R.G. 1959. The solubility of magnesium ammonium phosphate hexahydrate at 38° C with considerations pertaining to the urine and the formation of urinary calculi. The Journal of Urology, 81, 5

Johnson, A., R. Hammond, M. Lewington, A. Ratnam. 2004. Struvite potential as an ingredient in horticultural fertilizer. Cranfield University, England: International Conference on Struvite: Its Role in Phosphorous Recovery and Reuse.

Kalyuzhnyi S., V. Skylar, A. Epov, I. Arkhipchenko, I. Barboulina, O. Orlova, and A. Klapwijk. 2001. Phosphate recovery via precipitation from anerobically treated pig manure wastewater. Proceedings of the 2nd International Conference on Phosphorus Recovery for Recycling from Sewage and Animal wastes. Noordwijkerhout, Holland. March 12-14.

Kumashiro K., H. Ishiwatari, and Y. Nawamura 2001. A pilot plant study using seawater as a magnesium source for struvite precipitation. Proceedings of the 2nd International Conference on Phosphorus Recovery for Recycling from Sewage and Animal wastes. Noordwijkerhout, Holland. March 12-14.

Lee, S.I., S.Y. Weon, C.W. Lee, and B. Koopman. 2003. Removal of nitrogen and phosphate from wastewater by addition of bittern. Chemosphere, 51, 265-271.

Loewenthal, R.E., U.R.C. Kornmuller, and E.P. Heerden. 1994. Modelling struvite precipitation in anaerobic treatment systems. *Water Sci. Technol.,* **30,** 107-116.

Marais, G.R., R.E. Loewenthal, and I.P. Siebritz. 1983. Observations supporting phosphate by biological excess uptake – a rewiew. *Wat. Sci. Tech.* 15, 15-41.

Munch, E. V., and K. Barr. 2001. Controlled struvite crystallization for removing

phosphorus from anaerobic digester sidestreams. Wat. Res., 35, 151-159.

Munch, E. V., A. Scott, J. Josey, K. Barr. 2001. Making a business from struvite crystallization for wastewater treatment: turning waste into gold. Second International Conference on Recovery of Phosphates from Sewage and Animal Wastes, 12-14 March, Noordwijkerhout, Holland.

Musvoto, E.V., M.C. Wentzel. and G.A. Ekama 2000. Integrated chemical-physical processes modelling-II. simulating aeration treatment of anaerobic digester supernatants. *Wat. Res.* 34, 1857-1867.

Nelson N.O., R.L. Mikkelsen, and D.L. Hesterberg. 2000. Struvite formation to remove phosphorus from anaerobic swine lagoon effluent. Proceedings of the 8th International Symposium on Animal, Agricultural and Food Processing Wastes. October. Des Moines, Iowa. J.A. Moore (ed), ASAE Publications. St. Joseph, MI.

Ohlinger K.N., T.M. Young, and E.D. Schroeder. 1998. Predicting struvite formation in digestion. *Wat. Res.,* **32,** 3607-3614.

Ohlinger, K.N., T.M. Young, and E.D., Schroeder. 2000. Post digestion struvite precipitation using a fluidized bed reactor. Journal of Environmental Engineering, 126, 361-368.

Parsons, S. A., F.Wall, J. Doyle, K.Oldring, and J. Churchley. 2001. Assessing the potential for struvite recovery at sewage treatment works. *Env. Tech.* 22(11):1279-1286.

Rybicki, S. 1997. Advanced Wastewater Treatment Report No:1, Phosphorus Removal From Wastewater, a Literature Review. Royal Institute of Technology.

Taylor, A.W., A.W. Frazier, and E.L. Gurney. 1963. Solubility products of magnesium ammonium and magnesium potassium phosphates. Trans Faraday Soc 1963; 59:1580-4.

Schuiling, R.D., and A. Andrade. 1999. Recovery of struvite from calf manure. Env. Tech., 20, 765-768.

Schulze-Rettmer, R. 1991. The simultaneous chemical precipitation of ammonium and phosphate in the form of magnesium ammonium phosphate, *Water Sci. Technol.,* 23, 659-667

Sharp, E. 2002. Phosphorus recovery from centrifuge liquors using magnesium hydroxide for controlled struvite precipitation. MSc Thesis, Cranfield University, England.

Shipper, W. and A. Verhoek. 2004. Struvite as an alternative feedstock for elemental phosphorus production. Cranfield University, England: International Conference on Struvite: Its Role in Phosphorous Recovery and Reuse.

Siegrist, H. 1996. Nitrogen Removal from Digester Supernatant-Comparison of Chemical and Biological Methods, *Water Sci. Technol.,* **34**, 399-406.

Smil V. 2000. Phosphorus in the environment: Natural flows and human interferences. Annu. Rev. Energy Environ. 25, 53-88.

Stumm, W. and J.J. Morgan. 1996. Aquatic Chemistry, John Wiley & Sons, Inc. New York.

Suzuki, K., Y. Tanaka, T. Osado, and M. Waki. 2002. Removal of phosphate, magnesium, and calcium from swine wastewater through crystallization enhanced by aeration. Wat. Res., 36, 2991-2998.

Suzuki, K., Y. Tanaka, K. Kuroda, D. Hanajima, and Y. Fukumoto. 2004. Phosphorus in swine wastewater and its recovery as struvite in Japan. Cranfield University, England: International Conference on struvite: Its role in phosphorous recovery and reuse.

Taruya, T., Y. Ueno, and M. Fujii. 2000. Development of phosphorus resource recycling process from sewage. IWA World Congress, Paris.

Tisdale, S. L., W. L. Nelson, and J. D. Beaton. 1985. *Soil Fertility and Fertilizers.* 4th edition. MacMillan Publishing Company. New York.

Ueno, Y. and M. Fujii. 2001. Three years of operating and selling recovered struvite from full-scale plant. *J. Environ. Technol.,* 22(11), 1373-1381.

Webb, K.M., 1988. The solubility of struvite and its application to a piggery effluent problem. Bachelor thesis, School of Biological and Environmental Sciences, Murdoch University, Australia .

Web, K.M. and G.E. Ho. 1992. Struvite ($MgNH_4PO_4.6H_2O$) solubility and its application to a piggery effluent problem. Wat. Sci.Tech. 26, 2229-2232.

Wedel, A.W. 1999. Method and apparatus for the separation of manure and sand. United State Patent and Trademark Office. Patent No. 5950839.

Wrigley, T.J., K.M. Webb, and H. Venkitachalm. 1992. A laboratory study of struvite precipitation after anaerobic digestion of piggery wastes. Bioresource Technology, 41, 117-121.

Part III

Optimization of Phosphorus Precipitation from Swine Manure Slurries to Enhance Recovery

This chapter is a slightly revised version of a paper by the same name published in the journal *Water Science and Technology* in 2003 by Robert Burns, Lara Moody, Ipek Çelen, and John Buchanan:

Burns, R.T., Moody, L.B., Çelen, I, and Buchanan, J.R. Optimization of phosphorus precipitation from swine manure slurries to enhance recovery. *Water Science and Technology* 48: 139-146.

My primary contributions to this paper included data collection and data analysis.

2. Introduction

Laboratory studies show that P content in swine manure can be reduced by the precipitation of magnesium ammonium phosphate hexahydrate, $MgNH_4PO_4 \cdot 6H_2O$ (struvite) (Beal et al., 1999; Burns et al., 2001; Kalyuzhnyi et al., 2001, Nelson et al., 2000; Wrigley et al., 1992). Precipitation of P prior to land application of manure offers the potential to recover excess P from animal manures and move it to cropping areas that require P fertilizer inputs.

While investigators have examined P precipitation in swine wastes on a laboratory scale, little work has been done to develop this process for field scale application (Nelson et al., 2000). Burns et al. (2001) has shown a 90% reduction in orthophosphate phosphorus (OP) via struvite precipitation in a 140,000 L swine slurry holding pond under field conditions. Because the limiting ion for struvite formation in animal manure slurries is usually magnesium (Mg^{2+}), manure slurries are typically amended with Mg^{2+} to force the precipitation of struvite. Possible Mg^{2+} amendments include magnesium hydroxide ($Mg(OH)_2$), magnesium oxide (MgO), and magnesium chloride ($MgCl_2 \cdot 6H_2O$). Miles and Ellis (2001) initially used a 50% $Mg(OH)_2$ slurry and P

fertilizer to reduce ammonia (NH_3) through struvite precipitation. However, they incurred insolubility problems with the $Mg(OH)_2$ and changed to the use of MgO. Beal et al. (1999) used MgO in bench scale reactions during initial struvite experiments. P reductions of greater than 90% (1256 to 105 mg P L^{-1} and 1591 to 81 mg P L^{-1}) were achieved following the addition of MgO. MgO had the additional benefit of increasing pH to aid the struvite reaction. However, because of the insolubility of the material, reaction time was long (20 min) and residual MgO existed after the reaction. Further bench scale experiments showed that $MgCl_2 \cdot 6H_2O$ was a good source of Mg^{2+} for struvite formation (Burns et al. 2001). Because of its solubility, $MgCl_2 \cdot 6H_2O$ was easier to handle and it reduced the reaction time that was required to bring Mg^{2+} into solution. However, because $MgCl_2 \cdot 6H_2O$ is slightly acidic (pH of 5), it does not increase pH as MgO does. In laboratory experiments where $MgCl_2 \cdot 6H_2O$ was added and the pH was not adjusted, there was a 76% reduction in OP (572 to 135 mg P L^{-1}). When pH was adjusted to 9, using NaOH, 91% of the OP was removed (572 to 50 mg P L^{-1}). In this study Burns et al. (2001) added $MgCl_2 \cdot 6H_2O$ at a rate calculated to provide a 1.6:1 Mg^{2+}:P molar ratio.

The primary objective of this work was to determine the effect of reaction time, pH, molar ratio on the precipitation reactions in the swine wastewater and adding a seed material to the reaction to enhance precipitation.

3. Methods

The wastewater used in this work was obtained from two swine facilities. Supernatant was collected from a pull-plug pit under a swine farrowing unit (referred to

henceforth as high concentration waste) and from a holding pond at a feeder pig unit operating as a recycle flush system (referred to henceforth as low concentration waste). The high concentration waste contained approximately1000 mg/L PO_4^{3-} and 51,000 mg/L COD. The low concentration waste contained approximately 230 mg/L of PO_4^{3-} and 410 mg/L COD. The initial Mg^{2+}: NH_4^+:PO_4^{3-} ratio in the high and low concentration wastes were 0.26:18:1 and 0.58:12:1, respectively. Wastewater was collected in 19-L containers and refrigerated at 4ºC. Experiments were carried out over a two-month period following collection of the waste.

All of the precipitation experiments were carried out as batch reactions in 500-mL beakers with a waste volume of 200 or 400 mL. Beaker contents were mixed using a magnetic stirrer. For each reaction, a representative sample was retrieved from the collected wastewater. All reactions took place at room temperature (approximately 23^oC). The magnesium source for the reactions was $MgCl_2 \cdot 6H_2O$ in 64% solution. For all tests where pH was adjusted, NaOH was used to raise the waste pH.

Samples were analyzed for soluble phosphorus, soluble magnesium, ammonia and COD. Orthophosphate was analyzed using *QuickChem* Method 12-115-01-1-H (*Lachat Insturments*, Milwaukee, Wisconsin, USA). Soluble magnesium was analyzed with atomic absorption spectrophotometery using a *Perkin Elmer* method for Analysis of Exchangeable Cations (AY-2) (*Perkin Elmer*, Norwalk, Connecticut). Ammonia was analyzed using Standard Method 4500-NH_3 B & C for distillation and titration (Standard Methods for the Examination of Water and Wastewater, 1998). Chemical oxygen demand was measured using Standard Method 5220, a colorimetric, reactor digestion method

(Standard Methods for the Examination of Water and Wastewater, 1998). Before analyzing, the samples were centrifuged in an IEC Clinical Centrifuge (estimated 3000 g) for 5 minutes, (each centriguge tube was 40 mL) and then filtered with a 0.45 μm Millex Millipore syringe filter (Millipore Corporation Bedford, MA 01730 USA).

3.1. Reaction Time and pH Tests

To determine the effect of reaction time and pH on the precipitation reactions, the high and low concentration swine wastes were reacted with $MgCl_2 \cdot 6H_2O$ for a 40-minute period with and without pH adjustment. During the experiments pH was controlled. Magnesium was added at a Mg^{2+}:PO_4^{3-} rate of 1.6 : 1. The reaction volume for the experiment was 400 mL. Samples were extracted from the continuously mixed reactions at 5, 10, 20, 30 and 40 minutes and analyzed for OP and Mg^{2+}. In order to stop the reaction pH was decreased by adding concentrated HCl.

3.2. Molar Ratio Tests

For the molar ratio tests, the pH of the waste was increased to 8.5 using NaOH and the reaction time for the tests was 10 min. Each waste was tested at five different molar Mg^{2+}: PO_4^{3-} ratios ranging from 1.6 : 1 to 3.5 : 1. The reaction volume for the experiment was 200 mL. Samples were analyzed for NH_3, OP and Mg^{2+}.

4. Results and Discussion

Over the two-month period that the precipitation reactions were carried out, the OP concentration in the collected swine waste decreased with time. As a result, the

experiments discussed in this paper were carried out at variable initial PO_4^{3-} concentrations. The complexity of the waste stream makes a singular explanation of this observation difficult. However, reductions in OP might be primarily a result of the formation of calcium phosphate in the stored waste.

4.1. Reaction Time and pH Tests

Tests were performed on the two swine wastes to determine optimum precipitation reaction times to be used in the molar ratio experiments. While performing these tests, the effect of increasing wastewater pH in the high and low concentration waste to 8.5 from 7.4 and 7.5, respectively, was also analyzed. The PO_4^{3-} concentration in the high concentration waste at the time of the reaction and pH experiments was 1057 mg/L. Test results showed an increase in PO_4^{3-} removal as reaction time increased from 0 to 40 min (Figure 3.1A & 3.1B). However, the resulting PO_4^{3-} concentrations were only 3.4 and 1.3% higher after 10 min into the reaction than after 40 min into the reaction. As the pH was increased from 7.4 to 8.5, there was an increase in PO_4^{3-} removal. The resulting PO_4^{3-} concentrations at a pH of 7.4 and 8.5 were 95 and 21 mg/L after 10 min and 59 and 7 mg/L after 40 min, respectively. As a result, the molar ratio tests on the high concentration waste were carried out using a 10 min reaction time at a pH of 8.5.

The initial PO_4^{3-} concentration of the low concentration swine waste at the time of the experiments was 226 mg/L. As with the high strength waste, the PO_4^{3-} concentration decreased with increasing reaction time (Figure 3.2A & 3.2B). The resulting PO_4^{3-} concentrations were 21 and 1.7% higher after 10 min into the reaction than after 40 min into the

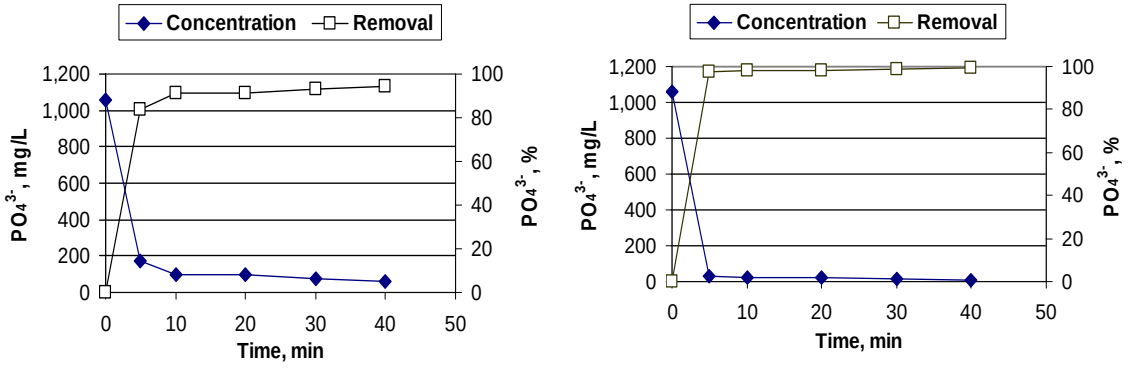

Figure 3.1. The effect of reaction time and pH on soluble phosphorus removal from the high concentration waste at a Mg^{2+}:PO_4^{3-} molar ratio of 1.6:1.

(A) Without pH adjustment (pH 7.4) and (B) With pH adjusted to 8.5.

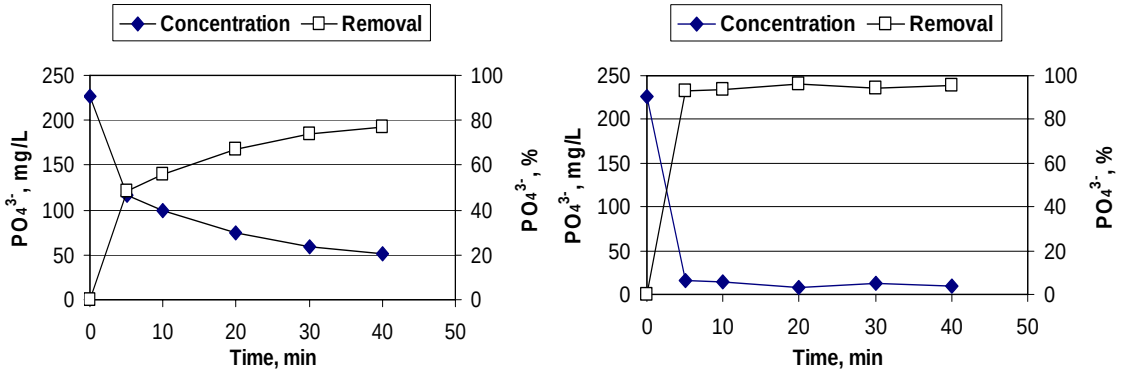

Figure 3.2. The effect of reaction time and pH on soluble phosphorus removal from low concentration swine waste at a Mg^{2+}:PO_4^{3-} molar ratio of 1.6:1. (A) Without pH adjustment (pH 7.5) and (B) With pH adjusted to 8.5.

reaction. OP concentration in the waste decreased as pH increased from 7.5 to 8.6. At a pH of 7.5, 77.3% of the PO_4^{3-} was removed, and at a pH of 8.6, 95.6% of the PO_4^{3-} was removed. Molar ratio tests were performed at a pH of 8.5 using a 10 min reaction time.

4.2. Molar Ratio Tests

As previously indicated in the Methods section of this chapter, both the high and low concentration wastes were magnesium deficient and lacked the 1:1:1 molar ratio necessary for maximum struvite precipitation. Additionally, previous research has shown that additional amounts of Mg^{2+} are required to overcome the effects of complexing agents that can bind to magnesium, such as organic material (Schuiling and Andrade, 1999; Nelson et al., 2000; Burns et al., 2001). Both the high and low PO_4^{3-} concentration wastes were reacted using molar ratios of Mg^{2+}:PO_4^{3-} greater than 1:1. For these experiments, the initial PO_4^{3-} concentration of the waste was 590 mg/L for the high concentration waste and 157 mg/L for the low concentration waste. The results indicted that at molar ratios greater than 1:1, high PO_4^{3-} removal rates were obtained (Figure 3.3A & 3.3B). In the high concentration waste shown in Figure 3.3A, a Mg^{2+}:PO_4^{3-} of 1.6:1 was sufficient to achieve 98% PO_4^{3-} removal. Increasing the ratio to 3.2:1, increased removal by 1%. Similarly, the low concentration waste (Figure 3.3B) was not affected by increasing the ratio from 1.7 to 3.5. The results show that a molar ratio of 1.6:1 (Mg^{2+}:PO_4^{3-}) is sufficient to overcome the binding of organic complexing agents to the additional magnesium.

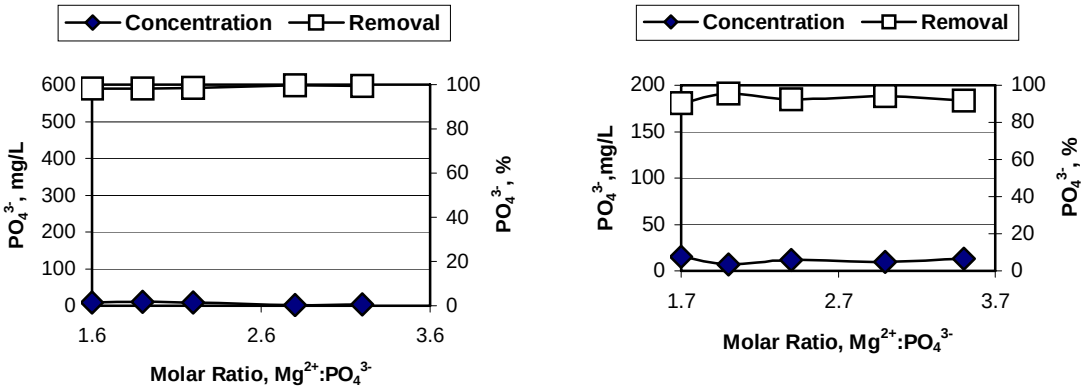

Figure 3.3. Effect of molar ratio on PO_4^{3-} removal from swine waste. (A) High concentration waste and (B) Low concentration waste.

4.3. Precipitate Analysis

Precipitate from the high concentration waste was analyzed using x-ray diffraction. The results show the presence of the minerals struvite and brushite ($CaPO_3(OH)\cdot 2H_2O$). This demonstrates that other P minerals will form. The precipitate contained 34,250 mg kg^{-1} Mg^{2+}, 18,550 mg kg^{-1} of NH_3 – N, 431,480 mg kg^{-1} of OP. The molar ratio of Mg^{2+}:NH_4^+:PO_4^{3-} of the precipitate was 1:0.74:3.2. The P produced precipitate is not pure struvite, as the molar ratio of pure struvite is 1:1:1, excluding the hexahydrate. The formed precipitate is enhanced with P from the formation of brushite and other phosphate containing compounds that may have been formed but not identified. Since the overall goal is to recover P, rather than produce pure struvite, this is a favorable result.

5. Conclusions

The results of the reaction time portion of this study indicate that a long residence time in a field-scale precipitation unit is unnecessary. While an increase in OP removal was observed with a 40 min reaction time when compared to the 10 min test, this increase in recovery was not great enough to justify the increased energy and time required for the increased reaction time.

Adjusting the pH in the high and low concentration wastes from 7.4 and 7.5 to 8.5 resulted in an additional 7 and 18% of OP removal, respectively. These results show the value of increasing swine waste pH to optimize the precipitation of OP as a recoverable struvite based precipitate.

Molar ratios of Mg^{2+}:PO_4^{3-} of 1.6:1 were sufficient to overcome the binding problems presented by common ion effect in the high and low concentration waste. Mg^{2+} addition greater than 1.6:1 did not effectively increase OP removal because OP removal at 1.6:1 was already high.

References

Beal, L.J., R.T. Burns, and K.J. Stalder. 1999. Effect of anaerobic digestion on struvite production for nutrient removal from swine waste prior to land application. Presented at the 1999 ASAE International Meeting in Toronto, Canada. Paper No. 994042. ASAE St. Joseph, MI.

Burns, R.T., L.B. Moody, F.R. Walker, and D.R. Raman. 2001. Laboratory and in-situ reductions of soluble phosphorus in liquid swine waste slurries. Environmental Technology, 22, 1273-1278.

Greaves, J., P. Hobbes, D. Chadwick, and Haygarth P. 1999. Prospects for the recovery of phosphorus from animal manures: a review. Environmental Technology, 20, 697-708.

Standard Method for the Examination of Water and Wastewater 1998. 20th ed, American Public Health Association/ American Water Works/ Water Environment Federation, Washington, DC, USA

Miles, A. and T.G. Ellis. 2001. Struvite precipitation potential for nutrient recovery from anerobically treated wastes. Wat. Sci. Tech., 43(11), 259-266.

Nelson, N.O., R.L. Mikkelsen, and D.L Hesterberg. 2000. Struvite formation to remove phosphorus from anaerobic swine lagoon effluent. Proceedings of the 8th International Symposium on Animal, Agricultural and Food Processing Wastes. October. Des Moines, Iowa. J.A. Moore (ed), ASAE Publications. St. Joseph, MI.

Schuiling, R.D. and A. Andrade. 1999. Recovery of struvite from calf manure. J. Environ. Technol., 20, 765-768.

Wrigley, T.J., K.M. Webb, and H. Venkitachalm. 1992. A laboratory study of struvite precipitation after digestion of piggery wastes. Bioresource Technology, 41, 117-121.

Part IV

Using a Chemical Equilibrium Model to Predict Amendments Required to Precipitate Phosphorus as Struvite in Liquid Swine Manure

6. Introduction

The most common means of manure disposal is land application. This practice must be managed such that the application of manure-based nutrients is balanced by crop uptake. If manure application is based on nitrogen (N), then phosphorus (P) is often over applied. For example, production of corn at 150 bu/ac requires 150 lb of N per acre and 56 lb of P_2O_5/ac. Using published values for manure production; a swine "grower" operation will produce 0.42 lb/d/1000 pounds of N and 0.16 lb/day/1000 pounds of P (USDA-NRCS, 1992). By adding sufficient mass of this manure to match the N requirement means that over twice the required P_2O_5 will be added to the soil. A potential solution is to remove the excess P from manure slurries before (or during) land application.

There are a number of chemical and biological techniques available to reduce the concentration of orthophosphate (OP) in manure slurries (Rybicki, 1997; Jardin and Popel, 2001; Regy et al., 2001). One such technology is the immobilization of OP as magnesium ammonium phosphate hexahydrate, $MgNH_4PO_4 \cdot 6H_2O$ (struvite). Precipitation of P as struvite offers the potential to generate a concentrated fertilizer product (Nelson et al., 2000; Burns et al., 2001; Kalyuzhnyi et al., 2001). Struvite generated from manure has been used to fertilize crops (Greaves et al., 1999), and has been shown to be an effective source of N, magnesium (Mg^{2+}), and P for plant growth.

Thus, struvite production could reduce the P and N concentration of manure slurries and produce a nutrient-rich mineral precipitant. Therefore a goal of this project is to

develop a process that will enhance the formation of struvite such that manure slurries can be land applied on a N basis without the over application of P. The primary objective is to develop a continuous flow reactor that will remove OP while liquid manure is pumped from storage and is applied to the soil.

Previous research has shown that struvite solubility in swine manure is minimum in an 8.5 to 9.0 pH range (Buchanan et al., 1994). In most wastewater management systems, the availability of Mg^{2+} is the limiting factor in terms of struvite production (Çelen and Turker, 2001). Intuitively, increasing the pH and injecting Mg^{2+} should create optimum conditions for producing struvite and thereby reducing the P concentration. However, the chemical composition of swine manure slurries is complex and site specific. Determining the appropriate base and Mg^{2+} dose requires jar testing, which is expensive and time consuming to evaluate multiple combinations of base and Mg^{2+} amendments. This project proposes to use an equilibrium computer model to assist with the dose optimization. Relevant inputs were determined to be concentrations of OP, ammonia (NH_3), Mg^{2+}, calcium (Ca^{2+}), potassium (K^+), and pH from a wastewater, and then assist with the determination of the appropriate amounts of base and Mg^{2+}. Thus primary objective of this research was to determine if Visual Minteq 2.23 (Gustafsson, 2005) could be used to determine the reduction of OP in the mixture.

7. Chemical Modeling

Visual Minteq 2.23 is a chemical equilibrium computer program that has an extensive thermodynamic database that allows for the calculation of speciation,

solubility, and equilibrium of solid and dissolved phases of minerals in an aqueous solution (Gustafsson, 2005). This program is the Windows version of MINTEQA2 that was originally developed by the USEPA.

Several researchers have employed MINTEQA2 and/or Visual Minteq to study struvite formation. Buchanan et al., (1994) used MINTEQA2 to gain a better understanding of the availability of the Mg^{2+}, NH_4^+, and PO_4^{3-} ion at various pH concentrations. Miles and Ellis, (2001) used MINTEQA2 to model struvite formation with the goal of removing NH_4^+ from a wastewater solution. These authors determined that additional Mg^{2+} and P must be added to maximize the NH_4^+ removal. Also, since the model does not include struvite in its thermodynamic database, they determined equilibrium conditions manually for struvite at each pH value. Ali et al., (2003) employed Visual Minteq to determine that a Mg^{2+} ion selective probe would be the most appropriate real-time indicator of the struvite kinetics. From Ali et al., (2003), it could be inferred that Mg^{2+} could be measured before and after a continuous flow reactor to determine the Mg^{2+} mass removed via precipitation. They reported the initial task to run the Visual Minteq was to add struvite into the model database.

7.1. Model Modifications

The current edition of Visual Minteq does not include struvite in its database as mentioned before. However, Visual Minteq includes a database management tool that allows mineral species to be added or deleted. Struvite was added to the database by entering the solubility product constant ($pK_{sp} = 13.15$) and the equal molar ratio of Mg^{2+}, NH_4^+, PO_4^{3-} (Buchanan et al., 1994). Because Visual Minteq does not account for kinetics

and because struvite precipitation would presumably occur in a short reactor residence time, it was decided that slow-forming minerals should be removed from the database consideration. Using the composition of raw swine wastewater as input, the model's output was used to estimate what minerals could be formed. Literature concerning each of these minerals was reviewed to determine the likelihood of formation in a short period of time. If the precipitation rate was determined to be in order of hours or days, the mineral was removed from the database as potential precipitate in Visual Minteq.

Magnesium Phosphate Species

From solutions containing Mg^{2+}, NH_4^+, PO_4^{3-} species three possible magnesium phosphate species can crystallize: magnesium ammonium phosphate or struvite ($MgNH_4PO_4 \cdot 6H_2O$), magnesium hydrogen phosphate trihydrate or newberyite ($MgHPO_4 \cdot 3H_2O$), and bobierrite, $Mg_3(PO_4)_2 \cdot 8H_2O$. Struvite precipitates in the presence of Mg^{2+}, NH_4^+ and PO_4^{3-} when pH range is between 7 and 11 (Regy et al., 2001) and at Mg/Ca molar ratios>0.6 (Musvoto et al., 2000). Newberyite precipitates at high concentrations of Mg^{2+} and P but it precipitates at lower pH (<6.0) (Musvoto et al., 2000). Swine wastewater contains Mg^{2+} and a high concentration of P. Previous research demonstrated that $MgCl_2.6H_2O$ could be added to the solution to force the precipitation of struvite. Because of the excess of Mg^{2+} and PO_4^{3-} ions, it was decided to leave newberyite in the database. Mamais et al., 1994, reported that bobierrite has a slow precipitation rate. Therefore bobierrite was removed from the database.

Calcium Phosphate Species

Five calcium phosphate crystalline species can precipitate from solutions containing Ca and P. These are hydroxyapatite [HAP, $Ca_5(PO_4)_3OH$], tricalcium phosphate (whitlockite) [TCP, $Ca_3(PO_4)_2$], octacalcium phosphate [OCP, $Ca_8(HPO_4)_2(PO_4)_4.5H_2O$], monenite (DCP, $CaHPO_4$) and dicalcium phosphate dihydrate (brushite) (DCPD, $CaHPO_4.2H_2O$). Although formation of HAP and TCP are thermodynamically favored, the kinetics of this process is extremely slow (Musvoto et al., 2000; Ferguson and McCarty, 1971). It is also reported that the magnesium ion kinetically hinders the nucleation and subsequent growth of HAP (Amjad et al., 1984; Salimi et al., 1985; Abbona 1990) and OCP (Salimi et al., 1985; Abbona 1990). Also OCP is formed by the hydrolysis of DCPD in solutions of pH 5-6 (Koutsoukos 2001), thus, HAP, TCP, and OCP were removed from the database. Musvoto et al., (2000, reported that DCP is a thermodynamically stable species, thus it was kept in the database. Salimi et al., 1984, reported that the presence of Mg^{2+} has no detectable effect on the rate of DCPD crystallization so that dicalcium phosphate dihydrate (brushite) (DCPD, $CaHPO_4{\cdot}2H_2O$) was kept in the database.

Calcium Carbonate Species

The presence of Mg^{2+}, phosphates, and dissolved organics decrease the rate of precipitation of $CaCO_3$ (Musvoto et al., 2000). Because these three constituents are available in the swine waste water and because the HRT in the reaction is brief, calcium carbonate was removed from the database.

Other Salts

Two forms of magnesium carbonates are possible, magnesite ($MgCO_3$) and nesquehonite ($MgCO_3 \cdot 3H_2O$). Both species were kept in the database. Two mixed carbonates of Ca^{2+} and Mg^{2+} occur in nature, dolomite [$CaMg(CO_3)_2$] and huntite [$CaMg_3(CO_3)_4$]. However, the conditions under which these precipitate are not well understood and Mamais et al., 1994, reported that dolomite has a slow precipitation rate. Accordingly, these minerals were omitted from the database. Brucite, $Mg(OH)_2$ precipitates at high pH (Musvoto et al., 2000) thus it was not removed from the database.

7.2. Model Operation

During model setup, the Debye-Huckel Method for activity correction was selected because of its frequent use in the research literature (Buchanan et al., 1994), and oversaturated solids were allowed to precipitate. Further, the model was set to output the equilibrium concentrations of Mg^{2+}, Ca^{2+}, K^+, PO_4^{3-}, and NH_4^+, ionic strength of the solution and the mineral identity and amounts of precipitates formed at the end of the reaction.

The primary goal of using the chemical equilibrium model was to estimate the amount of amendments required to optimize phosphate precipitation. Thus, precipitation of struvite in a liquid swine manure was modeled under four conditions.

- Condition 1: Liquid swine manure plus sufficient NaOH to increase the pH to 8.5.
- Condition2: Liquid swine manure plus sufficient $MgCl_2.6H_2O$ to bring the Mg^{2+}:PO_4^{3-} molar ratio to 1.0:1.0, and additional NaOH to increase the pH to 8.5.

- Condition 3: Liquid swine manure plus sufficient $MgCl_2.6H_2O$ to bring the Mg^{2+}:PO_4^{3-} molar ratio to 1.5:1.0, and additional NaOH to increase the pH to 8.5.
- Condition 4: Liquid swine manure plus sufficient $MgCl_2.6H_2O$ to bring the Mg^{2+}:PO_4^{3-} molar ratio to 2.0:1.0, and additional NaOH to increase the pH to 8.5.

In order to have realistic values for model inputs, samples of liquid swine manure were analyzed and the resulting constituent concentrations were used as inputs to the model. Sample 1 and sample 2 were collected from the same facility at different times. Wastewater from a small East Tennessee swine finishing facility was used for this investigation. The facility houses on average 20 to 25 sows in their farrow to finish operation. The finish floor usually has 75 to 100 pigs. Wastewater was collected from the waste containment trench at the facility. Two samplings were required to have sufficient volume for all the experiments. For condition one, the component concentrations of the swine wastewater (Table 4.1) were entered plus a trial and error addition of NaOH or $[Na^+]$ and $-[H^+]$ (note that MINTEQ does not have hydroxide, OH^-, as an input component but rather it is simulated as negative proton, $-H^+$; the output does however include OH^-) until a pH of 8.5 was reached. For conditions two through four, various molar ratios of Mg^{2+} to PO_4^{3-} (with pH amended to 8.5) were examined.

8. Testing the Validity of Model's Results

In order to validate the results of the chemical model, the two liquid swine manure samples were used as a physical model. Samples from the holding pond were transported to the laboratory in 19-L sealed plastic buckets and stored at $4^{\circ}C$. Using the methods

Table 4.1. Composition of modeled raw swine wastewater.

Parameters	PO_4^{3-}	NH_4^+	Mg^2	Ca^{2+}	K^+	Alkalinity mg/L as $CaCO_3$	pH
Sample 1 (mg/L)	524 (±4)	1440 (±6)	57 (±8)	86 (±6)	555 (±3)	1500	6.84
Sample 2 (mg/L)	540 (±3)	1380 (±4)	101.2(±5)	110(±3)	880(±5)	1450	6.90
Standard deviation indicated in parenthesis, n=3.							

listed in Table 4.2, raw effluent was analyzed for Mg^{2+}, Ca^{2+}, K^+, PO_4^{3-}, SO_4^{2-}, NH_4^+, alkalinity and pH.

The precipitation experiments were carried out as batch reactions in 1000-mL Nalgene beakers. A waste volume of 800 mL was thoroughly mixed using a magnetic stir plate (Corning, Model PC-420, USA). The experiments took place at room temperature (approximately 25°C) and were performed in triplicate. The pH was adjusted with 5 N NaOH and the magnesium source was $MgCl_2 \cdot 6H_2O$ in 64% solution. After a 30-minute reaction time, samples of the treated wastewater were centrifuged in an IEC Clinical

Centrifuge (estimated 3000 g) for 5 minutes, (each centriguge tube was 40 mL) and then filtered with a 0.45-μm Millex Millipore syringe filter (Millipore Corporation Bedford, MA 01730 USA).

The solid phase was quantified by two methods. For each experiment, a portion of the solid phase was solubilized with concentrated HCl (final pH = 1.5) and then analyzed as described in Table 4.2. A second portion of each sample was dried at 35°C and then analyzed using X-ray diffraction (Siemens D-500, 1982) to identify the mineral species.

Table 4.2. Analytical methods used to measure dissolved to quantify liquid swine manure.

Constituent	Analytical Method
Mg^{2+}, Ca^{2+}, K^{+}	Atomic Absorption Spectrophotometery, Perkin Elmer Method for Analysis of Exchangeable Cations (AY-2) (Perkin Elmer, Norwalk, Connecticut).
PO_4^{3-}	Soluble phosphorus, Standard Method 4500-P E Ascorbic Acid Method (Standard Methods for the Examination of Water and Wastewater, 1998).
NH_4^{+}	Standard Method 4500-NH_3 B & C for Distillation and Titration (Standard Methods for the Examination of Water and Wastewater, 1998).
Alkalinity	Standard Method 2320 B titration method (Standard Methods for the Examination of Water and Wastewater, 1998)
pH	Calibrated pH electrode (Orion Model 720A, Boston)

9. Results and Discussion

9.1. Visual Minteq Results

The parameters presented in Table 4.1 were entered into the Visual Minteq model in two stages. As modeled, the raw swine wastewater had an Mg^{2+}:PO_4^{3-} molar ratio of 0.45:1.0 and a pH of 6.84. Initial pH and alkalinity were entered so that the model could provide the hydrogen ion and assuming the alkalinity was carbonate based. Having an estimate of the H^{+} concentration allowed for a better initial estimate of the required hydroxide addition.

By doing trial and error addition of NaOH (as [Na^{+}] and –[H^{+}]), we could then determine the mass of NaOH required to reach an 8.5 pH. For example, using sample 1, it was determined that 640 mg/L of NaOH was needed. Data were actually entered into the model as 368 mg/L of Na and -16 mg/L of H^{+}, which is equivalent to adding 0.016 M of

NaOH to the solution. In order to calculate the total CO_3^{2-} and H^+, which are shown in result-1, (Table 4.3), the output from the input-1, (Table 4.3) is needed. The model output and calculations can be seen in Appendix A.

As shown in Table 4.4, OP is predicted to be reduced by 65.8%. Visual Minteq estimated that the PO_4^{3-} was precipitated as $1.4x10^{-3}$ M $CaHPO_4$ (monetite) and as $2.3x10^{-3}$ M $MgNH_4PO_4 \cdot 6H_2O$ (struvite).

For conditions 2, 3, and 4, additional Mg^{2+} was added such that there was a 1.0:1.0, 1.5:1.0, and 2.0:1.0 molar ratios of Mg^{2+}:PO_4^{3-}. For each of these conditions, the amount of NaOH required for pH 8.5 was also determined.

For condition 2, a 1.0 Mg^{2+}: 1.0 PO_4^{3-} was needed. For this wastewater (sample 2), 0.00315 M of Mg^{2+} (in the form of $MgCl_2 \cdot 6H_2O$) was added. As shown in Table 4.5, condition 2 was estimated to provide a 93% reduction in soluble phosphorus. The model suggests that the lost phosphorus was consumed by struvite precipitation and that no other minerals will form. Further it was determined that 680 mg/L of NaOH will be needed to adjust the pH.

For condition 3, a surplus of magnesium is added to determine the effect on soluble phosphorus removal. In order to achieve a 1.5 Mg^{2+}:1.0 PO_4^{3-} ratio, 0.0060 M of Mg^{2+} was added to give a total magnesium concentration of 205 mg/L. As shown in Table 4.6, P reduction is predicted to be 99%. Also, the model predicted that 700 mg/L NaOH addition was required to obtain pH 8.5. Adding surplus magnesium likely

Table 4.3. Stepwise modeling procedure to determine mass of NaOH required to achieve pH 8.5.

Modeling Steps	**Modeled Parameters (mg/L)**									
	PO_4^{3-}	NH_4^+	Mg^{2+}	Ca^{2+}	K^+	Na^+	H^+	CO_3^{-2}	Alkalinity mg/L as $CaCO_3$	pH
Input-1	*Only alkalinity and pH are added in this stage*								1500	6.84
Result-1							47.5	2312.8	-	-
Inputs-2	524	1440	57	86	555	368	31.5*	2312.8	-	-
Results-2	178.8	1398.6	1.29	32.18	555	368	30.1	2312.8		8.50
* 47.5 – 16 = 31.5										

Table 4.4. Equilibrated mass distribution predicted by Visual Minteq after the addition of 640 mg/L of NaOH.

Component	Input Concentrations at (mg/L)	Output Solution Phase (mg/L)	Total Precipitated (mg/L)	Percent Precipitated
Ca^{2+}	86	32.18	53.8	62.5
CO_3^{2-}	2312.8	2312.8	0	0
H^+	31.5	30.1	0	0
K^+	555	555	0	0
Mg^{2+}	57	1.29	55.7	97.7
NH_4^+	1440	1398.6	41.3	2.8
PO_4^{3-}	524	178.8	345.1	65.8
Na^+	368	368	0	0
		Output Solid Phase		Mass
		$CaHPO_4$ (monetite)		190 mg/L
		$MgNH_4PO_4 \cdot 6H_2O$ (struvite)		563.9 mg/L

Table 4.5. Equilibrated mass distribution predicted by Visual Minteq after the addition of $MgCl_2.6H_2O$ (1.0 Mg^{2+}:1.0 PO_4^{3-}) and 680 mg/L of NaOH.

Component	Input Concentration (mg/L)	Output Solution Phase (mg/L)	Total Precipitated (mg/L)	Percent Precipitated
Ca^{2+}	110	110	0	0
CO_3^{2-}	2172.3	2172.3	0	0
H^+	26.7	26.7	0	0
K^+	880	880	0	0
Total Mg^{2+}	136	7.4	128.6	94.5
NH_4^+	1380	1284.6	95.4	6.9
PO_4^{3-}	540	37.6	502.3	93
Na^+	391	391	0	0
		Output Solid Phase		Mass
		$MgNH_4PO_4 \cdot 6H_2O$ (struvite)		1299 mg/L

Table 4.6. Equilibrated mass distribution predicted by Visual Minteq after the addition of $MgCl_2 \cdot 6H_2O$ (1.5 Mg^{2+}:1.0 PO_4^{3-}) and 700 mg/L of NaOH.

Component	Input Concentration (mg/L)	Output Solution Phase (mg/L)	Total Precipitated (mg/L)	Percent Precipitated
Ca^{2+}	110	110	0	0
CO_3^{2-}	2172.3	2172.3	0	0
H^+	26.2	26.2	0	0
K^+	880	880	0	0
Total Mg^{2+}	205	67.9	137.2	66.8
NH_4^+	1380	1278	101.6	7.4
PO_4^{3-}	540	4.7	535.2	99
Na^+	402.5	402.5		
		Output Solid Phase		Mass
		$MgNH_4PO_4 \cdot 6H_2O$ (struvite)		1373 mg/L

caused magnesium hydroxide (MgOH) to form and thus require a higher concentration of NaOH to be added. Struvite is the only mineral predicted to form.

For condition 4, an excessive surplus of magnesium was examined to determine the effect on phosphorus precipitation. In order to achieve a 2.0 Mg^{2+}:1.0 PO_4^{3-} ratio, 0.0087 M of Mg^{2+} was added to bring the magnesium concentration to 264 mg/L. As shown in Table 4.7, there is a 99.5% reduction in soluble phosphorus. The model predicted that 800 mg/L NaOH of was required to obtain pH 8.5 and that struvite was the only mineral formed.

Minteq reports total component concentrations, which includes both free, complexed with other compounds. Thus, H^+ is more than just the proton concentration (Table 4.4 through 4.7).

9.2. Model Verification Results

9.2.1. Laboratory Results

The conditions that were modeled by Visual Minteq were tested in the laboratory. The first condition was to increase the wastewater pH to 8.5 and determine the effect on the soluble phosphorus concentration. Using a pH probe and a stir plate, NaOH was added until the solution pH was 8.5. It was determined that 449 (±6.3) mg/L was required to increase the swine wastewater pH 6.84 to 8.5. Concentrations of the analyzed parameters for each of the conditions are shown in Tables 4.4 and 4.5.

Table 4.7. Equilibrated mass distribution predicted by Visual Minteq after the addition of $MgCl_2 \cdot 6H_2O$ (2.0 Mg^{2+}:1.0 PO_4^{3-}) and 800 mg/L of NaOH

Component	Input Concentrations	Output Solution Phase (mg/L)	Total Precipitated (mg/L)	Percent Precipitated
Ca^{2+}	86	85.9	0	0
CO_3^{2-}	2312.8	2312.8	0	0
H^+	27.5	27.5	0	0
K^+	555	555	0	0
Total Mg^{2+}	264	130.5	133.5	50.5
NH_4^+	1440	1340.9	99	6.8
PO_4^{3-}	524	2.5	521.4	99.5
Na^+	460	460	0	0
		Output Solid Phase		Mass
		$MgNH_4PO_4 \cdot 6H_2O$ (struvite)		1324 mg/L

As shown in Table 4.8a, in the first condition, adjusting the pH of the wastewater to 8.5 with NaOH reduced the PO_4^{3-} concentration by 55%. In the second condition, the addition of $MgCl_2.6H_2O$ in conjunction with 560.7(±6) mg/L NaOH to a pH of 8.5 (Mg^{2+}:PO_4^{3-} molar ratio 1.0:1.0) reduced the PO_4^{3-} concentration by an average of 98%.

In the third condition, the addition of $MgCl_2.6H_2O$ to Mg^{2+}: PO_4^{3-} molar ratio 1.5:1.0 in conjunction with 622(±1.4) mg/L NaOH to a pH of 8.5, reduced the PO_4^{3-} concentration by an average of 94% (Table 4.8b). By increasing Mg:PO4 molar ratio to 2.0:1.0, the PO_4^{3-} concentration was reduced by an average of 98% and required 775.6 (±2.9) mg/L NaOH, to increase pH from 6.84 to 8.5.

9.2.2. Mass Balance Analysis

In order to fully quantify the removal of OP from the liquid manure, suspended and settled precipitants were analyzed for P content. This procedure also allowed for a better

Table 4.8. Composition of raw and treated swine wastewater (Standard deviation in parenthesis, n=3). (a) Condition 1 and 2 (b) Condition 3 and 4

Parameters	**Untreated (raw) waste (mg/L)**	**(Condition 1)**		**(Condition 2)**	
		Concentration (mg/L)	**% reduction**	**Concentration (mg/L)**	**% reduction**
PO_4^{3-}	524 (±4)	234(±6)	55	8(±4)	98
NH_4^+	1440 (±6)	918(±5)	36	783(±4)	46
Mg^{2+}	57(±8)	5(±5)	91	-	-
Mg^{2+}(following $MgCl_2$ addition)	264(±5)	-	-	194(±3)	40
Ca^{2+}	86(±6)	38(±4)	56	88(±6)	0
K^+	555(±3)	574(±3)	0	565(±6)	0
Alkalinity (mg/L as $CaCO_3$)	1500	1500	0	1500	0
pH	6.84	8.50		8.50	

(a)

Parameters	**Untreated (raw) waste (mg/L)**	**(Condition 3)**		**(Condition 4)**	
		Concentration (mg/L)	**% reduction**	**Concentration (mg/L)**	**% reduction**
PO_4^{3-}	540 (±3)	32.2(±6)	94	15(±3)	97
NH_4^+	1380 (±6)	800.4(±5)	42	690(±4)	50
Mg^{2+}	101.2(±4)	-	-	-	-
Mg^{2+}(following $MgCl_2$ addition)	136	15.6	88	79.4(±3)	61
Ca^{2+}	110(±6)	112(±7)	0	110(±6)	0
K^+	880(±5)	895(±5)	0	890(±4)	0
Alkalinity (mg/L as $CaCO_3$)	1450	1450	0	1450	0
pH	6.90	8.50		8.50	

(b)

understanding of the nitrogen loss due to NH_3 volatilization. Samples of the solid phase were dissolved in acid and analyzed for the constituent ions. Table 4.9 provides the results from the condition 1 study. The addition of NaOH without any additional magnesium created a precipitant molar ratio of Mg^{2+}:NH_4^+:PO_4^{3-} was 1:1:1.5 as compared to the molar ratio of 1:1:1 for struvite. The increased amount of PO_4^{3-} in the precipitate implies that minerals other than struvite were present. Based on the observed Ca^{2+} reduction it is likely that a Ca^{2+}/PO_4^{3-} compound was formed. The molar ratio of Ca^{2+}:PO_4^{3-} was 1.1:1. This is consistent with the presence of monetite ($CaHPO_4$) because its theoretical Ca^{2+}:PO_4^{3-} molar ratio is 1:1. Also, as it is shown in Table 4.9, mass of $Ca^{2+}$and PO_4^{3-} recovered is slightly higher than the initial mass. As discussed in the next section, this is likely due to brushite ($CaHPO_4.2H_2O$), which was suspended in the untreated wastewater.

The mass balance confirms that the 98% of the Mg^{2+} is accounted for in either the supernatant or the recovered precipitate. However, 35% of the NH_4^+ in the influent was unaccounted for in the resulting supernatant and precipitate. The discrepancy in the ammonia mass balance is attributed to the volatilization losses. Significant ammonia losses were expected due to the increased pH and stirring over a 30-minute period in an open container. Similarly, Çelen and Turker (2001) reported that at pH 8.5, 11% and at

Table 4.9. Mass Balance Analysis (no $MgCl_2$ addition at pH 8.5)

	PO_4^{3-} (mg)	Mg^{2+} (mg)	NH_4^+ (mg)	Ca^{+2} (mg)
Untreated waste (800 mL)	419	46	1152	69
Supernatant (786mL)	184	4	722	30
Precipitate (1.84 g/100 mL)	250	41	30	42
Mass In (Untreated waste)	419	46	1152	69
Mass Out (Super.+Precip.)	434	45	752	72
Difference	-3.6%	2.2%	35%	-4.3%

pH 9.0, 17.9% ammonia was lost to air from the effluent of anaerobic digester treating molasses based industrial wastewater.

The mass balance analyses for the 2.0 Mg:1.0 PO_4^{3-} molar ratio and NaOH amended experiment is shown in Table 4.10. Theoretically, the molar ratio of struvite is Mg^{2+}:NH_4^+:PO_4^{3-} is 1:1:1. In the precipitate, the ratio was 1.1:0.9:1.0 suggesting that struvite was formed. The PO_4^{3-}, Mg^{2+}, and NH_4^+ mass balance differences were 2.4%, 6%, and 40% respectively. In this test, 6.4% of the ammonia can be accounted for in the precipitate as compared to only 2.6% in the previous experiment. The 40% discrepancy in ammonia is again attributed to volatilization. Visual Minteq does have some capability to handle volatilization through the use of partial pressures. Because there was an infinite air space above the reactor, ammonia loss is expected to be controlled by mass transport rather than equilibrium. Under these conditions, it is to be expected that the computer model will show significant error.

9.2.3 X-ray Diffraction Results

In order to confirm the presence of minerals predicted by Visual Minteq, three precipitant samples were subjected to X-ray diffraction. Mineral solids in the raw (untreated) wastewater were determined to be brushite ($CaHPO_4.2H_2O$) (Figure 4.1). This

Table 4.10. Mass Balance Analysis ($MgCl_2$ addition at pH 8.5, Mg^{2+}:PO_4^{3-} molar ratio is 2:1).

	PO_4^{3-} (mg)	Mg^{2+} (mg)	NH_4^+ (mg)
Raw waste (800 mL)	419	46	1152
$MgCl_2$ was added Mg^{2+} (mg)		211	
Supernatant (783mL)	6	152	613
Precipitate (2.1 g/100 mL)	403	90	74
Mass In (Untreated waste)	419	257	1152
Mass Out (Super.+Precip.)	409	242	687
Difference	2.4%	6%	40%

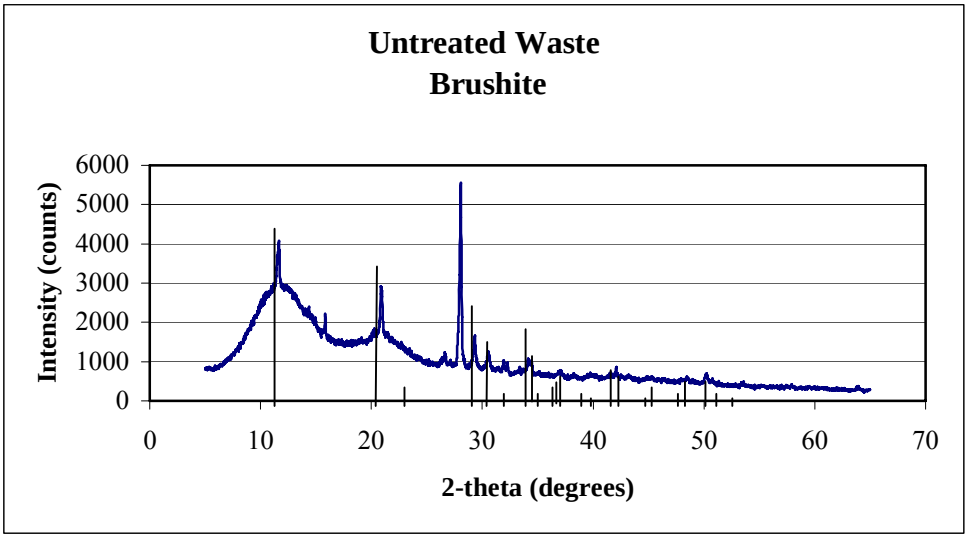

Figure 4.1. X-ray diffraction detecting the presence of Brushite in the raw liquid swine manure.

was not unexpected because brushite precipitates at pH<7.0 (Wentzel et al., 2001) and the raw wastewater pH was 6.84.

The second sample was extracted from NaOH amended wastewater (pH=8.5). X-ray diffraction results show that the mineral solids contained struvite, monetite, and brushite (Figures 4.2a and 4.2b). Visual Minteq predicted that struvite and monetite should be present. It is assumed that brushite is present because it was found in the raw wastewater. This mineral species is not thermodynamically stable at this pH and would likely dissolve with time.

The third X-ray diffraction analysis determined that struvite was present in the wastewater sample amended with NaOH and Mg^{2+} (2 Mg^{2+}:1PO_4^{3-}) (Figure 4.3). Although Visual Minteq predicted that struvite would be the only precipitant, we expected to find brushite because of its presence in the raw wastewater and in the NaOH

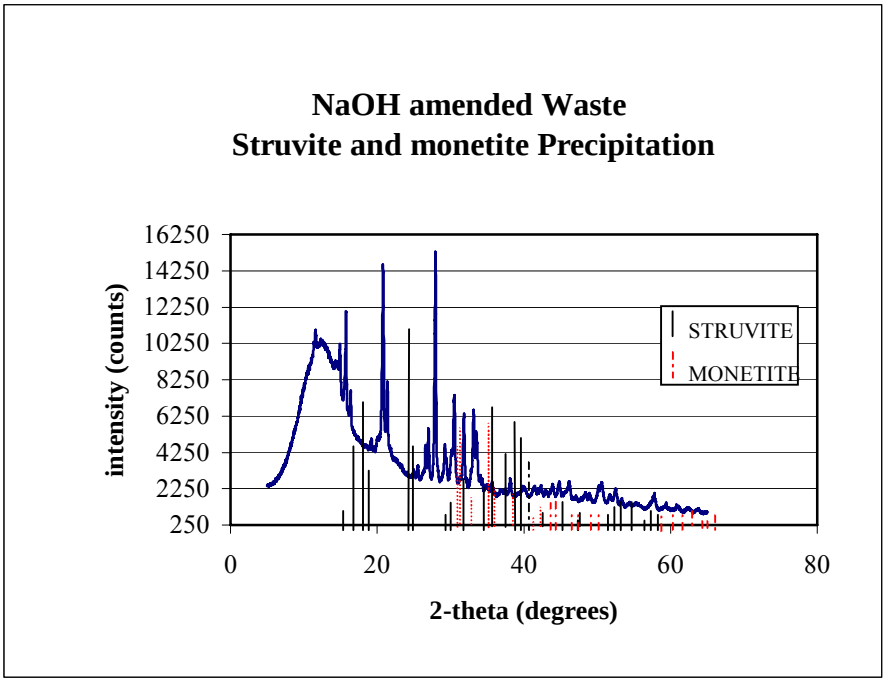

(a)

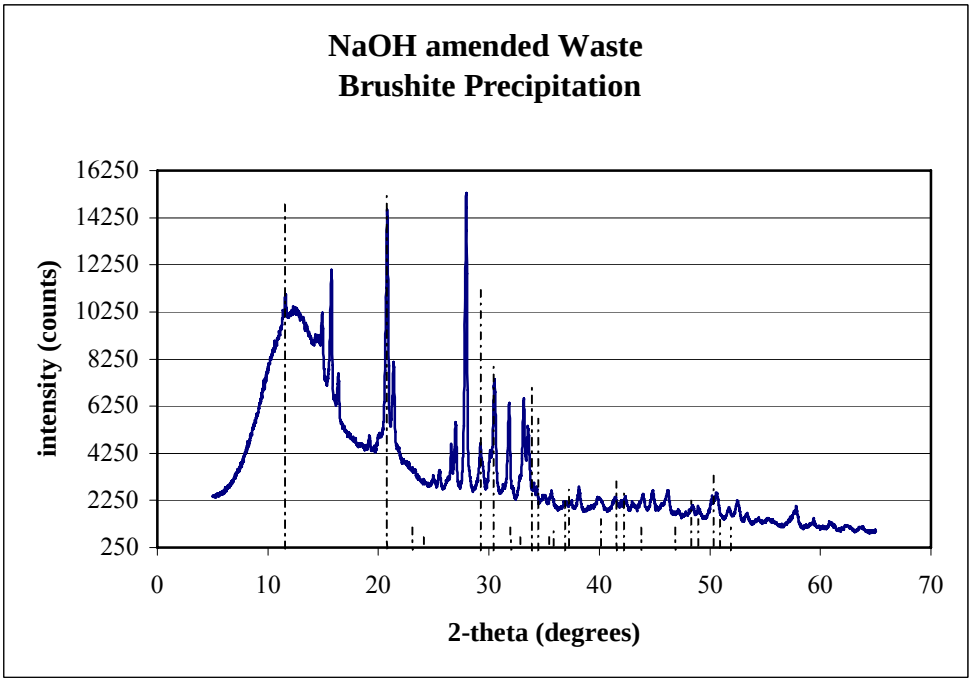

(b)

Figure 4.2. Precipitant from the NaOH addition experiment (a) Struvite Monetite and (b) Brushite

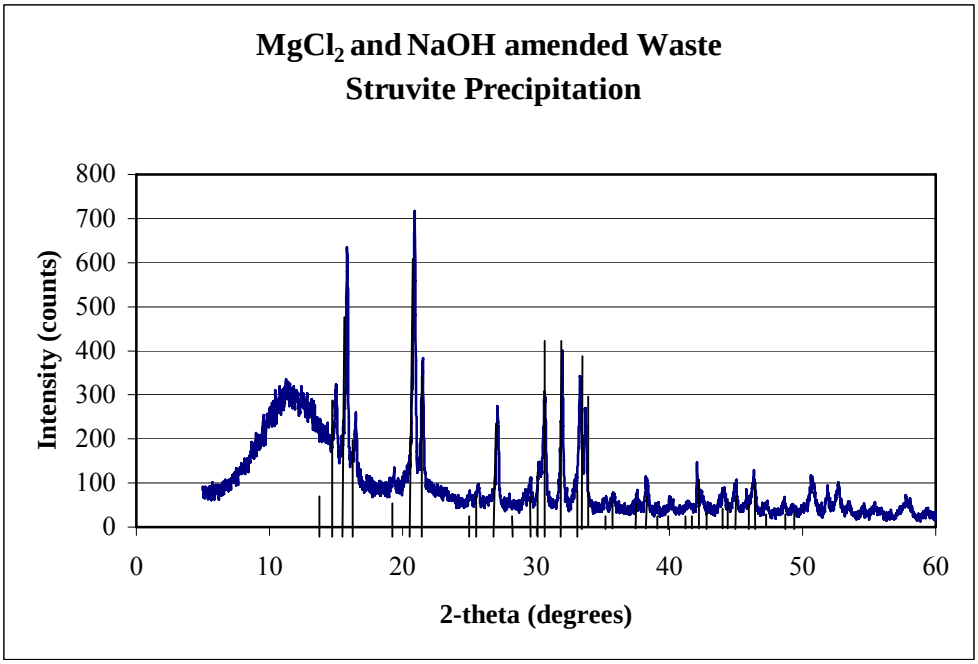

Figure 4.3. $MgCl_2$ and NaOH amended Waste Struvite Precipitation ($2Mg^{2+}$:$1PO_4^{3-}$).

amended wastewater. As mentioned previously, brushite is not stable under these conditions, and sufficient brushite may have dissolved to be below the detection of X-ray diffraction.

In Figure 4.1, 4.2 a-b, some peaks could not be identified by personnel with expertise in X-ray diffraction.

10. Comparison of Visual Minteq Model and Laboratory Results

Table 4.11 shows the percentage of element removal obtained from the experiment and the model. Because of the limited number of samples (n=3), the Wilcoxon rank sum

Table 4.11. Comparison of modeled reaction versus actual experimentation results.

	Predicted PO_4^{3-} Removal (%)	**Actual PO_4^{3-} Removal (%)**	**Predicted NaOH Required (mg/L)**	**Actual NaOH Required (mg/L)**	**Mineral Species Predicted**	**Mineral Species Found**
Condition 1	67.4	55.0	640	560.9	Monetite Struvite	Monetite Brushite Struvite
Condition 2	93.5	94.0	640	560.7	Struvite	NA
Condition 3	99.0	97.0	680	622	Struvite	NA
Condition 4	99.5	98.0	800	775.6	Struvite	Struvite
Untreated waste						Brushite

test was used to compare phosphorus removal between Visual Minteq model and laboratory results (Ott and Longnecker, 2001; EPA 2000). The null hypothesis was accepted (p=0.05) and it was therefore concluded that there is no difference between the model and experimental results, although the statistical power is low due to the small number of samples involved.

Model simulations and laboratory experiments showed that increasing pH to 8.5 with no magnesium addition reduced the soluble phosphorus in the swine wastewater. Laboratory experiments resulted in a 55% reduction in OP while the Visual Minteq modeling predicted 62% reduction.

Both experimental and model data indicated that in swine wastewater, magnesium is the limiting constituent in the formation struvite. In order to maximize the reduction of soluble phosphorus, a magnesium source (such as $MgCl_2.6H_2O$) is required. Both Visual Minteq and laboratory experiments showed a 94% reduction in the soluble phosphorus by creating equal molar Mg^{2+}:PO_4^{3-} ratio and by increasing the pH to 8.5. By adding more

magnesium, additional soluble phosphorus can be removed. However, it is likely that the small increase in phosphorus recovery will not justify the additional magnesium cost.

As shown in Table 4.11, mineral species predicted by model and found by experimentation are in agreement except for condition 1. The model did not predict brushite. Because the pH of the untreated waste was 6.84, it is hypothesized that brushite was already in the raw wastewater and did not dissolve until additional magnesium was added. Also as it is shown at the same table, Visual Minteq predicted NaOH requirement that is about between 3-14% greater than the experimentally determined NaOH to reach pH 8.5.

As seen in Table 4.11, predicted NaOH is slightly higher than the actual NaOH for conditions 2-4. The reason why the predicted amount is higher is likely due to differences between the measured alkalinity and input alkalinity. The laboratory measured alkalinity will pick up anything that can react with proton which would include un-ionized ammonia phosphoric acid, and solid phases like $CaHPO_4$ or $CaCO_3$. However, Visual Minteq assumes all the alkalinity is carbonate alkalinity and that is what was assumed when estimating the carbonate and proton for the model input. This assumption overestimates the carbonate and predicts more NaOH is needed to react with the HCO_3^- to raise the pH. For example, at pH 6.84, above 0.4% of ammonia is unionized and would be titrated as about 15 mg/L of alkalinity. Ammonia loses due to volatilization and organic acids may also contribute.

Since all the alkalinity was originally assumed to be carbonate alkalinity, a virtual titration was run in the Visual Minteq to find out if there were other forms of alkalinity

and to determine the validity of the assumption. The first step in performing a virtual titration was to enter the parameters presented in Table 4.12. Alkalinity and pH cannot be fixed in the water to be titrated. Therefore, a carbonate concentration and a proton concentration that gives the correct initial pH were entered into the model. Then under the multistep menu the virtual titration option is selected. Because 0.02N H_2SO_4 was used to titrate, proton and sulfate components at a concentration equivalent to H_2SO_4 were entered in the model. During the titration 25.5 mL H_2SO_4 was consumed by 17 mL swine wastewater to reach an end point pH of 4.4. These values and other parameters were entered in the model (Table 4.12). In order to investigate what other species might be contributing to alkalinity, the new value for carbonate was used in Minteq and the concentration of all alkalinity causing species calculated as shown in Table 4.13. Alkalinity (eq/L) was calculated by multiplying the concentration and charge values of the species.

Total alkalinity is 0.0359 eq/L or 1795 mg/L. If only the carbonate species are considered, then carbonate alkalinity becomes 0.0303 eq/L or 1514 mg/L

After obtaining the new total carbonate concentration, model was re-run with this value as an initial carbonate concentration. Then a proton concentration, which gives the initial pH, was found by trial and error method (Table 4.14). It was determined that 0.015M of NaOH should be added to the solution which is equivalent to adding 600 mg/L. The initial assumed total carbonate concentration was 2312 mg/L, however; virtual titration determined that, total carbonate was 2190 mg/L. It shows that there is not much difference when the new carbonate concentration was used.

Table 4.12. Stepwise modeling procedures to determine CO_3^{2-} concentration from virtual titration.

Modeling Steps	**Modeled Parameters (mg/L)**											
	PO_4^{3-}	NH_4^+	Mg^{2+}	Ca^{2+}	K^+	H^+	CO_3^{2-}	H^+ from H_2SO_4 (mol/L)	SO_4^{2-} from H_2SO_4 (mol/L)	Titrated Solution (mL)	Titrant (mL)	pH
Inputs-1	524	1440	57	86	555	54	2312		-			-
Results-1												6.8
Inputs-2 (titration)	524	1440	57	86	555	54	2190	0.02	0.01	25.5	17	
Results-2												4.4

Table 4.13. Visual Minteq output

Species	Concentration (mol/L)	Total alkalinity (eq/L)
$Ca(NH_3)_2^{+2}$	2.08E-11	
Ca^{+2}	0.000461	
$CaCO_3$ (aq)	2.53E-06	
$CaH_2PO_4^+$	8.45E-06	8.4517E-06
$CaHCO_3^+$	7.93E-05	0.000079281
$CaHPO_4$ (aq)	5.66E-05	0.000113258
$CaNH_3^{+2}$	1.85E-07	1.8457E-07
$CaOH^+$	3.34E-10	3.3423E-10
$CaPO_4^-$	1.23E-06	2.4586E-06
CO_3^{-2}	1.72E-05	0.000034406
H^{+1}	1.83E-07	
$H_2CO_3^*$ (aq)	0.008255	
$H_2PO_4^-$	0.001803	0.0018029
H_3PO_4	3.11E-08	
HCO_3^-	0.029946	0.029946
HPO_4^{-2}	0.001429	0.0028586
K^{+1}	0.014098	
K_2HPO_4 (aq)	9.63E-07	1.92558E-06
$K_2PO_4^-$	4.56E-11	4.5639E-11
KH_2PO_4 (aq)	3.17E-05	0.000031655
$KHPO_4^-$	6.22E-05	0.000062239
KOH (aq)	1.23E-09	1.2322E-09
KPO_4^{-2}	1.19E-09	2.3718E-09
$Mg(NH_3)_2^{+2}$	1.41E-10	2.8242E-10
Mg^{+2}	0.001529	
$Mg_2CO_3^{+2}$	3.54E-08	7.0824E-08
$MgCO_3$ (aq)	4.31E-06	8.6272E-06
$MgHCO_3^+$	0.000223	0.00022337
$MgHPO_4$ (aq)	0.000266	0.00053272
$MgOH^+$	2.16E-08	2.1579E-08
$MgPO_4^-$	6.55E-08	6.5478E-08
NH_3 (aq)	0.000224	0.00022403
NH_4^{+1}	0.079284	
OH^-	8.28E-08	8.2759E-08
PO_4^{-3}	1.16E-08	3.4692E-08
	Total (eq/L)	**0.0359**

Table 4.14. Stepwise modeling procedure to determine mass of NaOH required to achieve pH 8.5.

Modeling Steps	**Modeled Parameters (mg/L)**								
	PO_4^{3-}	NH_4^+	Mg^2	Ca^{2+}	K^+	Na^+	H^+	CO_3^{-2}	pH
Input-1	-	-	-	-	-	-	45	2190	
Result-1									6.84
Inputs-2	524	1440	57	86	555	345	30*	2190	-
Results-2									**8.50**
* 45 – 15 = 30									

11. Conclusions

Laboratory experiments and model results showed that by only increasing pH in swine wastewater, it was possible to significantly reduce the quantity of OP. However, experiment and model data indicated that addition of $MgCl_2 \cdot 6H_2O$ (as an Mg^{2+} source) was required for optimum recovery of OP. Orthophosphate reductions in condition 1, 2, 3, and 4 were 67.4, 93.5, 99, and 98%, respectively. In the precipitate recovered from the NaOH addition experiment, condition 1, struvite, monetite and brushite were detected by X-ray diffraction. When NaOH and $2Mg^{2+}$:$1PO_4^{3-}$ was added to the wastewater, X-ray diffraction analysis showed struvite was formed (condition 4). Magnesium addition and increasing pH to 8.5 in the presence of high PO_4^{3-} and NH_4^+ is an ideal condition for precipitation of struvite. By mass balance, all these minerals were detected. When these minerals were included in the model, the results agreed with the experimental data except for condition 1. The results of this project indicate that a chemical equilibrium model can be used to predict the amendments required to reduce OP from swine wastewater by

forcing the precipitation of struvite and other phosphate-bearing minerals. Once the model runs successfully, it is very easy to run a simulated optimization study.

References

Abbona, F. 1990. Crystallization of calcium and magnesium phosphates from solutions of low concentration. *Journal of Crystal Growth,*104: 661-671.

Agricultural Waste Management Field Book, part 651 1992. Agricultural Waste Characteristics, USDA-NRCS.

Amjad, Z., P. G. Koutsoukos, and G. H. Nancollas. 1984. The crystallization of hydroxyapatite and fuorapatite in the presence of magnesium ions. *Journal of Colloid Sciences and interface science*, 101(1): 250-256.

Buchanan, J.R., C.R. Mote, and R.B. Robinson. 1994. Thermodynamic of Struvite Formation. *American Society of Agricultural Engineers*, 37(2): 617-621.

Burns, R.T., L.B Moody, F.R. Walker, and D.R. Raman. 2001. Laboratory and in-situ reductions of Soluble Phosphorous in Liquid Swine Waste Slurries. *Environ. Technol.,* 22(11): 1273-1278.

Çelen, I. and M. Türker 2001. Recovery of ammonia from anaerobic digester effluents. *Environ. Technol.,* 22(11), 1263-1272.

EPA. 2000. Guidance for Data Quality Assessment: Practical Methods for Data Analysis. EPA QA/G-9. Available at: http://www.epa.gov/quality1/qs-docs/g9-final.pdf. Accessed July, 2000.

Ferguson, J. F. and L. McCarty. 1971. Effect of carbonate and magnesium on calcium phosphate precipitation. *Environmental Sci. and Technol.,* 5(6), 534-540.

Greaves, J., P. Hobbes, D. Chadwick, and P. Haygarth. 1999. Prospects for the recovery of phosphorus from animal manures: a review. *Environ. Technol*., 20, 697-708.

Gustafsson, J. P. 2005. Visual MINTEQ, ver 2.32. Royal Institute of Technology, Stockholm, Sweden, Dept. Land and Water Resources Engineering. http://hem.bredband.net/b108693

Jardin, N. and H.J. Popel. 2001. Refixation of Phosphates Released During Bio-P Sludge Handling as Struvite or Aluminium Phosphate, *Environ. Technol.*, 22 (11): 1253-1262.

Kalyuzhnyi, S., V. Skylar, A. Epov, I. Arkhipchenko, I. Barboulina, O. Orlova, and A. Klapwijk. 2001. Phosphate recovery via precipitation from anerobically treated pig manure wastewater. *Proceedings of the 2nd International Conference on Phosphorus Recovery for Recycling from Sewage and Animal wastes.* Noordwijkerhout, Holland. March 12-14.

Koutsoukos, P.G. 2001. Current knowledge of calcium phosphate chemistry and in particular solid surface-water interface interactions. *Proceedings of the 2nd International Conference on Phosphorus Recovery for Recycling from Sewage and Animal wastes,* 1-11. Noordwijkerhout, Holland. March 12-14.

Nelson, N.O., R.L. Mikkelsen, and D.L. Hesterberg. 2000. Struvite formation to remove phosphorus from anaerobic swine lagoon effluent. *Proceedings of the 8th International Symposium on Animal, Agricultural and Food Processing Wastes.* October. Des Moines, Iowa. J.A. Moore (ed), ASAE Publications. St. Joseph, MI.

Mamais, D., P.A Pitt, Y.W. Cheng, J. Loiacono, and D. Jenkins. 1994. Determination of ferric chloride dose to control struvite precipitation in anaerobic sludge digesters. *Wat. Environ. Res.,* 66, 912-918,

Musvoto, E.V., M.C. Wentzel. and G.A. Ekama 2000. Integrated Chemical-Physical Processes Modelling-II. Simulating Aeration Treatment of Anaerobic Digester Supernatants. *Wat. Res.* 34, 1857-1867.

Ott, R. L., and M. Longnecker. 2001. *Statistical Methods and Data Analysis*. 5th ed. USA: Duxbury.

Regy, S., D. Mangin, J.P. Klein, and J. Lieto. 2001. Phosphate Recovery by Struvite Precipitation in a Stirred Reactor, *Centre Europeen d'Etudes des Polyphosphates*.

Rybicki, S. 1997.Phosphorous Removal From Wastewater A Literature Review in: advanced wastewater treatment report No 1. *Report Division of Water Resources Engineering Department of Civil and Environmental Engineering Royal Institute of Technology* 13-42.

Salimi, M.H., J.C. Heughebaert, and G.H. Nancollas. 1985. Crystal growth of calcium phosphates in the presence of magnesium ions, *Langmuir,* 1, 119-122.

Standard Method for the Examination of Water and Wastewater, 20th ed. 1998. American Public Health Association/ American Water Works Association / Water Environment Federation, Washington DC, USA.

Wentzel, M.C., E.V. Musvoto, and G.A Ekama. 2001. Application of integrated chemical-phsical processes modelling to aeration treatment of anaerobic digester liquors. *Environ. Technol,* 22(11), 1287-1293.

Part V

Effect of Hydraulic Retention Time in a Continuous Flow Reactor on Orthophosphate Removal from Swine Wastewater

12. Introduction

Orthophosphate (OP) can be removed from organic waste streams by the precipitation and recovery of struvite ($MgNH_4PO_4$), a slightly soluble fertilizer. Although struvite precipitation is well understood (Buchanan et al., 1994; Çelen and Türker, 2001; Burns et al., 2001) only a few researchers have scaled this technology beyond the laboratory.

A commercial process that recovers phosphorus (P) as struvite is the Unitika phosnix process used in Japan (Ueno and Fujii, 2001). Phosnix adds Mg^{2+} and uses an air-lift column to provide pH adjustment and agitation. In a side stream process, digested sludge supernatant is fed into the base of the reactor and mixed with magnesium hydroxide in order to achieve the required molar ratio with P. A blower forces air into the base of the column to ensure complete mixing and suspension of the growing particles. These particles grow and sink to the base of the reactor. In Australia, a 143 L pilot–scale reactor produced 320 g/d of dry struvite and achieved a 94% OP removal from anaerobic digester sidestreams. Their process is based on an air agitated column reactor, with ancillary chemical dosing equipment. Anaerobic digester effluent is fed into the base of the tower where it is mixed with magnesium solution to provide a Mg:P molar ratio of 1:1.3. Alkali is dosed to ensure a pH range of 8.5-9. Air sparged into the base of the column provides agitation and suspension of the growing particles. Larger particles sink to the base of the tower where they are periodically removed (Much and Barr, 2001). In England, Jaffer et al., (2002) obtained 97% P removal from anaerobic digester effluent in a pilot plant. The average influent flow rate to the pilot plant and HRT were 20 mL/min

and 3 hours, respectively. Peristaltic pumps were used to feed anaerobic digester effluent and magnesium chloride into the reactor. An aquarium aeration unit was used to adjust pH by CO_2 evolution.

Pilot and full-scale struvite recovery systems have been constructed to remove OP from animal manures. In the Netherlands, two different full-scale plants for the recovery of struvite from animal wastewater have been built. Dutch regulations require that the maximum allowable P-concentration in effluent discharged to a sewage treatment plant is 30 mg/L. Schuiling and Andrade (1999), installed a full scale plant that treats 115,000 m^3 of calf manure annually to recover struvite and reduce sludge volume. They have been successful at keeping the P concentration below the 30 mg/L limit. The other full scale plant in Netherlands, Thermhos International, recovers K-struvite (KNH_4PO_4) from calf manure in the company's industrial thermal P production process (Shipper and Verhoek 2004).

Bowers and Westerman, (2003) installed a cone-shaped continuous-mode fluidized bed to remove P from livestock lagoon effluent in North Carolina, USA. A chamber at the bottom of the cone is used to collect particles that can no longer be held in suspension. When the product collector is full, the reactor must be shut down to remove product. In these experiments, anhydrous ammonia was used to raise the pH and MgO served as the Mg source. Raw lagoon liquid was introduced at the bottom of the crystallizer. The pH was not controlled. The formed crystals were collected and analyzed for Mg^{2+}, NH_4^+, and PO_4^{3-}. The results indicated that the product was 88% struvite.

Suzuki et al., (2002) installed a pilot plant in Japan for the treatment of swine wastewater. Essentially, this reactor is a circular primary settling tank except that aeration is carried out in a center column. The pH was increased to 8.5 by aeration and no Mg^{2+} was added in the experiments. They obtained 65% of PO_4^{3-}, 51% of Mg^{2+} and 34% of Ca^{2+} removal from the swine wastewater when the hydraulic retention time (HRT) was 4.1 hours. The settled precipitant was assumed to be struvite and hydroxyapatite, ($Ca_5(PO_4)_3OH$, HAP).

Another pilot plant application using swine wastewater was tested in Canada (Laridi et al., 2004). The pilot-scale batch reactor consisted of two plexiglass columns, one inside the other. The inner column was the reaction zone, and the exterior column was the settling zone. Sodium hydroxide was used to adjust the pH to 9.0 and no additional Mg^{2+} was added. Researchers claimed that 99% of the OP was removed when HRT was 1 hour.

Much of the previous work has focused on the conditions that favor struvite precipitation. However, less attention has been applied to reactor designs. One important design parameter is the hydraulic retention time. Several of the above listed citations used an hour or greater for HRT. A desirable outcome of this project is to develop a continuous flow reactor is needed that will produce struvite while liquid swine manure is being transferred to a land application site. Therefore, an optimized HRT is needed to minimize the volume of the reactor.

The objective of this study was to evaluate the HRT with a laboratory-scale continuous reactor for OP removal from swine wastewater

13. Materials and Methods

13.1. Reactor Description

A laboratory scale continuous reactor was designed and constructed. The main part of the reactor was a 5.6 L conical plastic vessel that was 43.7 cm height, had a 6 cm bottom diameter, and a 18.5 cm top diameter. The treatment volume was 4.9 L. At the bottom of the reactor, a 180 mL precipitant collector was added. All parts of the system are shown in the Figure 5.1. Conical up flow reactors have been used by several researchers (Bowers and Westerman, 2003; Jaffer et al., 2002; Munch and Barr, 2001).

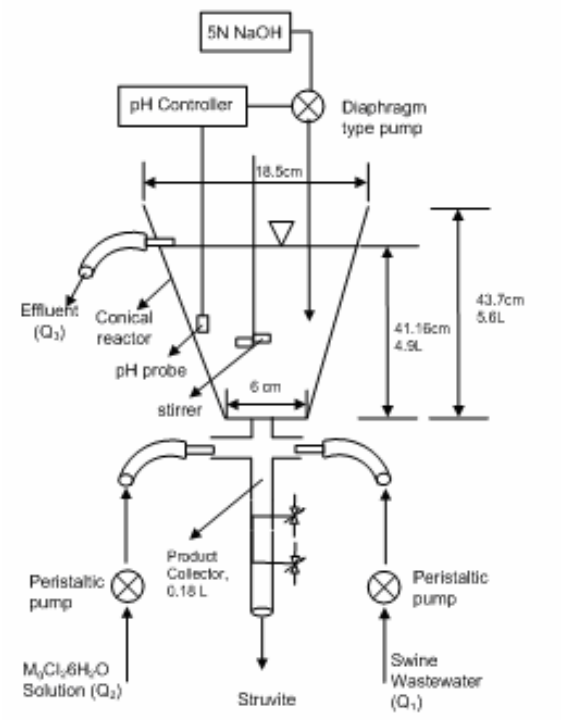

Figure 5.1. The laboratory scale continuous reactor (Drawn by Mr. Renbin Zhou).

The hydraulic retention time was changed by varying the flow rate through the reactor. The raw swine wastewater and the Mg^{2+} solution were introduced at the bottom of the cone section, and an overflow at the top of the cone served as the discharge. The reactor had a self-contained stirring mechanism, inserted 28 cm into the reactor with a rotational velocity of 80 rpm. The paddle was 7.5 cm long and 4 cm wide. The amperage of the mixer was measured in order to estimate the power imparted to the water The meter was a "Fluke Model 70" digital multimeter with accuracy of ± 1.5% and a maximum resolution of 10mA. The power input to the water was approximately 3.5 W (See Appendix B). Volumetric flow rates through the reactor were controlled by peristaltic pumps (*Masterflex*, model number: 7553-80, Cole-Parmer Ins. Comp.). Metering of the two feed liquids was calibrated by using a stopwatch and graduated cylinder. Swine wastewater was introduced to the reactor by a peristaltic pump that drew the wastewater from a 662-L plastic tank. The Mg^{2+} source was magnesium chloride hexahydrate ($MgCl_2 \cdot 6H_2O$ in a 64% solution), which was drawn from a 250-mL beaker that was sealed with a plastic stopper to minimize evaporation. The reactor pH was controlled using an automated Walchem Corp.® pH controller, which injected NaOH (5N) into the reactor. This concentration of NaOH was selected to balance the added volume of NaOH solution without shocking the systems with large pH changes. The pH controller was set to maintain a pH of 8.5. Standard pH solutions were used to calibrate this device. When the pH dropped below 8.5 the controller began injecting NaOH. Normally the reactor pH would return to a pH of 8.5 within two minutes.

For each experiment 40 L of swine wastewater was used. The Mg^{2+} solution feed rate was adjusted to achieve a Mg^{2+}: PO_4^{3-} molar ratio of 1.6:1. These values were previously determined as optimum conditions for struvite formation (Burns et al., 2002).

Orthophosphate in the swine wastewater was 516 mg/L, thus 107 mL $MgCl_2 \cdot 6H_2O$ was added to meet the molar ratio of $1.6Mg^{2+}$: $1PO_4^{3-}$. Calculation of the flow rate for each HRT and total treatment time for 40 L of wastewater can be obtained from Appendix C. Flow rates of raw wastewater and Mg^{2+} associated with 18, 47, 94, and 141 minutes HRT's are shown in the Table 5.1.

Overflowing treated liquid flow rate equals the equation below:

Overflowing treated liquid flow rate (Q_3) = flow rate of NaOH + flow rate of swine wastewater (Q_1) + flow rate of Mg^{2+} (Q_2)

13.2. Wastewater Sample

Wastewater from a small East Tennessee swine finishing facility was used for this investigation. The facility houses on average 20 to 25 sows in their farrow to finish operation. The finish floor usually has 75 to 100 pigs. Wastewater was collected from the waste containment trench at the facility. Samples from the holding pond were transported to the laboratory using a 662 L tank.

Table 5.1. Flow rates of raw wastewater and Mg^{2+} associated with various HRT's

HRT(minutes)	18	47	94	141
Total treatment time for 40 L wastewater (hours)	2.4	6.4	12.8	19
Flow rates of raw wastewater (Q_1) (mL/min)	272	104	52	34.7
Flow rates of Mg^{2+} (Q_2) (mL/min)	0.73	0.28	0.14	0.094

13.3. Analysis

Using the methods listed in Table 5.2, raw effluent was analyzed for Mg^{2+}, PO_4^{3-}, NH_4^+, and pH. The reactor experiments were performed in triplicate at room temperature (approximately 25°C).

14. Results and Discussion

14.1. Laboratory Results of the Continuous Reactor

Table 5.2 lists the concentrations of the analyzed parameters for the untreated and treated wastewater when the HRT was 18, 47, 94, and 141 minutes. As shown in Table 5.3, increasing the reaction time did not improve OP concentration removal. OP removal ranged between 93-96%.

15. Discussion of Practicality and Feasibility

For the purpose of estimating the cost of struvite precipitation from a swine facility, the treatment of 30,400 m^3 of liquid swine manure per year was simulated. The basic assumption is that the swine facility has a 7,600 m^3 liquid manure holding basin that needs to be pumped four times per year. The farm already has a big-gun land-application system, but because of limited land area, the slurry's OP concentration needs to be reduced in order to apply the slurry on a crop nitrogen requirement basis. The sprinkler will operate at 19 L/s.

For this simulation, the following process-sequence was used. A low-pressure high-volume pump, would transfer the liquid manure supernatant into a vertical reactor.

Table 5.2. Analytical methods used to measure dissolved to quantify liquid swine manure.

Constituent	**Analytical Method**
Mg^{2+}	Atomic Absorption Spectrophotometery, Perkin Elmer Method for Analysis of Exchangeable Cations (AY-2) (Perkin Elmer, Norwalk, Connecticut).
PO_4^{3-}	Soluble phosphorus, Standard Method 4500-P E Ascorbic Acid Method (Standard Methods for the Examination of Water and Wastewater, 1998).
NH_4^+	Standard Method 4500-NH_3 B & C for Distillation and Titration (Standard Methods for the Examination of Water and Wastewater, 1998).
pH	Calibrated pH electrode (Orion Model 720A, Boston)

Table 5.3. Composition of raw and treated swine wastewater when HRT are 141, 94, 47, and 18 minutes. Number of samples (n) is 3. Standard deviation indicated in parenthesis.

		HRT			
	Untreated (raw) waste (mg/L)	141 minutes	94 minutes	47 minutes	18 minutes
Parameters		Conc (mg/L), *(% reduction)*	Conc (mg/L), *(% reduction)*	Conc (mg/L), *(% reduction)*	Conc (mg/L), *(% reduction)*
PO_4^{3-}	516.3 (±4)	19.7 (±3) (96%)	31.3 (±4) (94%)	35.4 (±2) (93%)	26 (±4) (95%)
NH_4^+	1440 (±6)	990 (±4) (31%)	1035 (±2) (28%)	990 (±4) (31%)	1010 (±7) (30%)
Mg^2	55(±8)	-	-	-	-
Total Mg^{2+}	253.9	90.7 (±7) (64%)	38.4 (±4) (85%)	70.2 (±3.5) (72%)	65.3(±5) (74%)

Within the reactor, $MgCl_2 \cdot 6H_2O$ and NaOH would be mixed with the supernatant. An overflow at the top of the reactor would then direct the wastewater to a clarifier. The clarifier discharge would supply the high pressure-high flow pump that pressurizes the traveling gun system.

A vessel is needed to allow the mixing of wastewater, magnesium and base, and provides sufficient HRT for the precipitation reaction to occur. Previous research has shown 10 min to be an appropriate HRT. At 19 L/s, the volume required to produce a 10 min HRT would be 11,400 L. Commercial tanks with this volume can be purchased with 45° conical bottoms and cylindrical sides. Using the tank diagrammed in Figure 5.2, the upflow liquid velocity will be 0.0046 m/s.

A literature review found that a typical struvite particle has a 0.004 cm radius (Buchanan, 1993) and a 1.7 g/cm^3 density (Sharp, 2002). Using Stokes law for particle settling, it was determined that the average settling velocity will be 0.0027 m/s, which is less than the liquid velocity in the tank. Thus a clarifier will be needed to provide liquid-solid separation. The length of the clarifier is based on the particle-settling velocity. The resulting velocity yielded a Reynolds number less than one, and thus it was assumed that the use of Stokes law was a valid procedure (Appendix D).

For the purpose of estimating energy costs, it was assumed the pressurized effluent is being conveyed in 20 cm diameter coupled-aluminum pipe for 305 m to the land application area. The hard hose system has 300 m of polyethylene, 10 mm diameter pipe.

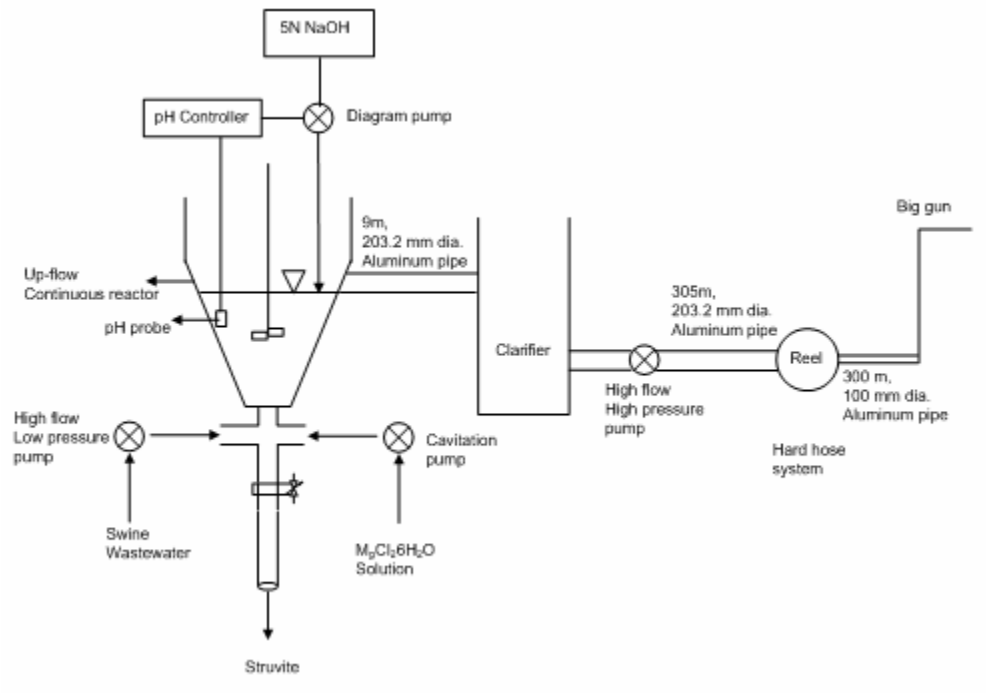

Figure 5.2. Land Application of Lagoon Effluent (Drawn by Mr. Renbin Zhou).

Pressure at the sprinkler is 552 kPa. The illustration is shown in Figure 5.2. Design parameters for conical reactor and clarifier are shown in Table 5.5.

Headloss

For this system headloss is calculated (Appendix D) by Hazen-Williams Headloss Equation (Finnemore and Franzini, 2003) and total head is determined as 704 kPa for the system (Table 5.4).

For this simulation, $MgCl_2 \cdot 6H_2O$ and NaOH are added to the reactor. Tankage will be required to store the $MgCl_2 \cdot 6H_2O$ and NaOH solutions. Thus, estimates of the flow rate and the size of the tanks are given in Appendix D. Table 5.6 provides the flow rate and the tanks sizes for both chemicals.

Table 5.4. Headloss (h_f) Result.

Location	***L (m), D (mm), pipe type, and C***	***h_f (kPa)***
between the reactor and the chamber(ft)	9, 203.2, aluminum pipe, and 137	0.16
in high flow high-pressure pipe	305, 203.2, aluminum pipe, and 137	5.3
in hard hose system	300, 100, PV-pipe, and 150	146
Big gun	-	552.3
Total Head	-	**704**

Table 5.5. Design parameters for conical reactor and clarifier.

Parameters	**Conical reactor**	**Clarifier**
Flow rate (L/sec)	19	19
HRT (min)	10	
Volume (m^3)	11.4	14
Diameter (cm)	126 (top), 10.16 (bottom)	-
Height (m)	8.1	-
Settling velocity (m/s)	-	0.0027

Table 5.6. Parameter values of chemicals

Parameters	**$MgCl_2.6H_2O$**	**NaOH**
Flow rate (L/sec)	0.04	0.095
Amount	15.6 m^3	7,600 kg
Tank Size (m^3)	22	53

Flow Rate and Tank Size of $MgCl_2 \cdot 6H_2O$

In this simulation, the liquid swine manure has 516.3 mg/L (0.00537 M) of PO_4^{3-}. Because the molar ratio of 1.6 Mg^{2+}:1.0 PO_4^{3-} has been selected, the total Mg^{2+} concentration in the reactor needs to be 0.0086M. In volumetric terms, 15.6 m^3 $MgCl_2 \cdot 6H_2O$ is needed to treat 7,600 m^3 wastewater. At 19 L/s, the application time will be 111 hours. Therefore, flow rate of $MgCl_2 \cdot 6H_2O$ becomes 0.04 L/sec. The calculation is shown in Appendix D.

It was decided to hold the entire volume of $MgCl_2 \cdot 6H_2O$ rather than refill the supply tank during wastewater treatment. Therefore a 22 m^3 tank will be needed. The brine solution will contain 12,476 kg of $MgCl_2$ crystals and 7.0 m^3 of water.

Flow Rate and Tank Size of NaOH

The simulated wastewater will require roughly 38 m^3 NaOH (5N) to treat 7,600 m^3. Using 111-hr of processing time, the average NaOH-solution flow rate will be 0.095 L/s. If NaOH is purchased as a 5N pre-mix, then the ability to hold roughly 53 m^3 is required.

Mixer

The mixer design parameters were scaled based on the stirring energy provided to the laboratory-scale reactor. In our system, swine wastewater and $MgCl_2$ are pumped from the bottom of the reactor. Thus, there is vertical flow through the conical reactor. Therefore, a radial-flow impeller mixer model was used to scale up the mixer (Metcalf and Eddy, 2003). Power and paddle area were calculated as 7.83 kW (~10 hp) and 95.8 m^2, respectively. Therefore, a 10 hp, 1740 rpm electric motor (http://www.northerntool.com) has been selected for this simulation. The energy

consumption should be approximately 7.5/0.8 = 10 Kw, assuming an 80% efficient motor and line loss.

16. Economic Evaluation

As previously mentioned, it is assumed that contents of this liquid manure storage facility have traditionally been land applied using an irrigation system. Removing the OP by chemical precipitation is an additional cost. Basic economic feasibility was performed considering the cost of the additional pumps, pH controller, electrode, mixer, chemicals, reactor, chemical storage tank, and potential income from fertilizer value of struvite. It is assumed that the irrigation system is going to be used whether chemicals are added or not. Thus, the cost of land application will be evaluated both with and without chemical precipitation.

16.1. Land Application without Chemical Precipitation

The cost of this land application without chemical precipitation will include only the operational cost and capital costs of the irrigation system. It is assumed that operational life of the system is 10 years. As shown in Table 5.7 the estimated cost of the irrigation system is $3,671/year.

Both the pump and hard-hose reel system will be powered by gasoline. The volume of gasoline consumption is presented in Table 5.8 (See Appendix D for the calculations). Since each pump out will take 111 hours, the total dollars of energy consumption for is $1,022. Thus, with four pump-outs per year, the overall energy cost is approximated to be $4,088/year. Therefore, the total cost of land application without chemical precipitation is estimated to be $7,759/year.

Table 5.7. Capital cost of irrigation equipment

Pump Type	**Price ($)**	**Model number and reference**
High flow, high pressure pump	3,175	K25B2$^{1}/_{2}$ZRL, ("Rain–Flo Irrigation" catalog)
Hard Hose system (Big Gun and Reel)	26,000	120-300 E21, ("Rain–Flo Irrigation" catalog)
Aluminum Irrigation Pipe	7,542	8"x30' Ring-Lock ("Rain–Flo Irrigation" catalog)
Total	36,717	

Table 5.8. Power of the pumps and energy consumptions

Parameters / Pump	**Hard-Hose Reel**	**High Pressure Pump**
Power	5 (Bhp)	27.45 (Bhp)
Energy consumption	1.96 L gasoline/hr	10.66 L gasoline/hr
Price ($)/hr	1.43*	7.78*

*The gasoline price is $0.73/L (September, 2005)

16.2. Land Application with Chemical Precipitation

The cost of OP precipitation will include a low-pressure transfer pump, diaphragm and injector pumps, chemicals, pH controller, electrode, and mixer equipment. It is assumed that life of the pumps is 10 years (Table 5.9A). Therefore the estimated cost of the chemical equipment is $370.5/year.

Magnesium chloride and sodium hydroxide prices are presented in Table 5.9B. Four pump-outs per year will require $53,120/year worth of chemicals.

It was assumed that the operational life of the pH controller and electrode was two years. For the tanks, reactor, and mixer, a ten-year operational life were assumed (Table 5.9C). The estimated cost for pH controller and electrode becomes $117/year and for the tanks, reactor, and mixer it becomes $2,010/year. Therefore the estimated total cost is $2,127/year.

The low-pressure pump is powered by gasoline. However, both diaphragm type and impeller pumps will be powered by electricity. The amounts of gasoline and electricity consumption are presented in Table 5.10. See Appendix D for the calculations. Since the process will take 111 hours. The total energy consumption for the pumps and mixer is $982. Further, for annualized cost, it has been assumed that four pump-outs per year are required. Therefore, overall cost will be $3928/year.

Table 5.9. The process with reactor (A) Chemical equipment prices (B) The chemical prices used in the process for each pump-out (C) The price of pH controller, electrode, and mixer

Pump Type	**Price ($)**	**Model number and reference**
High flow, low pressure pump	2,975	K25B2ZL, ("Rain–Flo Irrigation" catalog)
Moyno® progressing cavity pump (injecting $MgCl_2 \cdot 6H_2O$)	550	Cat. No. HW-75400-07 (Cole-Parmer)
Plastic double diaphragm pump (injecting NaOH)	180	Cat. No. HW-75000-10 (Cole-Parmer)
	3,705	

(A)

Chemical	The amount	Price ($)	Reference
NaOH (5N)	38 (m^3)	2,280	http://www.chemicalmarketreporter.com ($60/$m^3$)
$MgCl_2 \cdot 6H_2O$ crytals	12,476 (kg)	15,095	Kemiron Company ($1.21/kg) (Vic Johnson, Technical Sales)
		17,375	

(B)

Table 5.9. continued

Other Equipments	Price($)	Reference
pH controller	239	(http://www.omega.com/pptst/PHCN70.html)
Electrode	115	(http://www.omega.com/pptst/PHCN70.html)
Total	**354**	

Other Equipments	Price($)	Reference
Mixer	695	(http://www.northerntool.com)
Reactor (15.5 m^3)	5,100 (with metal stand)	Kefco, Inc
Tank (2*26.5 m^3)	9,540	Diverse Plastic Group Inc
Tank (22 m^3)	4,770	Diverse Plastic Group Inc
Total	**20,105**	

(C)

Table 5.10. Power of the pumps, mixer and energy consumptions

Parameters / Pump	**Low pressure**	**Diaphragm**	**Impeller**	**Mixer**
Power	29.74 (Bhp)	0.373 kW	0.373 kW	7.5 kW
Energy consumption	11.65 L gasoline/hr	0.466 kW/hr	0.466 kW/hr	6kW/hr
Price ($)/hr	8.5*	0.0233**	0.0233**	0.3**

*The gasoline price is $0.73/L, **1 kW/hr is $0.05

Struvite has value as a fertilizer replacement. Knowing the potential recovery of struvite (based on OP reduction), it was estimated that 7.6 tonnes of struvite could be produced. This value assumes 80% recovery efficiency. This calculation is in Appendix E. The price of the struvite fertilizer was reported by several researchers but in this work, the price which is 276 US$/tonnes used in this analysis is based on Munch and Barr, 2001. The recovered struvite will provide $2,097.6 as income per pump out (Table 5.11). On an annual basis, this will provide $8,392 per year of income.

Therefore, the total cost of land application with chemical precipitation is estimated to be $68,000/year. This includes the equipment, chemical, energy consumption and income from stuvite sales. Chemical cost, which is estimated to be $69,500/year, is the biggest portion of this amount.

17. Conclusions

The laboratory scale continuous reactor reduced the OP concentration between 93-96% with different HRT's. It was shown that HRT beyond 10 minutes does not have much impact of reducing the soluble-P concentration. For the scaled-up process the minimum HRT was selected as 10 minutes. In this design, the equipment required for the treatment plant was determined by engineering methods. It was assumed that the irrigation system is going to be used whether chemical precipitation is used or not. Therefore economic analyses were performed for the land application without chemical precipitation and land application with chemical precipitation. The land application without chemical precipitation costs $7,759/year. This includes the irrigation equipment

Table 5.11. Estimated market value of struvite

Product	**Estimated Market value (US$/tonnes)**	**Reference**
Struvite (7.6 tonnes)	276	Munch and Barr (2001)
	(+)2,098 (income from swine wastewater treatment)	

and the energy consumption. The land application with chemical precipitation cost was estimated to $68,000/year. This price includes equipment, chemicals, and income from sale of struvite. The cost of the chemicals is the most significant component of the evaluation. There is a 770% difference between these two cost values. Although the difference is very high, this method is technically feasible method for P reduction. It is recommended that a livestock producer should consider this method if land application of manure is P-based.

18. Discussion

Overall, P removal by the forced precipitation of struvite is a technically feasible method. A laboratory-scale continuous reactor was developed to test the effects of HRT. This reactor was investigated with HRT as low as 18 minutes. Based on the result of this experiment and based on the results from the 10-minute beaker study, it is inferred that 10 minutes is an adequate HRT for the struvite formation reaction to occur. Having a shorter HRT allows for a smaller reactor volume.

A simulation was conducted to estimate the materials needed to remove P from a 7,600 m^3 of liquid swine manure. The selection of components focused on finding "off-

the-shelve" products. For example, a conical-bottom tank with straight walls was selected rather than attempting to cost out a custom built, 15.5 m^3 conical reactor. The selected tank has a conical bottom that will still allow the rapid mixing of the liquid swine manure and $MgCl_2$ brine solution. Again, because of the beaker study (beakers with straight walls), and the conical reactor study, it is inferred that the combination of shapes (the commercial conical reactor) will be adequate to provide energy to the reaction.

This simulation demonstrated the potential cost of struvite production. While there is a significant recovery of struvite, which can be sold as fertilizer, this recovery does not cover the cost of the required $MgCl_2$ and NaOH. The most significant cost is the $MgCl_2$. This simulation was based on a $MgCl_2$ unit cost of $1.21/kg. If a less expensive source of this material can be located, then the economics will become more favorable.

In this research, it was found that the land application with chemical precipitation is expensive. However, comparisons of nitrogen and phosphorus-based nutrient management plans indicate that some poultry-broiler producers, swine producers, and diary producers may require as much as ten, eight, and four times more land, respectively, if required to shift to a phosphorus-based plan (Burns, et. al., 1998). Producers who do not have an adequate land base will be faced with transporting manure nutrients off-site. Recovery of phosphorus as precipitated struvite has the potential to substantially reduce phosphorus transportation costs. By isolating the excess phosphorus and converting it into a crystal, this nutrient can be economically moved to phosphorus-depleted cropland. There are other alternatives for the chemical binding of P. Products, such as lime (CaO), aluminum sulfate ($Al_2(SO_4)_3$), ferric chloride ($FeCl_3$), ferrous

(bivalent), and ferric sulfates ($Fe_2(SO_4)_3$), are used to precipitate P (Stumm and Morgan, 1996). However, the addition of soluble iron or calcium leads to precipitation of the P in the form of iron phosphate or calcium phosphate salts, respectively. Only the Ca^{2+} is significant plant nutrient. The iron will accumulate in the soil and can be toxic to plants and livestock. Sulfates based compounds will depress the effluent pH and therefore, reduce soil solution pH. Precipitation of P by struvite has the advantage of providing P and N as major nutrients, and Mg^{2+} as a minor nutrient.

References

Bowers, K. E. and P.W. Westerman. 2003. Phosphorus removal in a novel fluidized bed crystallizer. #034123, ASAE Annual International Meeting, Las Vegas, Nevada, USA.

Sharp, E. 2002. Phosphorus recovery from centrifuge liquors using magnesium hydroxide for controlled struvite precipitation. MSc Thesis, Cranfield University, England.

Buchanan, J.R. 1993. Struvite Control in Flush Water Recycle Components of Livestock Waste. MSc Thesis, University of Tennessee, USA.

Burns, R.T., T.L. Cross, K.J. Stalder, and R.F. Theurer.1998. Cooperative Approach to Land of Animal Waste in Tennessee. Presented at Animal Production Systems and the Environment : An International Conference on Odor, Water Quality, Nutrient Management and Socioeconomic Issues. Published in proceedings: Volume 1: pages 151-156 Des Moines, Iowa.

Burns, R.T., L.B Moody, F.R. Walker, and D.R. Raman. 2001. Laboratory and in-situ reductions of Soluble Phosphorous in Liquid Swine Waste Slurries. *Environ. Technol.,* 22(11): 1273-1278.

Burns R.T., L.B. Moody, I. Celen and J. R. Buchanan. 2002. Optimization of Phosphorus Precipitation from Swine Manure Slurries to Enhance Recovery. Water Sci. Technol. 1(48), 139-146.

Chemical market reporter (CMR). NaOH price 2005. available at: http://www.chemicalmarketreporter.com.

Cole Parmer. 2005. Fluid handling system source book. Pumps. 82-83.

Çelen, I. and M. Türker 2001. Recovery of ammonia from anaerobic digester effluents. *Environ. Technol.,* 22(11), 1263-1272.

Doyle, J.D., and S.A. Parsons. 2002. Struvite formation, control and recovery. Wat. Res., 36, 3925-3940.

Jaffer, Y., T.A. Clark, P. Pearce, and S.A. Parsons. 2002. Potential phosphous recovery by struvite formation. *Wat. Res.* **36**, 1834-1842.

Laridi, R., J.C. Auclair, and H. Benmoussa. 2004. Laboratory and pilot-scale phosphate and ammonium removal by controlled struvite precipitation following coagulation and flocculation of swine wastewater. Cranfield University, England:

International Conference on Struvite: Its Role in Phosphorous Recovery and Reuse.

Longenbaugh, R.A. and H.R. Duke. 1981. “Farm pumps”. In design and operation of farm irrigation systems, M.E. Jenson, Editor. ASAE, St. Joseph, MI.

Metcalf, and Eddy. 2003. Wastewater Engineering Treatment and Reuse. McGraw-Hill Companies, Inc. New York.

Mineral Research and Development. The price of $MgCl_2.6H_2O$ (liquid). Personal contact.

Munch, E.V. and K. Barr. 2001. Controlled struvite crystallisation for removing phosphorus from anaerobic digester sidestreams. *Wat. Res.* **35**, 151-159.

Northern tool and equipment. 2005. Electric motor, mixer. Available at: http://www.northerntool.com.

Omega engineering. 2005. pH controller and electrode. Available at: http://www.omega.com/pptst/PHCN70.html.

Rain-Flo Irrigation annual Catalog. 2002. Water pump units and Bauer Rainstar Traveling Machines. pages 54 and 64.

Sharp, E. 2002. Phosphorus recovery from centrifuge liquors using magnesium hydroxide for controlled struvite precipitation. MSc Thesis, Cranfield University, England.

Schuiling, R.D. and A. Andrade. 1999. Recovery of struvite from calf manure. J. Environ. Technol., 20, 765-768.

Schipper, W. and A. Verhoek. 2004. Struvite as an alternative feedstock for elemental phosphorus production. Cranfield University, England: International Conference on Struvite: Its Role in Phosphorous Recovery and Reuse

Suzuki, K., Y. Tanaka, T. Osado, and M. Waki. 2002. Removal of phosphate, magnesium, and calcium from swine wastewater through crystallization enhanced by aeration. Wat. Res., 36, 2991-2998.

Ueno, Y. and M. Fujii. 2001. Three years operating experience selling recovered struvite from full- scale plant. Environmental Technology, 22(11), 1373-1381.

Part VI

Summary and Recommendations for Future Work

Summary

This project was conducted in three phases. The first phase studied the effect of reaction time, pH, Mg:NH_4:PO_4 ratios, and seeding were studied. Supernatant was collected from a pull-plug pit under a swine farrowing unit and from a holding pond at a feeder pig unit operating as a recycle flush system. The resulting PO_4^{3-} concentrations were only 1.3 and 3.4% higher after 10 min into the reaction than after 40 min into the reaction. Therefore, it was concluded that changing the reaction time from 10 to 40 min did not increase the OP removal. The effect of pH was significant. Adjusting the pH in the high and low concentration wastes from 7.4 and 7.5 to 8.5 resulted in an additional 7 and 18% of PO_4^{3-} removal. Therefore, the optimum pH was 8.5. The optimum molar ratios of Mg^{2+}:PO_4^{3-} was 1.6:1 Magnesium addition greater than 1.6:1 did not effectively increase PO_4^{3-} removal because PO_4^{3-} removal at 1.6:1 was already high. The seeding studies did not provide the results expected. The precipitate was not large enough to warrant enhanced recovery.

In second phase, the chemical equilibrium model, Visual Minteq, was investigated to determine its usefulness for prescribing the amendments needed to maximize struvite precipitation from liquid swine manure and thus reduce the OP concentration. Using a liquid swine manure from a small East Tennessee swine finishing facility as a test case, the actual concentrations of Mg^{2+}, Ca^{2+}, K^{+}, PO_4^{3-}, NH_4^{+}, and alkalinity of a liquid swine manure sample were used as inputs to the model. Four approaches were taken to determine the optimum means of saturating the solution with respect to struvite. The first approach was to simply increase the wastewater pH to 8.5 by adding NaOH. Approaches

2-4 progressively increased the magnesium concentration, and then increased the solution pH to 8.5 with NaOH, until the maximum amount of OP was removed as struvite. By increasing the pH to 8.5, the model estimated a 62% reduction in soluble phosphorus. By increasing the magnesium concentration and raising the pH, Visual Minteq estimated that greater than 93% of the soluble phosphorus could be removed. Bench-scale verification of these results was conducted. The liquid swine manure was amended as suggested by the Visual Minteq results. By bringing the solution pH to 8.5 with NaOH, the bench-scale reaction reduced the OP concentration by only 55%. By increasing the Mg^{2+} concentration such that the molar ratio of Mg^{2+}:PO_4^{3-} is 1.0:1.0 or greater, reductions in soluble phosphorus were found to be 97% and greater. Verification demonstrated good agreement between the equilibrium model and laboratory analyses.

Finally, phase three was the evaluation of a laboratory scale continuous reactor for OP removal from swine wastewater. The effect of HRT was studied. The laboratory scale reactor exhibited very high OP removal when the wastewater was enriched with magnesium and the solution pH was increased to 8.5 with NaOH. Three different hydraulic retention times (HRT) (141, 94, 47, and 18 minutes) were tested in the laboratory, and OP removals were 96, 94, 93, and 95%, respectively. Also, in this research, economic evaluation based on the chemical cost, several devices, pumps, and processing of product (minus income) is reported for an up-scale process. A conceptual, continuous flow device was simulated in order to estimate the cost of struvite recovery as a means of reducing SP. The whole process costs $67,533/year. However the process without reactor costs $7,759/year.

Recommendations for Future Work

The primary issue with P removal via struvite formation is the chemical cost. Magnesium is required to match the molar ratio of P and the pH (for most liquid manure systems) needs to be increased in order to minimize struvite solubility. Seawater could serve as a Mg^{2+} source but has not been economically evaluated.

More information needed about the nucleation process. Can seeding enhance precipitation without having to add as much $MgCl_2$ and/or base?

For full-scale operation, new efforts need to focus on the actual reactor design and liquid-solid separation. It was assumed that gravity-based separation would yield 80% recovery of the precipitant. Hydro-cyclones may provide additional struvite recovery, and therefore more struvite available for income.

Finally, for this P-recovery technology to be used, the system needs to be convenient to use. It is recommended that this system be designed to be mobile. Research needs to conducted to determine if such a system could fit on the bed of an large truck, and be utilized as part of a cooperative liquid-manure pumping arrangement among neighbors.

Appendix

APPENDIX A: Calculation of Total H^+ and CO_3^{-2}

The species concentration from the output is given in Table A.1

Table A.1. Species concentration obtained from Model

Species	Concentration (mol/L)
CO_3^{-2}	$1.39*10^{-5}$
H^{+1}	$1.61*10^{-7}$
$H_2CO_3^*$ (aq)	0.008619
HCO_3^-	0.029946
OH^-	$7.9*10^{-8}$

From Table A.1, total CO_3^{2-} and H^+ can be calculated:

Total $CO_3^{2-} = H_2CO_3 + HCO_3^- + CO_3^{-2}$

Total CO_3^{2-} = 2312.8 mg/L

Total $H^+ = H^+ + 2x\ H^+$ (from H_2CO_3) + H^+ (from HCO_3^-)

Total H^+ = 47.5 mg/L.

APPENDIX B: Power input of stirring mechanism

I = current or amperage

$V_{\text{stirring mechanism}}$ = 115 voltage

P = power

$I_{\text{with water}}$ = 2.84 A

$I_{\text{with no water}}$ = 2.81 A

$I_{\text{with water}} - I_{\text{with no water}}$ = 0.03A

P = VxA = 115Vx0.03A = 3.45W

APPENDIX C: Calculation of the flow rate of the wastewater and $MgCl_2.6H_2O$ for each HRT (laboratory –scale continuous reactor)

Flow rate of swine wastewater (Q_1) = Reactor volume / HRT(min)

Total treatment time = Total swine wastewater (mL) / Q_2

Flow rate of $MgCl_2.6H_2O$ (Q_2) = Added $MgCl_2.6H_2O$ (mL) / Total treatment time (min)

Example Calculation;

When HRT = 18 minutes;

Q_1*18 min = 4900mL

Q_1= 272 mL/min (Flow rate of swine wastewater)

Total treatment time = 40,000 mL / 272 mL/ min

Total treatment time = 147 min = 2.45 hours.

PO_4^{3-} = 516 mg/L (0.0052 M), Mg^{2+} = 0.0084 M ($1.6Mg^{2+}$: $1PO_4^{3-}$), 107 mL

$MgCl_2.6H_2O$ (64% solution)

Flow rate of Mg^{2+} (Q_2) = 107 mL / 147 min = 0.7 mL / min

APPENDIX D:

Headloss

$h_f = k\ L\ (Q/C)^{1.852} / D^{4.87}$

k = convertion constant

L = length of pipe

Q = volumetric flow rate

C = Hazen-Williams coefficient

D = pipe diameter

Example Calculation;

Headloss between the reactor and the chamber;

Assume L = 9 ft, D = 0.203m. and steel; aluminum pipe (C = 137; source: Pipeline design for water engineers, D. Stephenson, 1981).

$Q = 0.019\ m^3/s$

$h_f = 10.46*9*(0.019/137)^{1.852}/(0.203)^{4.87}$

$h_f = 0.0163\ m$

$h_f = P/\gamma$

$P = 0.0163\ m*9.81\ kN/m^3 = 0.16\ kPa$

Volume of reactor calculation

A big-gun sprinkler, operating at Q = 19 L/sec

Detention time (t) = 10 min (10*60 = 600 sec)

V_1 = volume of the laboratory-scale reactor = 4.9 L

V_2 = product collector volume of the laboratory-scale reactor (at the bottom of the reactor) = 0.18 L

V_3 = volume of the scaled-up reactor (including product collector) and clarifier V_3

$V_3 = Q*t$

V_3 = 19 L / sec*600 sec =11,400 L = 11.4 m^3

Calculation of height of the full scale reactor:

$V_5 = 1/3\ \Pi\ h\ (r_1^2 + r_2^2 + r_1\ r_2)$

Full scale reactor is assumed to have the same conical angle as the pilot reactor (8.14° from vertical), and assumed to have a bottom diameter that will allow the placement of an eight-inch nominal diameter pipe connection. Thus, r_2 is assumed as 10.16 cm. The reactor height (h) and r_1 are related by the rule of similar triangles:

$r_1 = h*(\tan 8.14) + r_2$

Using a reactor volume of 11.4 m^3, h is determined to be 810 cm and r_1 is 126 cm.

Calculation of particle Reynolds number:

$Re_p = d_pU/\nu$

Re_p = particle Reynolds number

d_p = diameter of particle (m) = $8*10^{-5}$

U = velocity of the particle (m/s) = 0.00475

ν (m^2/s) = $0.893*10^{-6}$

$Re_p = (8*10^{-5})(0.00475\ m/s) / 0.893*10^{-6}\ m^2/s = 0.43$ (Since it is less than 1 stokes law is valid)

Stokes Law

In order to find the clarifier size, settling velocity was calculated by using Stokes law and equation is given below:

$V_{(Settling\ velocity)} = (2\ g\ r^2)(d_1-d_2)/9\mu$

V = velocity of fall (cm sec^{-1}),

g = acceleration of gravity (cm sec^{-2}) = 981

r = "equivalent" radius of particle (cm) = assumed as 0.004 cm (Buchanan, 1994)

d_1 = density of particle (g cm^{-3}) = 1.7 g/cm^3 (Sharp, 2002).

d_2 = density of medium (g cm^{-3}) = 1

μ = viscosity of medium (dyne sec cm^{-2}) = assumed as water medium at 25^0C (0.00089 N.s/m^2 = 0.0089 dyne sec cm^{-2})

Settling velocity (V) = 0.0027m/s

Clarifier size calculation

Assume clarifier has 2 m height and width; Area = 4 m^2

Q = 0.019 L / s

Velocity of the particle in the clarifier = 0.019 L / s/4 = 0.00475 m/s

2 m/0.0027 m/s = 740 sec = 12.3 minutes

Length = 740 s*0.00475 m/s = 3.5 m

Volume = 2*2*3.5 = 14 m^3

Calculation of Flow rate and tank size of $MgCl_2.6H_2O$

$V_{MgCl2.6H2O}$ = 15.6 m^3

$V_{wastewater}$ = 7,600 m^3

Q = 19 L/s = 0.019 m^3/s

Reaction time(t) = $V_{wastewater}$/Q = 7,600/0.019 = 400,000 sec. =111 hrs

$Q_{MgCl2.6H2O} = V_{MgCl2.6H2O}$ / t = 15.6 m^3 /400,000 sec = $4*10^{-5}$ m^3/sec = 0.04 L/sec

The $MgCl_2.6H_2O$ tank will be 22 m^3 (15.6 m^3*7days/5days).

Calculation of Flow rate and tank size Flow rate of NaOH

$V_{NaOH\ (5N)}$ = 38 m^3

$Q_{NaOH} = V_{NaOH}$ / t = 38 m^3/ 400,000 sec = $9.5*10^{-5}m^3$/s = 0.095 L/sec

The NaOH tank will be 53 m^3. (or a tank for storing 7,600 kg NaOH).

Energy requirements

Brake horse power (Bhp) =Total dynamic head (ft)*flow rate (gpm) / (3960*efficiency at the pump)

Bhp for high flow, low pressure = 235.6 ft *300gpm/(3960*0.6) = 29.74

9.74 Bhp is for 1 gallon (Longenbaugh and Duke, 1981). Therefore, this pump consumes 11.65 L gasoline/hour

Bhp for high flow, high pressure = 235.6 ft *300gpm/(3960*0.69) = 27.45

Therefore this pump consumes 10.66 L gasoline/hour

Bhp for irrigation system = 235.6 ft *300gpm/(3960*0.69) = 27.45

Therefore this pump consumes 10.66 L gasoline/hour

Diaphragm Type and impeller pump are ½ hp (0.373 kW). Efficiency of the motor is 80 % (Longenbaugh and Duke, 1981). Therefore Energy consumption for each pump is 0.373 kW/0.8 = 0.466 kW/hr.

APPENDIX E. Amount of Struvite produced from the precipitation reaction held in the full scale reactor.

Limiting factor is OP because it is reduced mostly in the precipitation reaction as presented before.

OP concentration = 516.3 mg/L

OP removal = 95%

Efficiency for removing the struvite from the treated wastewater = 80%

$V_{wastewater}$ = 7,600,000 L

0.516 g/L OP *0.95 =0.49 g/L OP

0.49 g/L OP * 0.8(efficiency) = 0.392 g/L

7,570,800 L*0.392 g/L = 2, 967,753.6 g OP

2, 967,753.6 g OP*(1 mol OP/96 g OP)*(246.3 g struvite/1 mol struvite)

= $7.6*10^6$ g = 7.6 tonnes.

Vita

Ipek Celen was born on May 11, 1974 in Istanbul, Turkey. She received her B. S. Degree in Chemistry Marmara University, Turkey in June 1997. In January 1998, she entered Environmental Engineering Department at Gebze Institute of Technology, Turkey and was employed as a graduate assistant and earned a Masters degree in August 2001. She started her Doctorate program in Biosystems Engineering and Soil Science Department at The University of Tennessee in January 2002 supported by a Graduate Research Assistantship from the Department of Biosystems Engineering and Soil Science. Her primary research work was in the phosphorous removal from swine wastewater by chemical precipitation.