To the Graduate Council:

I am submitting herewith a thesis written by Paul R. Schwer entitled “Remote Monitoring of Barowell Pumps Using a Radio Link.” I have examined the final electronic copy of this thesis for form and content and recommend that it be accepted in partial fulfillment of the requirements for the degree of Master of Science, with a major in Electrical Engineering.

Bruce W. Bomar, Major Professor

We have read this thesis
and recommend its acceptance:

L. Montgomery Smith

Bruce A. Whitehead

Acceptance for the Council:

Carolyn R. Hodges, Vice Provost
and Dean of the Graduate School

(Original signatures are on file with official student records.)

Remote Monitoring of Barowell Pumps

Using a Radio Link

A Thesis

Presented for the

Masters of Science

Degree

The University of Tennessee, Knoxville

Paul R. Schwer

May 2008

Acknowledgements

The author wishes to thank his major professor Dr. Bruce W. Bomar for his advice and support through out his work on this thesis. He would also like to extend his gratitude to the other members of his committee, Dr. L. Montgomery Smith and Dr. Bruce A. Whitehead. Appreciation is also expressed to Donavon Hervig for his advice and contributions to this thesis and to Aerospace Testing Alliance for the opportunity to pursue this graduate degree and the resources to complete this master's thesis.

Abstract

Barowell pumps are notorious for having problems and failures, which sometimes occur at the most inopportune times during aeropropulson testing. These failures could be better predicted with proper health monitoring. Continuous monitoring of changes in the health of the pump would allow timely preventive and corrective maintenance to be performed as necessary to reduce failures and reduce plant downtime.

This thesis addresses a wireless method to monitor these pumps remotely by a user located in the control room. The operator can note the ultrasonic amplitude of the bearings on the pumps and make a decision to schedule preventive maintenance.

An UE Ultra-Trak 750 ultrasonic microphone was used to produce the analog data. Its output was put through an anti-alias filter and then digitized. An Analog Devices ADuC 7024 microcontroller was used to sample and digitize the data. Digital data was then sent out over the UART to a MaxStream 9XTend RF Module. This module sent the data over a radio link where it was received and processed using the Computer Assisted Dynamic Data Monitoring and Analysis System (CADDMAS) at AEDC. The design and development of this system is described in detail herein.

The system was designed with a two-channel capacity. The system used a 4 kHz multiplexed A/D to obtain a 2 kHz sample rate per channel and the data was sent out at baud rate of 115200 via a 900 MHz serial RF modem. After development, the system performed the desired function of transmitting the

ultrasonic vibration data to the user for evaluation. Data was reliably transmitted at 10mW over the air to a host computer located approximately 120 ft where it was successfully processed.

Table of Contents

1. Introduction 1

2. Approach 6

3. Design 10

3.1 Analog circuit design 10

3.2 Transmitting Software design 12

3.3 Receiver Software Design 13

3.4 Layout Considerations 14

5. Findings and Results 18

5.1 Filter Verification 18

5.2 End-to-End Verification 18

7. Summary 22

References 24

Appendices 27

Vita 44

List of Figures

Figure 1: Receiving RF Modem 28

Figure 2: Hardware Block Diagram 28

Figure 3: Ultrasonic Transducer 29

Figure 4: Loop Power Connection Diagram 29

Figure 5: Filter Response Curve 30

Figure 6: Signal Processing for Demodulated Output 31

Figure 7: Signal Processing for Heterodyned Output 31

Figure 8: Transmission PC board 31

Figure 9: Data Packet Format 32

Figure 10: Transmitting Software Flow Diagram 33

Figure 11: Receiving Software Flow Diagram 35

Figure 12: Transmitting Enclosure 35

Figure 13: Filter Verification Plot 35

Figure 14: Response test for channel 1 37

Figure 15: Twenty Samples of a 200Hz Sine wave 38

Figure 16: CADDMAS Screenshot of Barowell Output 39

Figure 17: Speaker Test Rig 40

Figure 18: UE microphone bonded to failing cooling fan 40

Figure 19: Baseline data from cooling fan 41

Figure 20: Data from failing cooling fan 41

1. Introduction

Arnold Engineering Development Center (AEDC) is the most advanced and largest flight simulation complex in the world. It currently operates 58 test facilities, 14 of which are unique to this complex. AEDC is operated under the Air Force Materiel Command. The facility has contributed to the majority of the nation's top priority aerospace programs. [1]

One chief program at AEDC is aeropropulson testing. This involves operation of turbine engines at flight conditions. In order to meet the conditions that these engines experience during flight, it is necessary to simulate their operation in an environment below atmospheric pressure.

During testing, large quantities of water are sprayed into the exhaust ducting for cooling purposes. In order to maintain the conditions of the test cell, this water must be removed through drains. However, this water cannot be removed with a traditional gravity drain. It is necessary to drain the ducting by using a barometric well. This purpose of this well is to provide a point low enough so that the drain lines can remain below atmospheric pressure. The barowell pumps then remove the excess water from the well.

Barowell pumps are notorious for having problems and failures, which sometimes occur at the most inopportune times during aeropropulson testing. The failure of these pumps can be linked to the difficult environment in which they operate. However, these failures could be better predicted with proper health monitoring.

Currently, the barowell pumps are only monitored periodically with a technician physically going out to the pump and making measurements of the power in the 40 kHz range, via a hand held measurement device. This is costly and does not allow for continuous monitoring.

According to NASA Research, when a bearing enters the beginning stages of failure, there is an increase in the ultrasonic vibration from 12 to 50 times over a set baseline. These changes in the acoustic amplitude of these vibrations were found in the frequency band of 24 to 50 kHz and were noticeable before other indications such as heat and low frequency vibrations changes. Not only can the early stage of bearing failure be monitored and detected; other warning signs can also be noted such as: pump cavitation, lack of lubrication, advanced failure and other catastrophic failure. [2 - 3]

Early detection of mechanical failure is made possible through monitoring the ultrasonic vibrations emitted from the pump. These vibrations are produced by friction, ionization, and turbulence, which, if monitored, renders this an effective method for testing mechanical systems. Another advantage to the use of the acoustic emissions in the ultrasonic region is they are easily isolated from ambient plant noise which is found below approximately 20 kHz. [3 - 4]

Other research suggests that the band that the acoustic emissions are transmitted in is rather broad and may be found from approximately 20 kHz to a few megahertz. The increase in the amplitude is due to component degradation and is relatively uniform across the ultrasonic spectrum; i.e. the noise generated by the phenomenon is approximately white in nature. Mechanical degradation in

the device causes this effect. An increase in the amplitude of these vibrations occurs at the start of degradation. These effects can be used to detect the onset of many failure modes of pumps and rotating machinery including improper lubrication, pump cavitation, and bearing failure. [5 - 9]

Sources of bearing failure modes are known to produce acoustic emissions in the ultrasonic region. These emissions are caused by imperfections in the balls such as warping or cracking due to stress and released as the ball makes contact with the races. Traditional methods of monitoring for these defects include vibration analysis; however, these low frequency vibrations are often masked by other imperfections in the system such as imbalanced or misaligned shafts. Since the emissions are highly attenuated, close coupling with the sensor is necessary. The close coupling of the sensor would imply that the emissions could be attributed to bearing degradation rather than to other physical defects in the system, such as misalignment and imbalance. [8]

Cavitation causes poor efficiency as well as accelerated wear on the pump components. This phenomenon occurs when the absolute static pressure falls below the saturated vapor pressure within the pump causing the fluid to be vaporized [8]. In [8] the authors show as pump cavitation increases, the acoustic emissions increase across the ultrasonic spectrum fairly uniformly, both in an industrial setting as well as on a bench test. However, sensor placement is critical in this procedure as the response varies by location and care should be taken to find an optimum location. By use of this method, cavitation can be

detected non-intrusively before significant effects can be seen on the pump's performance. [9]

Therefore, continuous monitoring of the ultrasonic acoustic emission changes in the pump allows the operator to observe the health of the pump and if necessary, perform timely preventive maintenance, which would lead to a reduced failure rate and reduced plant downtime. This project developed a system for continuous remote wireless monitoring of barowell pump health through ultrasonic monitoring.

The system used a COTS 900 MHz modem as well as an Analog Devices microcontroller. The ultrasonic amplitude response of the microphone was digitized using the 12-bit A/D of the microcontroller. The data was then formatted for transmission and sent asynchronously to the modem for transmission to a host computer for a user to analyze the data. Due to the barowell pumps being used in pairs, the system was designed with two-channel capacity. The system used a 4 kHz multiplexed A/D to obtain a 2 kHz sample rate per channel and the data was sent out at baud rate of 115200 via a 900 MHz serial RF modem. After development, the system performed the desired function of transmitting the ultrasonic vibration data to the user for evaluation on the pumps health. Data was reliably transmitted at 10mW over the air to a host computer located approximately 120 ft where it was successfully processed.

This thesis should be viewed as a proof-of-concept experiment as this solution has not been implemented in the field. A pilot installation will be

implemented to monitor two pumps in a single test cell before base wide implementation.

This study addresses the development of a system to monitor the barowell pumps remotely. The background of the system is discussed in Chapter 2. This chapter addresses the hardware decisions, including the wireless modem and the transducer selection. The design process is described in Chapter 3. This chapter discusses the interfaces, analog signal processing and software considerations. Packaging and other design considerations are discussed in Chapter 3. The fourth chapter discusses the implementation and testing of the monitoring system. It addresses problems faced in the software and hardware development as well as design changes. Findings and results are shown in Chapter 5. Chapter 6 addresses future development of the system, including expanding this design to other aspects of the plant monitoring for improved maintenance and reliability.

2. Approach

Continuous health monitoring of the barowell pumps was accomplished with an UE Ultra-Trak 750 ultrasonic sensor from UE Systems which permits the prediction of mechanical failure by sensing ultrasonic amplitude changes. This microphone is tuned for response centered at 40 kHz ± 2 kHz and has a bandwidth of approximately 2 kHz [2].

The output of this sensor is digitized at the pump and then sent via a radio link to a data acquisition system. This system monitors the data and determines the health of the pump over time. With monitoring, it is possible to notice trends in the pump vibrations and detect probable failures.

Due to the location of the pumps, running cable to the locations would be difficult and costly. Also, digitizing the data at the source reduces the noise in the raw analog signal. As well as, additional systems to monitor other plant equipment can be installed without having to incur the initial cost of running conduit and cable. These reasons along with a study aimed at experimenting with wireless methods for plant monitoring at AEDC justify this experiment with wireless monitoring of the barowell pump system. With wireless communication, any computer within range with the proper credentials, hardware and software, will be able to monitor the pumps. Since the pumps are used in pairs, the system contains two channels to monitor both of the pumps with one transmitter.

A suitable method was determined to filter, digitize, and send the ultrasonic data to the processing computer. The Ultra-Trak 750 automatically performs the necessary detection of the ultrasonic amplitude and provides both

heterodyned audio (0 to 2 kHz) and demodulated logarithmic amplitude outputs. The demodulated logarithmic output provides indication of the power located in the 4 kHz band centered at 40 kHz. It provides an output proportional to level sound pressure level. At maximum sensitivity, a full-scale change in the output is equivalent to approximately a 60 dB change in sound pressure level (SPL). Therefore, the Ultra-Trak 750 outputs can be lowpass filtered, digitized by a microcontroller, and transferred via the radio link to the processing computer. The Analog Devices ADuC 7024 microcontroller was used, which is capable of digitizing the signal with 12 bits of precision and is capable of being efficiently programmed in the C programming language [10].

The radio frequency band to be used for wireless transmission of the data was discussed with the Spectrum Manager at AEDC. It was determined that the 900 MHz Industrial, Scientific, and Medical (ISM) band is available for use. The use of a frequency hopping technique was also discussed and this option was preferred by AEDC's standards. Therefore, Frequency Hopping Spread Spectrum (FHSS) was selected with hopping frequencies varying from 902 to 928 MHz.

The MaxStream 9XTend™ modem was chosen to transmit the digitized data. This modem is FCC approved, has the bandwidth needed to transmit the data, and permits 256-Bit Advanced Encryption Standard (AES) encryption, which is necessary to satisfy AEDC security requirements. This modem has a selectable transmit power setting with a maximum output of 1 Watt. This is ample power to transmit over the distance from the barowell pump to the

receiving computer, which may be a couple of hundred feet away. It should be noted that the minimum power setting that is able to transmit the signal accurately would be used. This modem offers ten selectable hopping sequences; by selecting one of the sequences, channel independence can be achieved which allows for multiple systems using this same technology. [11-12]

The ability to digitize and transmit the heterodyned audio output of the sensor was included as an additional feature because the output was available from the transducer. In discussion with the system engineers, the demodulated output is the only necessary output of the system. The audio output is primarily used on handheld systems, which the user could listen to the acoustic emissions in various locations in the field; one primary use for this function would be ultrasonic leak detection.

NASA research suggests that a change in the baseline of the ultrasonic amplitude of 8dB or more is an indication that the pump bearings may be entering a failure mode [3]. Since the main concern of the measurement deals with a baseline measurement and long-term trends in the data, a bandwidth of 500 Hz is more than ample. The extra spectral information (above baseband) exists in case other useful information exists in this region upon implementation. This was included to utilize the full capability of the system in case there is desire in the future to study the additional spectral information.

To achieve two channels of data, the sample rate of 4 kHz multiplexed between the channels is near the maximum theoretical sample rate due to the maximum transmission rate of the modem, 115200 bps, and the transmitted data

packet format. This implies a 2 kHz sample rate per channel. Therefore, a data packet (12 samples or 8 bytes) is generated every 3ms. Necessary precautions were taken to avoid a buffer overrun and stack overflow in the microcontroller. The RF modem also played an integral part in selecting the sample rate.

The modem used for the receiving side is the 9XTend-PKG-R™ RS-232/485 from MaxStream. The packaged modem can be seen in Figure 1[1]. The actual modem component of this device is identical to the Transmitting modem. However, this modem is packaged for easy hookup and communication with the serial port on a computer. The serial data is then input into a data acquisition system. This system displays and records the data for analysis.

[1] All Figures are located in Appendix A.

3. Design

The overall block diagram of the system can be seen in Figure 2. The components are discussed in detail throughout this chapter. The board contains 4 channels (2 per ultrasonic microphone), however only 2 channels are digitized during operation of the device.

3.1 Analog circuit design

The transducer used in the development of this device was the UE Ultra-Trak 750. This ultrasonic sensor offers a dynamic range of approximately 100dB. The sensor provides two outputs: an audio output as well as a current source output. The 100 mV rms full-scale audio output is heterodyned from 40 kHz to DC and proportional to the ultrasonic response. The current source output is 0 to 20 mA signal, proportional to demodulated logarithmic ultrasonic amplitude. The manufacturer gives the transfer function

$$dB = 2.4403 \cdot I_o - 6.5144$$

for the conversion from I_o in milliamps to sound pressure level (SPL) in decibels. This device is configured for structure borne ultrasonic detection. The transducer can be seen in Figure 3. [2]

Two separate front-end circuits were designed due to the separate outputs of the sensors. The first and primary circuit uses the recommended 249 ohm current sensing resistor (see Figure 4). The circuit seen in Figure 6 has a gain of 100 V/A thus resulting in a maximum output of 2.5 volts for 25 mA, which is the maximum output of the sensor.

The audio output signal processing is similar, but current to voltage conversion is not needed. In this case, the output of the Ultra Trak sensor is DC biased to 150 mV to account for the single side amplification. The circuit has a gain of 8.17 which results in a DC Bias of 1.23 V to provide an input range of 0 to 2.5 volts at the input to the A/D.

Using Texas Instruments FilterPro Software, an anti-alias low-pass filter was designed with a cut off frequency of 510 Hz. The filter response can be seen in Figure 5. The filter has a unity passband gain and is tied into the A/D channels on the ADuC 7024 where the signal is sampled at 2 kHz. The resulting circuits can be seen in Figure 6 and Figure 7. The same filter was used for both input signals. [13 – 14]

After the analog circuitry, the data enters the ADuC 7024 through the A/D input where the data is multiplexed in and digitized. Due to bandwidth considerations, only 2 channels can be viewed at a time, either the audio or the current channels, and this is specified by the user.

The completed PC board for the transmitter can be seen in Figure 8. The electronic design and physical board layout was done by Dr. Bruce Bomar using Altium Designer 6 Software [15]. The board contains 4 channels available for A/D. The software in the microcontroller is selectable, which allows either the audio or the SPL channels to be selected for transmission.

3.2 Transmitting Software design

The software was written in C using the ARM IAR C/C++ compiler [16] for the Analog Devices microcontroller ADuC 7024. This chip contains a 12 Bit A/D converter as well as a standard UART. The channels, either the two audio or the two current channels, are sampled at a 2 kHz rate, which is accomplished by multiplexing the channels and sampling at 4 kHz. This results in a small phase shift between the two channels due to the signals being sampled at different instances in time. However, this may be ignored due to the independence of the channels. When an A/D sample is ready, an interrupt request is generated and the new A/D value is pushed to the stack. The A/D is 12-bit data and represents a 0 to 2.5 volt signal at the input. The data sample is sign extended to fill 16 bits for transfer as two bytes.

During the normal operation of the microcontroller, the process transmits the data in 29 eight-bit byte packets, which contains 12 data bytes (6 samples from each channel). The format of the packet can be seen in Figure 9. Byte 0 (0x80) is a synchronizing byte used to determine the start of a packet and to determine any lost data. The use of the 0x80 is for compatibility with the system already in use at AEDC. The receiving software looks for this byte to know the start of data. It should be noted that there is a possibility of the data containing a 0x80 in it and triggering the software; however, on the next iteration the sync will be lost and the data will eventually synchronize on the true byte 0 in the data packet. It should be noted that the temperature and battery voltage in the packet is ignored, as they have no relevance to the data. This packet format was

selected for compatibility with an existing data acquisition program used at AEDC, the Computer Assisted Dynamic Data Monitoring and Analysis System (CADDMAS). This software was developed at AEDC as an analysis tool for turbine engine testing. CADDMAS has since been expanded to process serial data for other applications [17]. The overall data acquisition and transmission process can be seen in the flowchart in Figure 10.

A separate program was written to initialize the parameters on the modem through the microcontroller. This program sets up the necessary registers to enable encryption, proper baud rate, transmission power, and communication channel. During programming, the final command sent to the modem instructs the device to write the settings to the non-volatile memory, therefore the modem setup only needs to be performed when a parameter needs to be changed. After the modem has been successfully programmed, a message is transmitted via RF to a receiving modem to verify proper setup. At this point, the main operational code may be loaded to the microcontroller and data is acquired. The main code starts running on power up of the microcontroller.

3.3 Receiver Software Design

Receiver checkout software was developed in LabView 8.2. This software is used for setup and checkout of the monitoring system. Once checkout is complete, the system is to be used with the CADDMAS, for data logging and commonality with other systems base wide. The flow chart of the software can be seen in Figure 11. The software takes in the asynchronous data and waits

until the synchronizing byte is found (0x80). After the byte is found, the software processes the next 28 bytes of the data in the format that was shown in Figure 9. After the data is synchronized, the system logs if there is any loss in synchronization to have a record that data may have been lost. The system also checks for lost data by comparing the current sequence number to the previous. The sequence numbers should only differ by 1.

The receiving modem must first be initialized to the proper set up, including baud rate, encryption code, and other necessary parameters. A LabView Virtual Instrument (VI) was written to perform this task much like the code written to program the transmitting modem. This allows the user to set up the modem to his/her requirements.

3.4 Layout Considerations

The power supply used is manufactured by Astrodyne and is capable of supplying ±12 VDC, as well as 5 VDC. The 5 VDC supply is used to power the RF Modem and a 3.3 V regulator. The regulator supplies the microcontroller and the analog filter circuit. The ultrasonic microphones are supplied 24 volts, which is obtained from sequencing the 12VDC supplies.

The layout of the circuit board took into consideration the Astrodyne power supply. The circuit board has the same dimensions as the power supply footprint and is mounted above the supply in the enclosure. This allows for the box to be small and aids in placement in the field.

The transmission side of the system is mounted inside of a Stahlin Enclosure with inside dimensions of 148.3mm x 97.8mm x 113mm (5.84” x 3.85” x 4.45”). The ultrasonic microphones are tethered to the outside of the enclosure. The antenna is mounted externally to the box for better transmission. The populated enclosure can be seen in Figure 12. It should be noted that the antenna is not externally mounted in the figure, which is possible since the enclosure is not metallic.

4. Implementation and Testing

After completion of the design, several issues were discovered. The most significant issue was in the timing. During the initial design phases, it was thought that the use of an interrupt to control data flow would not be necessary. However, due to the data packet format it was quickly discovered that samples were missing from the data packet.

In the first version of the software, the microcontroller was communicating with the receiving modem at a rate of 230,400 bps, while the modem was transmitting the data at 115,200 bps. This was thought to be a reasonable approach since the modem has a buffer of approximately 2.1Kb. Due to the loss of data, which was believed to be caused by the overflow of the buffer, a different approach was used. This approach queued the data in the stack within the microcontroller, instead of being buffered on the modem. This allowed a transmission rate of 115,200 bps to the modem as well.

Implementing this change helped, but did not completely solve the problem. It was then noticed that the first five bytes, or header, of the data packet took 434 microseconds to transmit from the microcontroller to the modem. Since the sample time of the A/D is 250 microseconds, at least one sample was lost between every data packet. This problem led to the implementation of a software interrupt to catch the A/D data when the A/D status bit was set. The data was then pushed to the stack where it can be exported in the next data packet. See the flowchart found in Figure 10 for a visual explanation.

During the implementation and testing, a bug was found in the LabView receiver software. This caused a glitch in the data when the most significant bit changed. It was discovered that this was due to the conversion time of the data in the packets. The conversion software was optimized, thus resolving this issue.

5. Findings and Results

5.1 Filter Verification

The response of the filter was verified by injecting a signal into the input of the analog circuitry. A coupling capacitor was installed in the lead injecting the signal to prevent overloading the sensing resistor. Installing the capacitor introduced a low cutoff frequency of approximately 100 Hz; therefore, the filter was verified between 200 and 1000 Hz. Various frequencies were injected at the same amplitude and an oscilloscope was used to measure the waveform at the output of the filter. Texas Instruments FilterPro software was used to generate the nominal response. The plot in Figure 13 shows the comparison of the curves. The filter responded as expected.

5.2 End-to-End Verification

After implementation, the system works as desired. Data is available on two separate channels for monitoring. Random impulses were injected to determine channel independence and cross talk between the channels was found to be negligible. Figure 14 shows excitation on channel 1. It can be seen in the figure that channel 2 remains quiet. A distance test was performed with a power setting of 10 mW and data was available at over 120 feet which exceeds the requirement for location in the field. Sinusoidal signals were also injected to determine proper bit orientation and data manipulation. Figure 15 shows a 200 Hz sine wave. It should be noted that two cycles of the sine wave are completed in 20 samples thus verifying the proper sampling rate.

The current channels were also calibrated by injecting a current to determine the transfer function from counts to milliamps.

$$A(x) = 0.0061231x - 0.26681$$
$$B(x) = 0.0061727x - 0.23813$$

This calibration can be used to determine the SPL from the transfer function given in the data sheet (this data can be found in the background section).

A brief CADDMAS demonstration was performed to verify proper operation and ability to interface with the system. The CADDMAS was able to process and display the incoming data. A screenshot of this experiment can be seen in Figure 16. In the screenshot, the proper calibration coefficients are not being implemented as this experiment was used to verify proper data packet format and compatibility with the CADDAMS system.

To verify the response of the system to a real acoustic signal a transducer was mounted to a piezoelectric speaker. The test rig for this verification experiment can be seen in Figure 17. To mount the microphone to the speaker, an aluminum plate was mounted to the face of the speaker to create a sealed chamber. The microphone was mounted to the center of the plate on the outside of the chamber. Using a function generator to generate a 40 kHz tone, the output was monitored and the ultrasonic amplitude can be seen in Table 1. In the table, it can be seen that the SPL increased as the intensity of the signal went up.

Table 1: Ultrasonic amplitude due to 40 kHz tone

Input to Speaker (Vrms)	Output from Sensor (dB)
1.0	5.6
2.0	10.1
3.0	14.2
4.0	16.2
6.0	18.4

For final end-to-end verification, the microphone was mounted, using the mounting system provided by the manufacturer, to two different 3” cooling fans. One of the fans was used as a baseline while the other one had been removed as the bearings were failing. Using the manufacturers recommend sensitivity setup, the sensitivity was adjusted using the good fan as a baseline. The manufacturer’s recommended that under normal operating conditions the loop current should be between 4.3 and 5 mA. A plot of the data from the good fan can be seen in Figure 19. After the microphone was setup and a baseline established, the transducer was mounted to the failing fan (Figure 18). A plot of the data can be seen in Figure 20. From the figures, the shift in the relative SPL of the signal can be seen due to the failing fan.

6. Future Development Considerations

In future development, and before final release for execution, the board layout should be redesigned. The initial layout of the board had the power and ground pins for the wireless modem swapped that was corrected when discovered during the build up. This correction should be incorporated into the layout of the board in future builds. There should also be user feedback elements such as LED lights to aid in troubleshooting should a problem arise. Upon execution of the unit, the sensitivity of the transducer may have to be adjusted. This adjustment can be made through the software via a TTL pulse train. The user's manual describes this process in detail.

Other future development considerations would include implementing a networked system to poll different sensors in the field to monitor a variety of different parameters leading to wireless plant wide maintenance monitoring. The current modem supports up to 256 nodes communicating with one receiver. CADDMAS software would have to be developed to allow this polling as the data packet format would now include a header from the modem to identify the device.

Neural networks could also be developed which would allow independent characterization of different devices under test to determine maintenance schedules ultimately resulting in less downtime and improved reliability.

7. Summary

This thesis presented a way to monitor remotely and wirelessly the bearings in the barowell pumps at AEDC. This system can be used to develop maintenance schedules for these bearings resulting in reduced downtime and improved reliability with the introduction of preventive maintenance.

The system was developed using a COTS modem and interfaced to a microcontroller from analog devices, which was used to digitize the data. The front end was custom developed for this application, using the manufacturer's recommended sensing circuits and a lowpass anti-aliasing filter. On the receiving side a simple verification program was written in LabView to process the data in real time. In the field, in practice, the system interfaces with the CADDMAS software for real time monitoring and data collection.

In general the system provides a reliable method to transmit data from the ultrasonic microphones over the air to be processed. However, to implement complete plant monitoring, a ZigBee network along with other technology, should be investigated. The use of the MaxStream modem worked well for single transmitter systems. This system would also work well for two independent systems as they could be set on different hopping frequencies. It was shown that the system showed changes in the ultrasonic amplitude in a simulated lab environment.

Additional functions could be added to the CADDMAS system to allow the system to flag a large change in the ultrasonic intensity of the pumps. Overall, a plant monitoring system that could process the data and flag bad pumps and

even notify planners of a potential issue to initiate tech support may be developed.

References

References

[1] "Arnold Engineering Development Center." http://www.arnold.af.mil/shared/media/document/AFD-070131-094.pdf

[2] "UE Ultra-Trak 750", User's Manual, UE Systems.

[3] Goodman M. A. "Ultrasonic Tips on Monitoring Bearing for Proper Lubrication and Wear." UE technical report.

[4] Bandes, A., "What You Need to Know about Ultrasound CBM", www.pump-zone.com, December 2006.

[5] Ensor, LC and Feng, CC. "A Study of the use of Vibration and Stress Wave Sensing for the Detection of Bearing Failure." NASA Engineering Report, 1975.

[6] Alfayes, L and Mba, D. "Detection of incipient cavitation and determination of the best efficiency point for centrifugal pumps using acoustic emission." IMechE Vol. 219 Part D (2005): 327-344.

[7] Mba, D. "Applicability of acoustic emissions to monitoring the mechanical integrity of bolted structures in low speed rotating machinery: case study." NDT&E International 35(2002): 293-300.

[8] Mba, D and Rao, R. "Development of Acoustic Emissions Technology for Condition Monitoring and Diagnosis of Rotating Machines: Bearings, Pumps, Gearboxes, Engines, and Rotating Structures." The Shock and Vibration Digest Vol. 38, No 1 (2006): 3-16.

[9] Neill, GD, Reuben, RL, Sanford, PM, Brown, ER, Steel, JA. “Detection of incipient cavitation in pumps using acoustic emission.” IMechE Vol. 211 Part E (1997).

[10] “Precision Analog Microcontroller, 12-Bit Analog I/O, ARM7TDMI® MCU”, Data Sheet, Rev B, Analog Devices, Inc.

[11] “9XTend-OEM RF Module”, Data Sheet, MaxStream.

[12] “9XTend-PKG-R™ RS-232/485 RF Modem”, Data Sheet, MaxStream.

[13] Bishop, J, Trump, B, Stitt, R. “FilterPro™ MFB and Sallen-Key Low-Pass Filter Design Program.” Texas Instruments Application Report. 2001.

[14] “Analysis of Sallen-Key Architecture.” Texas Instruments Application Report. 2002.

[15] Bruce W. Bomar, Private Communication

[16] “ARM® IAR C/C++ Complier Reference Guide”, Thirteenth edition: June 2006.

[17] Tibbals, T.F., Hayes, T.W., Bapty, T.A., and Bomar, B.W., “CADDMAS: A Real-Time Parallel System for Dynamic Data Analysis” AEDC-TR-95-27, 1995.

Appendices

Appendix A: Figures

Figure 1: Receiving RF Modem

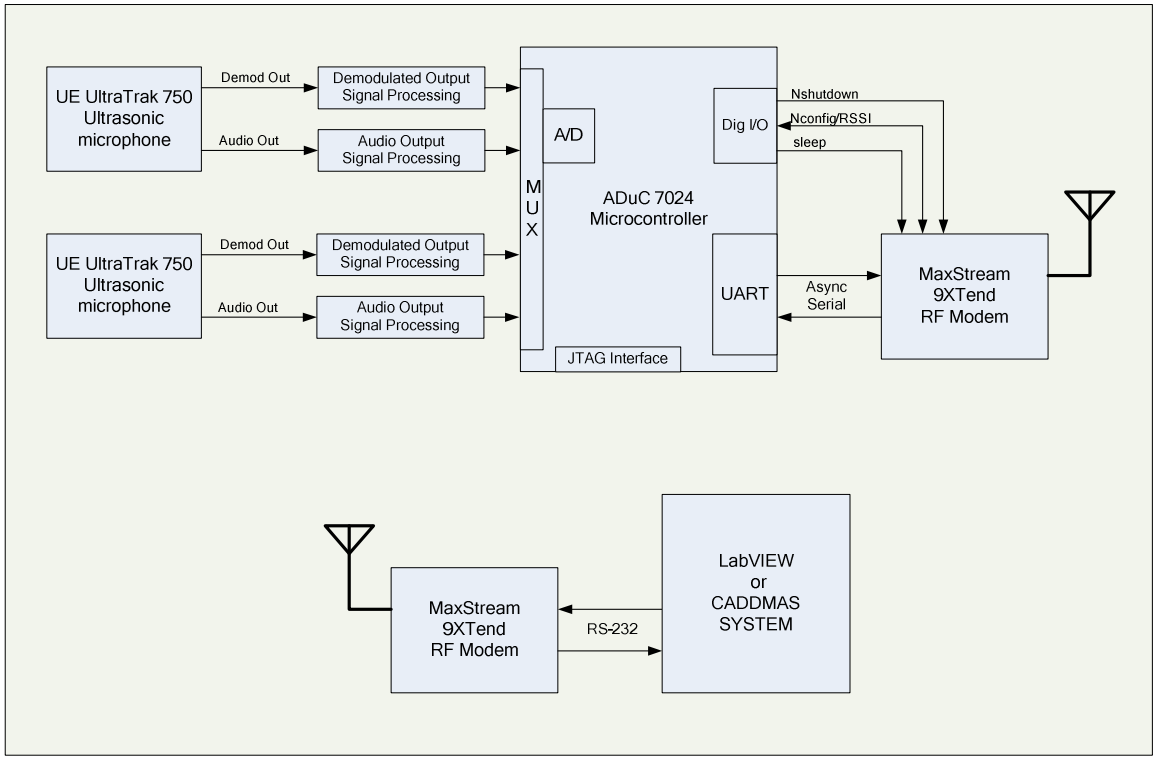

Figure 2: Hardware Block Diagram

Figure 3: Ultrasonic Transducer

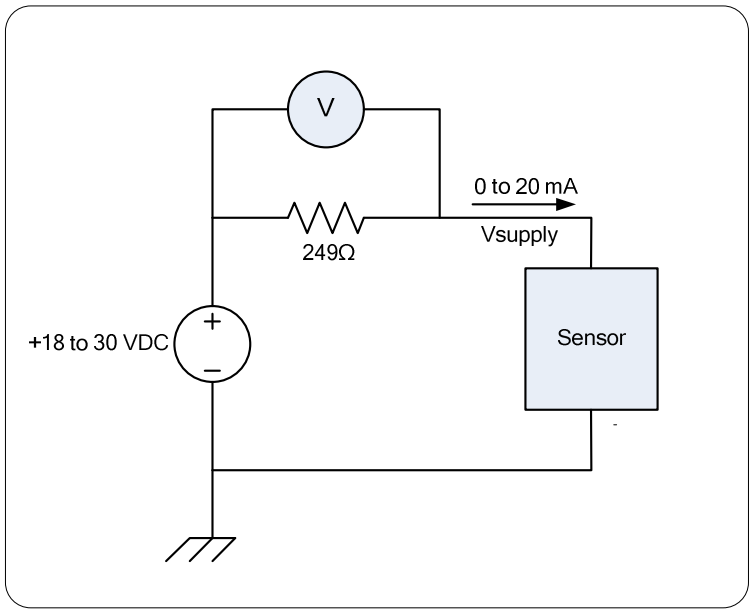

Figure 4: Loop Power Connection Diagram

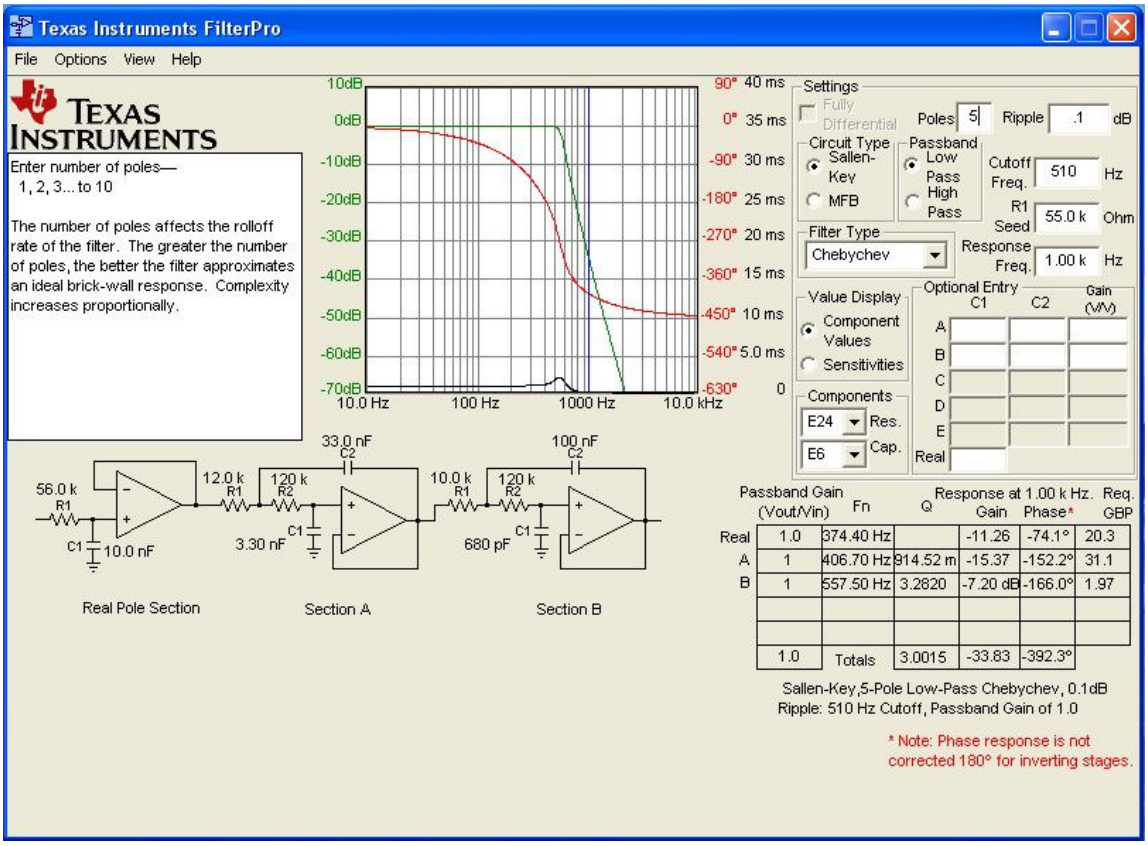

Figure 5: Filter Response Curve

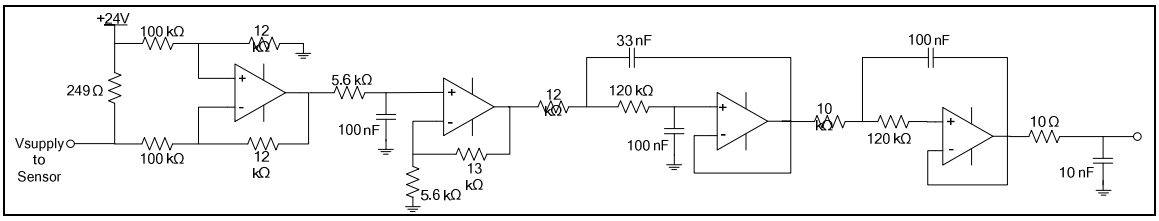

Figure 6: Signal Processing for Demodulated Output

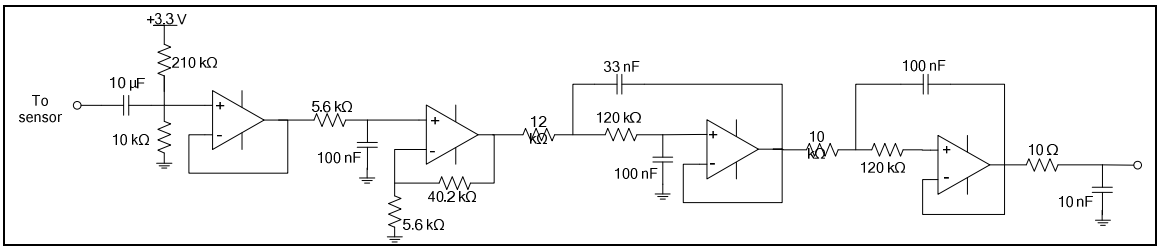

Figure 7: Signal Processing for Heterodyned Output

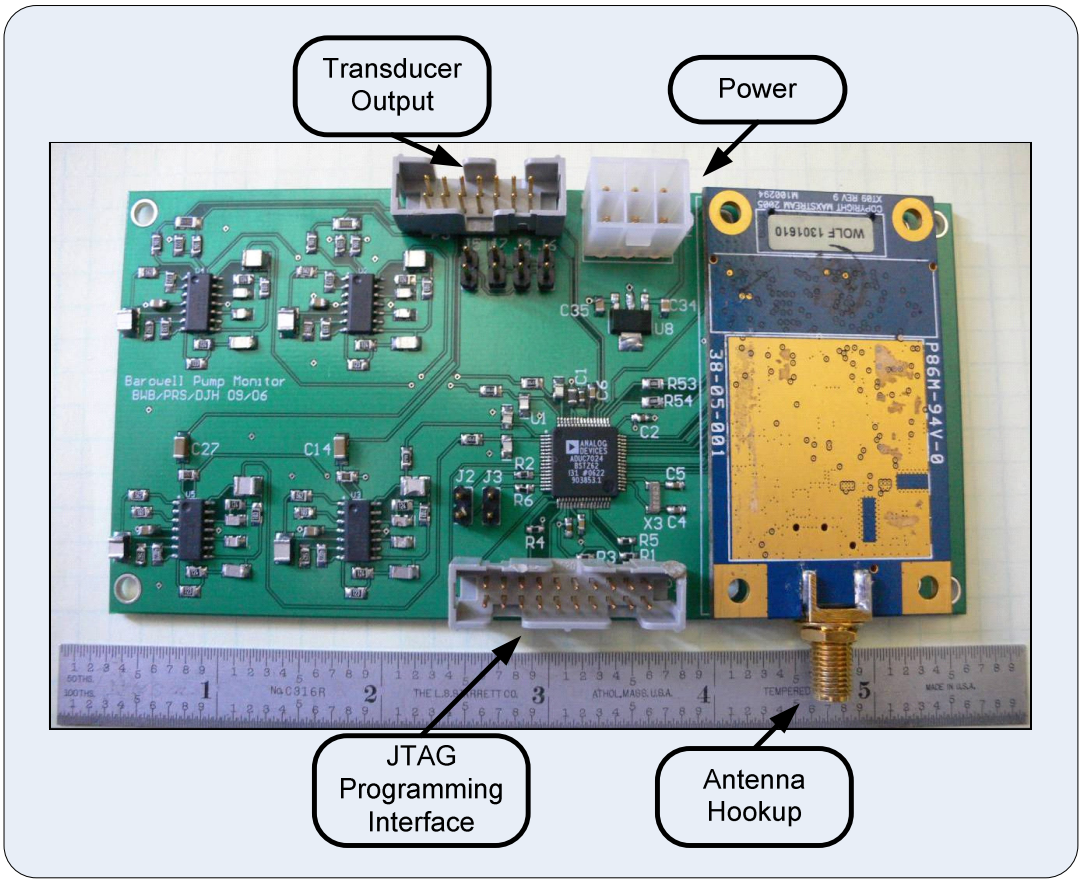

Figure 8: Transmission PC board

0	Sync (0x80)
1	Sequence Number (High Byte)
2	Sequence Number (Low Byte)
	Temperature (Not Used)
	Battery Voltage (Not Used)
	Channel A MSB Sample 1
	Channel A LSB Sample 1
	Channel B MSB Sample 1
	Channel B LSB Sample 1
	Channel A MSB Sample 2
	Channel A LSB Sample 2
	Channel B MSB Sample 2
	Channel B LSB Sample 2
	Channel B MSB Sample 6
28	Channel B LSB Sample 6

Figure 9: Data Packet Format

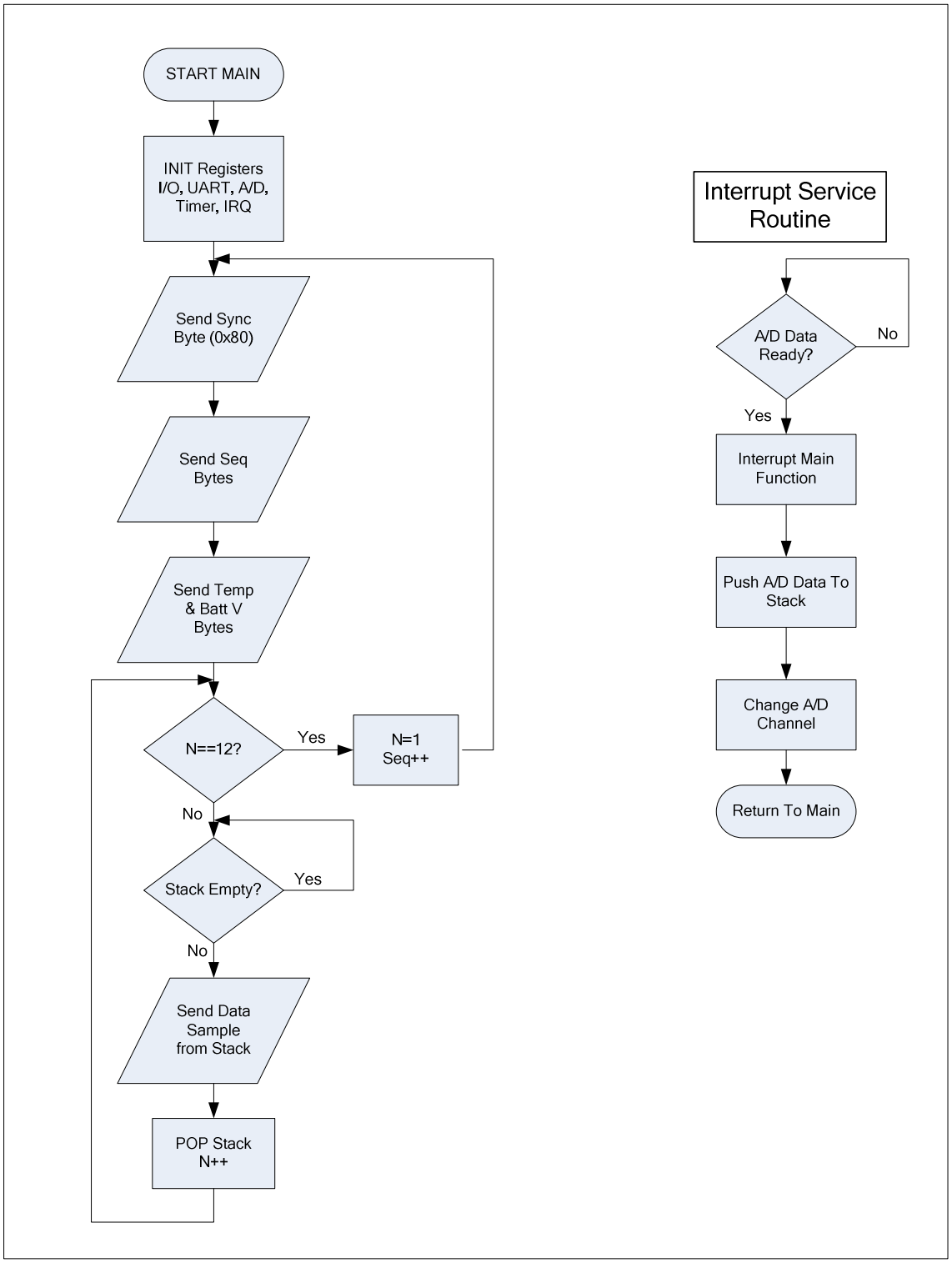

Figure 10: Transmitting Software Flow Diagram

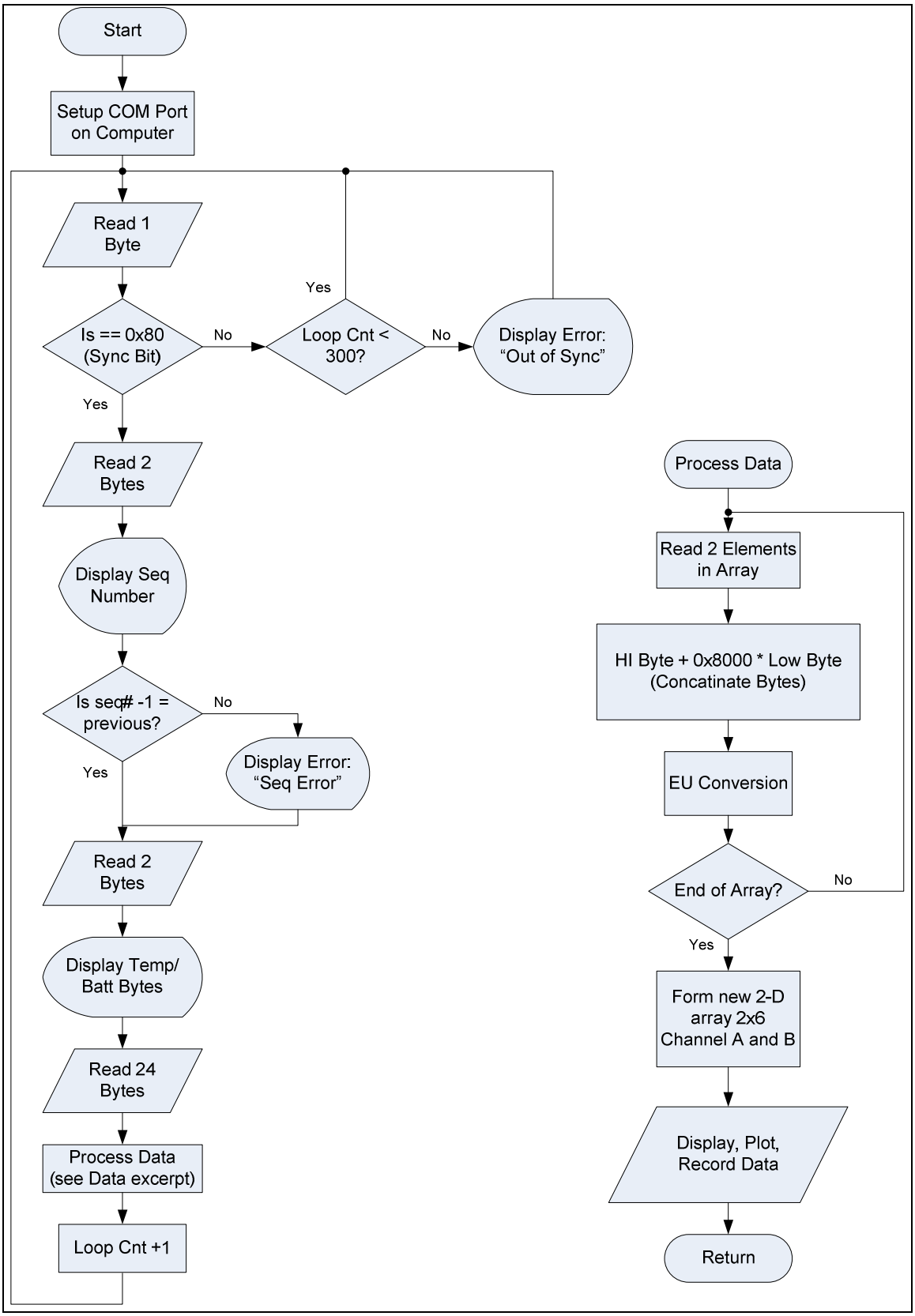
Start
Setup COM Port on Computer
Read 1 Byte
Is == 0x80 (Sync Bit)
No
Loop Cnt < 300?
Yes
No
Display Error: "Out of Sync"
Yes
Read 2 Bytes
Display Seq Number
Is seq# -1 = previous?
No
Display Error: "Seq Error"
Yes
Read 2 Bytes
Display Temp/ Batt Bytes
Read 24 Bytes
Process Data (see Data excerpt)
Loop Cnt +1
Process Data
Read 2 Elements in Array
HI Byte + 0x8000 * Low Byte (Concatinate Bytes)
EU Conversion
End of Array?
No
Yes
Form new 2-D array 2x6 Channel A and B
Display, Plot, Record Data
Return

Figure 11: Receiving Software Flow Diagram

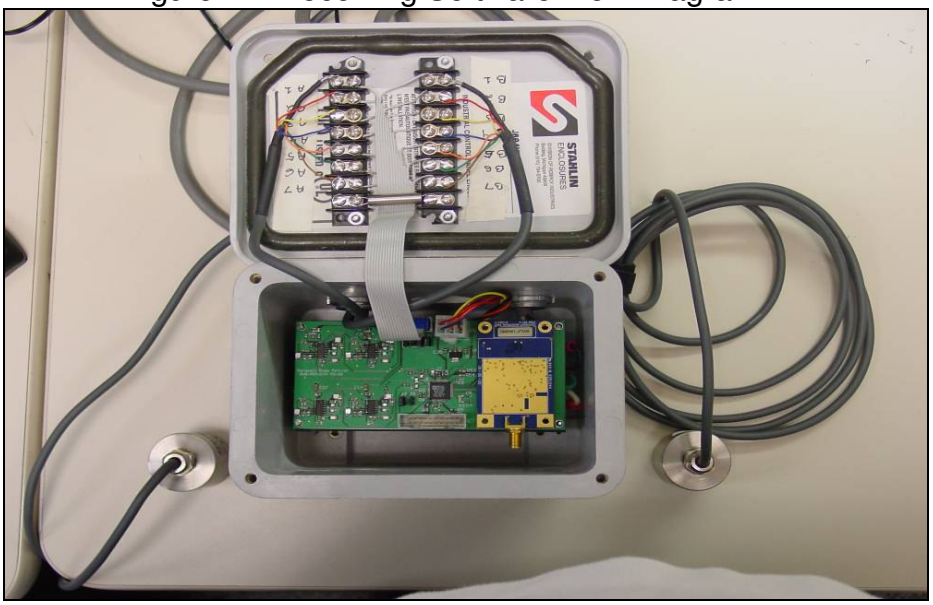

Figure 12: Transmitting Enclosure

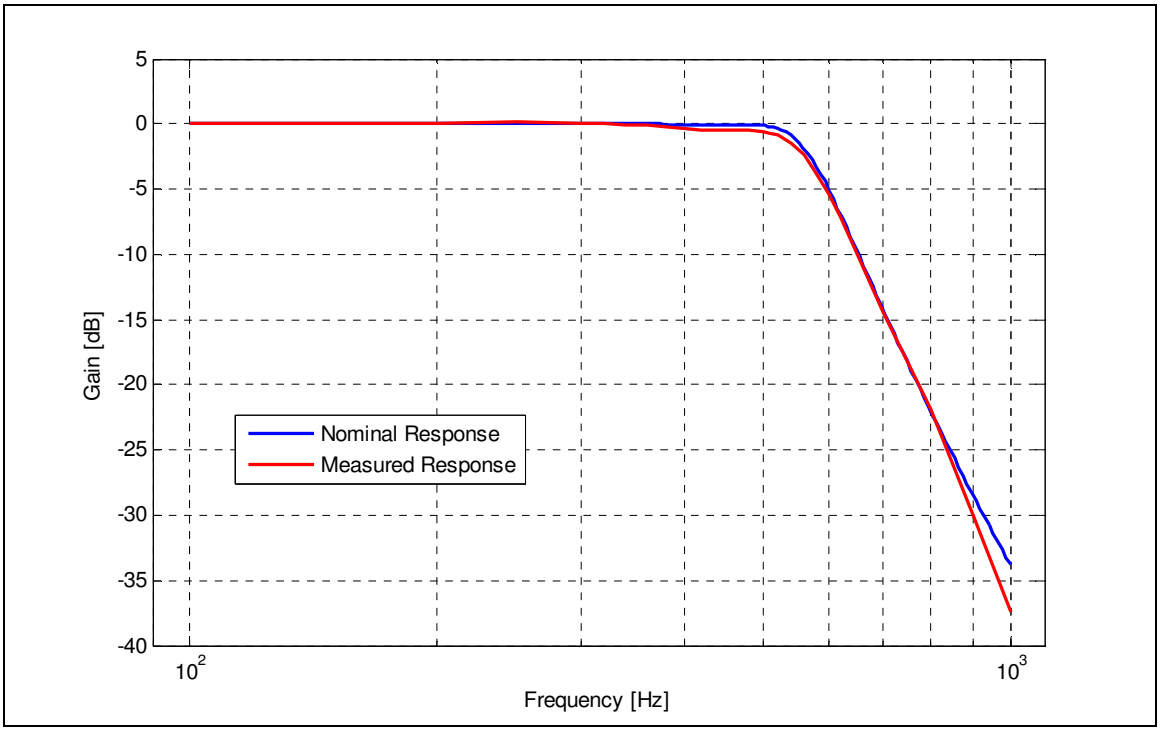

Figure 13: Filter Verification Plot

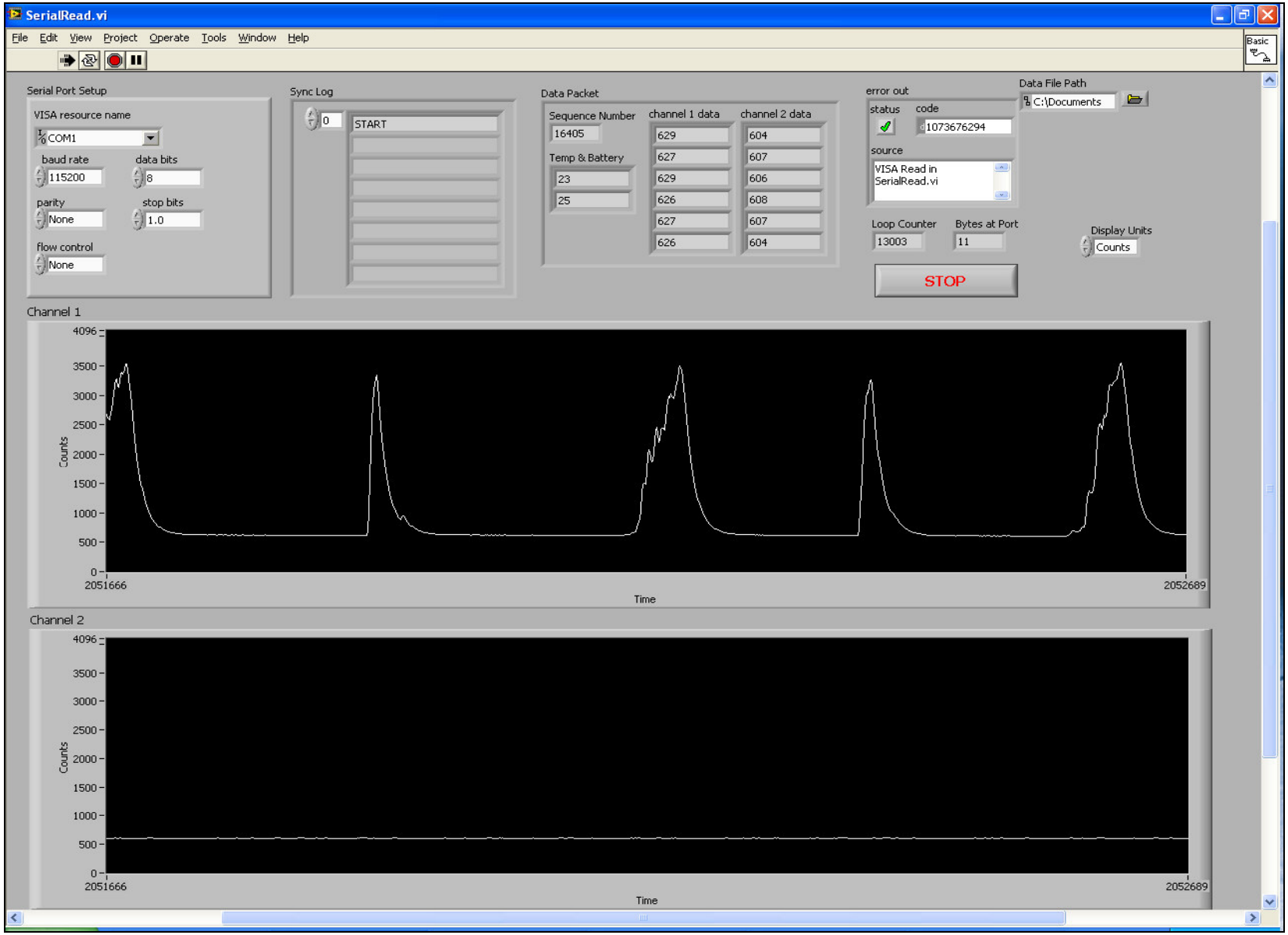
SerialRead.vi
File Edit View Project Operate Tools Window Help
Basic
Serial Port Setup
VISA resource name
COM1
baud rate
115200
data bits
8
parity
None
stop bits
1.0
flow control
None
Sync Log
0
START
Data Packet
Sequence Number
16405
Temp & Battery
23
25
channel 1 data
629
627
629
626
627
626
channel 2 data
604
607
606
608
607
604
error out
status
code
1073676294
source
VISA Read in SerialRead.vi
Data File Path
C:\Documents
Loop Counter
13003
Bytes at Port
11
Display Units
Counts
STOP
Channel 1
4096
3500
3000
2500
2000
1500
1000
500
0
Counts
2051666
2052689
Time
Channel 2
4096
3500
3000
2500
2000
1500
1000
500
0
Counts
2051666
2052689
Time

Figure 14: Response test for channel 1

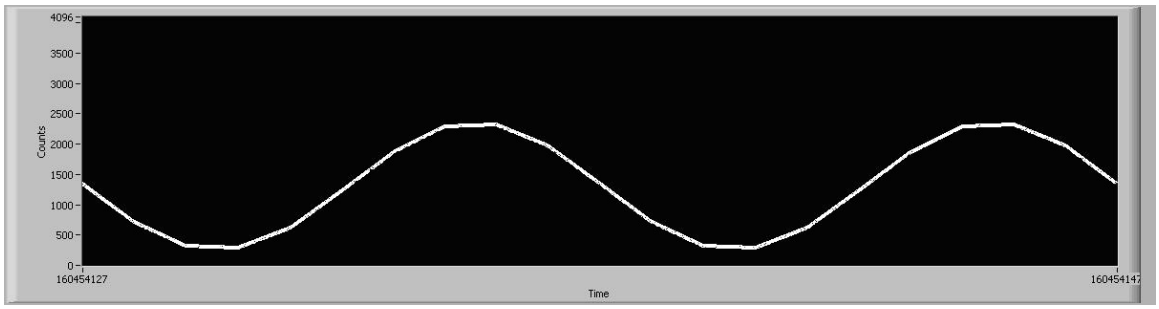

Figure 15: Twenty Samples of a 200Hz Sine wave

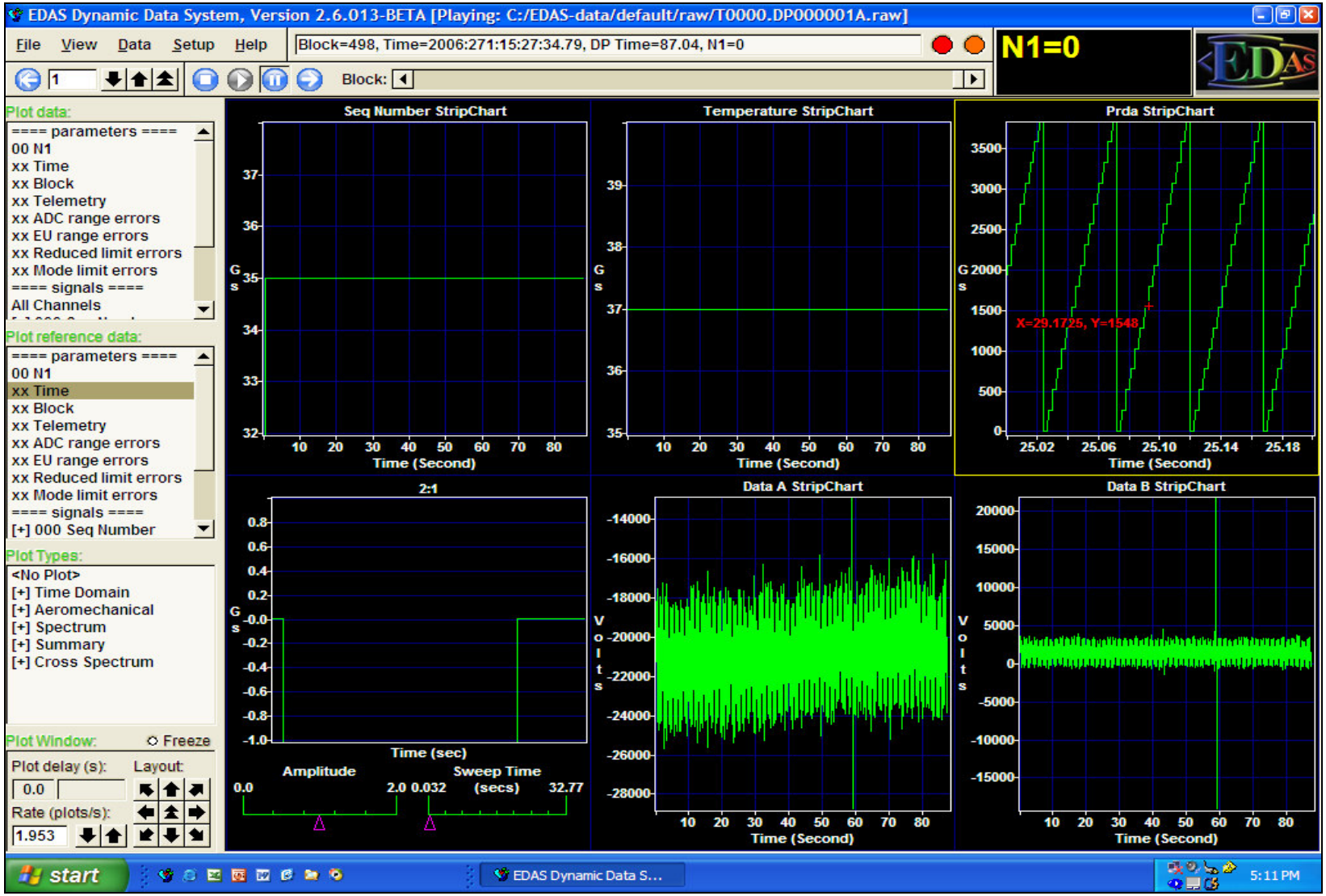

Figure 16: CADDMAS Screenshot of Barowell Output

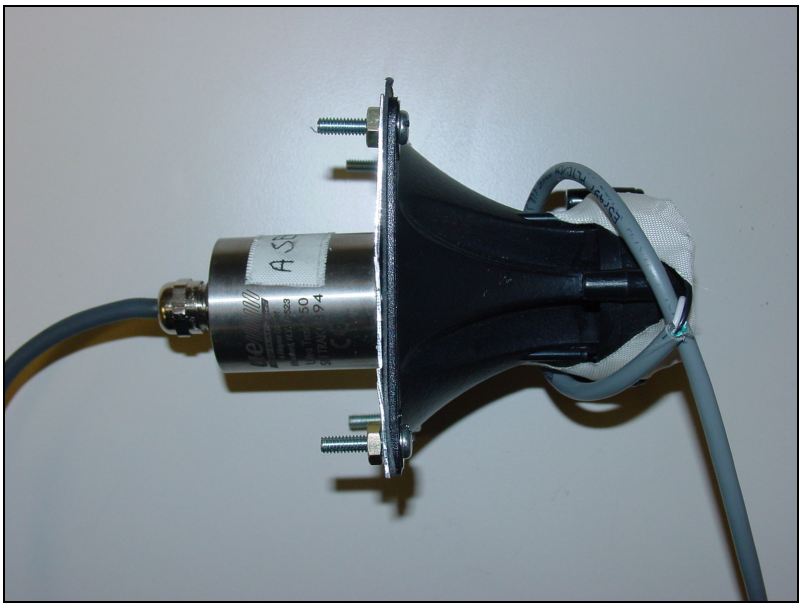

Figure 17: Speaker Test Rig

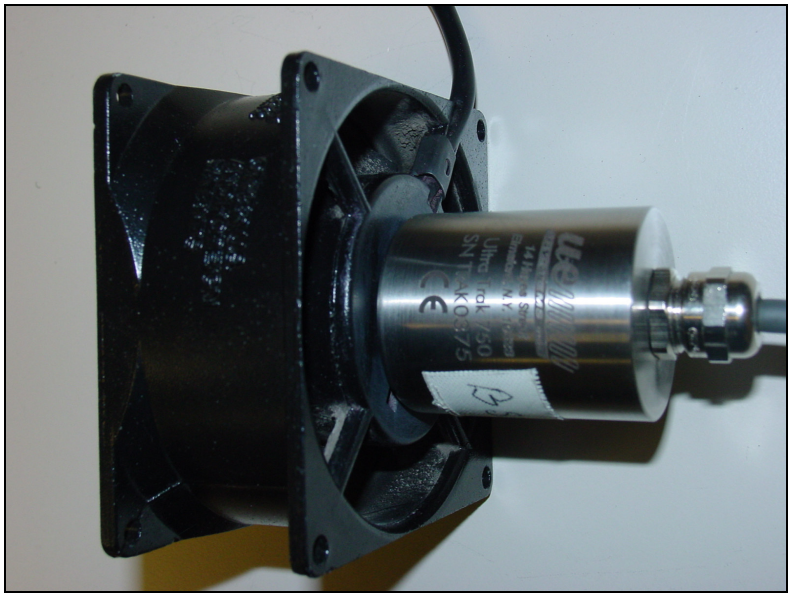

Figure 18: UE microphone bonded to failing cooling fan

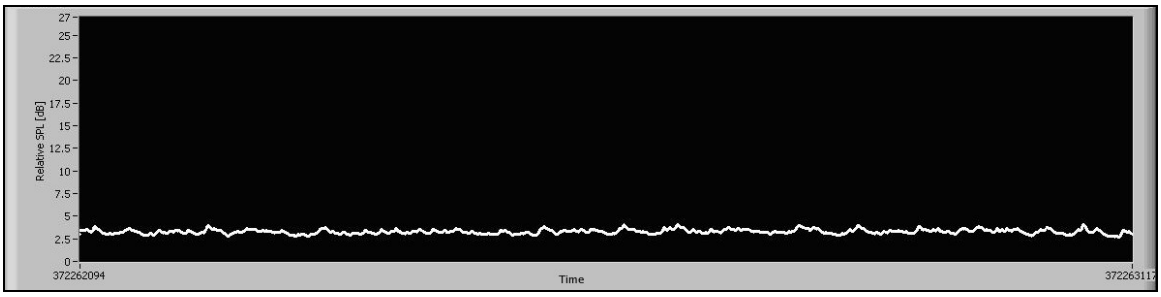

Figure 19: Baseline data from cooling fan

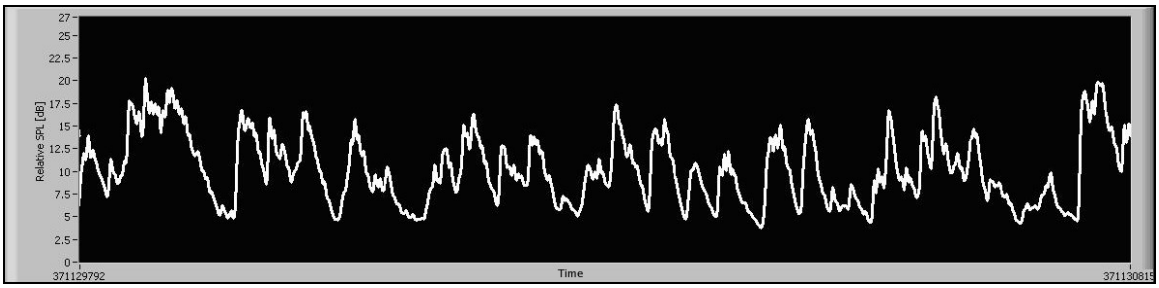

Figure 20: Data from failing cooling fan

Appendix B: List of Acronyms

A/D – Analog to Digital Converter
AE – Acoustic Emission
AEDC –Arnold Engineering Development Center
AES – Advanced Encryption Standard
bps – Bits Per Second
CADDMAS – Computer Assisted Dynamic Data Monitoring and Analysis System
COTS – Commercial Off-The-Shelf
dB – Decibel
DC – Direct Current
FCC – Federal Communications Commission
FHSS – Frequency Hopping Spread Spectrum
Hz – Hertz
I/O – Input/Output
IEEE – Institute of Electrical and Electronics Engineers
IRQ –Interrupt Request
ISM – Industrial, Scientific, and Medical
JTAG – Joint Test Action Group (IEEE 1149.1)
Kb – Kilobyte
kHz – Kilohertz
LED – Light Emitting Diode
LSB – Least Significant Bit/Byte
mA – Milliamp
MHz –Megahertz
mm – Millimeters
ms – Millisecond
MSB – Most Significant Bit/Byte
MUX – Multiplexer
mV – Millivolt
mW – Milliwatt
NASA – National Aeronautics and Space Administration
PC – Printed Circuit
RF – Radio Frequency
RMS – Root Mean Squared
RS 232/485 – Recommended Standard 232/485
SPL – Sound Pressure Level
TTL – Transistor-Transistor Logic
UART – Universal Asynchronous Receiver/Transmitter

VI – Virtual Instrument

Vita

Paul Robert Schwer was born in Oswego, NY on February 13, 1982. He moved to Middle Tennessee in November 1985. Paul graduated from Tullahoma High School in 2000. From there, he went on to Tennessee Technological University in Cookeville, TN and received a B.S. in Electrical Engineering in 2004. After receiving his degree, Paul went on to work in the Information Technology department at Arnold Air Force Base. Once there, he continued his education at the University of Tennessee Space Institute in Tullahoma, TN. In May of 2008, Paul received his Master of Science degree in Electrical Engineering.