A STUDY OF THE SURFACE FRICTIONAL CHARACTERISTICS OF ION EXCHANGE RESIN PARTICLES IN CONTACT WITH A SOLID SURFACE

A THESIS

Submitted in
Partial Fulfillment of the Requirements
for the Degree of
Bachelor of Science
in
Chemical Engineering

---

by

Sammie Dale Clinton
and
Thomas Thane Smith, Jr.

University of Tennessee
Knoxville, Tennessee
June, 1956

ACKNOWLEDGEMENT

The authors wish to express their appreciation to Professor F. N. Peebles for his timely advice and aid in carrying out this investigation; to Messrs. E. H. Honeycutt, Sr., and H. B. Thompson for their work in building the equipment; and to Messrs. N. T. Anderson and G. M. Drake for their suggestions concerning properties of the ion exchange resin.

SUMMARY

Although much research has been carried out on the chemical and physical properties of ion exchange resins, very little is known about the pressure distribution within a resin bed and throughout an ion exchange column. Recent work involving a moving resin bed within an ion exchange column (continuous ion exchange) has resulted in a real need for information of this nature. This thesis has been undertaken as an effort to develop an experimental method for measuring the pressure relationships within a resin bed and column and to determine the coefficient of friction between the resin bed and the column wall. The evaluation of the friction force depended upon a differential equation developed for the system, which was to be checked with experimental evidence. It was also desired to determine the feasibility of the experimental method employed.

A column was designed containing a fine mesh screen to support the resin bed. This screen was supported from a bellows located at the top of the column. The bottom of the bellows was open to the column and the top was enclosed in a pressure chamber. Pressure in the chamber was varied to maintain a constant reference position of the bellows. By using the pressure differential across the bellows, the liquid pressure drop across the resin bed, and the weight of the resin bed, a coefficient of friction was calculated. Operations were

carried out at flow rates ranging from 0.3 to 2.0 gallons per minute. The liquid used was water. Resin bed lengths were varied from 0 to 2 inches. The ion exchange resin used was Dowex 50.

It was found that the resin friction factors were indeterminate (negative) for most of the cases studied. The differential equation developed for the system was based on the assumption of equally distributed forces within the resin bed. Since constant particle motion was observed within the bed during operation, there is some doubt that the differential equation actually describes the force system involved.

The experimental apparatus and the general experimental method was found to be feasible, although some modifications are needed to give the system more range of bed length and greater sensitivity. The calibration of the system using known weights resulted in an approximately linear relationship, but the accuracy of the calibration was rather poor because of the poor sensitivity of the bellows system.

TABLE OF CONTENTS

CHAPTER		PAGE
I.	INTRODUCTION	1
	General Theory	1
	Theoretical Equations	2
	Present Work	5
	Results	9
II.	EQUIPMENT	11
III.	PROCEDURE	16
IV.	DATA	21
V.	DISCUSSION OF RESULTS	34
	Qualitative Results	34
	Quantitative Results	36
VI.	CONCLUSIONS AND RECOMMENDATIONS	38
BIBLIOGRAPHY		40
APPENDIX		42
	Sample Calculations	43
	Explanation of Tables IV-VI	50
NOMENCLATURE		54
APPROVAL		56

LIST OF TABLES

TABLE		PAGE
I.	Original and Calculated Data - Calibration with Weights	22
II.	Original Data for Resin Bed	25
III.	Data for Figure 5 - Calibration Curve	30
IV.	Rotameter Calibration	51
V.	Manometer Calibrations	52
VI.	Evaluation of the Term $\frac{1 - e^{-\frac{4fL}{D}}}{f}$	53

LIST OF FIGURES

FIGURE		PAGE
1.	Schematic Diagram of the Experimental System	12
2.	Details of Upper Column Assembly	13
3.	Resin Bed Supporting Screen Assembly	14
4.	Typical Channel Development in Resin Bed	31
5.	Plot of Calculated Average Weight Minus Actual Weight Versus Actual Weight	32
6.	$\frac{1 - e^{-\frac{4fL}{D}}}{f}$ vs. f	49

CHAPTER I

INTRODUCTION

General Theory

The pressure relationships within a stationary resin bed in a column under the influence of a moving liquid are relatively unexplored. The problem of discovering the frictional losses between a resin bed and its column wall has been created due to difficulties encountered during the operation of a continuous ion exchange resin column.

Two references[1,2] were found concerning the pressure distributions within dry granulated powders. An interesting illustration of the fact that a downward force applied to the top of a column of sand is not transmitted to the bottom if the column is more than a few diameters in height was found in the second reference. In this particular experiment a piece of cigarette paper was lightly tied around the bottom of the tube. The tube was then loaded with several pounds of sand, and a piston loaded with a large weight was placed on

---

[1] R. S. Spencer, G. D. Gilmore, and R. M. Wiley, "Behavior of Granulated Polymers under Pressure," Journal of Applied Physics, Vol. 21 (1950), pp. 527-531.

[2] J. H. Shaxby, and J. C. Evans, "The Variation of Pressure with Depth in Columns of Powders," Transactions of the Faraday Society, Vol. 19 (1923), pp. 60-72.

top of the sand column. The weight of the sand and loaded piston were so largely supported by the walls of the column that the cigarette paper remained unbroken and was actually supporting the weight of only a shallow layer of sand. It was also pointed out in this article that the force relationships within the sand could be treated mathematically on the assumption that the sand behaved to some extent like a liquid with a definite coefficient of friction existing at the container wall.

In deriving a mathematical expression for the force relationships within a dry powder in a column it was necessary to make two assumptions. It was assumed that the vertical pressure on the powder was uniform across a horizontal cross section, and that the frictional force per unit area at the inner surface column wall was given by the product of a coefficient of friction and the horizontal pressure exerted by the powder. In making this second assumption, no allowance was made for any particle movement within the powder which would introduce another frictional effect.

Theoretical Equations

The following diagram helps to explain the force relationships encountered within a resin bed and a column under the influence of a moving liquid.

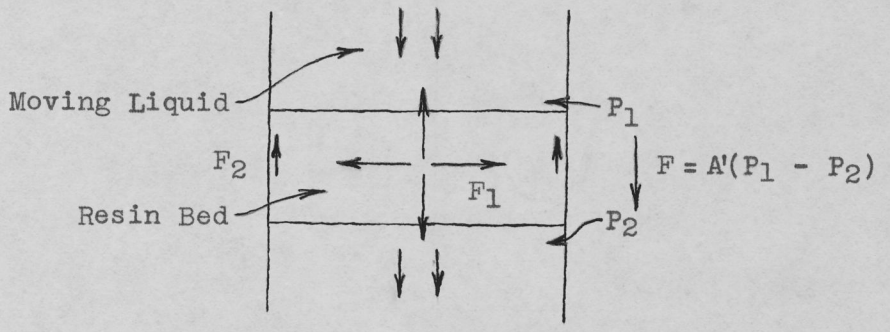

where F_2 = vertical friction force exerted to the column by the resin, lbs. f.

F_1 = force exerted equally in all directions by the resin, lbs. f.

P_1 = absolute pressure exerted by water above resin bed, lbs. f/sq. in.

P_2 = absolute pressure exerted by water below resin bed, lbs. f/sq. in.

A' = cross sectional area of column, sq. in.

F = force which is dissipated to the resin and column wall by the liquid, lbs. f.

The following equation shows the summation of all the vertical forces within the column:

$$F = F_1 + F_2 \qquad (1)$$

By making the same assumptions that have been made in deriving a mathematical expression for the force relationships within a dry powder, the following differential equation was postulated which applies directly to equation (1):

$$-\pi/4\ D^2 dP_L = \pi/4\ D^2 dP_R + \pi\ DdLfP_R \qquad (2)$$

where D = diameter of the column, in.

dP_L = differential pressure drop in the moving liquid, lbs. f/sq. in.

dP_R = differential pressure dissipated to the resin bed, lbs. f/sq. in.

dL = differential length of resin bed, in.

f = coefficient of friction between the resin bed and column wall

The correlation between equation (1) and equation (2) is shown in the following three equations:

$$F = -\pi/4\ D^2 \int dP_L \qquad (3)$$

$$F_1 = \pi/4\ D^2 \int dP_R \qquad (4)$$

$$F_2 = \pi\ D \int dLfP_R \qquad (5)$$

The minus sign in equation (3) is required in order to compensate for the pressure drop, dP_L, which is a negative quantity.

Equation (2) may be rearranged into the following form:

$$\frac{dP_R}{dL} + \frac{4f}{D} P_R = -\frac{dP_L}{dL} \qquad (6)$$

In order to integrate equation (6) the term (dP_L/dL) was assumed to be a constant for a particular flow rate. After integrating equation (6) across the length of the resin bed, the following equation was derived:

$$P_R e^{\frac{4fL}{D}} = - \frac{dP_L}{dL} \left(\frac{D}{4f} \right) \left(e^{\frac{4fL}{D}} - 1 \right) \qquad (7)$$

Present Work

In order to determine the validity of equation (2), an apparatus was designed whereby the coefficient of friction could be calculated from experimental data using this equation. Pressure was exerted on the resin bed by passing water downward through the column. The resin bed was supported in a stationary position by means of a fine mesh screen connected by a rod to a bellows. The bellows was fixed in a metal plate directly above the water feed plate. A dial test indicator was fixed to the top of the bellows so that the deflection of the bellows could be more easily visualized. The bellows and indicator were enclosed so that the bellows could be balanced to some reference position by applying nitrogen gas pressure.

The first problem was to check the equipment to see if force could be measured by means of the bellows apparatus. Several runs were made at varying flow rates with known weights (ranging from a quarter of a pound to a pound and a half)

attached to the screen. An average of the calculated weights was found and the difference between the calculated average and the actual effective weight was determined. For all the weights used, the average calculated weight was greater than the actual effective weight.

The next step was to obtain the experimental data necessary for calculating the coefficient of friction. P_R, the differential pressure dissipated to the resin bed, was determined by observing the difference in pressure between the nitrogen pushing downward on the top of the bellows and the water pushing upward on the bottom of the bellows. This pressure difference was measured with a mercury manometer which shall be referred to hereafter as manometer III. The manometer readings were converted to pressure differences in pounds per square inch by the following equation:

$$P_3 - P_4 = \rho_{N_2}(m)\frac{g}{g_c} + \rho_{Hg}(R)\frac{g}{g_c} - \rho_{H_2O}(m+R)\frac{g}{g_c} \qquad (8)$$

where $P_3 - P_4$ = difference in nitrogen and water pressure across bellows, lbs. f/sq. in.

ρ_{N_2} = density of nitrogen, lbs. m/sq. in.

m = height of nitrogen in manometer above mercury, inches

$\frac{g}{g_c}$ = unity factor, $\frac{(\text{lbs. f})(\text{ft.})(\text{sq. sec})}{(\text{sq. sec})(\text{lbs. m})(\text{ft.})}$

ρ_{Hg} = density of mercury, lbs. m/cu. in.

R = manometer reading - difference in height of mercury, inches

ρ_{H_2O} = density of water, lbs. m/cu. in.

The forces acting on the bellows may be represented by the following equation:

$$F' + P_4A = P_3A \qquad (9)$$

where F' = force exerted downward on bellows by the rod attached to screen, lbs. f

P_4 = pressure acting downward on bellows due to nitrogen pressure, lbs. f/sq. in.

P_3 = pressure acting upward on bellows due to water pressure, lbs. f/sq. in.

A = area of bellows, sq. in.

After finding force F' by knowing $P_3 - P_4$ and A in equation (9), the actual force exerted on the resin bed from the water was found by subtracting the three following quantities from F': the effective weight of the resin, the apparent weight of the screen, and a calibration correction factor taken from a calibration curve plotted from data discussed in Chapter IV. The effective weight of the resin bed in water was calculated using wet resin densities measurements obtained from N. T. Anderson. The density used for the wet resin was 1.32 grams m/cc. The apparent weight of the rod and screen was found by

taking no load measurements on manometer III with the bellows balanced at the reference point. The actual force exerted on the resin bed by the moving liquid was then divided by the area of the column to determine a value for P_R.

Since the term (dP_L/dL) was assumed to be a constant for a given flow rate, a ΔP_L and ΔL were substituted for the differential quantities. The term ΔL was merely the length of the resin bed and was measured by means of a scale. The ΔP_L, or pressure drop in the water across the resin bed, was measured by a red oil (specific gravity = 2.95) manometer which shall be referred to hereafter as manometer II. The manometer readings were converted to pressure differences in pounds per square inch by an equation similar to equation (8).

Having determined P_R and ΔP_L and knowing L and D, these values could then be substituted into equation (7) and the coefficient of friction, f, calculated by a trial and error solution. These trial and error calculations were made by rearranging equation (7) into the following form:

$$\frac{4\ P_R(\Delta L)}{D(\Delta P_L)} = \frac{1 - e^{\frac{-4fL}{D}}}{f} \qquad (10)$$

By using Tables of the Exponential Function e^x published by the National Bureau of Standards, the right side of equation (10) was determined for various values of F from 0.00 to 0.70 at resin bed lengths of 1.00, 1.25, 1.50, 1.75, and 2.00 inches.

This quantity was then plotted versus the values used for the coefficients of friction. It may be noted that since the diameter of the column, D, was equal to four inches, the value for the right side of the equation (10) approached the value of the resin bed length, L, as f approached zero. The left side of equation (10) was determined using experimental data. For a particular bed length, the corresponding value for f was then read from the plot.

The absolute pressure within the column was measured on a mercury manometer which shall be referred to hereafter as manometer I. One side of this manometer was open to the atmosphere and the other side was connected to the column. The manometer readings were converted to pressure differences by an equation similar to equation (8). Runs were made with gauge pressures in the column varying from 2.7 to 6.5 lbs. f /sq. in.

Results

The plot of the difference between the calculated average and actual effective weight was approximately linear. It was observed that the calculated weight values vary considerably from the average. This was particularly true for the weights less than one pound.

Two methods were used while making runs to take readings. On one set of runs the side of the column was tapped with the

handle of a screwdriver, and on the other set of runs the resin bed was allowed to settle freely. During the runs when no tapping of the column was used, it was necessary to disassemble the column frequently and remove the resin, because fine resin particles kept getting in between the column wall and the sleeve of the screen. Tapping the column allowed the screen to slip freely despite the fine particles between the column wall and the screen sleeve. On several runs the resin bed was fluidized with a back flow rate, but this only seemed to break up the larger particles and allow more fine particles to settle around the screen.

It was found that the pressure in the column had no effect on the results obtained so long as the water pressure was great enough to offset the downward force on the bellows by the screen and resin. All of the runs produced coefficients of friction which were indeterminate, so therefore no correlation could be made between the coefficients of friction, water flow rates, and resin bed lengths as was originally planned. It was believed that the continuous slight motion of the individual resin particles was enough to disrupt the assumption of a stationary resin bed which was used in formulating the differential equation (2).

CHAPTER II

EQUIPMENT

A schematic diagram of the system used in the experimental procedure is given in Figure 1. Detailed drawings of the main column and the upper column assembly are given in Figures 2 and 3. The description of the system given below refers to Figure 1 unless otherwise indicated. All numerals refer to valves.

(N) Nitrogen cylinder to supply nitrogen pressure to the upper column assembly.

(1) Nitrogen pressure regulating valve to control the nitrogen pressure to the upper column assembly.

(2) Needle valve to control flow rate down through the column.

(3) Globe valve to allow flow up through the column to fluidize the resin bed.

(4) Globe valve to allow draining of column.

(5) Gate valve to close feed line to pump.

(6) Globe valve to regulate water pressure within the main column.

(7) Gate valve through which resin may be added to the main column.

(8) Valve to bleed off air trapped in the main column.

(9) Valve to bleed off nitrogen pressure to obtain more accurate pressure control.

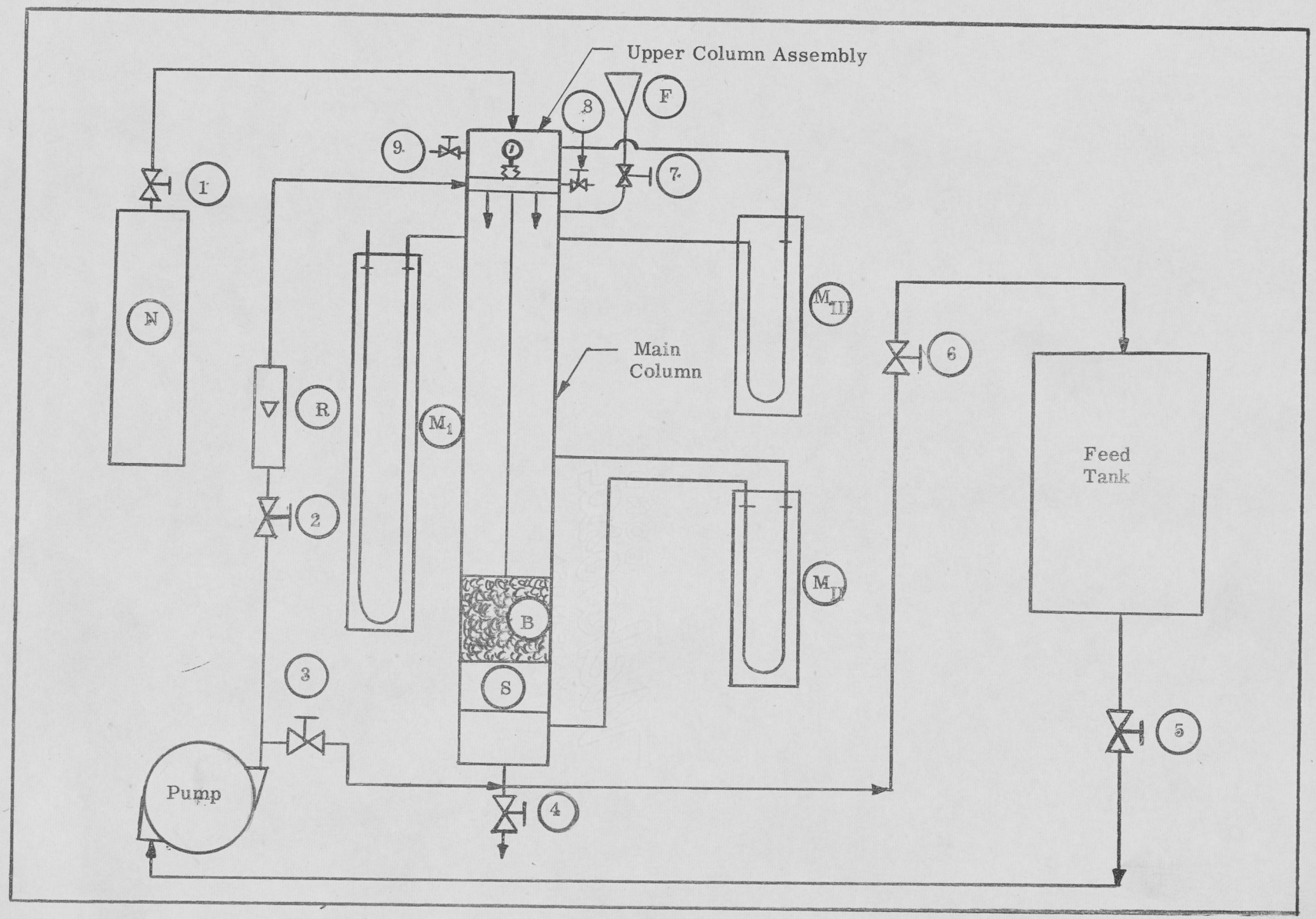

FIGURE 1. SCHEMATIC DIAGRAM OF THE EXPERIMENTAL SYSTEM

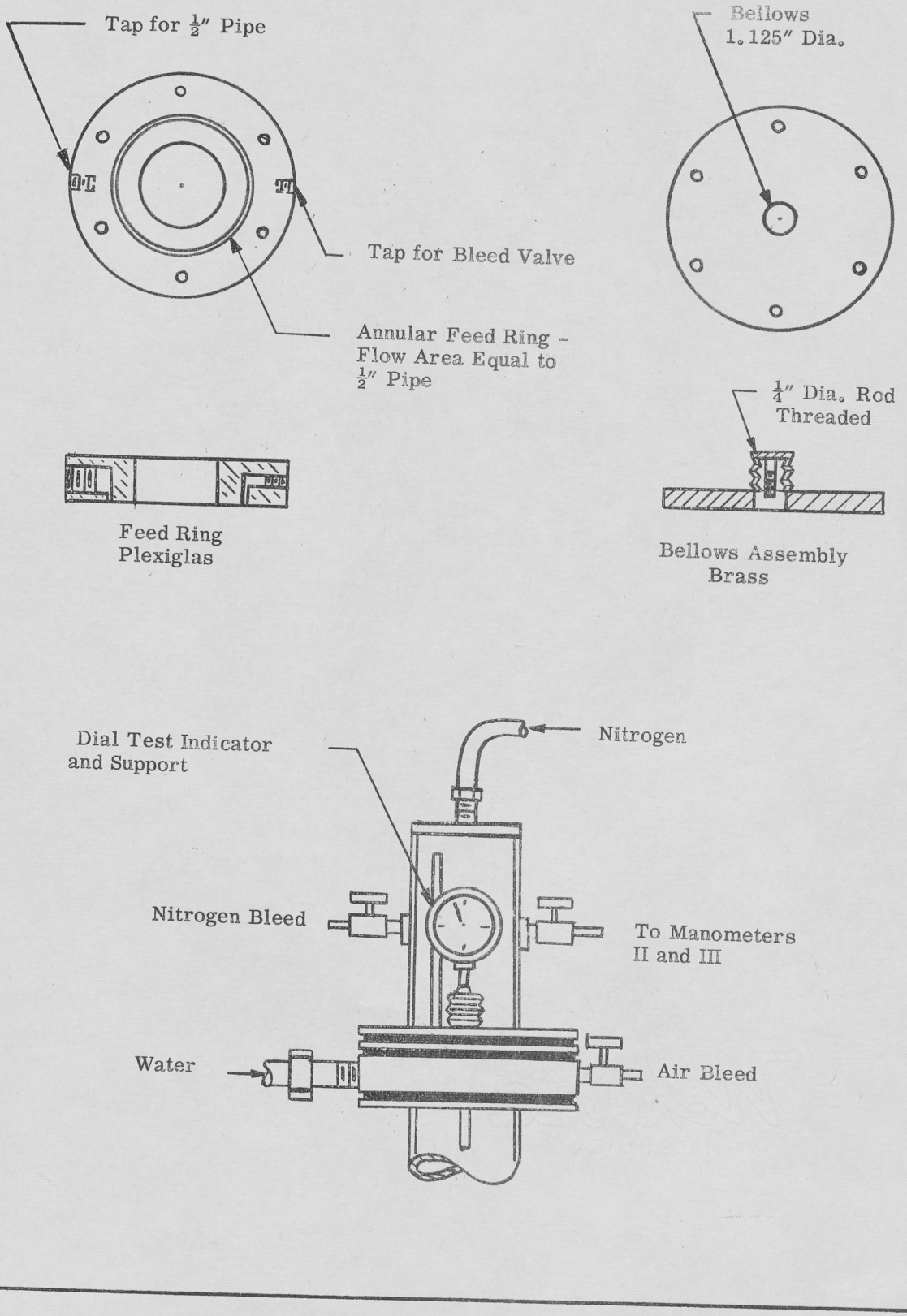

FIGURE 2. DETAILS OF UPPER COLUMN ASSEMBLY

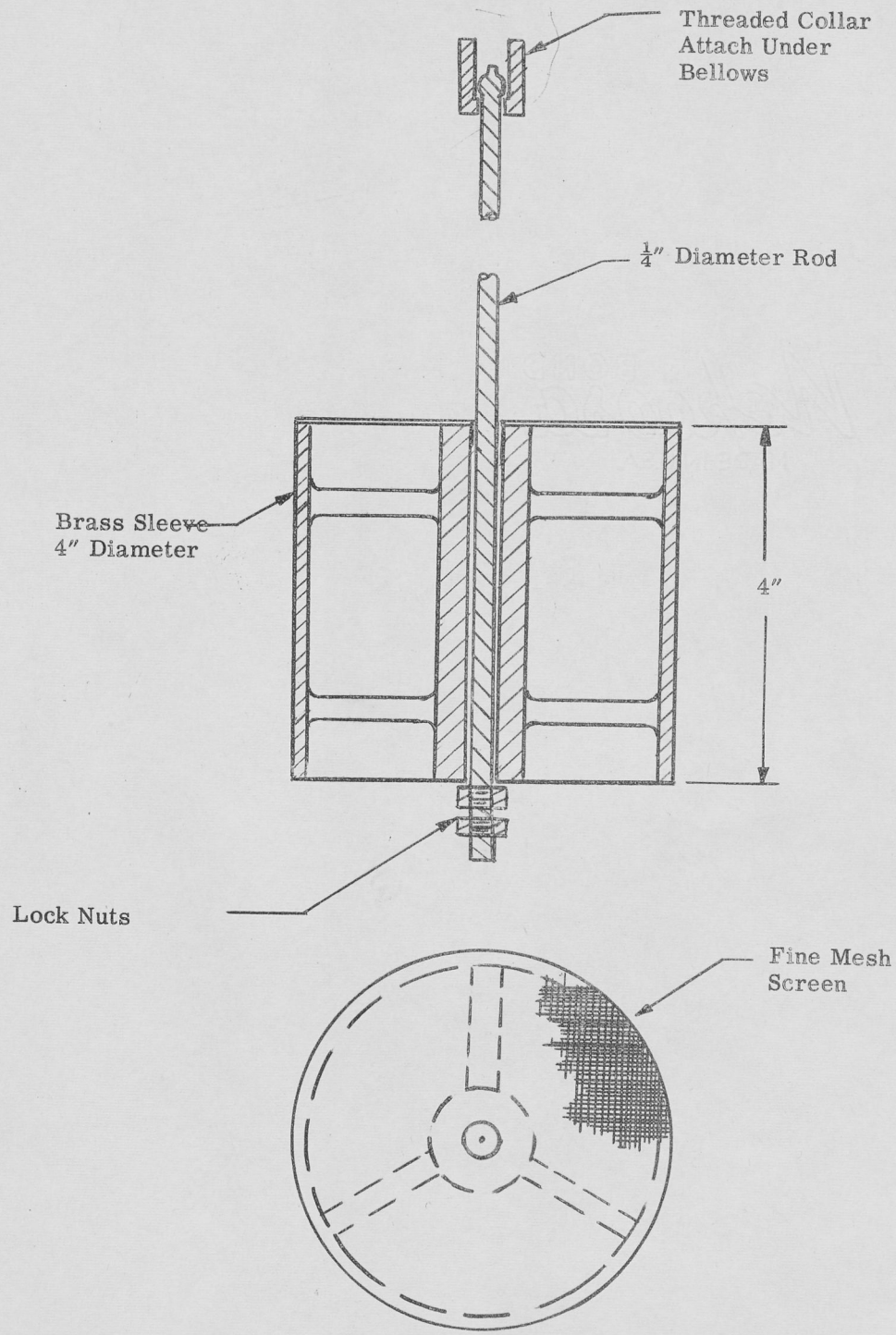

FIGURE 3. RESIN BED SUPPORTING SCREEN ASSEMBLY

(S) Screen and screen guide assembly. See Figure 3 for detail drawing.

(B) Resin Bed. Dowex 50, screened to .0328-.0390 particle diameter.

(F) Funnel for adding resin to the main column.

(R) Rotometer to measure flow down through the main column.

Manometers:

(M_I) 138 cm. manometer used to measure the internal pressure within the main column. Mercury is used as the manometer liquid.

(M_{II}) 88 cm. manometer used to measure the pressure drop across the resin bed and screen, ΔP_L. Merrian Red Oil, specific gravity of 2.95, is used as the manometer liquid.

(M_{III}) 88 cm. manometer used to measure the pressure drop across the bellows, ΔP_R. Mercury is used as the manometer liquid.

CHAPTER III

PROCEDURE

Since this thesis has been undertaken to supply a basis for further study of the pressure-frictional force relationships of resin beds in ion exchange columns, this section on procedure will deviate somewhat from the established form. It is believed that a more extended discussion of the procedure used, the difficulties encountered and some of the conclusions reached will be of considerable value to anyone continuing this work. Therefore this section will be written to serve as a guide, in so much as possible, for future work, as well as a resume of the actual work done on the thesis project.

The procedure involved in the operation of the column centers about the force relationships, as described previously in the section devoted to theory. Considering these relationships briefly, it can be seen that the operation of the column depends upon the balancing of hydrostatic pressure within the column by a nitrogen pressure in the upper column section. The bellows and dial test indicator have been employed to give a reference point. Since all upward force acting on the bellows is obtained from the hydrostatic pressure within the column, certain minimum pressures within the column must be maintained. It has been found that pressures less than 20 cm. Hg on manometer I cannot provide the necessary upward force to

balance the bellows under loaded column conditions above one inch of resin bed.

An upper column pressure of 40 cm. Hg on manometer I was set. Although greater pressures could be used, considerable difficulty was encountered in maintaining controlled conditions, and consequently the accuracy of the resulting measurements were quite doubtful. Also the high pressures required to maintain control at bed lengths greater than 2 inches caused leakage about the joint between the upper and lower columns. Therefore operation was restricted to the region from 20 cm. to 40 cm. ΔP, measured on manometer I (2.75 psig to 6.50 psig).

The actual experimental procedure involved several preliminary calibrations. The rotameter was calibrated and found to have good linear characteristics. The reference point of the bellows was set as the zero point between the major divisions four and five. This was given the symbol 4/5, which will be used as such hereafter in this thesis.

Once the preliminary calibrations had been completed, runs were made with the column under varying pressures and load conditions. Considerable time was taken before a "feel" for the method of operation could be attained and the approximate range of operating conditions determined. The final method of operation was as described below:

A series of runs was made with only the empty column with the screen attached to determine the drag introduced by

the screen. Pressures of 20 cm., 30 cm., and 40 cm. Hg on manometer I were used. Flow rates were varied from 20 to 100 scale divisions on the rotameter. Manometers II and III were read and recorded for a dial reading of 4/5. After the empty column runs were made, resin was added through the funnel, F (See Figure 1). Resin was added in 1/4 inch layers. A typical run is described below, assuming the column is not filled with water.

Valves (2) and (6) are closed. Valve (7) is opened to prevent excess pressure from building up in the column. The air vent (8) is opened. Valve (3) is opened and the pump turned on. Water is introduced from the bottom of the column, forcing the air upward and out the vent. During this operation care must be taken to keep the bellows balanced so that it is not overly deflected. Once the column is filled, valve (3) is closed, and valve (2) is opened, causing flow from the top of the column. Valves (2) and (6) are adjusted to obtain the desired flow rate and column pressure. The bellows is kept balanced during this operation by controlling the nitrogen pressure in the top of the column. This is done with the nitrogen valve, (1), and the bleed off valve, (9). It is extremely important to keep the dial reference at 4/5 when readings are taken. At bed lengths approaching 2 inches the slightest deflection from the absolute 0 reading can affect the manometer reading greatly. Using a two inch bed, a change

in the manometer III reading of 10 cm. would cause no indicator deflection.

When the indicator has been balanced, all three manometers and the rotameter are read and recorded. It is imperative that there be no air in the water lines to the manometers. These lines must constantly be checked and cleared of air.

After a set of runs has been made for a particular depth of bed, more resin is added. Resin can best be added by placing the desired amount in the funnel, F. Valve (4) is opened at the bottom of the column and the funnel valve (7) is opened. If water is added to the funnel, keeping it full, no change in the liquid level will occur within the column. Of course this operation must be performed with no pressure within the column.

After several runs have been made, resin particles will begin to slip down between the screen guide and the column wall, causing binding. This binding will cause the dial indicator needle to move in a series of jerks. As soon as the free movement of the indicator needle is impaired it is necessary to shut down and take the column apart to clean it. The upper column assembly is unbolted from the main column and removed. The dial test indicator system is removed by unscrewing it from the rod supporting the resin screen. The water feed ring coupling is unscrewed and the ring is removed. Then the resin screen is lifted out of the column and cleaned.

The column walls are washed down and the clean screen replaced and the column can be put into operation following the procedure already outlined.

CHAPTER IV

DATA

Original and calculated data are given in Tables I-III. Table I gives original and calculated data for the calibration of the bellows system using known weights. Flow rates are given by the manometer readings found in column (1). The pressure drops across the bellows, and across the resin bed are given in columns (3) and (4). Column (2) gives the hydraulic pressure within the column. The actual weight applied to the system is given in column (5). This weight is the final weight added after a correction for buoyancy. The calculated weight, obtained from the pressure drop across the bellows is given in column (6).

Table II gives the original data for the column loaded with a resin bed. Column (1) gives the depth of resin bed for a particular run. Flow rates are given by the rotameter readings in column (2). Column hydrostatic pressures, pressure drops across the bed, and pressure drops across the bellows are given in columns (3), (4), and (5), respectively.

No data could be taken for bed lengths less than 1.00 inch because of channeling effects. A typical example of channeling is given in Figure 4.

The data for the calibration curve given in Figure 5 is taken from Table III. The actual weight is given in column

TABLE I

ORIGINAL AND CALCULATED DATA - CALIBRATION WITH WEIGHTS

Rotameter Reading (1)	Man. I Δ cm. Hg (2)	Man. II Δ cm. Red Oil (3)	Man. III Δ cm. Hg (4)	Actual Weight lbm. (5)	Calculated Weight lbm. (6)
50	40	0	4.6	No Load	0.238
31	40	0	6.5	0.190	0.348
53	40	0	6.5	0.190	0.348
67	40	0	6.5	0.190	0.348
88	40	0	6.6	0.190	0.368
31	40	0	6.7	0.190	0.388
51	40	0	6.8	0.190	0.398
70	40	0	7.0	0.190	0.437
88	40	0	7.0	0.190	0.437
33	40	0	6.8	0.190	0.398
50	40	0	7.0	0.190	0.437
71	40	0	7.2	0.190	0.476
90	40	0	7.0	0.190	0.437
30	11.3	0	7.4	0.318	0.517
40	11.3	0	7.4	0.318	0.477
50	11.3	0	7.1	0.318	0.467
60	11.3	0	7.0	0.318	0.447
70	11.3	0	7.3	0.318	0.497
80	11.3	0	7.0	0.318	0.447
90	11.3	0	7.8	0.318	0.596
100	11.3	0	7.9	0.318	0.606
30	11.3	0	7.7	0.318	0.576
40	11.3	0	7.7	0.318	0.576
50	11.3	0	7.7	0.318	0.576
60	11.3	0	7.9	0.318	0.606
70	11.3	0	7.6	0.318	0.556
80	11.3	0	7.9	0.318	0.606
90	11.3	0	7.9	0.318	0.606
100	11.3	0	7.7	0.318	0.576
33	40	0	7.3	0.318	0.497
51	40	0	7.4	0.318	0.517
74	40	0	7.2	0.318	0.477
91	40	0	7.4	0.318	0.517

TABLE I (continued)

ORIGINAL AND CALCULATED DATA - CALIBRATION WITH WEIGHTS

Rotameter Reading (1)	Man. I Δ cm. Hg (2)	Man. II Δ cm. Red Oil (3)	Man. III Δ cm. Hg (4)	Actual Weight lbm. (5)	Calculated Weight lbm. (6)
33	40	0	7.4	0.318	0.517
54	40	0	7.4	0.318	0.517
70	40	0	7.6	0.318	0.556
91	40	0	7.4	0.318	0.517
30	40	0	9.2	0.466	0.845
49	40	0	9.4	0.466	0.885
72	40	0	9.2	0.466	0.845
89	40	0	9.0	0.466	0.815
31	40	0	9.4	0.466	0.885
49	40	0	9.4	0.466	0.885
73	40	0	9.6	0.466	0.915
89	40	0	9.4	0.466	0.885
34	30	0	9.4	0.466	0.885
49	30	0	9.4	0.466	0.885
71	30	0	9.6	0.466	0.915
89	30	0	9.4	0.466	0.885
20	11.3	0	11.4	0.632	1.25
30	11.3	0	11.4	0.632	1.25
40	11.3	0	11.4	0.632	1.25
50	11.3	0	11.5	0.632	1.27
60	11.3	0	11.3	0.632	1.23
70	11.3	0	11.3	0.632	1.23
80	11.3	0	11.3	0.632	1.23
90	11.3	0	11.4	0.632	1.25
100	11.3	0	11.5	0.632	1.27
32	40	0	11.1	0.632	1.20
50	40	0	11.2	0.632	1.21
70	40	0	11.3	0.632	1.23
91	40	0	11.1	0.632	1.20
32	40	0	11.3	0.632	1.21
49	40	0	11.3	0.632	1.21
74	40	0	11.5	0.632	1.27
93	40	0	11.3	0.632	1.21

TABLE I (continued)

ORIGINAL AND CALCULATED DATA - CALIBRATION WITH WEIGHTS

Rotameter Reading (1)	Man. I Δ cm. Hg (2)	Man. II Δ cm. Red Oil (3)	Man. III Δ cm. Hg (4)	Actual Weight lbm. (5)	Calculated Weight lbm. (6)
33	40	0	12.7	0.822	1.50
51	40	0	12.9	0.822	1.53
73	40	0	13.0	0.822	1.55
90	40	0	13.0	0.822	1.55
31	40	0	13.2	0.822	1.59
51	40	0	13.1	0.822	1.57
74	40	0	13.2	0.822	1.59
91	40	0	13.2	0.822	1.59
32	40	0	13.2	0.822	1.59
50	40	0	13.2	0.822	1.59
75	40	0	13.2	0.822	1.59
90	40	0	13.4	0.822	1.62
90	14.3	0	14.3	0.950	1.79
100	14.3	0	14.3	0.950	1.79

TABLE II

ORIGINAL DATA FOR RESIN BED

Set No.	Bed Length in. (1)	Rotameter Reading (2)	Man. I Δ cm. Hg (3)	Man. II Δ cm. Red Oil (4)	Man. III Δ cm. Hg (5)
			Free Bed		
No Load	0	46	50	0	4.4
I	1.00	32	40	1.55	9.9
	1.00	51	40	2.40	13.2
	1.00	71	40	3.75	18.7
	1.00	88	40	4.90	21.5
II	1.00	30	40	1.40	8.7
	1.00	54	40	2.70	13.6
	1.00	71	40	3.60	18.9
	1.00	89	40	4.85	20.4
No Load	0	48	40	0	4.6
III	1.00	31	40	1.75	10.7
	1.00	53	40	3.00	14.6
	1.00	70	40	4.30	20.0
	1.00	93	40	6.00	26.2
IV	1.00	30	40	1.70	10.3
	1.00	53	40	3.15	18.7
	1.00	72	40	4.50	21.1
	1.00	91	40	6.05	26.8
V	1.00	32	40	1.85	10.9
	1.00	52	40	3.10	16.7
	1.00	76	40	4.85	19.3
	1.00	92	40	6.15	22.7
No Load	0	50	40	0	3.8
VI	1.25	32	30	1.80	10.3
	1.25	51	30	2.95	13.8
	1.25	70	30	4.30	19.9
	1.25	88	30	5.75	23.7
No Load	0	53	30	0	3.4
VII	1.25	34	30	1.80	10.3
	1.25	51	30	2.70	13.5
	1.25	74	30	4.50	17.4
	1.25	96	30	6.10	21.6
VIII	1.25	32	30	1.80	10.5
	1.25	51	30	2.75	13.8

TABLE II (continued)

ORIGINAL DATA FOR RESIN BED

Set No.	Bed Length in. (1)	Rotameter Reading (2)	Man. I Δ cm. Hg (3)	Man. II Δ cm. Red Oil (4)	Man. III Δ cm. Hg (5)
	1.25	70	30	4.10	17.8
	1.25	90	30	5.55	22.0
No Load	0	50	30	0	3.7
IX	1.25	33	30	1.75	10.5
	1.25	51	30	2.80	13.7
	1.25	71	30	4.25	17.7
	1.25	92	30	5.90	22.0
X	1.25	31	30	1.65	10.3
	1.25	53	30	2.85	13.6
	1.25	68	30	4.05	17.3
	1.25	87	30	5.45	21.6
No Load	0	50	30	0	3.7
XI	1.50	34	30	2.35	12.7
	1.50	51	30	3.50	15.8
	1.50	72	30	5.40	20.2
	1.50	89	30	7.25	23.6
No Load	0	50	30	0	3.7
XII	1.50	33	30	2.55	12.4
	1.50	50	30	3.85	15.6
	1.50	72	30	6.00	23.1
	1.50	84	30	7.45	24.6
XIII	1.50	31	30	2.50	11.9
	1.50	51	30	4.00	15.9
	1.50	69	30	5.70	20.1
	1.50	86	30	7.55	27.0
XIV	1.50	30	40	2.35	12.2
	1.50	52	40	4.10	16.0
	1.50	72	40	6.00	19.6
	1.50	87	40	7.65	23.6
XV	1.50	31	40	2.55	11.8
	1.50	53	40	4.20	16.5
	1.50	71	40	5.95	20.0
	1.50	88	40	7.70	26.7
No Load	0	50	30	0	4.6
XVI	1.75	27	40	2.90	14.2
	1.75	47	50	5.25	19.5

TABLE II (continued)

ORIGINAL DATA FOR RESIN BED

Set No.	Bed Length in. (1)	Rotameter Reading (2)	Man. I Δ cm. Hg (3)	Man. II Δ cm. Red Oil (4)	Man. III Δ cm. Hg (5)
	1.75	72	50	8.55	30.7
	1.75	83	50	10.05	35.1
XVII	1.75	32	40	3.45	15.0
	1.75	50	50	5.60	23.4
	1.75	68	50	8.05	31.5
	1.75	88	50	10.95	40.7
XVIII	1.75	32	50	3.50	15.6
	1.75	53	50	6.00	18.8
	1.75	69	50	8.25	26.8
	1.75	83	50	10.15	33.3
No Load	0	50	30	0	3.7
XIX	2.00	33	50	3.75	16.4
	2.00	53	50	6.10	19.4
		Tapped Bed			
No Load	0	49	30	0	4.1
I	1.00	32	20	2.10	11.3
	1.00	43	20	2.90	16.1
	1.00	53	20	3.70	19.2
II	1.00	29	30	1.75	10.9
	1.00	42	30	2.65	17.4
	1.00	50	30	3.30	16.6
	1.00	60	30	4.10	18.5
	1.00	74	30	5.35	22.7
	1.00	85	30	6.55	29.0
III	1.00	28	40	1.95	24.9
	1.00	42	40	2.85	20.4
	1.00	52	40	3.80	18.8
	1.00	62	40	4.60	21.3
	1.00	77	40	5.95	25.6
	1.00	91	40	7.05	27.2
IV	1.25	29	20	2.05	15.4
	1.25	40	20	3.00	16.6
	1.25	52	20	4.10	20.0

TABLE II (continued)

ORIGINAL DATA FOR RESIN BED

Set No.	Bed Length in. (1)	Rotameter Reading (2)	Man. I Δ cm. Hg (3)	Man. II Δ cm. Red Oil (4)	Man. III Δ cm. Hg (5)
V	1.25	32	30	2.50	14.9
	1.25	43	30	3.60	17.5
	1.25	55	30	4.70	20.8
	1.25	67	30	5.90	24.6
	1.25	79	30	7.15	27.7
	1.25	90	30	8.55	30.2
VI	1.25	30	40	2.70	15.3
	1.25	41	40	3.60	18.8
	1.25	52	40	4.55	21.3
	1.25	63	40	5.65	24.3
	1.25	75	40	6.90	28.5
	1.25	86	40	8.30	30.2
VII	1.50	29	20	1.80	9.5
	1.50	39	20	2.40	13.6
	1.50	47	20	2.95	14.1
	1.50	54	20	3.55	14.8
	1.50	67	20	4.55	18.2
VIII	1.50	34	30	2.20	11.7
	1.50	44	30	2.80	13.8
	1.50	56	30	3.75	15.5
	1.50	65	30	4.50	18.4
	1.50	77	30	5.30	22.0
IX	1.50	26	40	1.70	8.9
	1.50	42	40	2.70	11.9
	1.50	54	40	3.60	20.1
	1.50	68	40	4.20	19.5
	1.50	80	40	5.65	23.1
	1.50	92	40	6.85	25.1
X	1.75	33	30	2.90	16.5
	1.75	42	30	3.95	17.3
	1.75	55	30	5.20	22.0
	1.75	69	30	6.75	24.1
XI	1.75	31	40	2.90	14.0
	1.75	39	40	3.75	19.1
	1.75	49	40	4.70	20.8
	1.75	64	40	6.30	26.4
	1.75	76	40	7.75	27.3
	1.75	87	40	9.45	34.2

TABLE II (continued)

ORIGINAL DATA FOR RESIN BED

Set No.	Bed Length in. (1)	Rotameter Reading (2)	Man. I Δ cm. Hg (3)	Man. II Δ cm. Red Oil (4)	Man. III Δ cm. Hg (5)
XII	2.00	29	30	2.80	15.5
	2.00	40	30	4.05	20.4
	2.00	51	30	5.40	23.5
	2.00	61	30	6.65	24.8
	2.00	69	30	7.80	30.2
XIII	2.00	33	40	3.55	15.5
	2.00	42	40	4.55	19.9
	2.00	53	40	5.80	23.5
	2.00	64	40	7.30	27.7
	2.00	77	40	9.05	33.2
	2.00	82	40	9.90	36.0
	2.00	92	40	11.65	40.8

TABLE III

DATA FOR FIGURE 5 - CALIBRATION CURVE

Actual Weight lbm. (1)	Average of Calculated Weights lbm. (2)	Weights (2) - (1) lbm. (3)
0.190	0.402	0.212
0.318	0.535	0.217
0.466	0.878	0.412
0.632	1.233	0.601
0.822	1.572	0.750
0.950	1.790	0.840

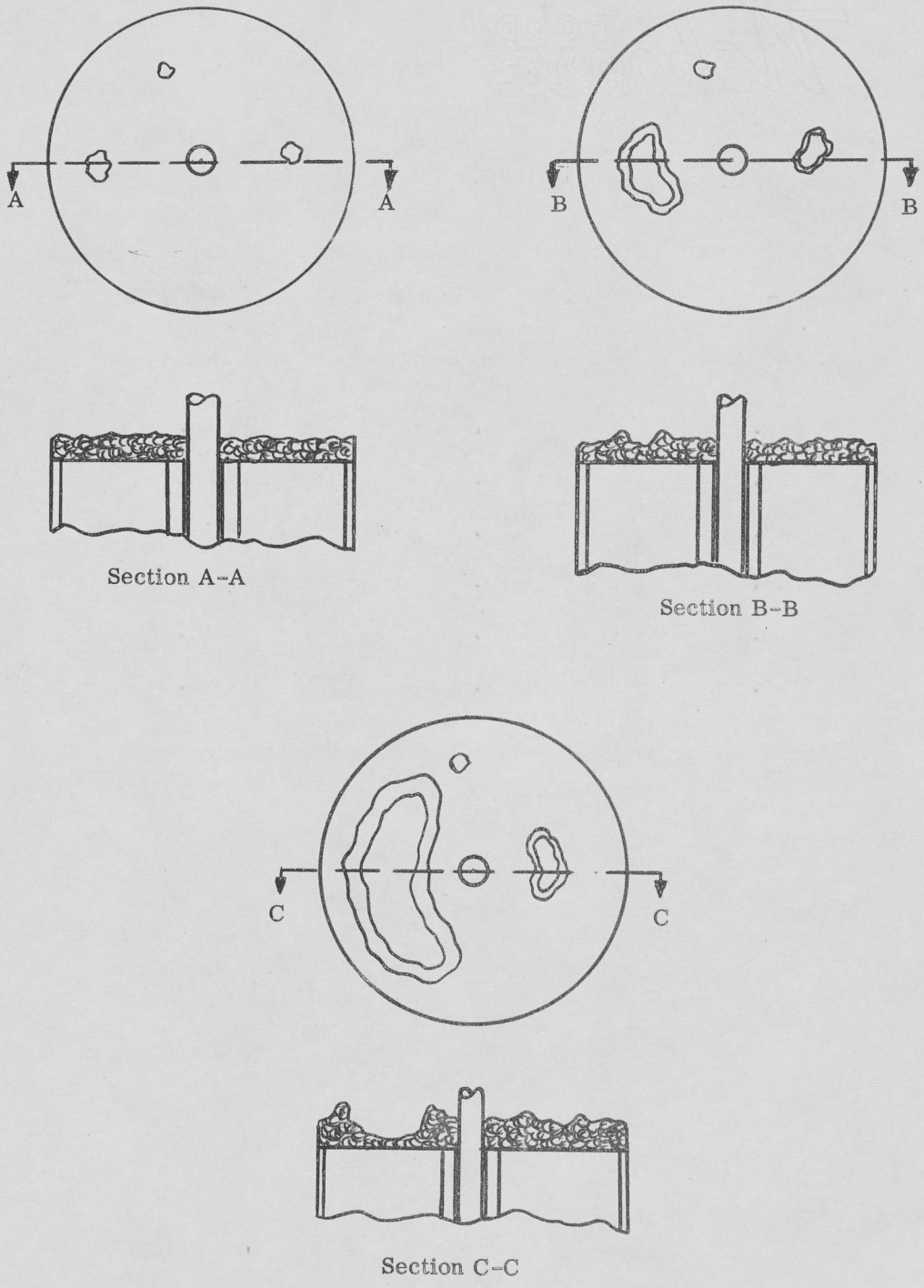

FIGURE 4. TYPICAL CHANNEL DEVELOPMENT IN RESIN BED

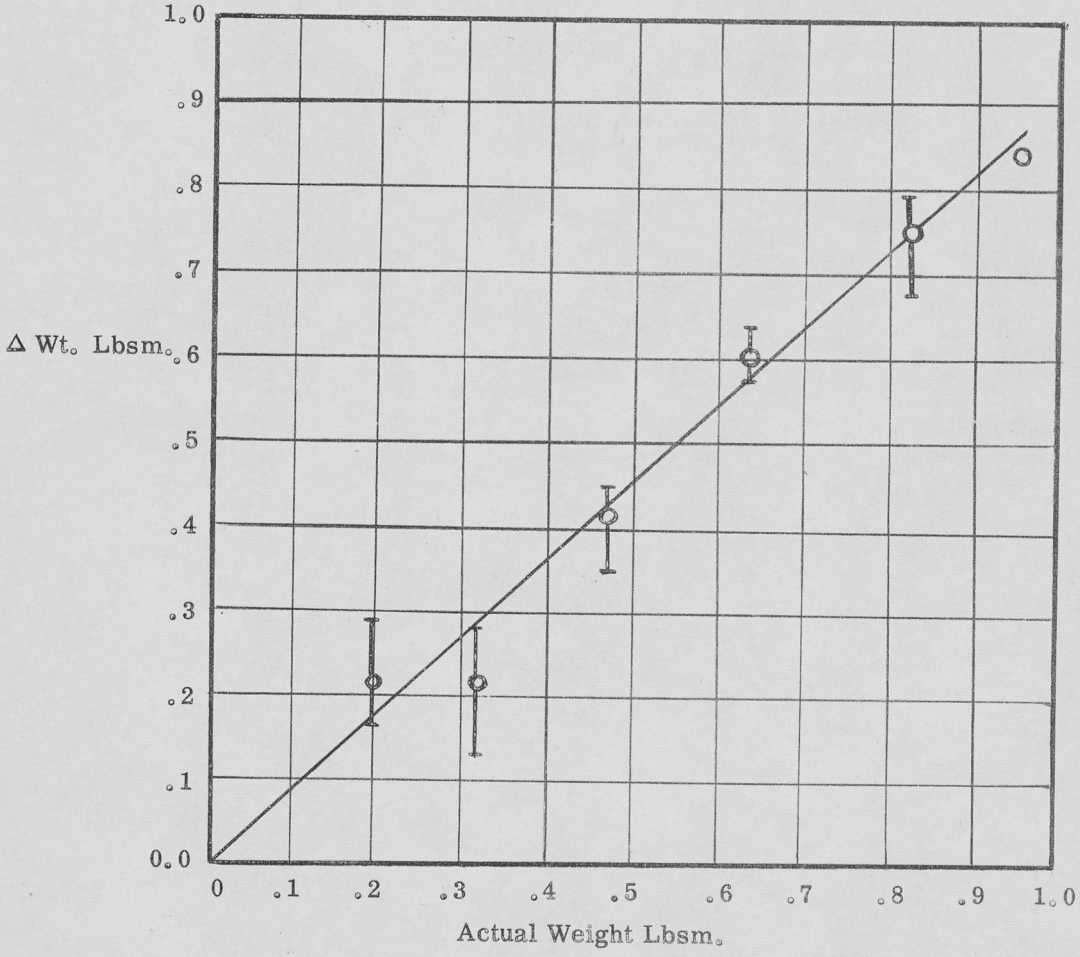

FIGURE 5
PLOT OF CALCULATED AVERAGE WEIGHT
MINUS ACTUAL WEIGHT VERSUS
ACTUAL WEIGHT

(1). The averages of the calculated weights from Table II are given in column (2). Column (3) gives the difference between the actual weight and the calculated weight on the supporting screen.

CHAPTER V

DISCUSSION OF RESULTS

Two classes of results have been derived from the experimental work. The first class involves the particular characteristics and limitations of the experimental system in its present condition. Much of the information falling in this class is based upon qualitative observation. In many cases no quantitative information could be obtained for the phenomena that were observed.

The second class of results consists of those results which have been obtained from quantitative measurements and calculations. These results are rather limited because of the present limitations of the experimental system, but they do form a basis from which further experimental work can be planned.

Qualitative Results

No reproducible data could be obtained for bed lengths of 0.25 in., 0.50 in., and 0.75 in. At these bed lengths a peculiar liquid flow condition was found to exist within the resin bed. As soon as liquid began to flow through the bed "channels" began to develop in the resin bed. These channels began as slight indentations in the bed surface. They grew quite rapidly, maintaining the geometry of growth as shown in

Figure 4. The channels did not seem to follow any particular pattern of growth, nor did they appear at any particular location on the bed surface. The random behavior of the channeling phenomena gave no indication that the liquid flow in the column was unequally distributed and hence was causing the channeling effect. The entirely random nature of the phenomena indicated a particular degree of unstability of the resin bed at bed lengths under 1 inch.

No attempt was made to obtain data for channeled beds since the unequally distributed flow resulting from the channels in the resin bed caused unequally distributed forces within the bed and at the contact surface between the resin and the column wall. Further, these unequally distributed forces varied as the channels changed form.

The channeling effect disappeared at a bed length of 1 inch. Data were taken for bed lengths from 1 inch to 2 inches. At a bed length of 2 inches no data were taken because the bellows and dial indicator system was not sufficiently accurate to be used as a reference point. At this bed length a variation of the dial needle from a position tangent to one side of the zero mark to a similar position on the other side of the mark could result in as much as a 10 cm. variation on manometer III.

A completely unexpected resin particle motion was found to exist for all bed lengths studied. Under all conditions

studied a random motion of the individual resin particles was observed whenever liquid was flowing through the bed. This non-static state of the bed particles seemed to exist throughout the entire bed, from the surface down to the screen. The individual particle movements seemed completely random in direction, but of constant velocity. No deformation of the bed itself was observed.

Quantitative Results

The initial calibration of the bellows system with known weights gave an approximately linear relationship between the calculated average weight and the actual weight used in calibration. This relationship can be seen from the plot of weight and actual weight, given in Figure 5.

It was found that flow rate had no noticeable effect on the weight relationship as described in the preceding paragraph. From Table II it can be seen that the calculated weights seemed to increase over a period of reading, indicating fatigue in the bellows.

The attempted determination of a coefficient of friction for each run produced results which had no physical significance. The calculations for the left side of equation (10), Chapter I, using experimental data gave numbers which were greater than the resin bed length. As was previously stated, the value for the right side of equation (10) approached the

value of the resin bed length as f approached zero, and as f positively increased the value for the right side of equation (10) decreased. A numerical value greater than the bed length for the right side of equation (10) meant that the value of f was indeterminate or was a negative number which would have no physical meaning. The indeterminate values for f were of no value except that they tended to disprove the original differential equation which assumed no frictional losses between the individual resin particles.

CHAPTER VI

CONCLUSIONS AND RECOMMENDATIONS

Several definite conclusions can be drawn from this investigation. The approximately linear calibration of the bellows, as shown in Figure 5, indicates that the bellows-dial test indicator system can be used to determine the force relationships involved. The small bellows used in the present column is quite inaccurate at the higher bed lengths and column pressures. A larger bellows is needed so that balancing can be accomplished at lower differential pressures, resulting in greater accuracy.

The differential equation developed for the system is based on the assumption of equally distributed forces within the resin bed. Since the individual resin particles have been found to be in constant motion, it is doubtful that an equally distributed force system exists within the resin bed. Therefore the differential equation in its present form probably does not completely describe the force system within the column.

In order to obtain data for greater bed lengths several changes in the experimental system are recommended. These recommendations are given below.

Recommendation	Reason
1) Some type of seal needs to be provided between the top of the	1) Resin particles tend to work down between the resin

Recommendation	Reason
resin screen and the column wall.	screen sleeve and the column wall, causing binding.
2) A larger bellows should be used to replace the bellows on the column.	2) A larger bellows will allow balancing with a smaller ΔP across the bellows, giving more accurate readings.
3) A more sensitive nitrogen bleed off valve is needed.	3) It is very difficult to regulate the nitrogen pressure on the bellows at the higher column pressures.
4) The method of fastening the upper column assembly to the main column needs to be redesigned.	4) The present system will not contain column pressures greater than 50 cm. Hg on manometer I without leaking.
5) The resin screen should be affixed to the supporting rod so that it is an integral part, but still has a slight play to eliminate binding.	5) Unless the screen is fixed to the rod, the screen has a tendency to remain fixed while the rod and bellows moves downward.
6) The upper main column pressure tap should be moved several inches down the column.	6) Moving the tap would reduce pressure fluctuations resulting from turbulent flow in the entrance region.
7) Add alternate layers of resin and colored resin in approximately 1/8 in. layers.	7) It would be helpful to know whether the supposed random motion is actually random motion. The colored layers would enable the observer to determine the character of the resin motion. By knowing the nature of the particle motion, it may be possible to modify the differential equation used in this investigation.

BIBLIOGRAPHY

CRANE'S CREST

BIBLIOGRAPHY

1. Badger, W. L., and Banchero, J. S., Introduction to Chemical Engineering, New York, McGraw-Hill Book Company, Inc., (1955).

2. Spencer, R. S., Gilmore, G. D., and Wiley, R. M., "Behavior of Granulated Polymers under Pressure," Journal of Applied Physics, Vol. 21 (1950), pp. 527-531.

3. Tables of the Exponential Function e^x, National Bureau of Standards, (1951), Washington, United States Government Printing Office.

4. Shaxby, J. H., and Evans, J. C., "The Variation of Pressure with Depth in Columns of Powders," Transactions of the Faraday Society, Vol. 19 (1923), pp. 60-72.

APPENDIX

SAMPLE CALCULATIONS

Calibration of Manometer I:

Using equation similar to equation (8):

$$P_5 - P_6 = \rho_{air(m')} \frac{g}{gc} + \rho_{Hg(R)} \frac{g}{gc} - \rho_{H_2O(m'+R)} \frac{g}{gc}$$

where $P_5 - P_6$ = difference in column and atmospheric pressure, lbs. f/sq. in.

ρ_{air} = density of air, lbs. m/cu. in.

m' = height of air in manometer above mercury, inches

$\frac{g}{gc}$ = unity factor, $\frac{(\text{lbs. f})(\text{ft.})(\text{sq. sec,})}{(\text{lbs. m})(\text{ft.})(\text{sq. sec.})}$

ρ_{Hg} = density of mercury, lbs. m/cu. in.

R = manometer reading, difference in height of mercury, inches

ρ_{H_2O} = density of water, lbs. m/cu. in.

The height from the zero position on manometer I to the top was 69 cm.

For a ΔP manometer I reading equal to 30 cm. of mercury (See Table V in Appendix):

m' = 69 cm - 15 cm = 54 cm of air

R = 30 cm of mercury

$m' + R$ = 54 cm 30 cm = 84 cm of water

$$P_5-P_6 = \frac{0.075 \text{ lbs m}}{\text{ft}^3}(54\text{cm})\left(\frac{\text{in}}{2.54\text{cm}}\right)\left(\frac{\text{ft}^3}{1728 \text{ in}^3}\right)\left(\frac{32.2\text{ft}}{\text{sec}^2}\frac{\text{lbs f sec}^2}{32.2 \text{ lbs m ft}}\right)+$$

(similar units)

$$(13.6)(62.4)(30)\ \frac{1}{2.54}\cdot\frac{1}{1728}\cdot\frac{32.2}{32.2} - (62.4)(84)\ \frac{1}{2.54}\cdot\frac{1}{1728}\cdot\frac{32.2}{32.2}$$

$$\frac{\text{lbs f}}{\text{in}^2}$$

$$P_5 - P_6 = (0.0009 + 5.800 - 1.194)\ \text{lbs f/ sq. in.}$$

$$P_5 - P_6 = 4.60\ \text{lbs f/sq. in.}$$

Manometer II and manometer III were calibrated similarly to manometer I (see Table V in Appendix). Manometer II contained red oil (specific gravity = 2.95) and water on both sides, while manometer III contained mercuty with water on one side and nitrogen on the other side. The height from the zero position on manometers II and III to the top was 44 cm.

Calculation of known weights on screen: (See Table I and Figure 5). Density of aluminum = 2.70 grams/cc.

A 137 gram aluminum weight was placed on the screen:

$$(137\ \text{grams})\ \frac{\text{cc}}{2.70\ \text{grams}} = 50.8\ \text{cc of Al}$$

$$(50.8\ \text{cc})\ \frac{1\ \text{gram}}{\text{cc}} = 50.8\ \text{grams of water}$$

Actual effective weight of Al in water:

(weight of Al - buoyancy force of water)

(137 grams) - (50.8 grams) = 86.2 grams

Actual effective weight of Al = $(86.2\ \text{grams})\ \frac{\text{lbs. f}}{454\ \text{grams}} = 0.190$ lbs. f

Original data for run I from Table I:

ΔP (no load) on manometer III = 4.6 cm. of Hg

ΔP (with weight) on manometer III = 6.5 cm. of Hg

Rotameter reading = 31

By interpolating from Table V:

ΔP (no load) = 4.6 cm. of Hg = 0.24 lbs. f/sq. in.

ΔP (with weight) = 6.5 cm. of Hg = 0.59 lbs. f/sq. in.

$F' = (P_3 - P_4) A$

where F' = force exerted downward on bellows by the rod attached to screen, lbs. f

P_4 = pressure acting downward on bellows due to nitrogen pressure, lbs. f/sq. in.

P_3 = pressure acting upward on bellows due to water pressure, lbs. f/sq. in.

A = area of bellows, sq. in.

Diameter of bellows = 1.125 in.

Area of bellows = $(\pi/4)(1.125)^2 in^2 = 0.994$ sq. in.

F' (no load) = (0.24 lbs. f/sq. in.)(0.994 sq. in.)

$F' = 0.238$ lbs. f

F' (with weight) = $(0.59 \text{ lbs. f/in}^2)$(0.994 sq. in.)

$F' = 0.586$ lbs. f

Calculated weight on screen = 0.586 - 0.238 = 0.348 lbs. f

Calculated weight minus actual weight:

0.348 lbs. f - 0.190 lbs. f = 0.158 lbs. f

Calculation of right side of equation (10): (See Table VI)

$$\text{Right side of equation (10)} = \frac{1 - e^{\frac{-4fL}{D}}}{f}$$

where f = coefficient of friction between resin bed and column wall

L = length of resin bed, in.

D = inside diameter of column, in.

For a resin bed length = 1.00 inches

and $f = 0.100$

$$\frac{1 - e^{-\frac{4(0.100)(1.00\text{ in.})}{(4\text{ in.})}}}{0.100} = \frac{1 - e^{-0.100}}{0.100}$$

$$\frac{1 - 0.90484}{0.100} = \frac{0.09516}{0.100} = 0.9516$$

Calculation of the left side of equation (10) using experimental data to determine the coefficient of friction:

Original data taken from Table II (Set I):

ΔP (no load) on manometer III = 4.4 cm. Hg

ΔP on manometer I = 40.0 cm. of Hg

ΔP on mamometer II = 1.55 cm. of red oil

ΔP on manometer III = 9.9 cm. of Hg

Rotameter Reading = 32

Resin bed length = 1.00 inches

By interpolating from Table V:

ΔP on manometer III (no load) = 0.20 bls. f/sq. in.

ΔP on manometer I = 6.47 lbs. f/sq. in.

ΔP on manometer II = 0.042 lbs. f/sq. in.

ΔP pm manometer III = 1.22 lbs. f/ sq. in.

F' = force down on bellows = $(P_3 - P_4)A$

F' (no load) = (0.20 lbs. f/sq. in)(0.994 sq. in.)

F' = 0.199 lbs. f

F' (with resin) = (1.22 lbs. f/sq. in.)(0.994 sq. in.)

Actual weight of resin on screen:

Diameter of rod attached to screen = 0.25 in.

Diameter of column = 4 in.

Volume of 1.00 inch resin bed:

$\pi/4\ (D^2)L = \pi/4\ (4^2 - 0.25^2)$sq.in.(1.00)in.

$= \pi/4\ (16 - 0.00625)$cu. in.

$= \pi/4\ (15.94)$ cu. in.

= 12.53 cu. in.

Density of resin = 1.32 grams/cc.

Effective density in water = 1.32 - 1.00 = 0.32 gms./cc.

Weight of resin = (12.53 cu.in.) $\frac{0.32 \text{ gms}}{\text{cc}}$ $\frac{2.54 \text{ cu. cc}}{\text{cu.in.}}$ = 65.6

(65.5 grams)$\frac{\text{lbs. f}}{454 \text{ grams}}$ = 0.145 lbs. f

From Figure 5:

At actual weight = 0.145 lbs. f

(Average calculated weight - Actual weight) = 0.130 lbs. f

Weight to be subtracted from downward force on bellows =

$$(0.199 + 0.145 + 0.130) \text{ lbs. f}$$

$$= 0.474 \text{ lbs. f}$$

Left side of equation (10) = $\frac{4 P_R(\Delta L)}{D (\Delta P_L)}$

where P_R = pressure dissipated to the resin bed, lbs. f/sq.in.

ΔL = length of resin bed, in.

D = diameter of the column, in.

ΔP_L = pressure drop in the moving liquid, lbs. f/sq.in.

$$P_R = \frac{\text{force down on bellows}}{A'}$$

where A' = cross-sectional area of column, sq. in.

$$P_R = \frac{(1.213 - 0.474) \text{ lbs. f}}{\pi/4 \ (4)^2 \text{ in}^2} = \frac{0.739 \text{ lbs. f}}{\pi/4(4)^2 \text{in}^2}$$

$$P_R = 0.0587 \text{ lbs. f/sq. in.}$$

$$\Delta L = 1.00 \text{ inches}$$

$$D = 4.0 \text{ inches}$$

$$\Delta P_L = 0.042 \text{ lbs. f/sq. in. (manometer II)}$$

$$\frac{4 P_R(\Delta L)}{D(\Delta P_L)} = \frac{4(0.0587 \text{ lbs. f})(1.00 \text{ in.})(\text{in}^2)}{(4.0 \text{ in.}) \ (\text{in}^2) \ (0.042 \text{ lbs. f})} = 1.398$$

Read value of f from Figure 6:

As the coefficient of friction approaches zero, the left side of equation (10) should approach the bed length. Therefore as stated in the discussion of the results, the value of the coefficient of friction is indeterminate.

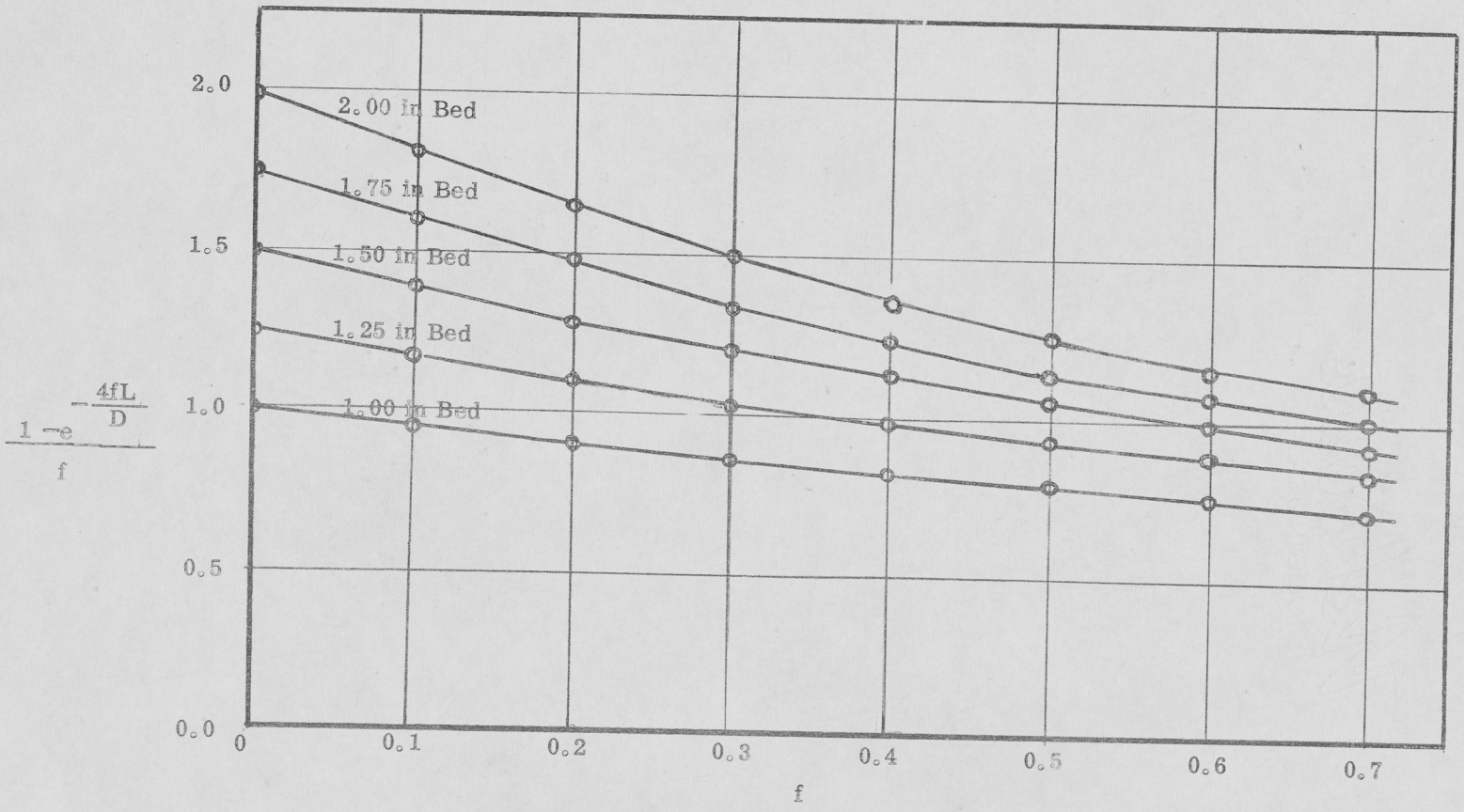

FIGURE 6. $\frac{1-e^{-\frac{4fL}{D}}}{f}$ VS. f

EXPLANATION OF TABLES IV-VI

Table IV gives the data for the rotameter calibration. Column (1) gives rotameter readings. Column (2) gives the water flow rates in gallons per minute corresponding to the roatmeter reading in column (1).

The three manometer calibrations are given in Table V. Internal pressure within the column is given in columns (1) and (2). Column (1) gives the observed pressure in cm. of mercury. Column (2) gives the corresponding actual pressure in psig. The pressure drops across the resin bed are given in columns (3) and (4). Column (3) gives observed pressure drop in cm. of Red Oil (specific gravity 2.95). The actual pressure drop across the resin bed in psi is given in column (4) Columns (5) and (6) give the pressure differential across the bellows. Column (5) gives the observed pressure differential in cm. of mercury. The actual pressure differential in psi is given in column (6).

Table VI gives an evaluation of the right side of equation (10), $\frac{1 - e^{-\frac{4fL}{D}}}{f}$. The value of the coefficient of friction, f, is given in column (1). Corresponding values of $\frac{1 - e^{-\frac{4fL}{D}}}{f}$ are given in columns (2) through (6) for bed lengths from 1.00 inch to 2.00 inch. The resulting values of $\frac{1 - e^{-\frac{4fL}{D}}}{f}$ are plotted versus f in Figure 6.

TABLE IV

ROTAMETER CALIBRATION

Rotameter Reading (1)	Water Flow Rate gal/min (2)
20	0.367
30	0.561
40	0.764
50	0.918
60	1.156
70	1.341
80	1.561
90	1.788
100	2.002
95	1.802
85	1.634
75	1.457
65	1.219
55	1.011
45	0.831
35	0.646
25	0.458
15	0.270

TABLE V

MANOMETER CALIBRATIONS

Man. I Reading cm. Hg (1)	Column Pressure psig (2)	Man. II Reading cm. Red Oil (3)	ΔP Across Resin Bed psi (4)	Man. III Reading cm. Hg (5)	ΔP Across Bellows psi (6)
20	2.75	0	0	0	-0.625
30	4.60	2	0.055	3	-0.066
40	6.47	4	0.112	6	0.492
		6	0.167	9	1.050
		8	0.223	12	1.607
		10	0.278	15	2.163
		12	0.331	18	2.726
				21	3.286
				24	3.845
				27	4.393
				30	4.962
				33	5.478
				36	6.080
				39	6.638
				42	7.177

TABLE VI

EVALUATION OF THE TERM $\frac{1 - e^{-\frac{4fL}{D}}}{f}$

Coefficient of Friction f (1)	$\frac{1 - e^{-\frac{4fL}{D}}}{f}$ Bed Length 1.00 in. (2)	1.25 in. (3)	1.50 in. (4)	1.75 in. (5)	2.00 in. (6)
0.001	0.99950	1.24920	1.49890	1.74847	1.99800
.002	.99900	1.24845	1.49775	1.74695	1.99600
.004	.99750	1.24750	1.49500	1.74500	1.99250
.006	.99667	1.24500	1.49333	1.74167	1.98833
.008	.99625	1.24375	1.49125	1.73750	1.98375
.010	.99500	1.24200	1.48900	1.73500	1.98000
.020	.99000	1.23450	1.47800	1.72000	1.96050
.040	.98025	1.21925	1.45600	1.69025	1.92200
.060	.97067	1.20433	1.43450	1.66133	1.88467
.080	.96100	1.18950	1.41350	1.63300	1.84825
.100	.95165	1.17500	1.39290	1.60540	1.81217
.120	.94233	1.16075	1.37275	1.57850	1.77808
.140	.93314	1.14671	1.35300	1.55214	1.74443
.160	.92412	1.13294	1.33562	1.52638	1.71156
.180	.91517	1.11933	1.31455	1.50117	1.67955
.200	.90635	1.10600	1.29590	1.47655	1.64840
.240	.88904				
.250		1.07352	1.25084	1.41744	1.57388
.300	.86393	1.04237	1.20790	1.36147	1.50397
.340	.84774				
.350		1.01243	1.16700	1.30860	1.43834
.400	.82420	0.98368	1.12798	1.25855	1.37668
.440	.80898				
.450		.95604	1.09075	1.21116	1.31873
.500	.78694	.92948	1.05526	1.16628	1.26424
.540	.77268				
.550		.90394	1.02140	1.12374	1.21296
.600	.75198	.87938	0.98905	1.08343	1.16468
.640	.73861				
.650		.85577	.95817	1.04520	1.11918
.700	.71917	.83306	.92866	1.00891	1.07629

NOMENCLATURE

A = area of bellows, sq. in.

A' = cross sectional area of column, sq. in.

D = diameter of the column, in.

dL = differential length of resin bed, in.

dP_L = differential pressure drop in the moving liquid, lbs. f/sq. in.

dP_R = differential pressure dissipated to the resin bed, lbs. f/sq. in.

ΔL = length of resid bed, in.

ΔP_L = pressure drop in the moving liquid, lbs. f/sq. in.

f = coefficient of friction between the resin bed and column wall

F = force which is dissipated to the resin and column wall by the liquid, lbs. f

F' = force exerted downward on bellows by the rod attached to screen, lbs. f

F_1 = force exerted equally in all directions by the resin, lbs. f

F_2 = vertical friction force exerted to the column by the resin, lbs. f

$\frac{g}{gc}$ = unity factor, (lbs. f)(ft)(sec^2)/(sec^2)(lbs. m)(ft)

lbs.f = pounds force

lbs.m = pounds mass

m = height of nitrogen in manometer above mercury, in.

m' = height of air in manometer above mercury, in.

P_1 = absolute pressure exerted by water above resin bed, lbs. f/sq. in.

P_2 = absolute pressure exerted by water below resin bed, lbs. f/sq.in.

P_3 = pressure acting upward on bellows due to water pressure, lbs. f/sq.in.

P_4 = pressure acting downward on bellows due to nitrogen pressure, lbs. f/sq. in.

$P_5 - P_6$ = difference in column and atmospheric pressure, lbs. f/sq. in.

P_R = pressure dissipated to the resin bed, lbs. f/sq.in.

ρ_{air} = density of air, lbs. m/cu. in.

ρ_{Hg} = density of mercury, lbs. m/cu. in.

ρ_{H_2O} = density of water, lbs. m/cu. in.

ρ_{N_2} = density of nitrogen, lbs. m/cu. in.

R = manometer reading, difference in height of mercury. in.

APPROVAL

The foregoing thesis is hereby approved as a creditable study of an engineering subject, carried out and presented in a manner sufficiently satisfactory to warrant its acceptance as a prerequisite to the degree for which it has been submitted. It is understood that by this approval the undersigned does not necessarily endorse or approve any statement made, opinion expressed, or conclusions drawn therein, but approves the thesis only for the purpose for which it is submitted.

Name _____

Title _____

Date _____