February 7, 1973

To the Graduate Council:

I am submitting herewith a thesis written by Margarita Kwuris Churchich entitled "Real Time Measurement of Subcriticality for a Fast-Breeder Reactor." I recommend that it be accepted for nine quarter hours of credit in partial fulfillment of the requirements for the degree of Master of Science, with a major in Computer Science.

Julian S. Smith
Major Professor

We have read this thesis and recommend its acceptance:

Robert M. Aiken

Norbert J. Ackermann

B. C. Ismail

James C. Robinson

Accepted for the Council:

Hilton A. Smith
Vice Chancellor for
Graduate Studies and Research

REAL TIME MEASUREMENT OF SUBCRITICALITY FOR A FAST-BREEDER REACTOR

A Thesis

Presented to

the Graduate Council of

The University of Tennessee

In Partial Fulfillment

of the Requirements for the Degree

Master of Science

---

by

Margarita Kwuris Churchich

March 1973

ACKNOWLEDGMENT

This work was supported by Subcontract Number 2476 between the Nuclear Engineering Department of The University of Tennessee and the Instrumentation and Controls Division of the Oak Ridge National Laboratory. The Oak Ridge National Laboratory is operated by Union Carbide Corporation for the U. S. Atomic Energy Commission.

For his constant help and encouragement in the development of this project, the author is indebted to her advisor, Dr. Julian E. Mott. Appreciation is also expressed to Dr. James C. Robinson for offering many helpful suggestions and to Kenneth Piety for his contribution in writing Appendix C. Finally, special thanks are due to Mrs. Nita Rye who prepared the drafts for this report.

1069394

ABSTRACT

The purpose of this project is to design and develop a data processing system for measuring subcritical reactivity in fast reactors in a real time environment.

An interface was designed to condition the signals from seven neutron detection systems that are located in the reactor, and to transfer these signals into a digital computer. A program was developed to permanently store and process the data simultaneously. The solutions were obtained by two methods; one, the source iteration method, which is time consuming and can be used for only a single selected sensor, while the other, a three point method, is used for all seven sensors.

The approach taken to design the system has the unique feature that results are obtained immediately after the transient, caused by the rod drop, has terminated.

The values obtained by the two methods, using simulated data, were consistently close to the expected results. When the system was tested with real data, the three point method showed a better approximation to the expected results than the source iteration method. The processing of the stored data on the MiniDek displayed answers equivalent to the ones obtained in the real time test.

TABLE OF CONTENTS

CHAPTER		PAGE
I.	INTRODUCTION	1
II.	THEORY, METHODS, AND GENERAL IMPLEMENTATION	3
	Theory	3
	Three Point Method	5
	Source Iteration Method	7
	Algorithm	8
III.	DESCRIPTION OF THE HARDWARE	12
	Computer	12
	Input-Output Equipment	13
	Storage Equipment	13
	Interface	14
IV.	PROGRAM CONSIDERATIONS	20
	Program Functions	20
	"WRITE" Routine	21
	"PLOTTING" Routine	40
	"READ" Routine	40
	Storage Logic	40
	Source iteration method	46
	Three point method	46
	Storage of counts	46
	Permanent Storage of Data	49
V.	RESULTS	51

CHAPTER PAGE

VI. CONCLUSIONS AND RECOMMENDATIONS 55

LIST OF REFERENCES 57

APPENDIXES 59

A. OPERATING INSTRUCTIONS 60

B. INTERFACE SCHEMATICS 62

C. "PLOTTING" ROUTINE 67

VITA 72

LIST OF FIGURES

FIGURE		PAGE
1.	Interface Control Circuit and Timing	16
2.	Interface Scaling Circuit	19
3.	Timing Diagram for the "WRITE" Routine	22
4.	This Module Performs the Dialog with the Operator and Scales the Counts ("WRITE" Routine)	23
5.	This Module Calculates the Mean and Standard Deviation ("WRITE" Routine)	25
6.	This Module Detects the Rod Drop ("WRITE" Routine)	26
7.	This Module Stores and Processes Data During the Transient ("WRITE" and "READ" Routines)	27
8.	This Module Performs the Three Point Method Calculations ("WRITE" and "READ" Routines)	33
9.	This Module Performs the Source Iteration Calculations ("WRITE" and "READ" Routines)	34
10.	This Module Performs the Least-Square Fit ("WRITE" and "READ" Routines)	37
11.	This Module Performs the Convergence Test ("WRITE" and "READ" Routines)	39
12.	Timing Diagram for the "READ" Routine	41
13.	This Module Performs the Dialog with Operator ("READ" Routine)	42

FIGURE PAGE

14. This Module Calculates the Mean and Standard Deviation ("READ" Routine) 43

15. This Module Detects the Rod Drop ("READ" Routine) 44

16. This Module Stores and Processes Data During the Transient ("READ" Routine) 45

17. Storage Logic; Beginning of Buffer 47

18. Storage Logic; End of Buffer 48

19. Results of a Typical Rod Drop Experiment. (Channels 5 and 6 were not Scaling Properly) 52

20. Reactivity Versus Time 53

21. Counts Versus Time 54

22. Channel 7 and Control Logic Circuits 63

23. Channels 1 and 2 Circuits 64

24. Channels 3 and 4 Circuits 65

25. Channels 5 and 6 Circuits 66

CHAPTER I

INTRODUCTION

The purpose of this thesis is to design and develop a data processing system for measuring subcritical reactivity in fast reactors.

This system will be used on the experiment at the ZPR-9 Critical Facility of the Argonne National Laboratory and has the following requirements:

1. Incorporate a computer that is portable and that will allow processing in a real time environment.

2. Utilize interface equipment which will condition the signals from the seven neutron sensors located in the reactor core and transfer them into the computer at precise time intervals ($\simeq$ 100 msec apart). The signals from individual sensors can be either analog or digital and provisions must be made to interface both.

3. The data from all seven neutron sensors must be examined during the steady state operation. The steady state mean value and its standard deviation must be computed for use when the transient has begun.

4. Once the test is in process, the data from all sensors must be stored permanently (on tape cartridge). The data acquisition and the data storing operations must be performed without interruption.

5. Simultaneously, the inverse kinetics equation must be solved in real time by two methods; one, the source iteration method, is time consuming and can be used for only a single selected sensor while the

other, a three point method, is used for all seven sensors. At the end of the transient, the operator must be able to decide if the test was successful.

6. The values of the reactivity and source strength obtained in Item 5 by the source iteration method are used to construct a neutron density vs. time curve from the kinetics equations, and this curve is compared to the data to test the efficacy of the inverse kinetics algorithm. This requires an output configuration which presents these results in a manner which is meaningful to the test operator.

7. Finally, the data from all sensors must be available for recovery. Items 5 and 6 could be repeated by choosing a different sensor to be processed by the source iteration method.

The approach taken to design the system has the unique feature that results are obtained immediately after the transient has terminated. This allows the operator to determine immediately whether or not the test was successful.

CHAPTER II

THEORY, METHODS, AND GENERAL IMPLEMENTATION

I. THEORY

In order to analyze the time-dependent behavior, or kinetics, of a subcritical fast nuclear reactor, it is necessary to solve the point kinetics equations. The reactor is examined initially at steady state, and then after a step change in reactivity (a rod drop). Specifically, it is necessary to determine the source strength and reactivity given the neutron density as a function of time.

Mathematically, we describe the time-dependent behavior of a subcritical reactor by the point kinetics equations[1]:

$$\frac{dn}{dt} = \frac{(\rho^* - 1)\ \beta n}{\Lambda} + \sum_{i=1}^{m} \lambda_i C_i + S \qquad 1.1$$

and

$$\frac{dC_i}{dt} = \frac{\beta_i\ n}{\Lambda} - \lambda_i C_i \qquad 1.2$$

where

m = number of delayed neutron groups (24 in this study).

n = neutron density, neutrons/cm^3.

β_i = fractional yield of precursors of delayed neutrons for group i.

$\rho^* = \frac{\rho}{\beta}$; reactivity, dollars.

λ_i = decay rate of precursors of the ith group, sec^{-1}.

C_i = ith precursor group concentration, $nuclei/cm^3$.

S = effective external source, neutrons/sec.

Λ = prompt neutron generation time, sec.

We want to solve the inverse equations for a rod drop such that ρ^* changes instantaneously from ρ_i^* (initial reactivity) to ρ_f^* (final reactivity) and we have measurements of n vs. time. We want to solve equations (1.1) and (1.2) for ρ^* and S.

Now, let

$$N = \alpha\, n \tag{1.3}$$

and

$$K_i = \frac{\lambda_i C_i \Lambda \alpha}{\beta_i} \tag{1.4}$$

where

N = number of pulses counted in 100 msec.

α = proportionality constant.

K_i = adjusted concentration of the ith precursor group.

Substituting Equation (1.4) into Equation (1.2) yields:

$$\frac{dK_i}{dt} = N\lambda_i - K_i\lambda_i \,. \tag{1.5}$$

Integrating both sides of Equation (1.5) between t and t+Δt yields:

$$K_i(t+\Delta t) \simeq K_i(t)e^{-\lambda_i \Delta t} + \bar{N}(1-e^{-\lambda_i \Delta t}) \qquad 1.6$$

where $K_i(0) = N(0)$, and $\bar{N}$ is the weighted mean number of counts obtained between t and t+Δt.

Equation (1.6) provides a recursive relation for the rate of release of the ith group of delayed neutrons. Combining Equations (1.3) and (1.4) with Equation (1.1) yields:

$$\frac{\Lambda}{\beta}\frac{dN}{dt} = (\rho^*-1)N + \sum_{i=1}^{m} \frac{\beta_i}{\beta} K_i + S^* \qquad 1.7$$

where

$$S^* = \frac{S\alpha\Lambda}{\beta} .$$

II. THREE POINT METHOD[2]

The three point method is used to obtain real time results for all seven sensors. Considering Equation (1.7), β_i and β are known, N is obtained directly from the readings of the sensors, and K_i can be calculated from Equation (1.6). The unknowns are ρ* and S*. Assuming the term on the left side of Equation (1.7) is insignificant compared to the other terms ($\Lambda = 0.1 \times 10^{-6}$) and integrating Equation (1.7) between different time intervals, we obtain a system of two equations in two unknowns:

$$(\rho^*-1)\int_{t_1}^{t_2} N\,dt + \int_{t_1}^{t_2} S^*\,dt = -\int_{t_1}^{t_2} \sum_{i=1}^{m} \frac{\beta_i}{\beta} K_i\,dt \qquad 1.8$$

and

$$(\rho^*-1)\int_{t_2}^{t_3} N\,dt + \int_{t_2}^{t_3} S^*\,dt = -\int_{t_2}^{t_3} \sum_{i=1}^{m} \frac{\beta_i}{\beta} K_i\,dt \qquad 1.9$$

where $t_3 > t_2 > t_1$. Equations (1.8) and (1.9) can be approximated by

$$(\rho^*-1) \sum_{j=T_1}^{T_2} N_j \Delta t + S^*(T_2-T_1)\Delta t = -\sum_{j=T_1}^{T_2} \sum_{i=1}^{m} \frac{\beta_i}{\beta} K_{ij} \Delta t$$

and

$$(\rho^*-1) \sum_{j=T_2}^{T_3} N_j \Delta t + S^*(T_3-T_2)\Delta t = -\sum_{j=T_2}^{T_3} \sum_{i=1}^{m} \frac{\beta_i}{\beta} K_{ij} \Delta t$$

where $t_1 = T_1\Delta t$; $t_2 = T_2\Delta t$; $t_3 = T_3\Delta t$, and the added index j in K_{ij} and N_j refers to the time point. The values of T_1, T_2 and T_3 were arbitrarily set at 6 (after rod drop), 250 and 2400 (4 minutes), respectively.

These equations are solved to obtain:

$$\rho_f^* = 1 + \frac{\left(\sum_{j=T_2}^{T_3} \sum_{i=1}^{m} \frac{\beta_i}{\beta} K_{ij}\right)(T_2-T_1) - \left(\sum_{j=T_1}^{T_2} \sum_{i=1}^{m} \frac{\beta_i}{\beta} K_{ij}\right)(T_3-T_2)}{D}$$

and the source is:

$$S^* = \frac{\left(\sum_{j=T_1}^{T_2} \sum_{i=1}^{m} \frac{\beta_i}{\beta} K_{ij}\right)\left(\sum_{j=T_2}^{T_3} N_j\right) - \left(\sum_{j=T_2}^{T_3} \sum_{i=1}^{m} \frac{\beta_i}{\beta}\right)\left(\sum_{j=T_1}^{T_2} N_j\right)}{D}$$

where

$$D = (T_3-T_2)\left(\sum_{j=T_1}^{T_2} N_j\right) - (T_2-T_1)\left(\sum_{j=T_2}^{T_3} N_j\right) .$$

Having ρ_f^* and S^*, the reactivity before the rod drop (ρ_i^*) is found from

$$\rho_i^* = -\frac{S^*}{N(0)} .$$

III. SOURCE ITERATION METHOD[3]

The source iteration method is used to find the reactivity and the source for one selected sensor. This method has the advantage of computing reactivity versus time.

Write Equation (1.7) as:

$$\frac{\Lambda}{\beta}\frac{1}{N}\frac{dN}{dt} = \rho^* - 1 + \frac{1}{N}\sum_{i=1}^{m}\frac{\beta_i}{\beta}K_i + \frac{S^*}{N} . \qquad 1.10$$

As was previously noted it is assumed that the left side of this equality is insignificant relative to the other terms, then Equation (1.10) can be written as

$$\rho^*(t) = 1 - \frac{1}{N(t)} \sum_{i=1}^{m} \frac{\beta_i}{\beta} K_i(t) - \frac{S^*}{N(t)} \quad . \qquad 1.11$$

In this analysis, the reactivity is assumed to be constant (ρ_f^*) after the rod has seated. The object of the source iteration method is to choose a value of S* which yields a constant value for ρ_f^* for times greater than the time required for the rods to seat.

IV. ALGORITHM

During the real time phase of the experiment the data processing is restricted to the time interval between two consecutive readings (100 msec). Therefore, integer arithmetic was a necessity at that stage of the test.

At the beginning of the experiment the reactor is at steady state; nevertheless, the count rate exhibits fluctuations. Due to this fact, during the stable state, the mean (μ) and the standard deviation (σ) of the count rate are calculated. To determine occurrence of the rod drop, the quantity ($\mu - \sigma$) is compared with the incoming data. Then, if 40 consecutive readings show that $N_i \leq \mu - \sigma$, the data from all channels are stored, and the first reading is taken as the breakpoint where the rod drop took place.

For the three point method calculations Equation (1.6) is solved for every t and for each λ_i, and the values of K_i and the summations

$$\sum_{j=T_1}^{T_2} \sum_{i=1}^{m} \frac{\beta_i}{\beta} K_{ij} , \quad \sum_{j=T_1}^{T_2} N_j ,$$

$$\sum_{j=T_2}^{T_3} \sum_{i=1}^{m} \frac{\beta_i}{\beta} K_{ij}, \text{ and } \sum_{j=T_2}^{T_3} N_j$$

are updated at each different sample time.

The source iteration method has a logic for storage organized according to a logarithmic base. Of the 2,400 data points read, only 130 points are stored at selected times (see Table I). At these times the terms $\sum_{i=1}^{m} \frac{\beta_i}{\beta} K_i$ and $\frac{N(t) + N(t+\Delta t)}{2}$ are calculated and stored (Equation (1.11)).

To determine S^*, ρ_f^*, and ρ_i^*, a value of S_j^* is assumed and $\rho_1^*, \rho_2^*, \ldots, \rho_{130}^*$ are obtained by solving Equation (1.11) using the stored data. Then $\rho_1^*, \rho_2^*, \ldots, \rho_{130}^*$ are fitted into the straight line $\rho^* = a_j + b_j t$ by the least-square procedure. A second value for the source, S_{j+1}^* is assumed and by using the same procedure a new value of the slope b_{j+1} is calculated. To estimate the next source, we plot source versus slope and extrapolate to S_{j+2}^* where the slope is zero:

$$S_{j+2}^* = \frac{b_j S^*_{j+1} - b_{j+1} S_j^*}{b_j - b_{j+1}} .$$

This iterative procedure is continued until the new value of the source is judged sufficiently close to the previous value.

TABLE I

STORAGE OF COUNTS

Data Points	Points Stored
1 to 31	Each point
32 to 63	Every other point
64 to 127	Every 4th point
128 to 255	Every 8th point
256 to 511	Every 16th point
512 to 1023	Every 32nd point
1024 to 2047	Every 64th point
2048 to the end of transient	Every 128th point

Thus, if

$$\left| \frac{S^*_{j+2} - S^*_{j+1}}{S^*_{j+2}} \right| \leq \varepsilon \qquad 1.12$$

the convergence is satisfied. For the accuracy desired $\varepsilon = .01$.

When Equation (1.12) is finally satisfied in the mth iteration, we set $\rho^*_f = a_m$; $S^* = S^*_m$, and $\rho^*_i = -\frac{S^*}{\mu}$. Equation (1.11) is solved using S^*_m and ρ^*_1 , ρ^*_2 , ..., ρ^*_{130} are stored for later use in the "PLOTTING" routine (Appendix C).

CHAPTER III

DESCRIPTION OF THE HARDWARE

I. COMPUTER

A PDP-11/20 minicomputer made by Digital Equipment Corporation was selected. The characteristics of this particular computer are:

1. A 8192 word memory.

2. Eight general purpose registers. These registers, referred to as R0, R1, ..., R7 may be used as accumulators, as auto index registers, or as pointers. General register R6 serves as the hardware stack pointer, and R7 is the program counter.

3. Four-line, multilevel automatic priority interrupt. A multiline automatic priority interrupt system allows the processor to respond automatically to conditions outside the system. Each peripheral device in the PDP-11 system has a hardware pointer to its own pair of memory words. One points to the device's service routine, and the other contains the new processor status information. The interrupt system allows the processor to continually compare its own programmable priority with the priority of any interrupting devices and to acknowledge the device with the highest level above the processor's priority level. Setting the processor's priority to a determined level will inhibit granting of BUS requests on lower levels or on the same level. Servicing an interrupt for a device can be interrupted for servicing a higher

priority device. Service to the lower priority device is resumed automatically upon completion of the higher level servicing. Such a process is called nested interrupt service.

4. Extended Arithmetic Element (KE-11A). The Extended Arithmetic Element (EAE) is an optional element which performs integer multiplication and division, multiple position shifts, and normalization considerably faster than software routines. It is connected directly to the UNIBUS and is programmed as a peripheral, allowing overlap between the central processor and the EAE operations.

Since in the simultaneous real time data gathering and data processing, speed is a factor of primary importance, the EAE was of substantial help in the performance of the test.

II. INPUT-OUTPUT EQUIPMENT

1. ASR 33 teletype (DEC model number LT33-DC). The ASR 33 teletype prints information at a rate of up to 10 characters per second and is used mainly for communication between the operator and the program. It is also used to print the results after the completion of the real time test.

2. Plotter. Specifications for the plotter and instructions for its proper use are given in Appendix C.

III. STORAGE EQUIPMENT

The Tennecomp Systems TP-1371 MiniDek four-track cartridge magnetic tape recorder is used for the storage of the program that performs the

experiment and also for the storage of the data taken from the reactor during the real time phase of the test. The MiniDek structure can be separated into three main parts.

1. The tape transport which includes all mechanical parts of the MiniDek, such as motor, capstan, pinch roller, cartridge, magnetic head, and the End/Beginning of tape sensors. The front panel of the transport has a switch for the selection of the track desired to read or write on. The AUTO position should not be chosen because, for this particular program, it will service only track one. The FILE PROTECT light will turn on when an attempt to write is made and the "write button" is not inserted on the cartridge.

2. Read/Write amplifiers and associated electronics for assembling data written on the tape, and the circuitry to control the movement of the tape. The write amplifiers are part of a TP-21, TTL of Negative Sink Driver card, located at the bottom of the transport chassis. The read amplifier is a TP-014-A amplifier card and is located in the small compartment directly behind the track select switch.

3. The interface between the tape recorder and the PDP-11/20 to which the tape is connected.

IV. INTERFACE

An interface was designed to provide timing, accumulate the counts from the seven sensors, and strobe the data into the computer. A DR11-C General Device Interface provides the logic and buffer register for transfers of the 16-bit input and output between the counter interface

and the computer. Four DR11's were needed for this design; three DR11-C's control two channels each (channels 1 through 6) and the fourth DR11-C controls channel 7 and the logic of the circuits. Thus, the only status register used is the one connected to channel 7, at address 167770.

The first three DR11-C's described above have two output buffers (one byte for each channel) and one input buffer (two bytes) connected to a multiplexer. All bits of the output buffers may be read and all bits may be set or cleared while the input buffer only allows the reading of all bits. Two consecutive readings of the same input buffer will provide successive data from two channels to be read into the computer. This is accomplished by the DATA TRANSMITTED pulse from the DR11-C(A1V2) which strobes the multiplexer (A10 P2 and A10 R2)(see Appendix B).

Since the number of counts from the sensors may be higher than 2^{15}, a scaling of the data is performed prior to its transmission to the DR11-C device. This scaling is accomplished during the initial steady state before any computation is attempted. The scaling factor is saved and the real value of the counts is restored before the answers are printed on the teletype.

This interface was designed to keep an accurate record of the neutron flux from all sensors. It is possible to subdivide the functions of these circuits into three main parts:

a. The Control of the Logic Circuits is shown in Appendix B and in Figure 1. An M404 crystal clock, with a frequency output of 5KHz,

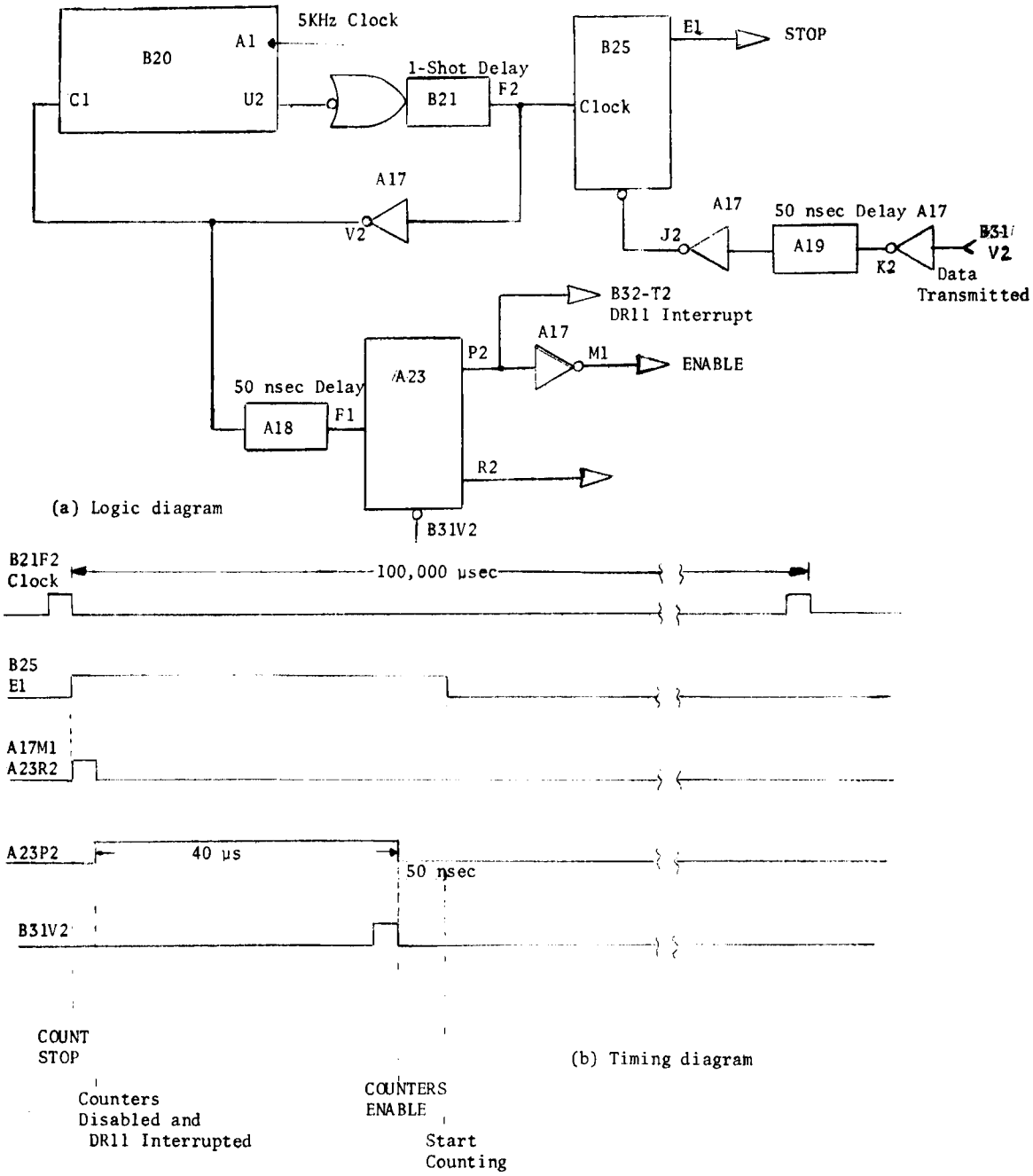

Figure 1. Interface control circuit and timing.

connected to a M236 12-bit binary up/down counter, controls the interrupt timing of the DR11-C devices. By setting the DATA input lines of the counter to 500 (764 octal), a CARRY OUT pulse (B20 U2) triggers every 0.1 sec. The ENABLE input (B24 B1) is always held high as well as the UP/DN input (B24 V2), providing a continuous down-count. The CARRY-OUT pulse (B20 U2) drives an M302 Dual Delay Multivibrator whose output (B21 F2) feeds the CLOCK input of an M207 general-purpose flip-flop (B25 B1). The output of this flip-flop (B25 E1) is a high level that stops all counters of the circuit. The output of the M302 Delay is also driven through an M111 inverter and its output (A17 V2) feeds, on the rising edge of the pulse, an M130 Delay line (A18 H2) giving an output pulse with a 50 nsec delay. This output pulse feeds the CLOCK of an M207 flip-flop (A23 L2), and its outputs will disable all counters and by holding B32 V2 high will cause an interrupt to occur on the DR11-C.

The NEW DATA READY output (i.e., A2V2) from the DR11-C resets flip-flop A23 (A1) and all flip-flops directly connected to the up/down counters. Simultaneously, the LOAD DATA input of the up/down counters (A9C1, channel 1) goes low and the outputs of the flip-flop A23 (A23 P2 and A23 R2) enable the up/down counters.

The DATA TRANSMITTED output from the DR11-C (B31 V2), after a 50 nsec delay and two inversions (A17 J2), resets flip-flop B25. Its output (B25 E1) carries a high level in the COUNT IN inputs of the M236 reinitiating the normal counting.

b. The scaling of counts is shown in Appendix B, and in Figure 2. Since all channels have the same logic, the explanation below refers to channel 1, but it is valid for the scaling of the counts from all channels.

The output buffer of the DR11-C controls the scaling of the data coming into the counter. If a bit is held high the NOR gate to which it and the data line are attached is disabled and the corresponding flip-flop (which divides the count rate by two) is enabled. Thus, a high level on A2P2 causes a division by two, a high level on A2P2 and A2M2 causes a division by four, etc.

c. The Up/Down counters are shown in Appendix B. Each channel has two M236 12-bit up/down counters. All DATA input lines are held high (V1 A13) except for channel 7 where the DATA input lines are held low. In channels 1 through 6, the UP/DN line (A9V2) is held high giving a down-count, and in channel 7, the UP/DN line (B26 V2) is held low giving an up-count. Channels 1 through 6 are connected to multiplexers which invert the incoming signals and send the complement of their contents to the DR11-C device, but channel 7, which is not connected to a multiplexer, sends its contents directly to the DR11-C.

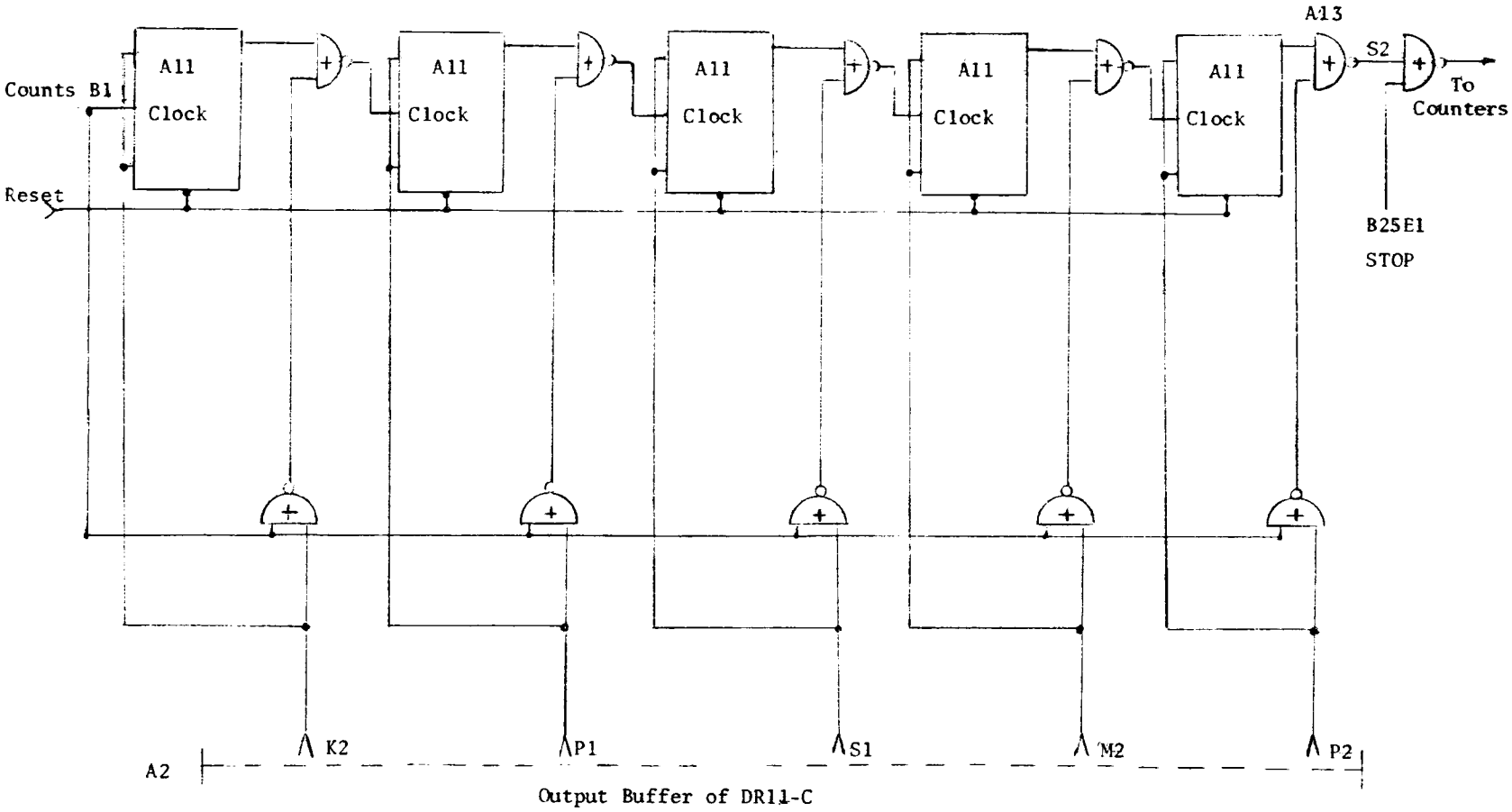

Figure 2. Interface Scaling circuit.

CHAPTER IV

PROGRAM CONSIDERATIONS

I. PROGRAM FUNCTIONS

The "WRITE" routine is stored on Track 1 of the 8K cartridge. This program operates in real time, writes the data on a 64K cartridge, and performs calculations to find the source, initial reactivity, and final reactivity using the source iteration method for a specified channel and the three point method for all seven channels.

The "PLOTTING" routine is stored in Track 2 of the 8K cartridge. This program will perform the following steps in the specified order:

1. Plot the reactivities, obtained from the source iteration method, versus time. These reactivities are stored on top of core after the completion of either the program in Track 1 or Track 3 of the 8K cartridge.

2. Calculate the theoretical counts versus time using the delay group equations together with the source iteration reactivities.

3. Plot

    a. Theoretical counts versus time.

    b. Experimental counts versus time.

4. Calculate the theoretical and experimental integral counts versus time.

5. Plot

   a. Theoretical integral counts versus time.

   b. Experimental integral counts versus time.

The "READ" routine is stored in Track 3 of the 8K cartridge. This program reads the data from the 64K cartridge and performs the same calculations as the program in Track 1.

II. "WRITE" ROUTINE

Interrupt devices used in the program are:

1. DR11-C register interface.

2. TP-1371 MiniDek cartridge magnetic tape.

The DR11-C has hardware priority level 5 and software priority level 7. The TP-1371 MiniDek has hardware priority level 4 and software priority level 4. The processor's priority level is set to 0 at the beginning of the program to ensure that the interrupt devices are granted access to the UNIBUS every time that they request so. According to this setup, the DR11-C device has the highest priority, next is the MiniDek, and the central processor has the lowest priority. The teletype is not programmed to work with interrupts.

Module "MAIN" sets up the organization of the real time aspect of the program. The first instructions to the operator (Figures 3-A and 4) tell him to insert the "write" button on the 64K cartridge and to place the cartridge in the slot on the front of the tape transport. When the operator is ready, he types an "X" and the MiniDek starts rewinding. Since the MiniDek will not interrupt until it finds the splice (it takes

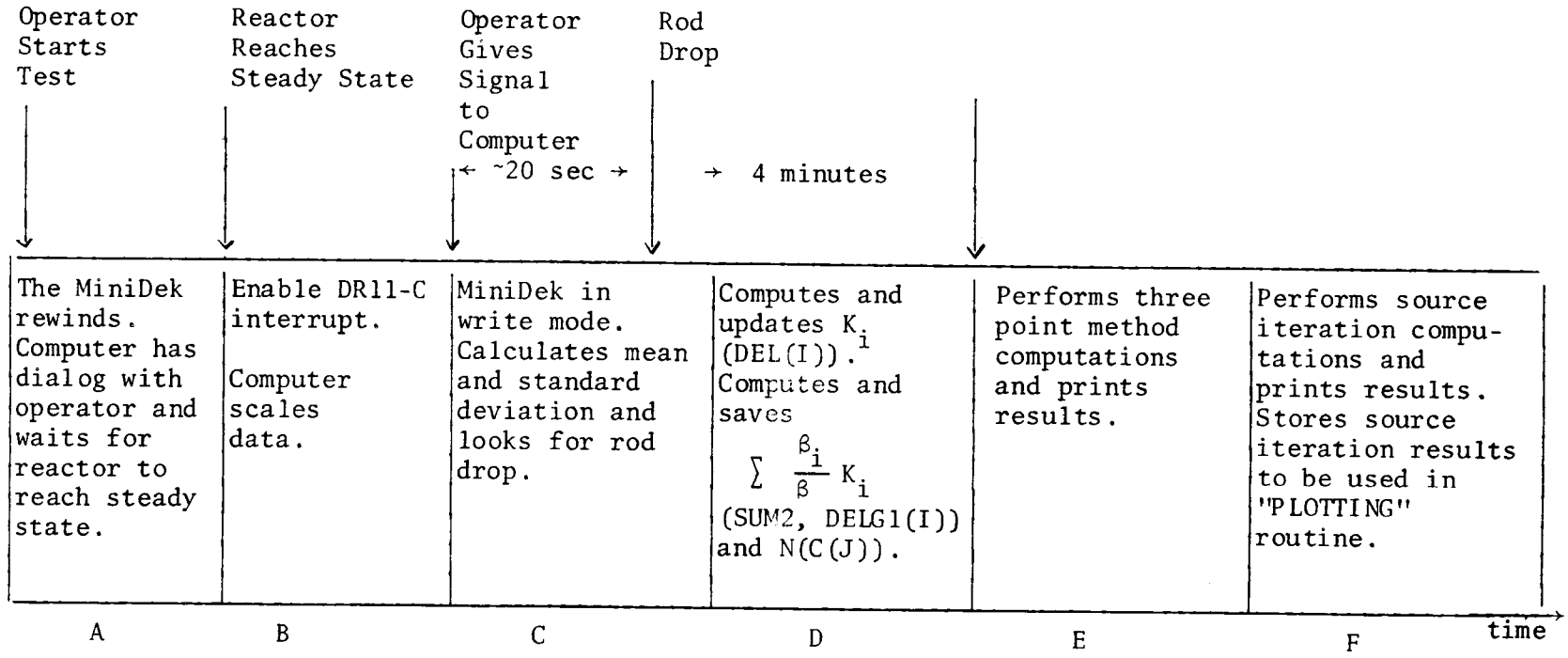

Figure 3. Timing diagram for the "WRITE" routine.

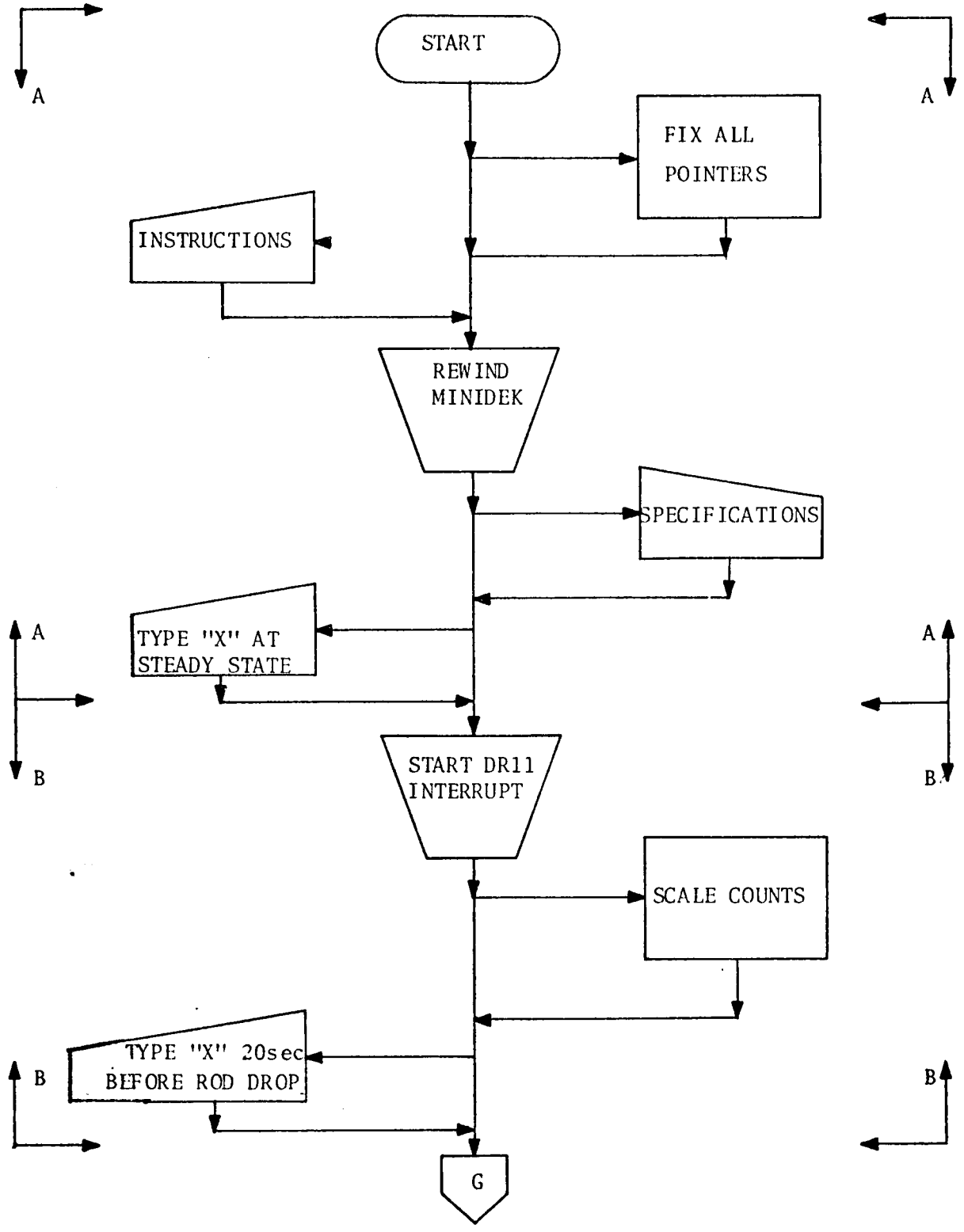

Figure 4. This module performs the dialog with the operator and scales the counts ("WRITE" routine).

about 6 minutes to rewind a 64K tape), while it is rewinding the teletype will print a series of messages requesting specifications about the particular test being performed. The last message will read: "TYPE AN 'X' WHEN REACTOR REACHES STEADY STATE." When the operator gives the signal, the DR11 interrupt is enabled and the counts of the neutrons taken by the up/down counters are scaled, storing the scale factor for each channel in locations D and D1 (Figures 3-B and 4). During the time the counts are scaled, the teletype will print "TYPE AN 'X' 20 SECONDS BEFORE ROD DROP." When the operator types the second "X," the program starts calculating the mean and standard deviation (Figures 3-C and 5).

Module "ROD" finds out when the rod drop occurred (Figures 3-C and 6). It compares the data from the channel chosen to perform the source iteration calculation with the mean (μ) minus the standard deviation (σ). If the data is greater than this upper limit, all previously stored data are thrown out and the process starts over again. If the data is less or equal than this upper limit, it is stored in memory until forty consecutive data points have been accumulated, and the decision is made that the rod has been dropped.

Module "FIT" (Figures 3-D and 7) returns to the first data point after the rod drop occurred and starts solving the inverse kinetics equations. This is done by the three point method for all seven channels and by the source iteration method for one channel. After four minutes, this calculation is terminated and all interrupt devices are cleared.

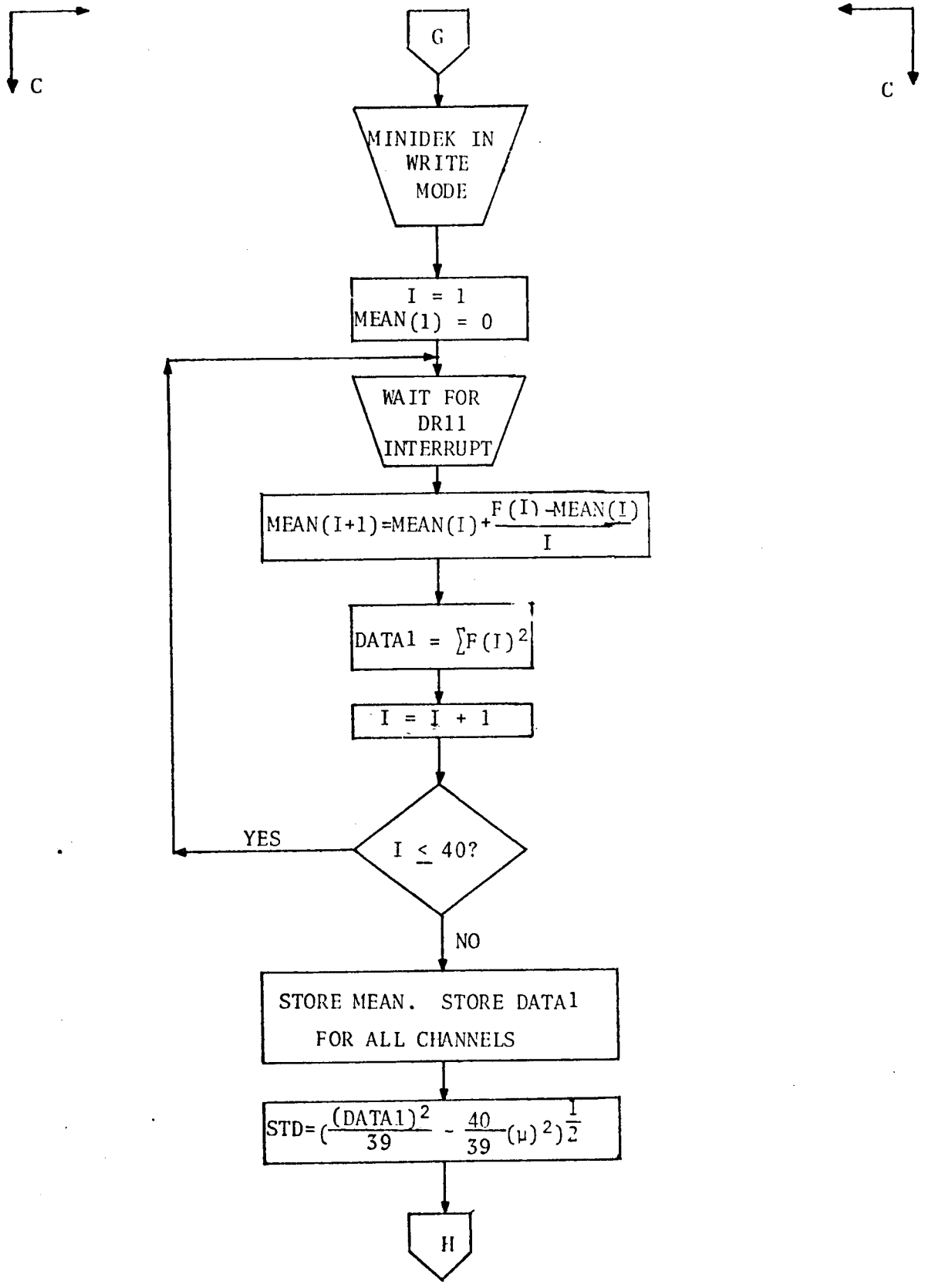

Figure 5. This module calculates the mean and standard deviation ("WRITE" routine).

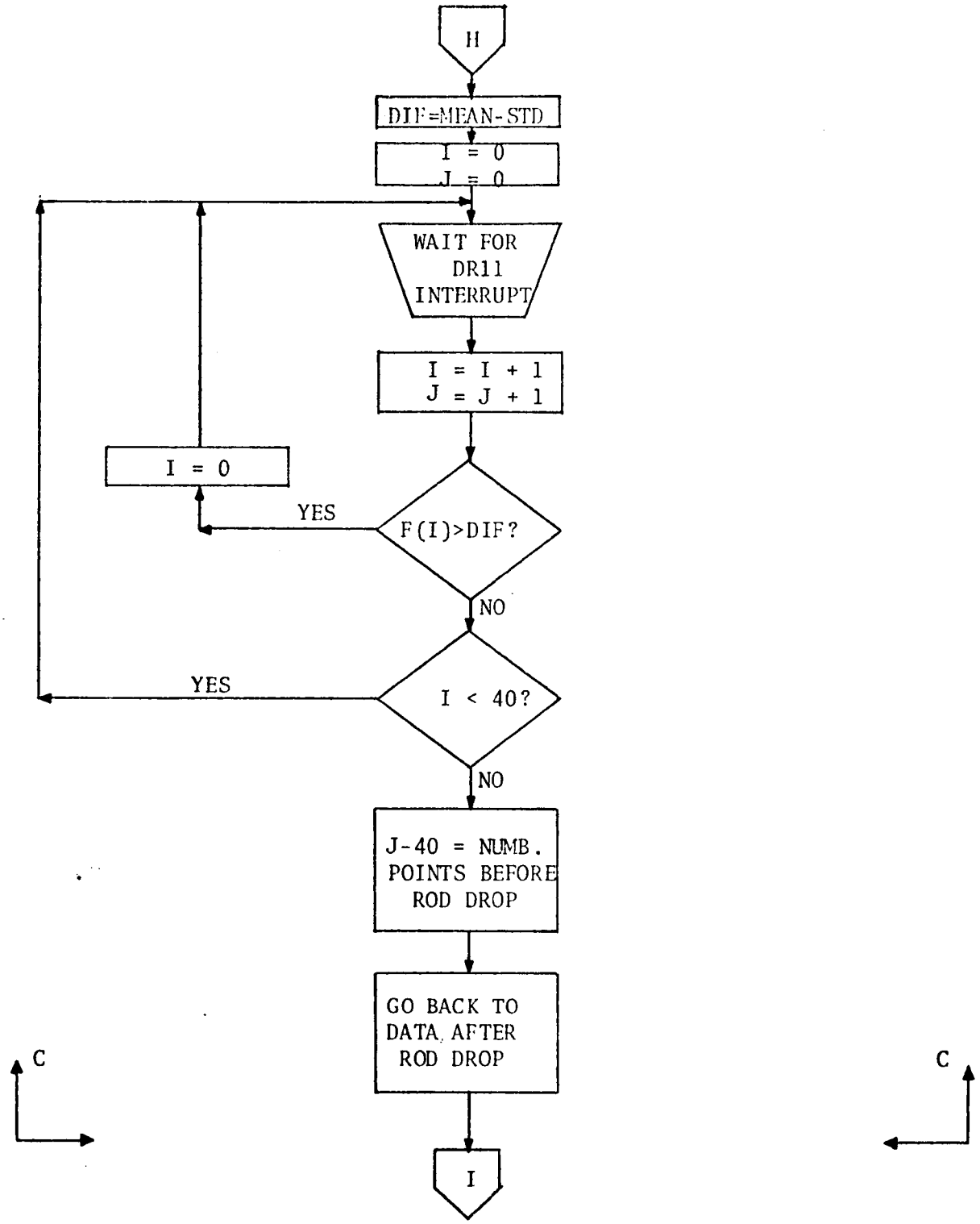

Figure 6. This module detects the rod drop ("WRITE" routine).

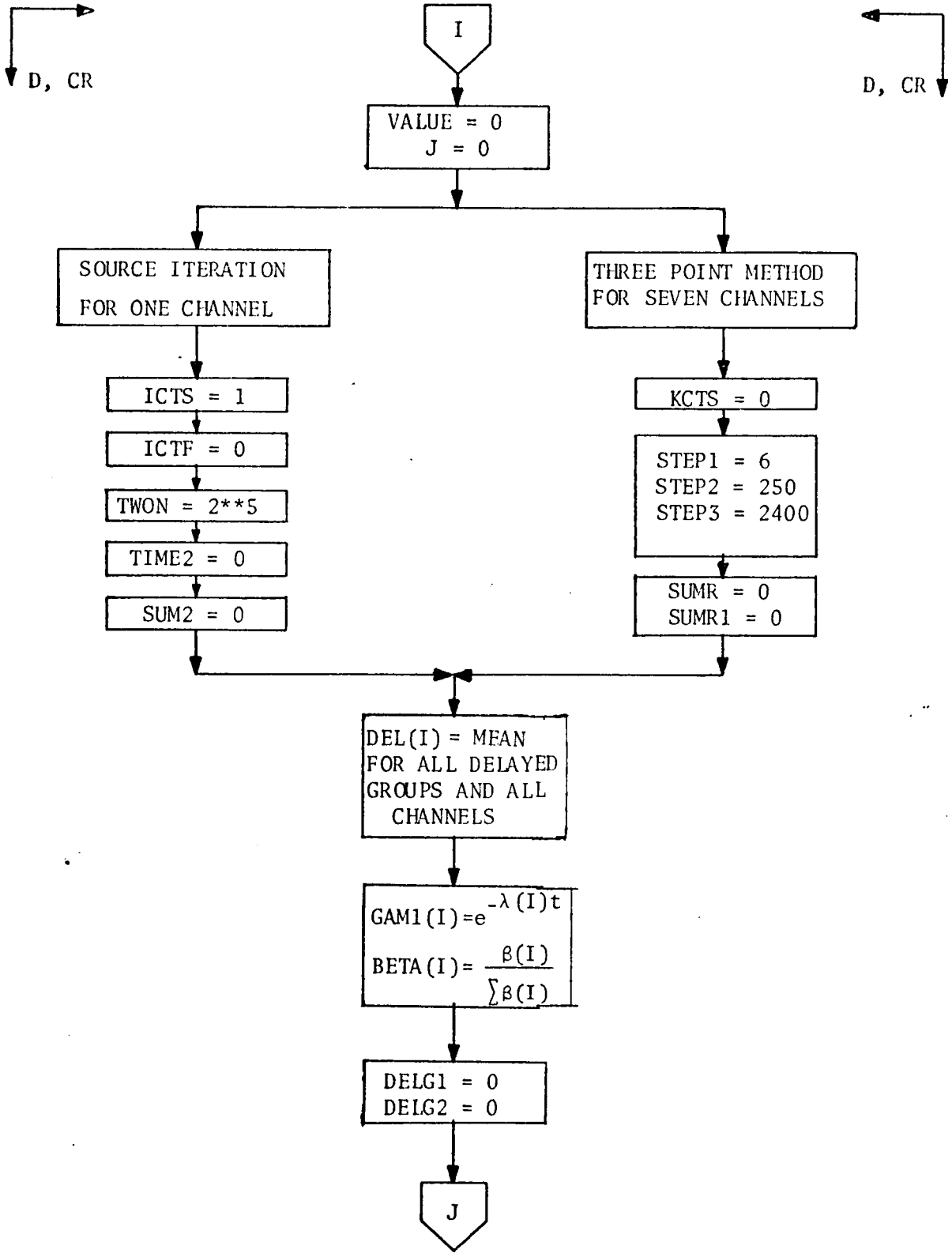

Figure 7. This module stores and processes data during the transient ("WRITE" and "READ" routines).

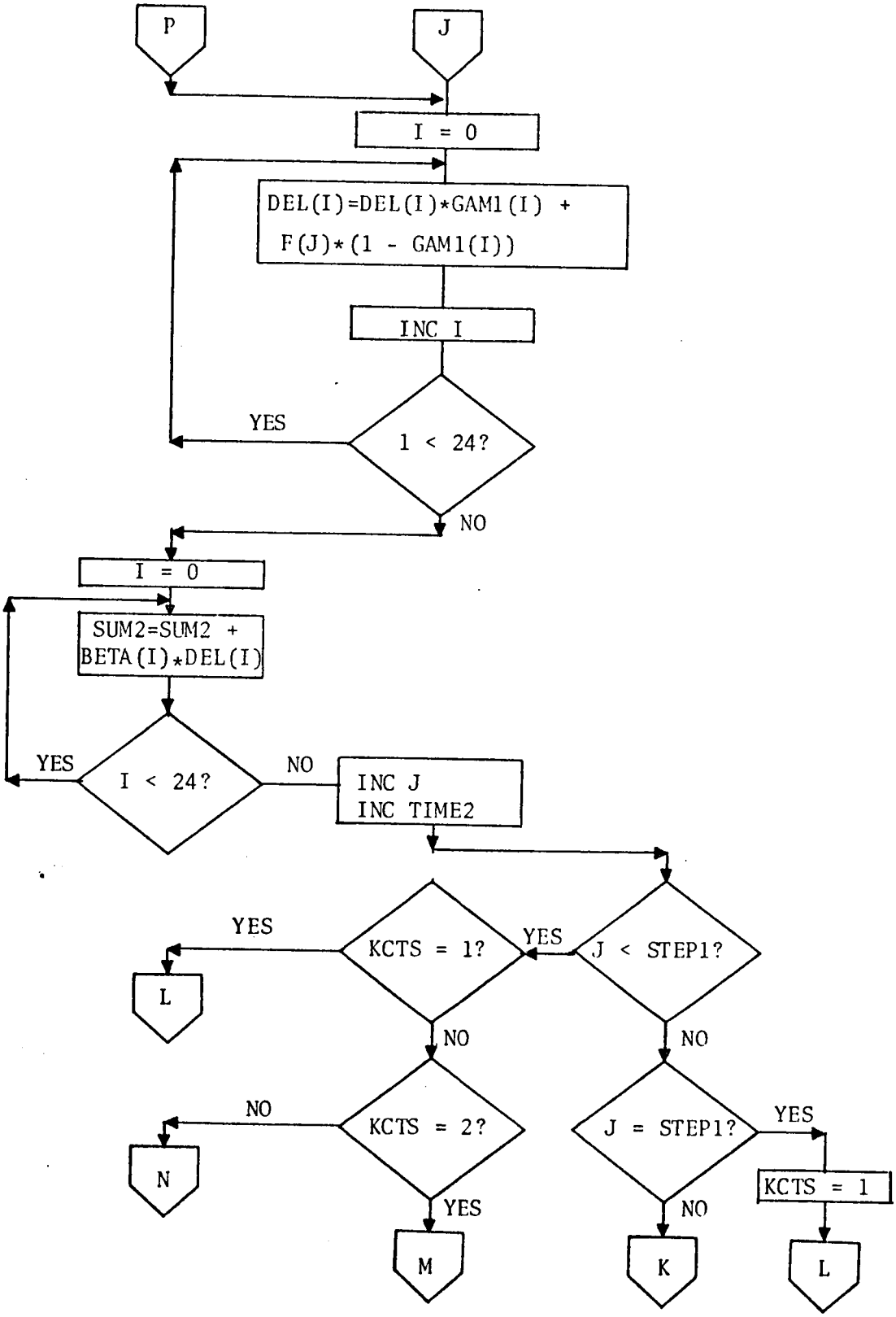

Figure 7 (continued)

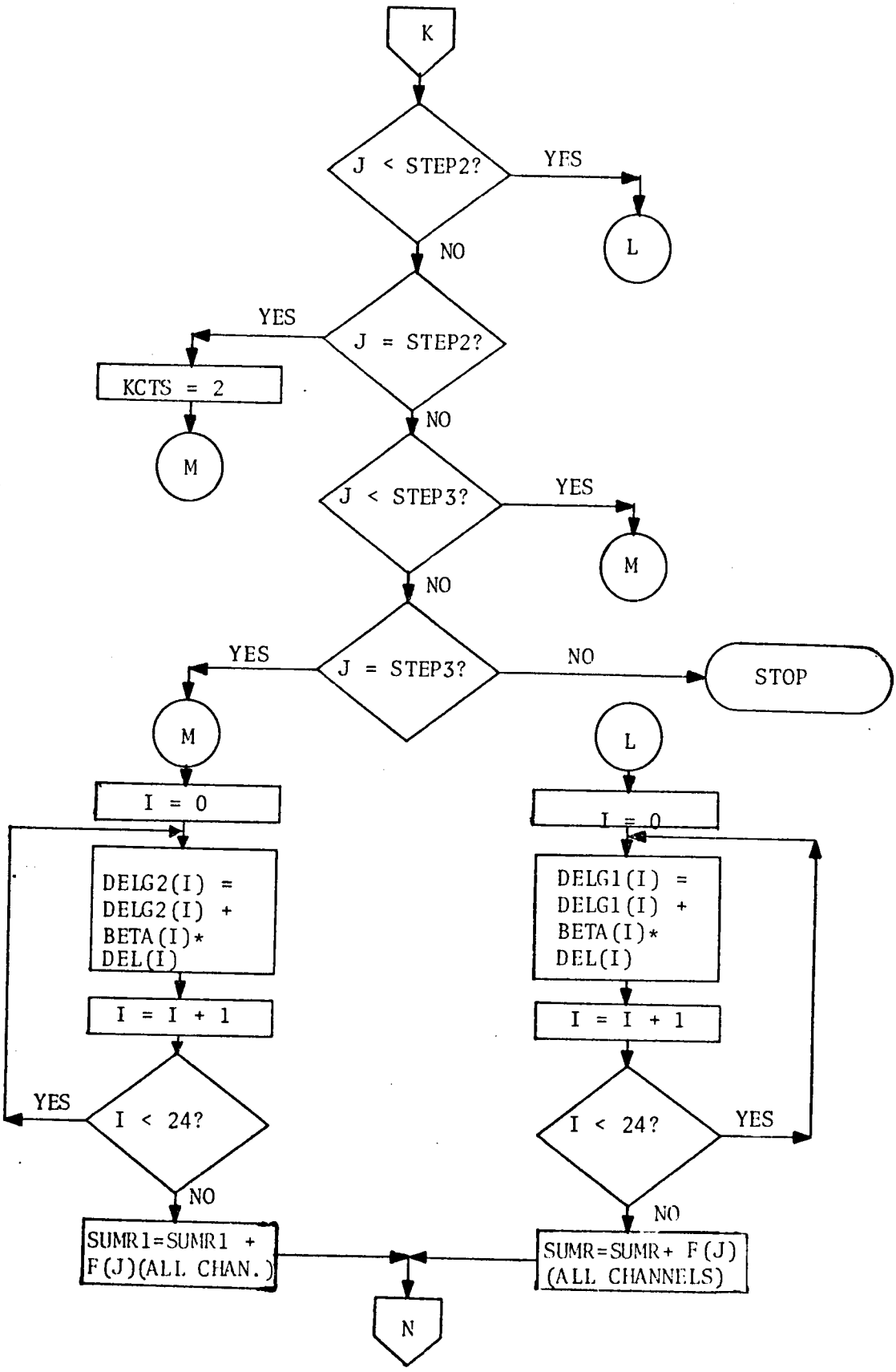

Figure 7 (continued)

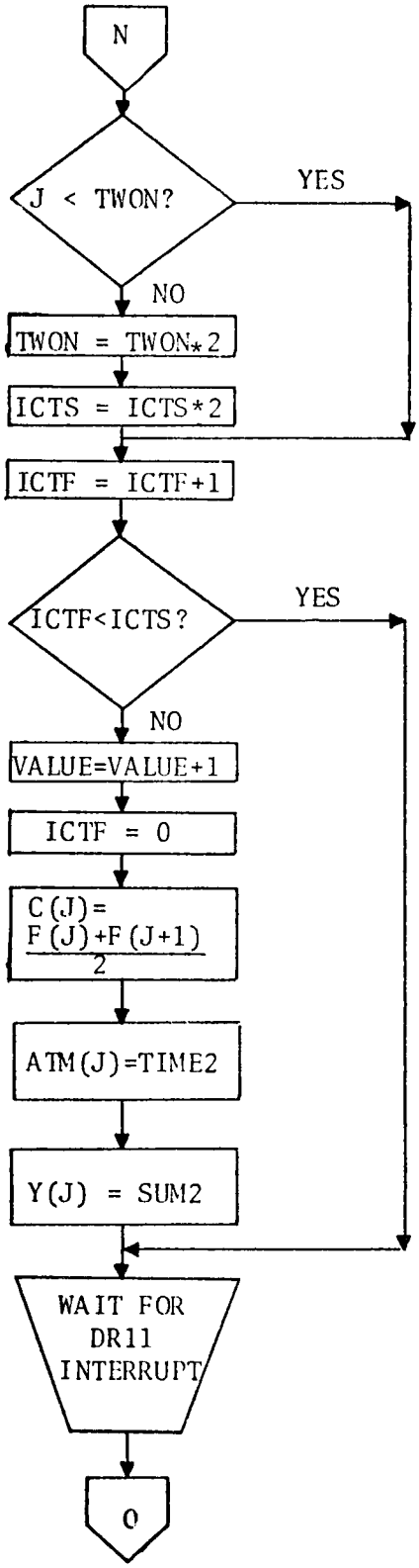

Figure 7 (continued)

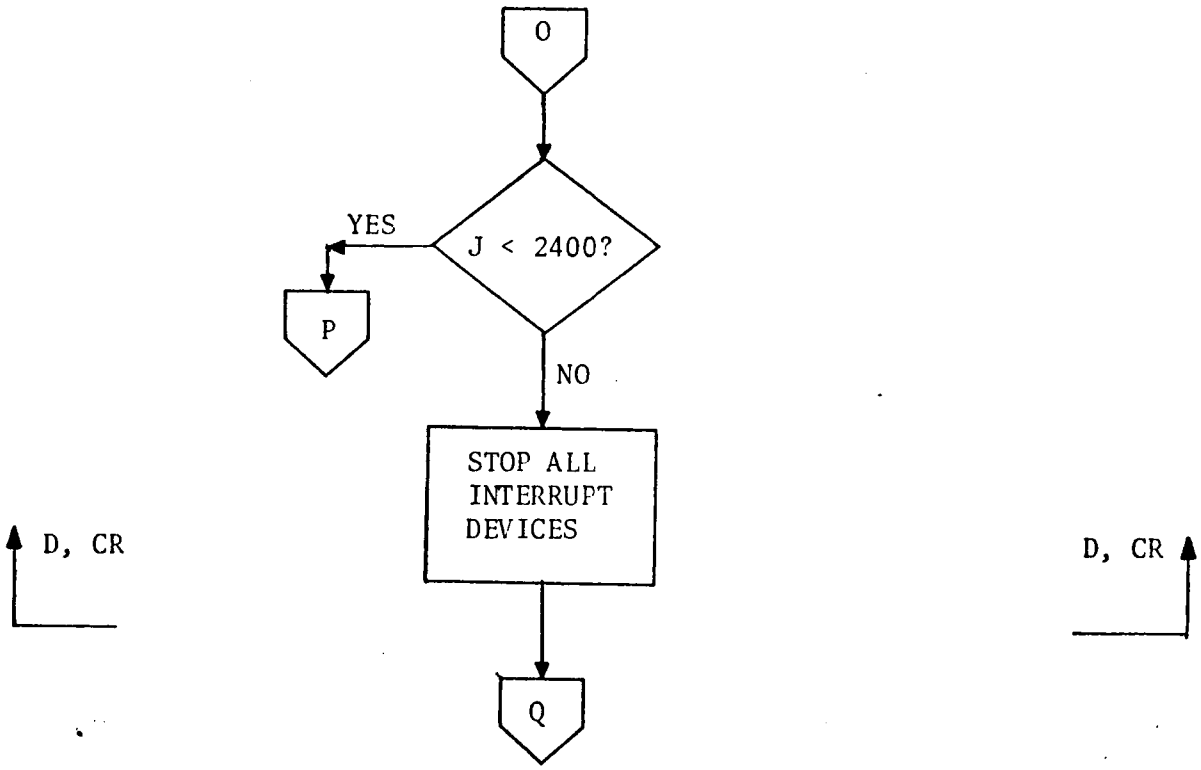

Figure 7 (continued)

Module "MATRIX" performs the three point method computations and module "RESULT" prints the results for all seven channels (Figure 3-E, page 22, and Figure 8).

The Floating-Point and Math Package for the PDP-11/20 (FPP-11) provided by Digital Equipment Corporation (DEC) was used for conversions and calculations of floating-point numbers. The use of this piece of software made the output of the test understandable without further off-line calculations. Since the program provided by DEC takes about 2K of memory locations, and several subroutines were not going to be used in the calculations, the original version was adjusted, and the unwanted subroutines were deleted. The new Floating-Point Package (FPP*) takes approximately 1K of memory locations.

The actual operations used are:

1. Floating-point operations: add, subtract, multiply, divide.
2. Calculation of transcendental functions: square root.
3. Operations to negate, move, and compare floating-point numbers.
4. Conversion to and from ASCII strings.

The starting address of the FPP* is 26600. That is, the first word of the EMT vector[4] at location 30 is set to 26600 and the second word of the trap vector, containing the status word, is set to 340 (i.e., priority level 7). The FPP* is used in "MATRIX" and in subsequent modules after the real time phase of the program has been accomplished.

Modules "ITT," "LIFT," AND "SOUEST" (Figures 3-F, 9, 10 and 11) perform the source iteration computation and store the results for subsequent plotting by the "PLOTTING" routine.

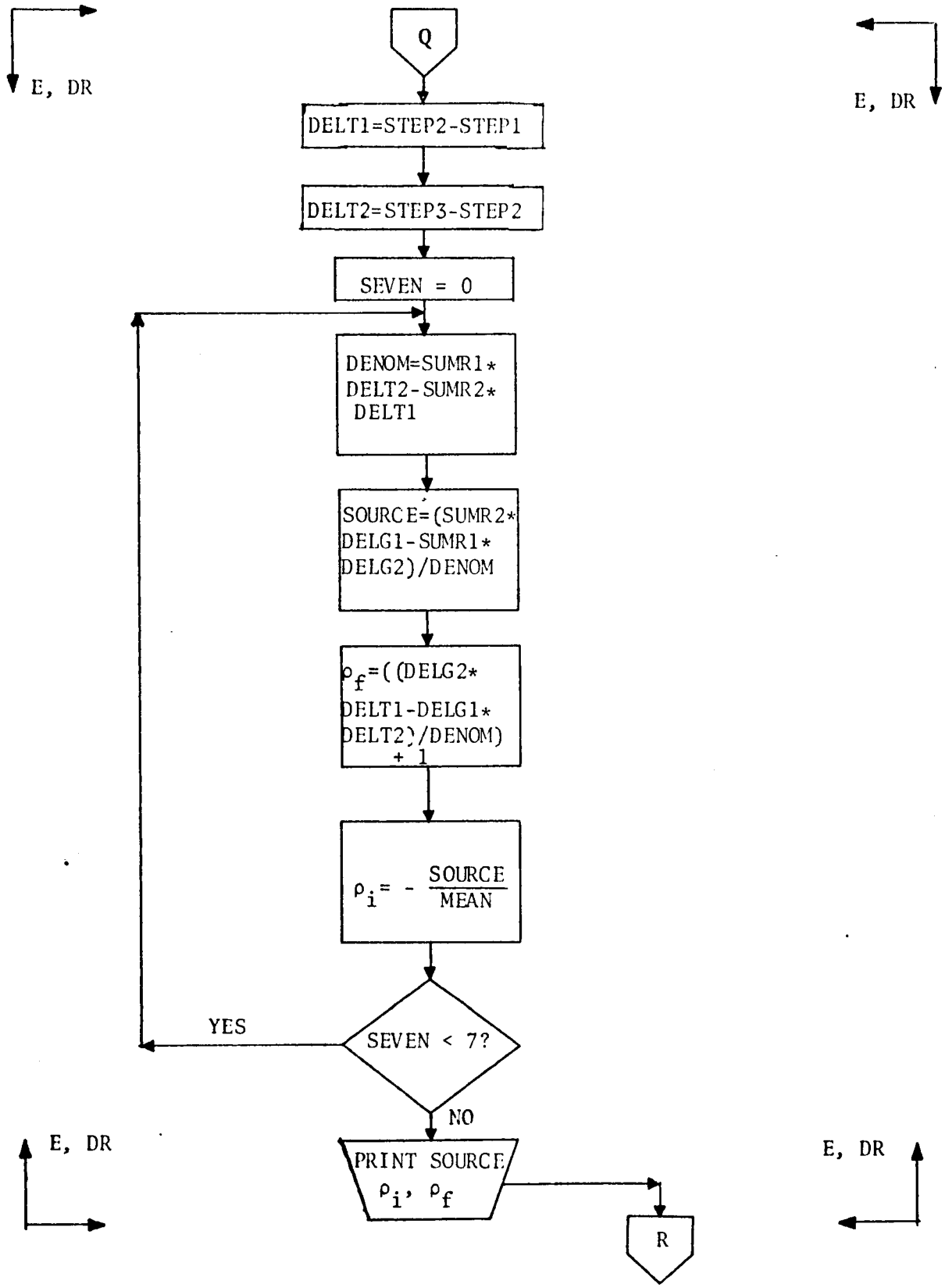

Figure 8. This module performs the three point method calculations ("WRITE" and "READ" routines).

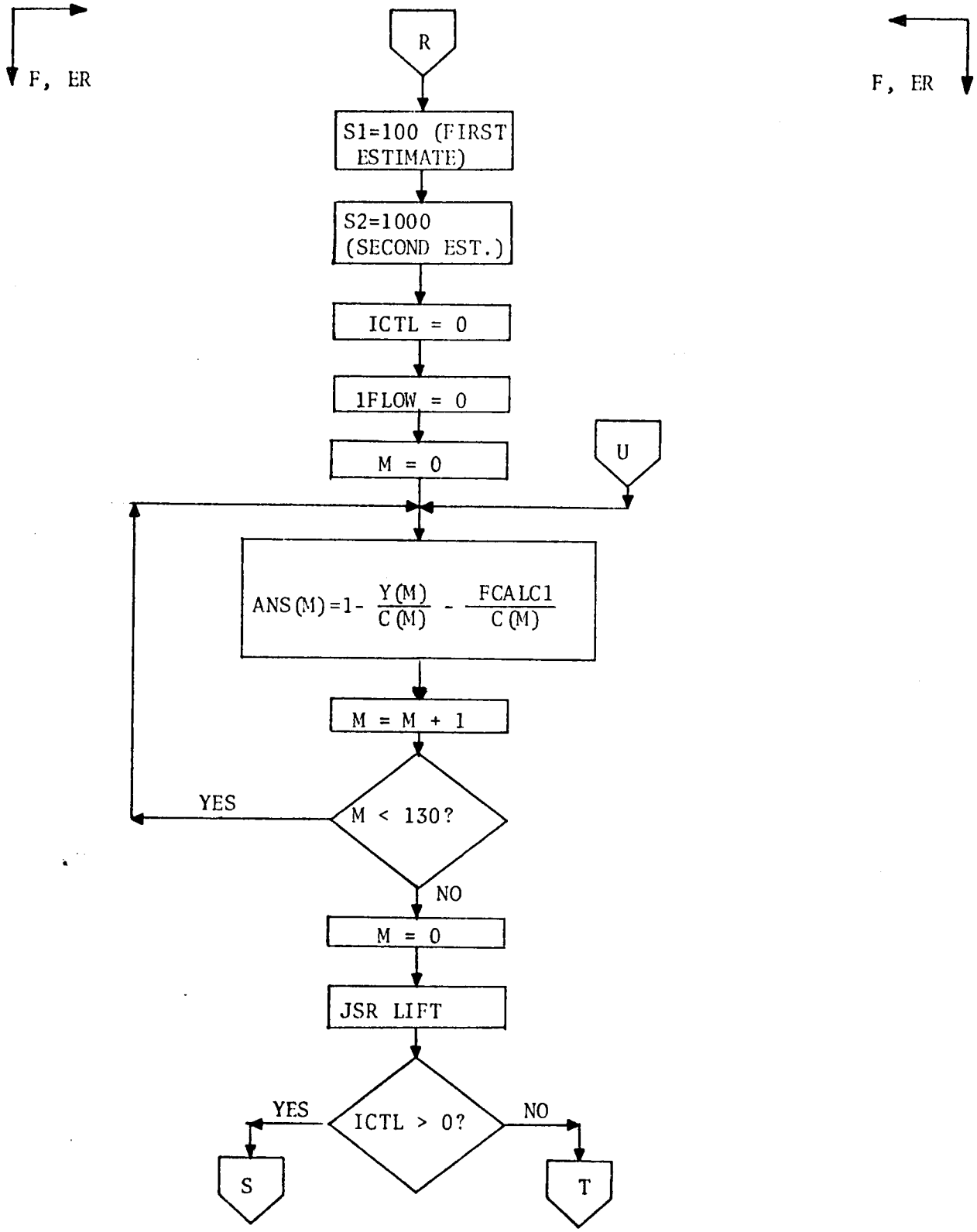

Figure 9. This module performs the source iteration calculations ("WRITE" and "READ" routines).

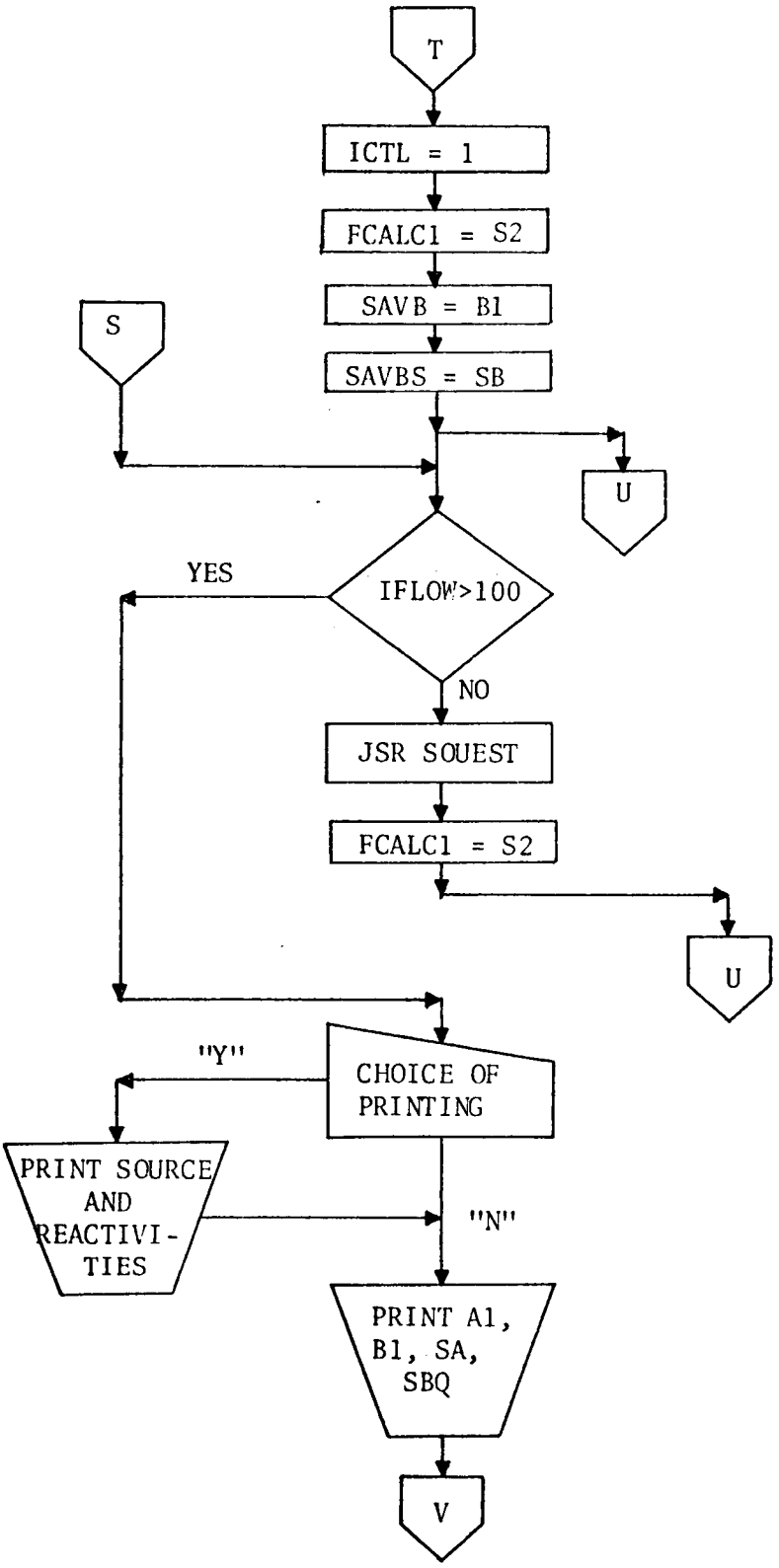

Figure 9 (continued)

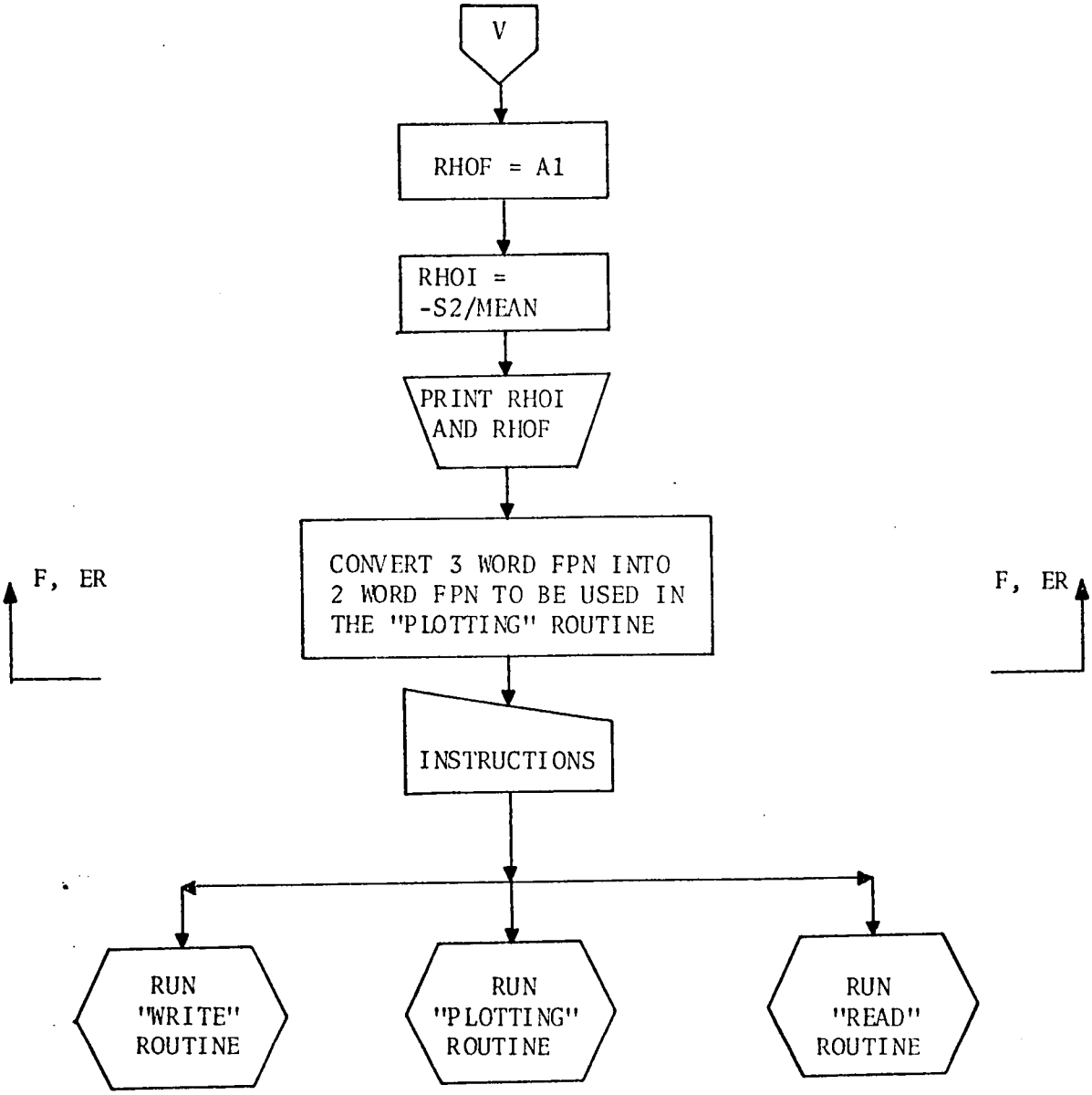

Figure 9 (continued)

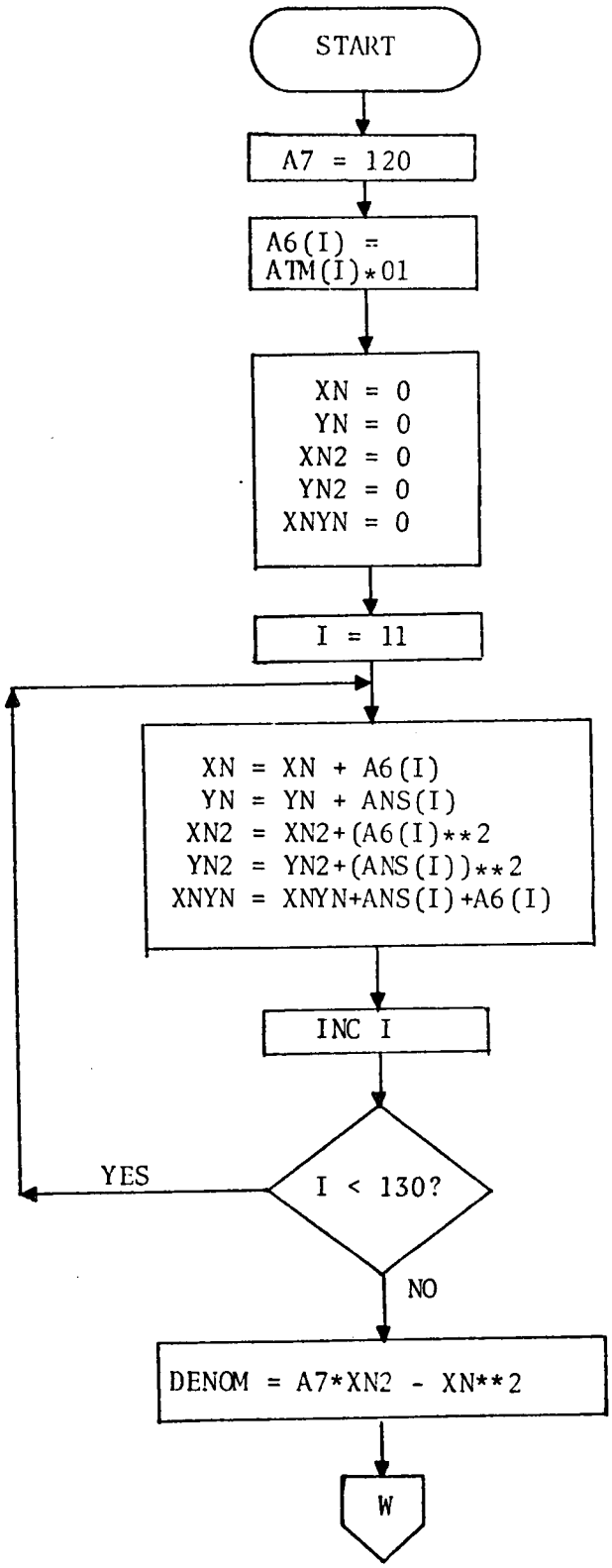

Figure 10. This module performs the least-square fit ("WRITE" and "READ" routines).

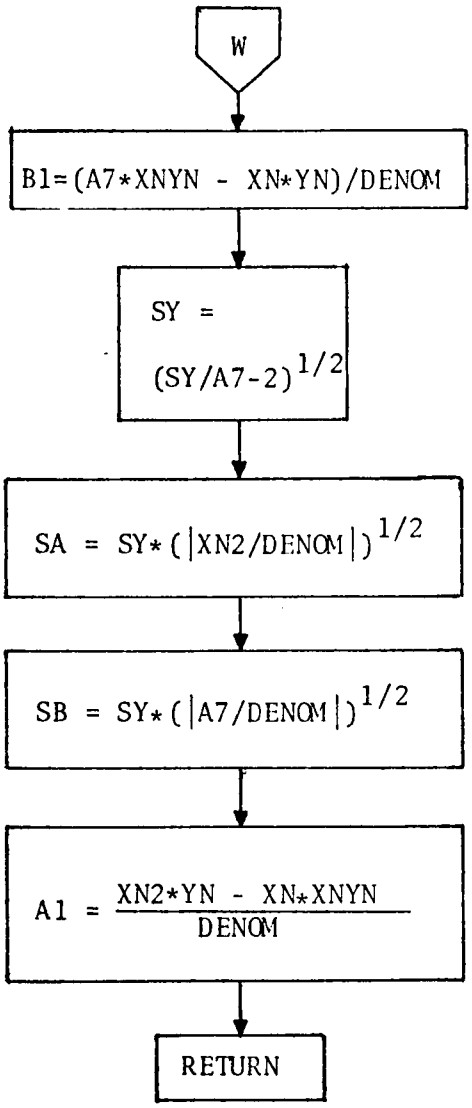

Figure 10 (continued)

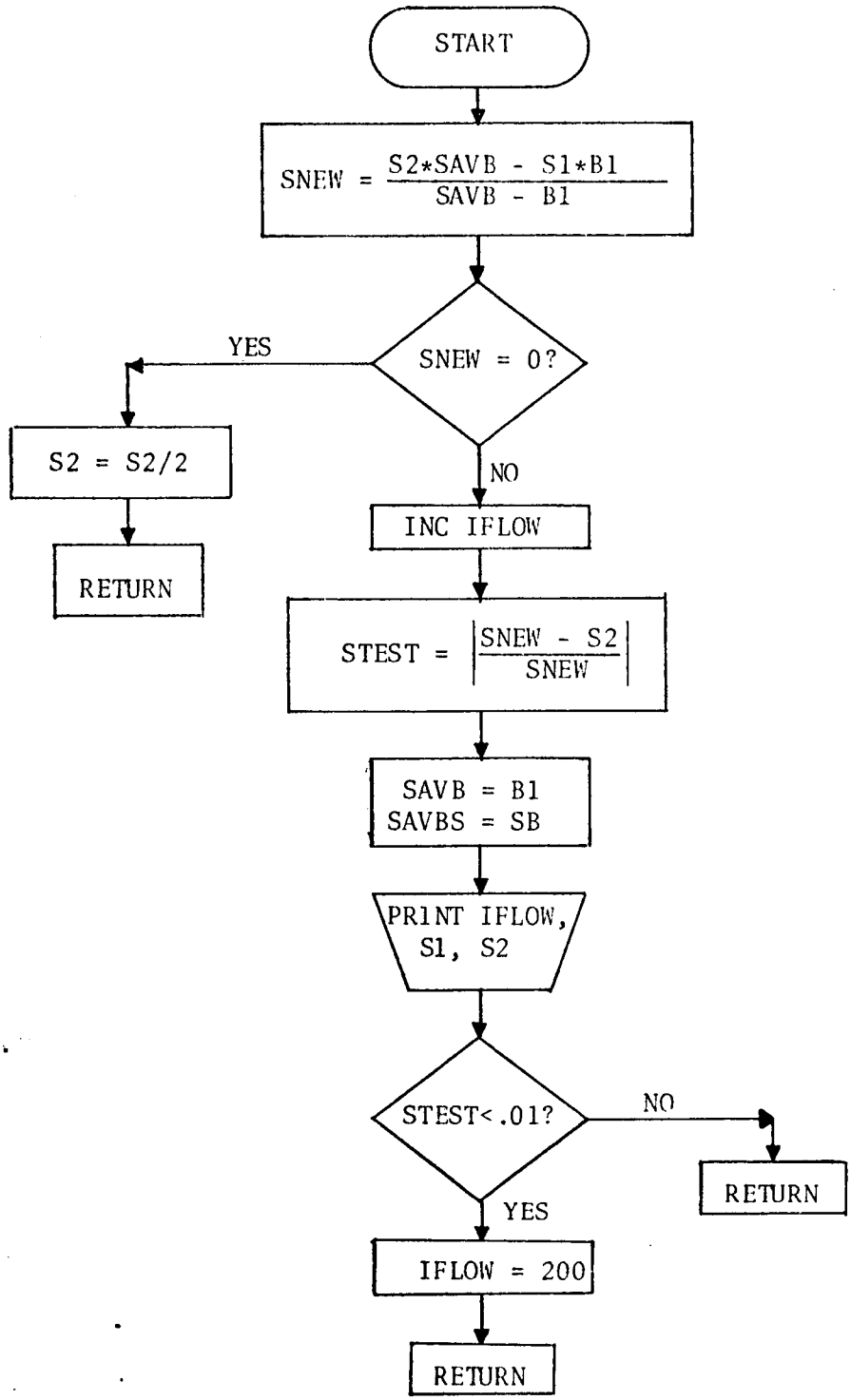

Figure 11. This module performs the convergence test ("WRITE" and "READ" routines).

III. "PLOTTING" ROUTINE

This routine was written by Kenneth Piety (University of Tennessee) and it is documented in Appendix C.

IV. "READ" ROUTINE

The interrupt device used in the program is the TP-1371 MiniDek cartridge magnetic tape. The TP-1371 MiniDek has hardware priority level 4 and software priority level 7. The processor's priority level is set to 0 at the beginning of the program to ensure that the interrupt device is granted access to the UNIBUS every time that it requests so. The teletype is not programmed to work with interrupts.

Module "MAIN" sets up the organization of the real time aspect of the program. After the first instructions are typed and the operator gives the start signal (typing of an "X"), the MiniDek will start rewinding and the teletype will print a series of messages requesting specifications about the particular test performed (Figures 12-AR and 13). Immediately after that, it will start calculating the same equations specified for the "WRITE" routine (Figures 12, 14, 15, 16 and Figure 7 pages 27-31; also, Figures 8-11, pages 33-39). When the MiniDek finishes reading the data, the device interrupt is disabled.

V. STORAGE LOGIC

Two circular buffers and an eight-word buffer were selected to store incoming data. The first circular buffer, used to store data for

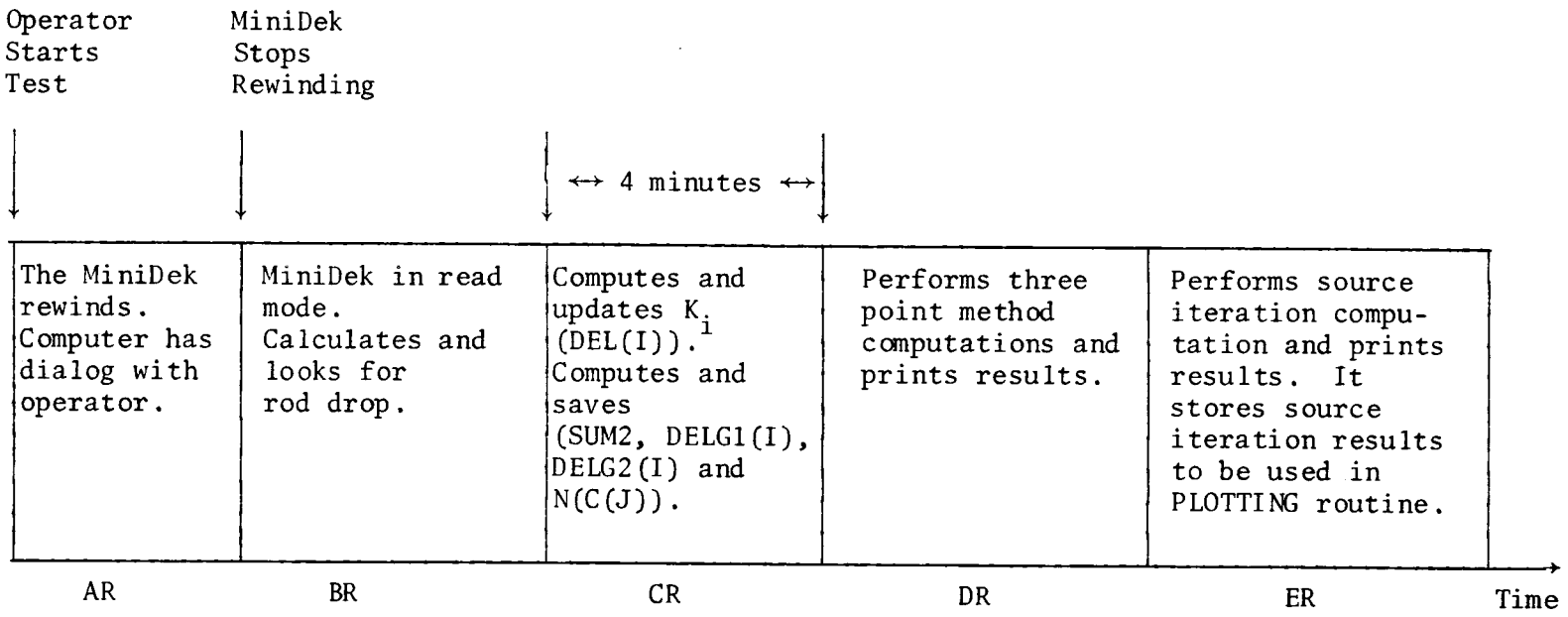

Figure 12. Timing diagram for the "READ" routine.

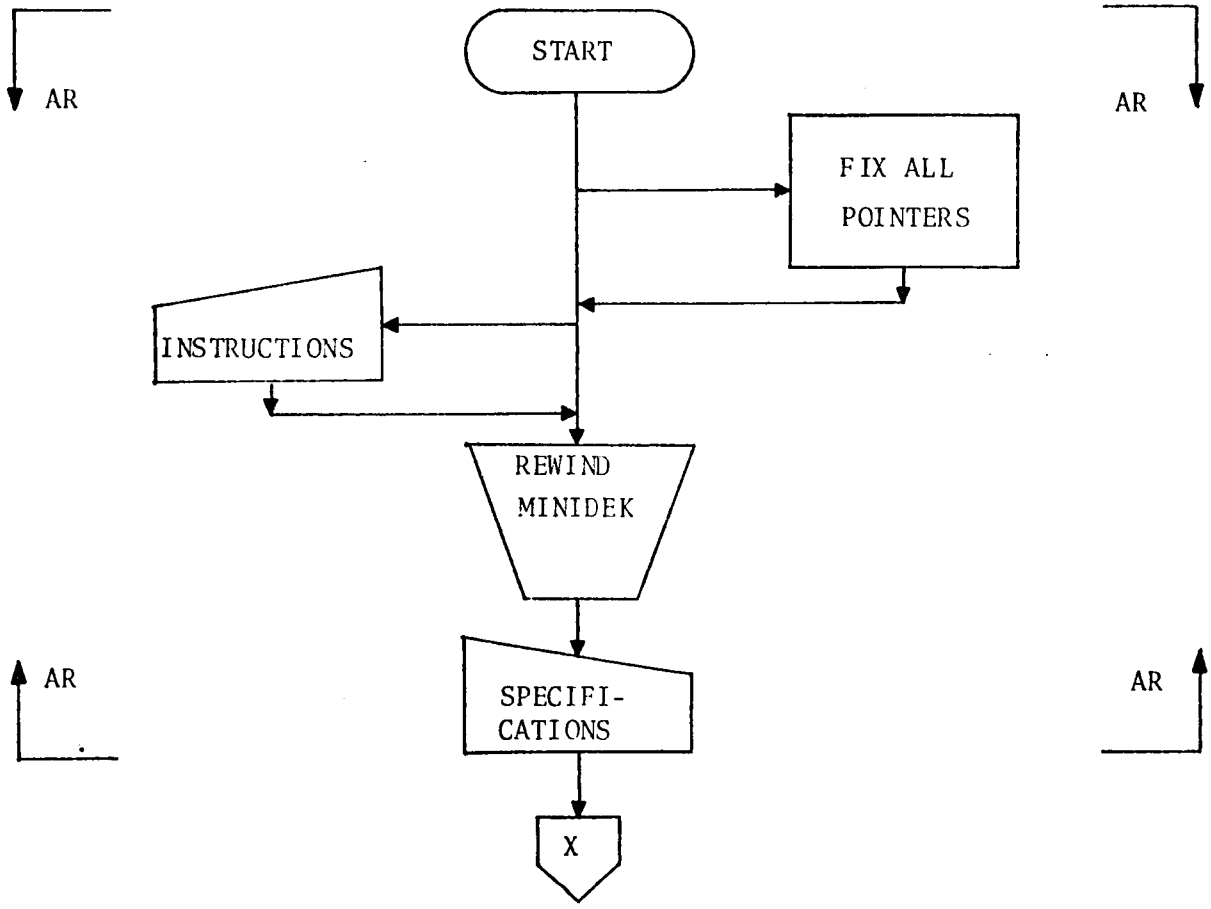

Figure 13. This module performs the dialog with operator ("READ" routine).

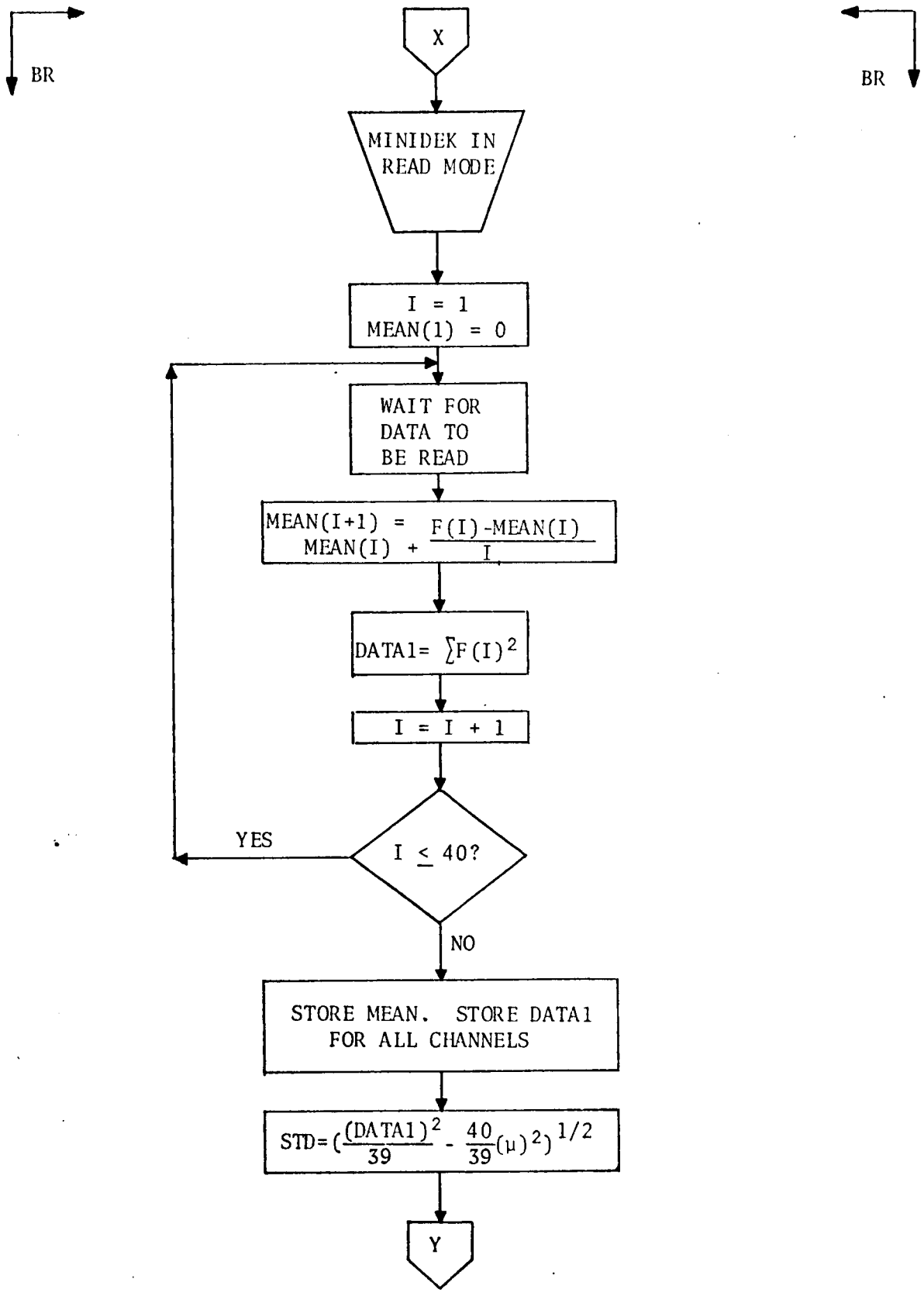

Figure 14. This module calculates the mean and standard deviation ("READ" routine).

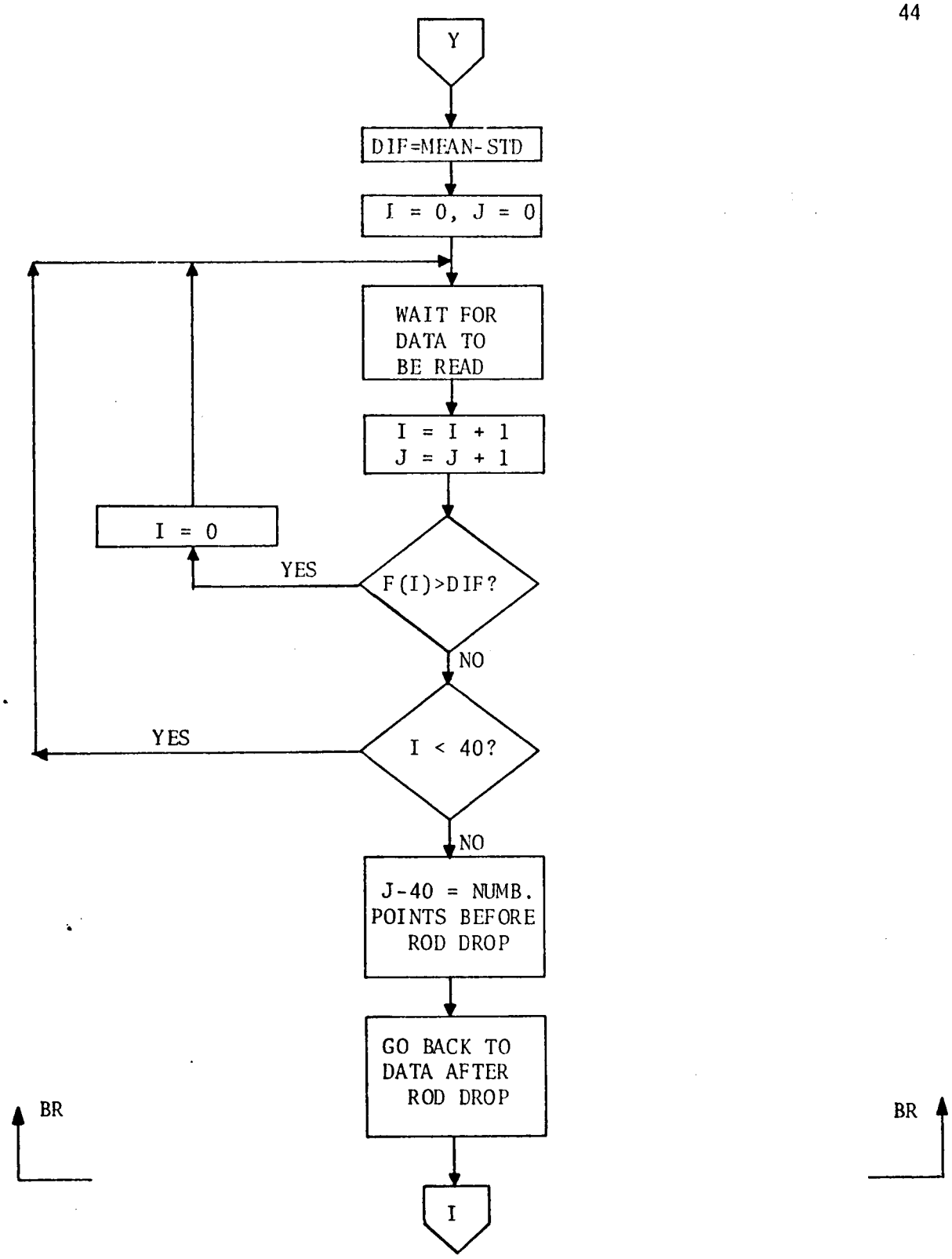

Figure 15. This module detects the rod drop ("READ" routine).

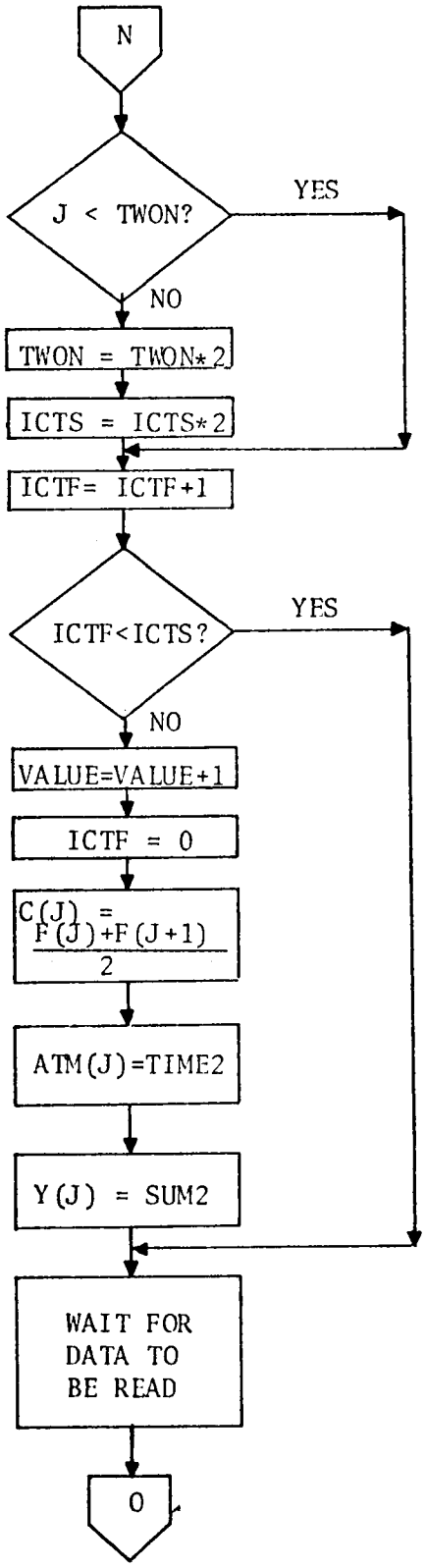

Figure 16. This module stores and processes data during the transient ("READ" routine).

the source iteration calculations, starts at location 2100. This buffer is 40-words long, and its length was arbitrarily chosen as a convenient factor of 2400 (number of data points read). The second circular buffer, used to store data for the three point method calculations, starts at location 1000. This buffer is 280-words long, allowing a 40-word buffer for each channel. The third buffer, used to store a complete reading from the DR11-C plus the checksum (eight words) starts at location 652.

Source iteration method. At the start, 40 continuous pieces of data are stored; if all of their values are less than the mean (μ) minus the standard deviation (σ), the rod is assumed to have dropped at the first data point considered. To start the calculation of the inverse kinetics equations, the program goes back to the first data after the rod drop and starts calculating with the first piece of data. Once this first piece of data is calculated, it is discarded and this location is used to store the new data coming in. Then the calculation is performed with the next piece of data, and again, once it is used, it is discarded (Figure 17). When the end of the buffer is reached, the program goes back to the beginning of the buffer and it continues with the same logic (Figure 18).

Three point method. The manipulation of this buffer is similar to that used above for the source iteration method.

Storage of counts. Module "FIT" sets the logic to store the counts that are going to be used for the solution of the inverse kinetics

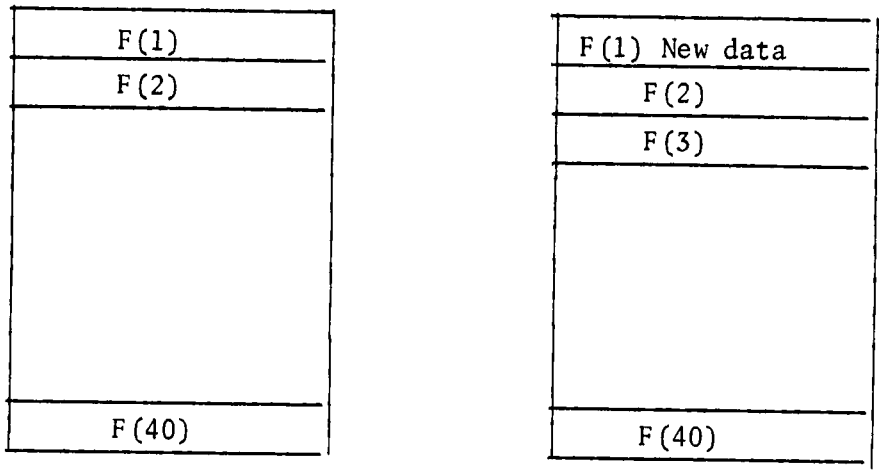

Figure 17. Storage logic; beginning of buffer.

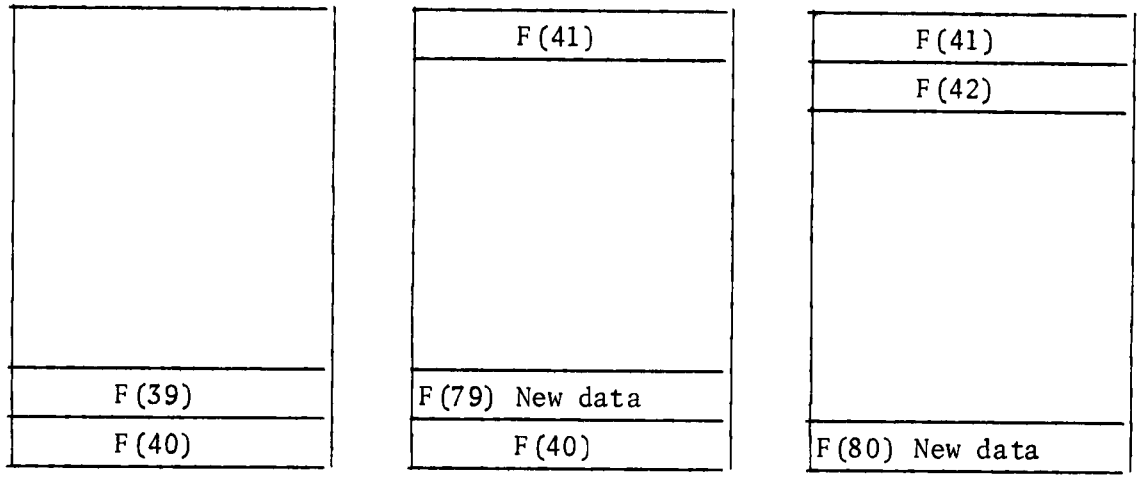

Figure 18. Storage logic; end of buffer.

equations. Of the 2400 points read, only 130 points are stored. The logic to store these points is determined on a logarithmic base, taking into account that the data read just after the rod drop would be more significant for the calculation than the data received after a minute or so (Table I, page 10).

VI. PERMANENT STORAGE OF DATA

The permanent storage of data (on tape cartridge) is accomplished by the "WRITE" routine. After the scaling of the counts is resumed, the MiniDek is set in the write mode (Figure 3-C, page 22).

There are eight bytes of zeroes at the beginning of the tape, and immediately after that the first block of data is recorded. The data is written in blocks of eight words, one word for each channel and one word for the checksum. Since the DR11 interrupts every 0.1 sec, there is time to write the same data twice, in the event an error is introduced in one block. That is, between two interrupts of the DR11, the MiniDek writes eight words of data, including the checksum, eight bytes of zeroes between blocks of data, and again it repeats the same eight words of data. After this is accomplished, it starts writing zeroes until the DR11 interrupts again, and the whole procedure is repeated.

Approximately twenty seconds before the rod drop, the MiniDek writes every single data point, and it stops recording when the transient has terminated (Figure 3-C and D, page 22).

The rod drop is decided once forty data points have been read, and this means that at this moment the MiniDek is ahead of the calculating process. This feature allows us to write forty extra data points at the end of the tape, in case they are needed when the data is recovered.

CHAPTER V

RESULTS

Figure 19 shows results of a typical rod drop obtained with data recorded by others on analog tape at the Southwestern Experimental Fast Oxide Reactor.[4] (Channels 5 and 6 were inoperable at this time.) The results agreed with the expected values of ρ_f^* (-2.29) and ρ_i^* (-1.15).

Figure 20 shows the behavior of the reactivity during the transient. This plot, as well as Figure 21, were obtained with a 7004B X-Y plotter made by Hewlett-Packard. Figure 21 compares experimental and calculated values for the counts versus time and demonstrates excellent agreement.

For all cases considered to date, the results obtained with this real time system have agreed with those obtained by other means.

```
ANSWERS BY USE OF 3 POINT  METHOD
INITIAL TIME AFTER DROP= .6ØØØØØØØE  1
SECOND TIME POINT= .25ØØØØØØE  3
FINAL TIME POINT= .24ØØØØØØE  4
SOURCE EST= .1Ø313971E  6 (Channel 1)
 .1Ø313732E  6 (Channel 2)
 .1Ø313957E  6 (Channel 3)
 .1Ø3138Ø7E  6 (Channel 4)
 .52475554E  4 (Channel 5)
 .52474756E  4 (Channel 6)
 .1Ø3Ø8217E  6 (Channel 7)
FINAL REACTIVITY=-.22781714E  1
-.2278121ØE  1
-.22781685E  1
-.22781361E  1
-.396Ø6647E  Ø
-.396Ø5981E  Ø
-.22758126E  1
INITIAL REACTIVITY=-.1177Ø178E  1
-.11769Ø4E  1
-.1177Ø161E  1
-.1176999ØE  1
-.23953784E  Ø
-.93990248E  Ø
-.46158952E  1
DO YOU DESIRE TO PRINT REACTIVITIES?
REACT FROM SOURCE CALC
-.11877175E  1 (ρ*1)
-.12342376E  1 (ρ*2)
-.1382Ø492E  1
-.16836147E  1
-.2Ø51Ø771E  1
-.226Ø3755E  1
-.22995142E  1
-.22837692E  1
-.22772683E  1
-.2278937ØE  1
     .
     .
     .
-.2269Ø99ØE  1
-.22692448E  1
-.22685924E  1
-.22631Ø98E  1
-.229Ø6841E  1
-.22822839E  1
-.22584533E  1
-.22532285E  1
-.22977785E  1 (ρ*130)
```

Channel for source iteration: 1
Expected values: $\rho_f^* = -2.29$

$\rho_i^* = -1.15$

Figure 19. Results of a typical rod drop experiment. (Channels 5 and 6 were not scaling properly.)

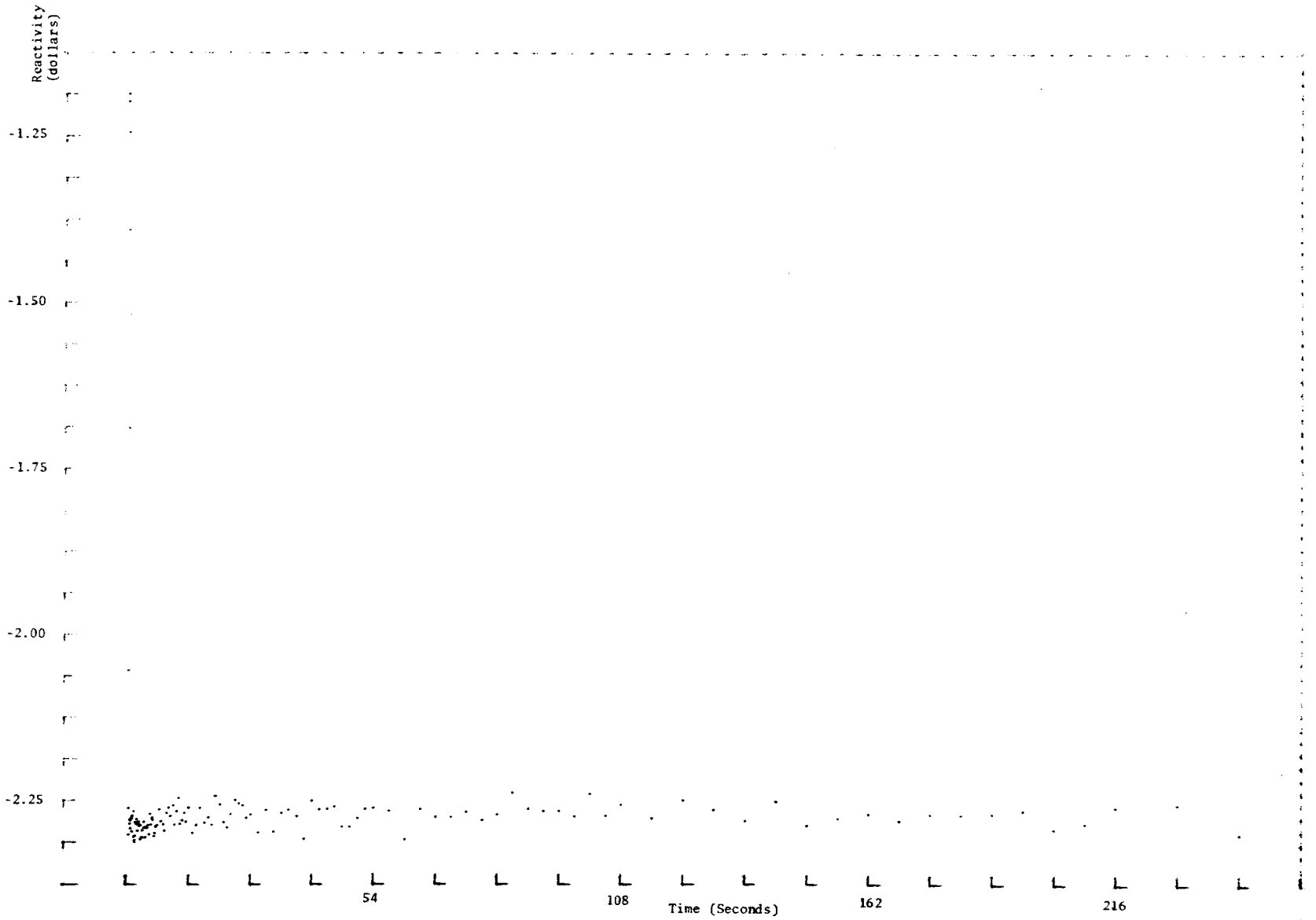

Figure 20. Reactivity versus time.

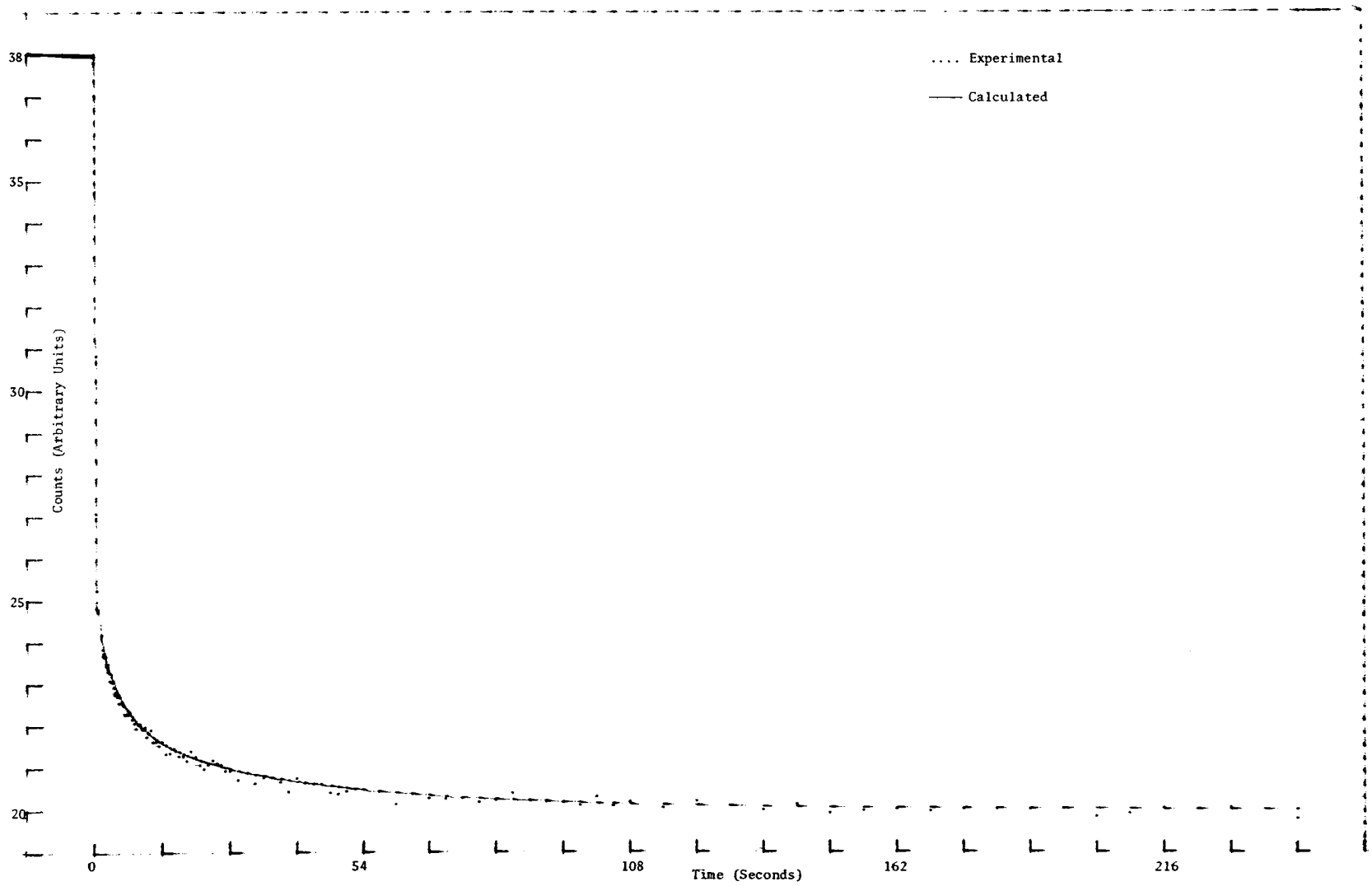

Figure 21. Counts versus time.

CHAPTER VI

CONCLUSIONS AND RECOMMENDATIONS

The requirements for the system listed in Chapter I were fulfilled, and the performance of the equipment was properly tested in different environmental situations. The PDP-11/20 computer proved to be an ideal piece of equipment to be transported and installed as a recording and processing element for the real time test. The interface worked well and the storage unit, the MiniDek, performed according to specifications. When the data was recovered and processed, the results agreed with the real time experiments, giving a proof of the instrument's recording fidelity.

The two methods used to solve the inverse kinetics equations produced accurate results when the simulated data was used. However, when real data was analyzed, detector counting losses were found to be important. Because of this it is recommended that a counting loss correction factor be applied to the data before processing. It was also observed that the three point method was more accurate than the source iteration method and, since it is also faster, we recommend that the source iteration method be eliminated. In order to obtain point values for the reactivity, the source calculated for a preselected channel by the three point method can be used to solve Equation (1.11) on page 8 using the stored data from that sensor.

The techniques used in this thesis can be extended to provide the reactor operator with instantaneous values of reactivity once a value for the source has been obtained. The operator can determine the source strength from a single rod drop and then using this technique follow changes in reactivity due to other causes.

LIST OF REFERENCES

LIST OF REFERENCES

1. Weaver, Lynn E., Reactor Dynamics and Control, American Elsevier Publishing Company, Inc., New York, 1968.

2. Allen, J. W., J. C. Robinson, N. J. Ackerman, Jr., "Statistical Errors in Subcritical Reactivity Inferred from Inverse Kinetics Rod-Drop Measurements Using the Three-Point Method," U.S.A.E.C. Report ORNL-TM-4101. (To be published.)

3. Robinson, J. C., Nuclear Engineering Department, The University of Tennessee, personal communication.

4. Buhl, A. R., N. J. Ackermann, Jr., R. C. Kryter, and J. C. Robinson, "Subcriticality Monitoring System Evaluation in SEFOR," ORNL-TM-3716 (1973).

5. "PDP-11 Paper Tape Software Programming Handbook", Digital Equipment Corporation, Maynard, Massachusetts, 1970.

6. Glasstone, Samuel, Alexander Sesonske, Nuclear Reactor Engineering, Van Nostrand Reinhold Company, New York, 1967.

7. Lapidus, Leon, Digital Computation for Chemical Engineers, McGraw-Hill Book Company, York, Pennsylvania, 1962.

8. Schultz, M. A., Control of Nuclear Reactors and Power Plants, McGraw-Hill Book Company, New York, 1955.

9. Walker, C. S., "Reactor Controls", ORNL CF 59-6-90, 3-19-64.

APPENDIXES

APPENDIX A

OPERATING INSTRUCTIONS

1. Press the ENABLE/HALT switch to HALT.

2. Load 37744 into the Switch Register, press LOAD ADDR. Place the MiniDek Absolute Bin Loader (TSE-1371-11-001C-PO) on the reader (use special leader code). Make sure the ENABLE/HALT switch is ENABLE. Press START. The above procedure will load the routine that reads a program from the MiniDek.

3. Press the ENABLE/HALT switch to HALT.

4. Load 37500 into the Switch Register, press LOAD ADDR. Insert the 8K cartridge and select proper track. Make sure the ENABLE/HALT switch is ENABLE. Press START. The tape should start rewinding and after a while the first message of the program will be printed on the teletype.

Track 1. After first message is printed, type "X" when ready. Immediately after typing "X", the tape should start rewinding and a series of messages will be printed on the teletype. When answering this particular dialog, note that typing "LINE FEED" will issue a new message. Make sure to answer everything you need before typing "LINE FEED". Typing "RETURN" will not issue a new message. Type "X" when reactor reaches steady state. Twenty seconds before the rod is dropped, an "X" should be typed again. The program will process the data for about 4 minutes and immediately after that it will start printing the answers.

After typing the answers for the three point method, a message saying "DO YOU DESIRE TO PRINT THE REACTIVITIES?" will be printed on the teletype. Type "Y" if your answer is affirmative and type "N" otherwise. When the program stops printing, the message on the teletype will then help you proceed to other tasks.

Track 2. See Appendix C.

Track 3. After the first message is printed, type an "X" when ready. Immediately after that, the tape will start rewinding and a series of messages that expect answers will be printed on the teletype. Note that only a LINE FEED will produce a new message. When the tape stops rewinding, the program will read and process for about four minutes and immediately after that, it will start printing the answers. When the message "DO YOU DESIRE TO PRINT THE REACTIVITIES?" appears on the teletype, type "Y" if your answer is affirmative and type "N" otherwise. When the program stops printing, the message on the teletype will then help you proceed to other tasks.

APPENDIX B

INTERFACE SCHEMATICS

The hardware schematics for all seven channels and the logic which controls all the circuits are presented in this section (Figures 22, 23, 24, and 25). The hardware description is discussed in Chapter III.

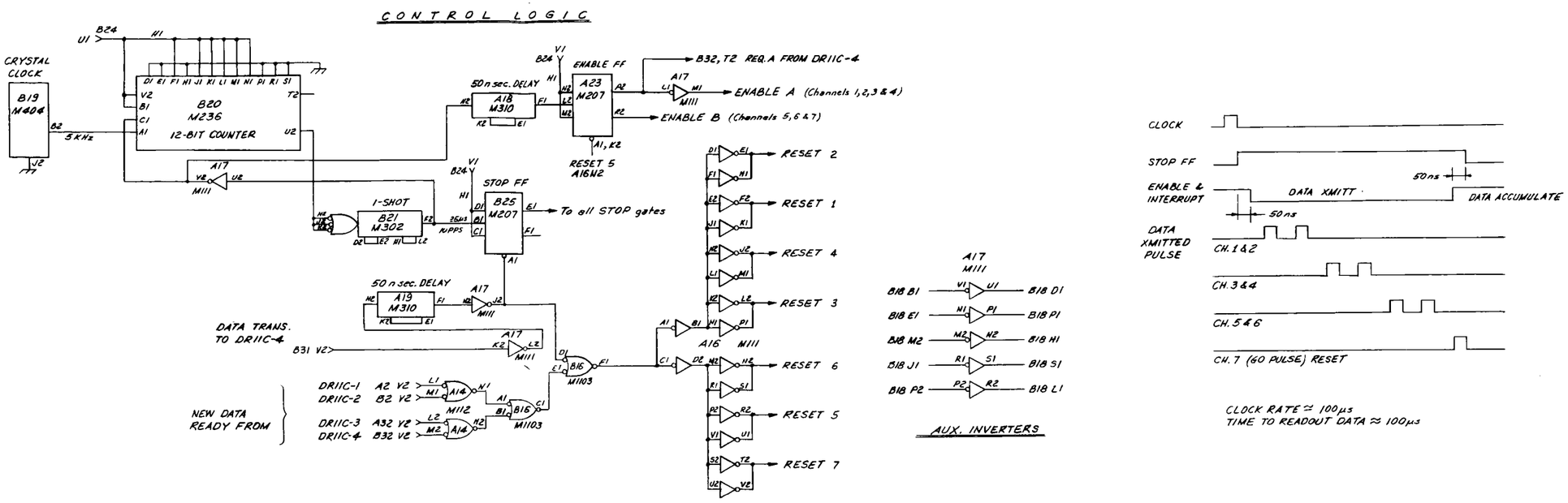

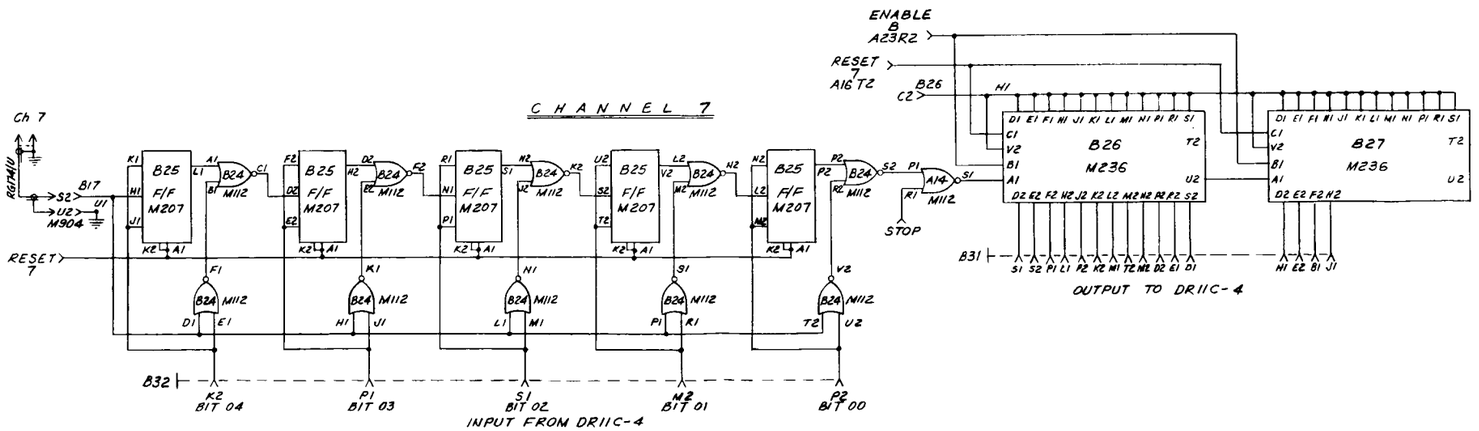

Figure 22. Channel 7 and control logic circuits.

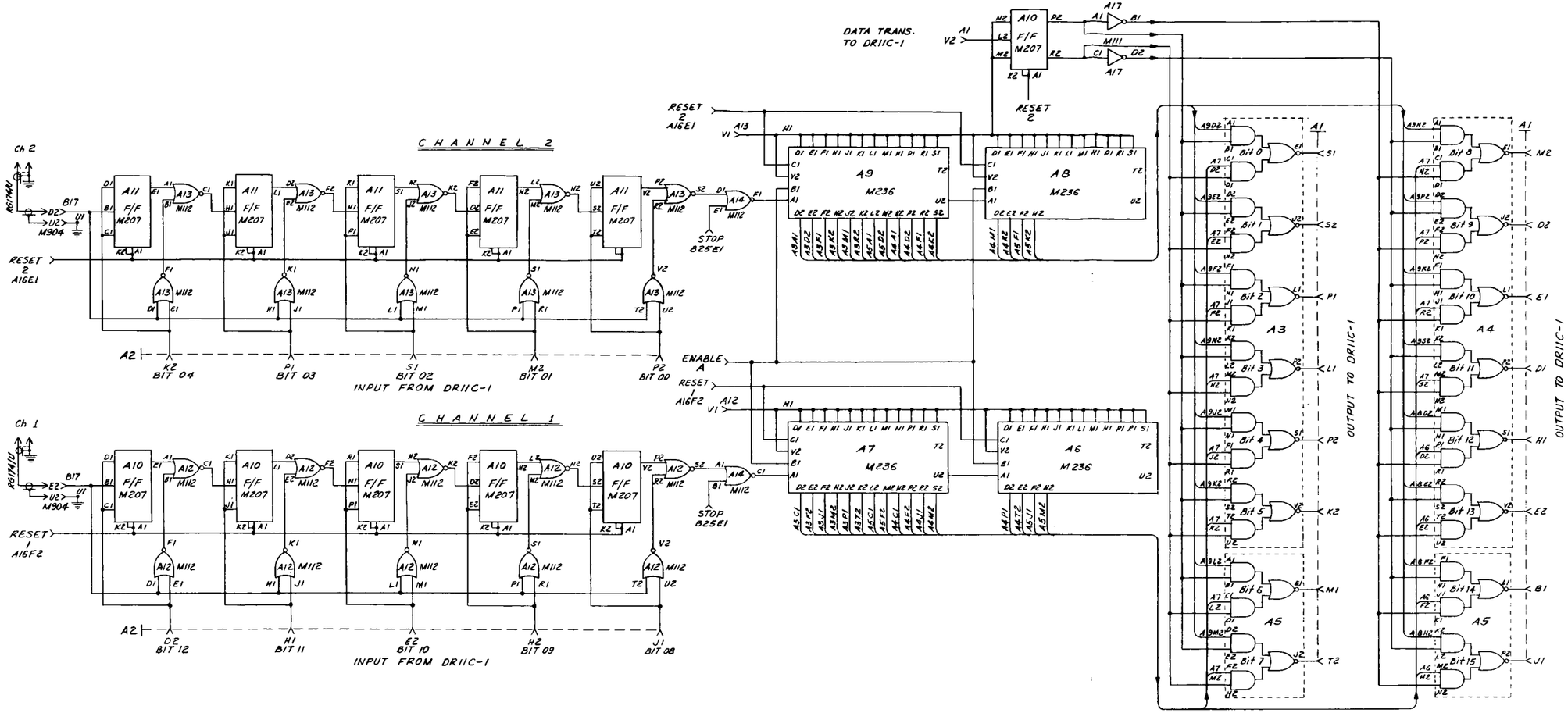

Figure 23. Channels 1 and 2 circuits.

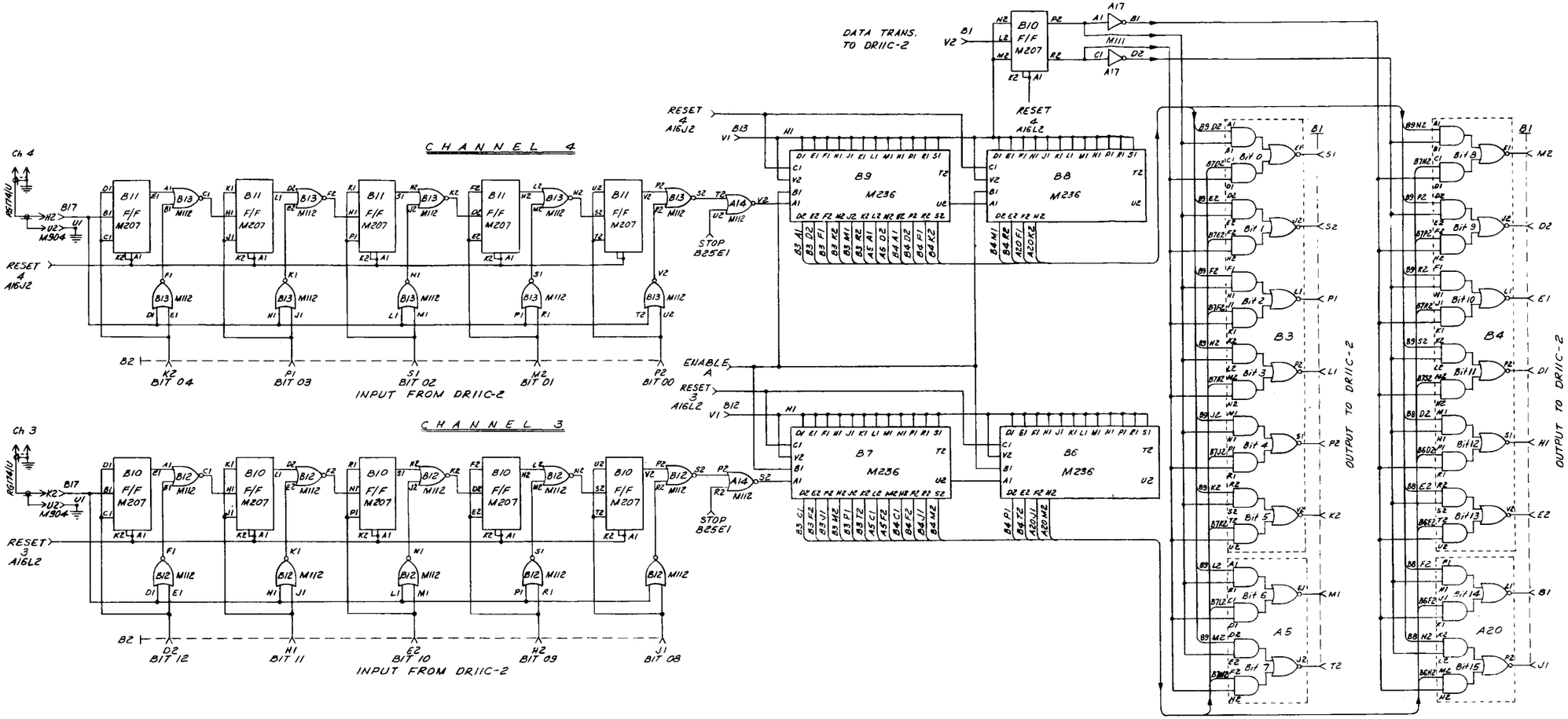

Figure 24. Channels 3 and 4 circuits.

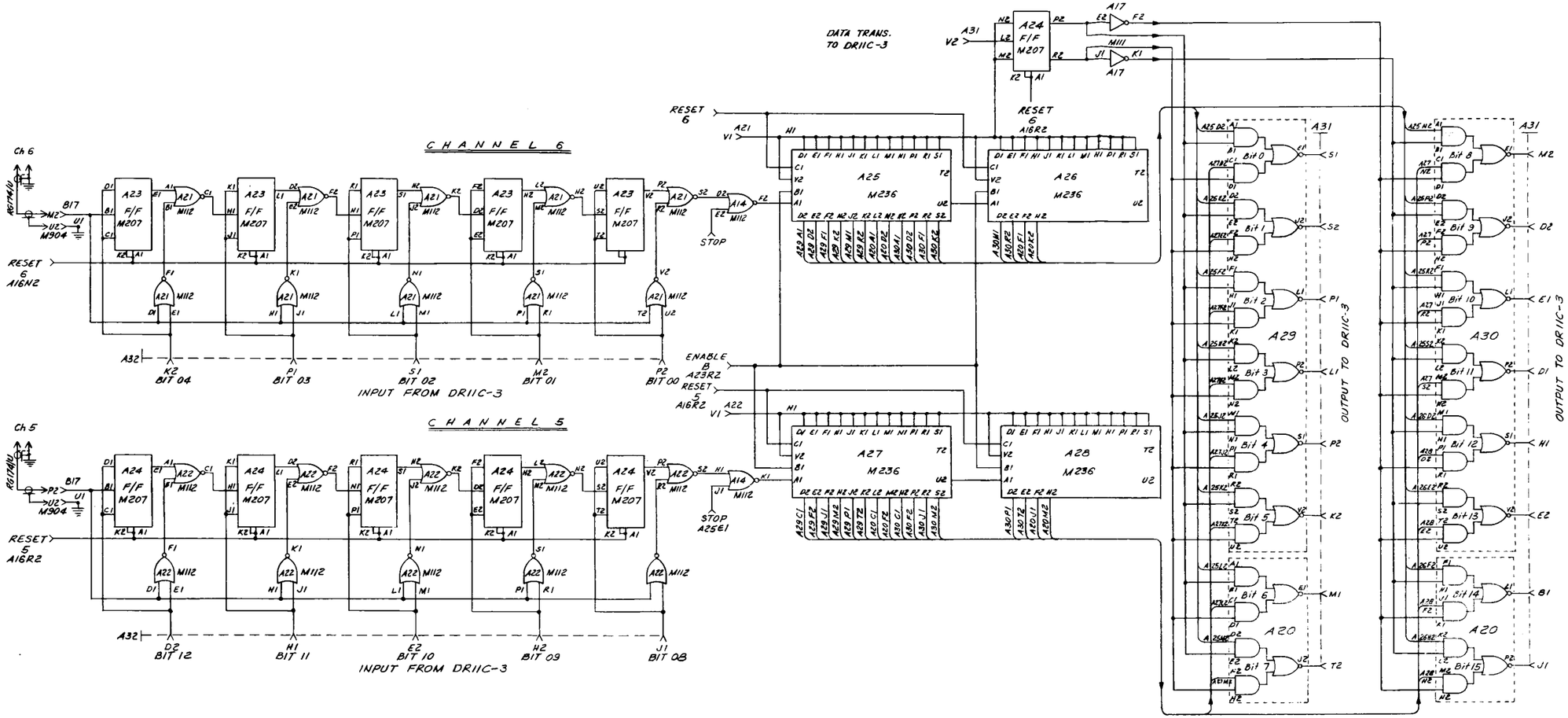

Figure 25. Channels 5 and 6 circuits.

APPENDIX C

"PLOTTING" ROUTINE

The plotting package consists of three modules. The first of these is a set of FORTRAN subroutines which construct the data arrays that will be plotted from parameters remaining on the top of core as a result of the "WRITE" or "READ" routines. The initial procedure is to collapse the 24 precursor group structure used in the experimental analysis into six groups by constructing four-group averages of the beta and lambda values. Then the matrix exponential method of solving coupled differential equations is applied to a modified version of the six group neutron kinetics equations ($\Lambda \frac{dN}{dt} = 0$).

$$N = \frac{\sum_{i=1}^{6} \frac{\beta_i}{\beta} K_i + S^*}{1 - \rho^*}$$

and

$$\frac{dK_i}{dt} = \frac{\lambda_i}{(1-\rho^*)} \sum_{j=1}^{6} \frac{\beta_j}{\beta} K_j - \lambda_i K_i + \frac{\lambda_i}{(1-\rho^*)} S^*$$

where all variables have been defined previously.

The matrix exponential method makes use of a matrix integrating factor in order to obtain a closed form expression for the solution matrix. This solution is obtained by a matrix power series expansion.

The value N resulting from the application of this technique represents the theoretical counts to be compared with the experimental counts.

The second module is an assembly language routine that interfaces the FORTRAN coding with instructions that can only be performed at the assembly language level. One subroutine "DATIN" is used to take data from the data stack at the top of core and store them as the proper FORTRAN variables. The other subroutines provide the input data which the general plotting routines require in order to plot the FORTRAN arrays.

The third module consists of the general plotting routines. These are assembly language programs which scale the data arrays and interact with the operator through the teletype to produce on-line plots and provide labeling information. This general plotting module employs a digital-to-analog converter to provide the signal required for the analog plotter.

The result of executing the three modules is a set of the following plots: (1) measured reactivity (ρ^*) versus time, (2) measured and theoretical counts (N) versus time, and (3) integral measured and theoretical counts versus time.

Hardware. The plotting package will be brought into core from track 2 of the 8K cartridge using the MiniDek Absolute Loader. The actual plots are performed on the 7004B X-Y Plotter made by Hewlett-Packard, an analog recorder which is interfaced with the digital computer through a digital-to-analog converter. (Channel 0 controls the

movement in the Y-direction; channel 1 controls the movement in the X-direction). A control signal is provided by the DR11-C to lift the recording pen under program control.

Operating instructions. This plotting package produces on-line plots, and thus, the appearance of these plots is directed by operator action. When the program begins execution, the first message to the operator describes the plot that is ready to be performed:

RHO VS TIME.

The next message asks if the plot is desired:

DO YOU DESIRE A PLOT?

The operator should respond with a YES or NO and a carriage return. All operator responses must be terminated by a carriage return. Next, the operator is asked whether this should be a point or line plot:

DO YOU WANT LINES DRAWN BETWEEN PLOTTED VALUES?

again a YES-NO response is in order. At this point the appropriate directives are given in order to prepare the plotter for use:

PLEASE PREPARE THE PLOTTER FOR USE

LOCATE THE ORIGIN OF THE GRAPH USING THE ZERO ADJUST.

The zero adjust is used to position the lower left corner of the grid. A carriage return will indicate completion of this operation, and the next message will be printed:

LOCATE THE DIAGONAL CORNER USING THE SCALING FEATURES.

The operator should use the scaling features, the calibrated scale, and the variable scale to locate the upper right corner of the grid. Again, a carriage return initiates the next set of questions. The grid has

twenty divisions in both the X and Y directions, and the data that is to be plotted can be restricted to any portion of the grid by appropriate responses to this set of questions:

WHERE DO YOU WANT THE GRAPH TO BE PLOTTED (0-20)?

MINIMUM X =

MAXIMUM X =

MINIMUM Y =

MAXIMUM Y =

The final operator action is to type the desired title. If only a carriage return is given here, no title is printed and the reactivity will be plotted as a function of time.

After a delay, while calculations are being performed, the next plot is indicated:

COUNTS VS TIME.

The same sequence of communications is repeated. There will be two curves plotted on this graph, the theoretical counts versus time and a point plot of the measured counts versus time. It is recommended that the operator indicate a line plot for the theoretical counts to make this curve distinct. The last plot is indicated by the message:

INTEGRAL COUNTS VS TIME.

The same sequence of communications is repeated. As before, there will be two curves plotted on this grid, and the operator should specify that he wants a line plot for the first curve which is the theoretical integral counts versus time.

At the conclusion of all plotting, a message requesting the operator to select the next program that he desires from the MiniDek is given:

INSERT CARTRIDGE AND SELECT APPROPRIATE CHANNEL.

A carriage return will cause the program from the selected channel to be read into core and begin execution.

VITA

Margarita Kwuris Churchich was born in Buenos Aires, Argentina on July 21, 1936. She attended elementary schools in that city and graduated from high school in November 1953. In March 1954, she entered The University of Buenos Aires where she took courses in Architecture until August 1958. In September 1967, she began her studies at The University of Tennessee, and in June 1971, the Bachelor of Arts with a major in mathematics was awarded to her. Immediately, she began to work toward a Master's degree in the Department of Computer Science. In March 1973, she received the Master of Science degree with a major in Computer Science.