To the Graduate Council:

I am submitting herewith a dissertation written by Vera Jo Williams entitled "Management of Variation in Plant-wide Process Control System Design and Analysis." I have examined the final copy of this dissertation for form and content and recommend that it be accepted in partial fulfillment of the requirements for the degree of Doctor of Philosophy, with a major in Chemical Engineering.

Charles F. Moore, Major Professor

We have read this dissertation
and recommend its acceptance:

Accepted for the Council:

Associate Vice Chancellor
and Dean of The Graduate School

MANAGEMENT OF VARIATION IN PLANT-WIDE PROCESS CONTROL SYSTEM DESIGN AND ANALYSIS

A Dissertation

Presented for the

Doctor of Philosophy

Degree

The University of Tennessee, Knoxville

Vera J. Williams

May 1993

ACKNOWLEDGMENT

The author wishes to express her most sincere gratitude to Dr. Charlie Moore, her major professor, for his support, guidance, friendship, and insightful observations. She also wishes to thank Dr. Jim Downs, Dr. John Prados, Dr. Ken Kirby, and Dr. John Philpot for their time and interest as members of her doctoral committee. Additionally, the author wishes to thank her co-workers, who have provided technically and philosophically enlightening viewpoints throughout her graduate education.

The author also would like to recognize the support and encouragement of her family and friends. Their presence provided the necessary balance to the academic exercises undertaken.

The author gratefully acknowledges financial support for this research received from Eastman Kodak and the University of Tennessee's Measurement and Engineering Control Center.

Finally, the author would like to share some words from Chuang-tse as a thought for all those who, like herself, chose to undertake study for a graduate degree:

> "If the sun and moon lost their light, the mountains and rivers abandoned their vitality, and the four seasons came to an end, no insect or plant would retain its true nature. Yet this is the condition produced in men by an obsession for knowledge. Honesty and simplicity are overlooked, and restlessness is admired. Quiet, effortless action is forgotten, and loud quarreling is heard. Such is the nature of hunger for knowledge. Its noise throws the world into chaos."

ABSTRACT

In recent years, rising material and energy costs have forced process design toward greater utilization of heat integration and materials recycle. This trend reduces the equipment over-design and availability of surge capacity that have frequently been used to lessen the impact of disturbances and reduce the interaction between unit operations. With this change in design philosophy, control system design must move toward a more global view, recognizing that unit operations seldom function in an "isolated" environment.

The approach to control system design and analysis advocated here attempts to go beyond the traditional concepts. In doing so, the process is analyzed as a whole, instead of a sum of independent parts, and the traditional view of disturbance rejection is discarded in favor of a view that focuses on managing variation. Disturbance rejection is the ability of a control system to eliminate the impact of a disturbance on controlled variables. This type of action transforms the disturbance (variation) into movements in the manipulated variables. From a plant-wide perspective, a control system that demonstrates good local disturbance rejection may actually transform the variation to a more critical location in the plant. An approach to disturbance rejection that focuses on the management of variation can allow the plant to better meet the operating objectives.

This work applies a number of steady-state analysis tools to plant-wide control system design and analysis. Singular value decomposition (SVD), relative disturbance gain (RDG), and relative control gain (RCG) are applied to evaluate the variation transformation properties of various control strategies for a plant with material recycle. The relative importance of variables is

incorporated in a manner such that the ability of a control strategy to best meet the overall operating objectives of the plant in the face of disturbances is evaluated. These tools are effectively used to screen our poor control strategies, to reduce the number of strategies that must be given further consideration to a tractable level.

TABLE OF CONTENTS

Chapter

1 INTRODUCTION 1

1.1 Engineering Process Control 1

1.2 Organization of Work 3

2 LITERATURE REVIEW 5

2.1 Engineering Process Control 5

2.1.1 Steady-state Analysis Tools 5

2.1.2 Disturbance Sensitivity 7

2.1.3 Plant-wide Process Control 8

3 ANALYSIS TOOLS 11

3.1 Process Control Tools 11

3.1.1 Component Inventory Tables 11

3.1.2 Singular Value Decomposition 17

3.1.3 Relative Gain Array 21

3.1.4 Disturbance Analyses 22

3.1.5 Relative Disturbance Gain 22

3.1.6 Relative Control Gain 24

4 APPLICATION OF ANALYSIS TOOLS 27

4.1 Process Descriptions 27

4.1.1 Process 1 27

4.1.2 Process 2 28

4.2 Control System Design 36

4.2.1 Plant Operating Objectives 36

4.2.2 Inventory Control 38

4.2.3 Sensor Selection 39
4.2.4 Strategy Selection 41
4.2.5 Transformation of Variation 43
4.2.6 Dynamic Studies 48
4.3 Study Overview 50
5 PROCESS 1 RESULTS 52
5.1 Inventory Control 52
5.2 Traditional SVD Analysis 60
5.3 Production Rate Control 64
5.4 Process 1 - Feed Composition Disturbance 67
5.4.1 Disturbance Analysis 67
5.4.2 Dynamic Studies 80
5.4.3 Comparison of Steady-state and Dynamic Results 87
5.5 Process 1 - Production Rate Disturbance 99
5.5.1 Disturbance Analysis 99
5.5.2 Dynamic Studies 109
5.5.3 Comparison of Steady-state and Dynamic Results 115
5.6 Comparison of Results for the Two Disturbances 125
5.7 Impact of Process Nonlinearities on Steady-state Results 128
5.8 Process 1 Results Summary 132
6 PROCESS 2 RESULTS 134
6.1 Component Inventory Analysis 134
6.2 Steady-state Analysis 137
6.3 Process 2 Results Summary 152
7 CONCLUSIONS AND RECOMMENDATIONS 154

7.1 Control System Design Methodology 154
7.2 Future Work Recommendations 159
LIST OF REFERENCES 162
APPENDIX 168
VITA 174

LIST OF TABLES

4.1 Process 1 Design Data 30

4.2 Process 1 Stream Information 31

4.3 Variable Weights for Objective Function 49

5.1 Process 1 Control Strategies 56

5.2 Traditional Steady-state Gain Analysis Results 62

5.3 Dynamic Performance Measure 63

5.4 Weighted Manipulated Variable Gains 66

5.5 Disturbance Condition Number Analysis - Feed Composition Disturbance 69

5.6 RDG and RCG Disturbance Analysis - Feed Composition Disturbance 71

5.7 Variable Weights for RCG and RDG Analysis 76

5.8 Performance-weighted Disturbance Gains - Feed Composition Disturbance 79

5.9 Dynamic Variability - Feed Composition Disturbance 86

5.10 Comparison of Steady-state and Dynamic Rankings for Transformation of Variation to Measured Variables - Feed Composition Disturbance 88

5.11 Comparison of Steady-state and Dynamic Rankings for Transformation of Variation to Manipulated Variables - Feed Composition Disturbance 90

5.12 Comparison of Steady-state and Dynamic Rankings for Overall

Transformation of Variation - Feed Composition Disturbance 92

5.13 Weighted Manipulated Variable Disturbance Sensitivity Evaluation - Feed Composition Disturbance 96

5.14 Weighted Measured Variable Disturbance Sensitivity Evaluation - Feed Composition Disturbance 98

5.15 Disturbance Condition Number Analysis - Production Rate Disturbance 102

5.16 RDG and RCG Disturbance Analysis - Production Rate Disturbance 104

5.17 Performance-weighted Gains - Production Rate Disturbance..... 108

5.18 Dynamic Variability - Production Rate Disturbance..... 113

5.19 Comparison of Steady-state and Dynamic Rankings for Transformation of Variation to Measured Variables - Production Rate Disturbance..... 116

5.20 Comparison of Steady-state and Dynamic Rankings for Transformation of Variation to Manipulated Variables - Production Rate Disturbance..... 117

5.21 Comparison of Steady-state and Dynamic Rankings for Overall Transformation of Variation - Production Rate Disturbance 119

5.22 Weighted Manipulated Variable Disturbance Sensitivity Evaluation - Production Rate Disturbance..... 121

5.23 Weighted Measured Variable Disturbance Sensitivity Evaluation - Production Rate Disturbance..... 123

5.24 RGA, RDG, RCG Values over a Range of Operating Points - Strategy 1 130
5.25 RGA, RDG, RCG Values over a Range of Operating Points - Strategy 10 131

LIST OF FIGURES

3.1 Aldehyde Oxidation Process Flowsheet 13

3.2 Control Objectives - Aldehyde Oxidation Process 14

3.3 System Boundary - Aldehyde Oxidation Process 15

3.4 Component Inventory Table - Aldehyde Oxidation Process 16

4.1 Process 1 Flowsheet 29

4.2 Process 2 Flowsheet 33

4.3 Process 2 Operating Condition 34

5.1 Component Inventory Table - Process 1 53

5.2 Component Inventory Table - Column Alone 55

5.3 Control Configuration - Strategy 1 57

5.4 Control Configuration - Strategy 9 59

5.5 "Design" Gains with Fresh Feed Production Control 61

5.6 Gains for Strategy 1 61

5.7 Calculation of Performance-weighted Sensitivities 76

5.8 Fresh Feed Composition Disturbance 80

5.9 Strategy 8 Response - Feed Composition Disturbance 81

5.10 Scaling of Dynamic Response Data for Strategy 1 - Feed Composition Disturbance 85

5.11 Dynamic Response Data for Strategy 1 - Feed Composition Disturbance 94

5.12 Production Rate Disturbance (Fresh Feed Rate) 100

5.13 Strategy 10 Response - Production Rate Disturbance 110

5.14 Scaling of Dynamic Response Data for Strategy 6 - Production Rate Disturbance 112

5.15 Dynamic Response Data for Strategy 6 - Production Rate Disturbance 124
6.1 Process 2 Component Inventory Analysis 135
6.2 Process 2 - Control Strategy 1 138
6.3 Process 2 - Control Strategy 2 139
6.4 Process 2 - Control Strategy 3 140
6.5 Process 2 - Control Strategy 4 141
6.6 Process 2 - Control Strategy 5 142
6.7 Process 2 - Control Strategy 6 143
6.8 Process 2 - Control Strategy 7 144
6.9 Process 2 - Control Strategy 8 145
6.10 Closed-loop Performance Measures - Process 2 148

LIST OF SYMBOLS

Symbol	Meaning
B	Column bottoms flow rate
d	Disturbance
D	Column distillate flow rate
F	Column feed rate
F0	Reactor fresh feed rate
m	Manipulated variable
k	Dimensionless rate constant
k_1	Specific rate constant
K	Steady-state gain matrix
K_d	Steady-state disturbance gain matrix
L	Column reflux flow rate
Q	Energy input to column reboiler
$-r_i$	Rate of disappearance of component i, via reaction
U	Matrix of left singular vectors
V	Matrix of right singular vectors
V^*	Column boilup rate
V_r	Reactor volume
w_i	Weighting factor for variable i
y	Process output
x	Controlled variable
x_i	Mole fraction of component i
z	Effect of disturbance

α	Relative Control Gain
β	Relative Disturbance Gain
γ_d	Disturbance condition number
Φ	Dynamic objective function value
λ	Relative gain
Λ	Relative gain array
κ	Condition number
ρ	Density
Σ	Matrix of singular values
σ_{min}	Mminimum singular value
σ_{max}	Maximum singular value
Ξ	Intersivity index
Z	Disturbance rejection index

LIST OF ABBREVIATIONS

Abbreviation	Meaning
SISO	Single-input single-output
MIMO	Multi-input multi-output
PID	Proportional-integral-derivative
EPC	Engineering process control
SPC	Statistical process control
SVD	Singular Value Decomposition
RGA	Relative Gain Array
RDG	Relative Disturbance Gain
RCG	Relative Control Gain
PCA	Principal Component Analysis
PLS	Partial Least Squares
CSTR	Continuous stirred-tank reactor

CHAPTER 1

INTRODUCTION

The chemical process industry involves many complicated processes. Within these processes, unit operations are often interconnected through materials recycle and heat integration. At times, every process is subject to operational disturbances. The most basic objective of a control system is to regulate process operation in the face of such disturbances. In complicated, interconnected plants, it is critical to minimize the propagation of disturbances through many units. Control system design that does not address the propagation of disturbances can hinder the production of consistent, high-quality products. Control system design must move forward to incorporate unit interactions and the effective management of variation.

Traditionally, process control engineers have focused on designing elaborate control systems to manage process variation. Simple process control designs are frequently overlooked in favor of complex controllers that allow the control engineer to display the "skills of the trade." The high-profile approach that deals with computing-intensive controllers does not recognize the importance of basic process understanding that is critical to the design of any type of controller. Also, without a good understanding of process behavior, continuing process improvement is difficult to achieve.

1.1 Engineering Process Control

Engineering process control (EPC) algorithms can effectively maintain safe operation and manage variation. Through control system design and

controller tuning, a process engineer can direct the variation to "benign" locations. For example, a flow disturbance entering a surge tank is most effectively transformed into variation in the tank level, as opposed to variation in the outlet flow. Variation in the level is relatively harmless; overflowing the tank or running it dry would create problems, but variations around an intermediate level are generally acceptable. Conversely, variation in the outlet flow from the tank will disturb the operation of the downstream unit. Variation in an outlet flow from a unit becomes a disturbance to the operation of subsequent units.

Within the realm of EPC, several tools exist that offer insight into the strengths, weaknesses, and sensitivities of a process. Steady-state analysis tools effectively guide control system design. Singular Value Decomposition (SVD) and Relative Gain Array (RGA) guide the selection of controlled variables, the selection of manipulated variables, and controller pairing for single-input single-output control systems. These tools have been applied to individual unit operations and integrated plants. However, these techniques do not consider the ability of control strategies to shift variation to less critical locations. A weighted-SVD analysis that incorporates the operating objectives of the plant is a first step toward recognizing that variation must go somewhere. The further extension of these tools to incorporate the idea of variation propagation would guide the management of variation.

Sensitivity analyses provide information about the effects of disturbances and the effects of changes in manipulated variables on measured variables. These analyses provide insight on the economic impact of disturbances, primarily in the operation of distillation columns. Such an analysis of an entire plant may provide information about the natural location of variation in a plant.

1.2 Organization of Work

This work focuses on integrating the philosophy of management of control with the application of Engineering Process Control. The result is a plant-wide control system design methodology that recognizes the presence of variation and deals with it in the most appropriate way.

Chapter 2 provides a literature review of related material. Several aspects of engineering process control are discussed. This discussion includes material on sensor placement, controller pairing, and disturbance analyses. Also included in this chapter is a discussion of relevant statistical process control tools. These tools include control charts and multivariable analysis tools. The last section of the chapter presents work integrating engineering process control and statistical process control.

Chapter 3 presents technical background material relevant to the research. Engineering process control is discussed, with particular interest focused on steady-state analysis tools and plant-wide process control. Statistical process control charts and multivariable analysis tools are presented as two areas of statistical process control that have found use in the continuous process industry. Additionally, research dealing with the integration of engineering process control and statistical process control is discussed.

Chapter 4 describes the work performed. Process descriptions are provided and the research steps are presented. The final section of this chapter presents a general overview of the study.

Chapter 5 presents the results of the study for a reactor/distillation column process. The data is presented in the form of tables and figures.

Interpretation is provided along the way and a summary is presented at the end of the chapter.

Chapter 6 presents a discussion of a complex process. The chapter includes a discussion of several of the key factors in control of this process. Limited steady-state and dynamic results are shown.

Chapter 7 is a broad summary of the success of the research. The main focus of this chapter is to draw conclusions from the information presented in chapters 5 and 6 regarding a generalized approach to control system design.. Potential areas of future work are also discussed.

CHAPTER 2

LITERATURE REVIEW

Considerable literature exists that deals with engineering process control. The literature is rooted in a traditional engineering approach to automatic control of a plant. Historically, the primary focus has been on regulatory control of individual unit operations. More recently, literature has begun to address the issue of plant-wide process control.

2.1 Engineering Process Control

As the computer came of age, engineering process control moved from a hardware-limited discipline to an imagination-limited discipline. With computers available that require only an instant to perform calculations, new and complicated control algorithms surface at an ever-increasing rate. Inherent in this situation is the risk of forsaking better control system design through process understanding for the glamour of building a bigger and more sophisticated mousetrap.

2.1.1 Steady-state Analysis Tools

Many researchers have recognized the importance of using simple analysis tools during control system design. These tools include those based on steady-state information, information easily obtainable from a process. One of the first steady-state analysis tools introduced for application in the design of control systems was the Relative Gain Array (RGA). Bristol (5) introduces the RGA and provides rules for pairing controlled variables with manipulated

variables based on the RGA. Grossidier et al. (21) discuss the basis for utilizing steady-state gains to determine closed-loop properties. They discuss ways of studying stability and controllability with steady-state information. Relative gains are the main focus for such determinations, as well as the evaluation of system sensitivity to errors.

Singular value decomposition (SVD) also uses steady-state gains to yield information concerning controller pairings. In addition, SVD guides sensor placement and relative difficulty of control for different control schemes. Klema and Laub (28) discuss SVD and its properties, as related to linear algebra and linear systems. Lau et al. (32) employ singular values to evaluate stability margins for multi-input multi-output (MIMO) systems. Downs (12) applies SVD in the design of control systems for azeotropic distillation columns. Moore et al. (40) discuss determining sensor location and type for an ethanol-water distillation column. Canter (7) provides an extensive application of SVD to the same ethanol-water distillation column. Principal component analysis, modified principal component analysis, and intersivity index are three selection methods illustrated by Moore and Canter.

Realizing the significance of screening unstable control strategies, Niederlinski (46) introduced a steady-state measure to determine stability in interacting multivariable control systems. Applied to a system, the technique guides single-input single-output (SISO) pairing of manipulated inputs and measurable outputs. Niederlinski makes an extension to consider dynamic response based upon critical loop gain and critical frequency, and presents a method for selecting initial controller tunings.

2.1.2 Disturbance Sensitivity

Steady-state analysis tools have primarily been applied to evaluate the impact of setpoint changes. Contrary to this approach, the primary responsibility of most control systems is to reject load disturbances. Luyben (34) reviews previous work in the area of disturbance rejection. He asserts that an inherent "eigenstructure" exists that yields a naturally self-regulating (in terms of load disturbances) and self-optimizing plant. Luyben (33) compares the energy requirements of three distillation column control strategies: (1) dual-ended composition control with reflux and boil-up, (2) single-ended control with reflux with the ratio of boil-up to feed is fixed, and (3) singled-ended control with boil-up while the reflux to feed ratio is fixed. He illustrates that the energy demand differences for these three strategies are column dependent; steady-state analyses are necessary to select an appropriate strategy.

Relative Disturbance Gain (RDG) is a steady-state tool that considers the impact of disturbances on the plant. Stanley et al. (56) introduce RDG to help determine whether interactions resulting from a disturbance are favorable or unfavorable. Stanley et al. apply RGA and RDG to steady-state gains to gain insight into a system's transient response to disturbances. Marion-Galarraga et al. (37) develop a methodology utilizing RDG and RGA to evaluate and compare control strategies.

Waller et al. (64) study the disturbance sensitivity of four distillation column control structures. They propose a disturbance sensitivity factor that considers the steady-state and dynamic impact of a disturbance on measured variables. Their results demonstrate a strong correlation between the

disturbance sensitivity measure and the dynamic system response to a disturbance.

Tolliver et al. (61) present a four step procedure for distillation column control system design and evaluation: (1) list objectives, constraints, and potential disturbances, (2) select the basic control structure, (3) locate the optimum control plate, and (4) evaluate the control controllability. They stress the importance of identifying potential disturbances and selecting a strategy that effectively rejects these disturbances. Their method is based on the use of steady-state information.

Skogestad and Morari (55) introduced a disturbance condition number. The disturbance condition number measures the magnitude of manipulated variable changes necessary to reject a disturbance, relative to the changes necessary to reject a disturbance of the same magnitude in the "best" direction of the plant. They discuss the relationship of this measure to the RDG, as well as the limitations and strengths of each.

2.1.3 Plant-wide Process Control

Control system design frequently overlooks the overall operating objectives of a plant. Several researchers have encouraged consideration of the entire plant, particularly when materials recycle and energy integration is involved. Buckley (6) was one of the first to realize the importance of considering unit interactions when designing a material balance control scheme. More recently, research has begun to consider the entire plant and to address the impact of material and energy recycle on control system design. Papadourakis et al. (48) discuss the impact of material recycle on the RGA for

units involved in the plant. They show that controller pairings that appear acceptable based upon the analysis of a single unit may not be acceptable when the coupling introduced by recycle is considered. Williams (65) applies RGA and SVD to a plant with material recycle. Weighting factors are employed in the SVD analysis to represent the operating objectives of the plant. The approach is used as a first level screening of control strategies.

The concept of plant-wide control system design has received attention in the recent literature. Stephanopoulus (57) reviews previous work involving control system design for plants and discusses techniques employed during design. He also presents an outline for future work. Stephanopoulus points out the importance of screening with steady-state information, while realizing the limitations inherent in the process. In particular, RGA does not consider transient interactions that may be large and it does not suggest new manipulated variables. Stephanopoulus also discusses an interactive SVD program that would allow the designer to bias the solution based upon practical heuristic rules.

Work at the University of Massachusetts has often addressed the effect of plant design on control system design. Fisher et al. (14) discuss the impact of process design on control system performance. They stress the value of steady-state control information. Fisher et al. (15) provide operating heuristics employed in the control of commonly occurring unit operations. Douglas (9) outlines a procedure for evaluating the steady-state operability and control of chemical plants. The importance of operability and controllability of plant is discussed, with emphasis on evaluation of preliminary designs. Stephanopoulos (57) summarizes Douglas' approach as involving the

simultaneous development of material balance control and local steady-state control for units.

Govind and Powers (20) propose a non-numerical problem-solving technique for control system design. Control strategies are screened through use of a cause-and-effect representation of the process. Cause-and-effect graphs allow detection of interactions that might be difficult to recognize from the mathematical representation of the process.

Umeda et al. (62) suggest decomposition of a plant into an aggregate of units with alternate schemes for the units being generated and then coordinated. Morari et al. (44) discuss the decomposition of a process and the classification of the control tasks. A multilayer, multiechelon decomposition of the process is proposed. In multilayer decomposition, the control tasks are divided into two categories, regulatory and optimizing. The regulatory layer involves the control strategy and is responsible for maintaining desired process operation. The optimizing layer determines what the desired process operating condition should be in the face of economic constraints and external disturbances. Multiechelon decomposition involves dividing the plant into groups of interacting unit operations; each group is controlled independently from the remaining groups, yet the groups are coordinated from time to time. Decomposition of the process results in a series of control strategies that must be evaluated for response to expected disturbances.

CHAPTER 3

ANALYSIS TOOLS

Many tools exist that can aid control system design. These tools focus primarily on attempting to differentiate between the expected performance of different control strategies. The application of most has been to the control of individual unit operations.

3.1 Process Control Tools

Many engineering analysis tools have been used to successfully guide process control system design. Several of these tools will be presented, with emphasis placed on the aspects that have proved useful. These tools include Singular Value Decomposition (SVD), Relative Gain Array (RGA), Relative Disturbance Gain (RDG) and disturbance analyses. Also, a method of identifying the method of inventory control for each component in the plant will be discussed.

3.1.1 Component Inventory Tables

Prior to design of a control system, the inventories in a plant must be clearly identified. Additionally, the options available for control of these inventories must be enumerated. Within a plant, it is important to identify inventory controls. For an individual unit operation, identifying overall and component inventory controls is usually straightforward. However, the difficulty and importance of identifying component inventory controls increases with growing plant complexity and the introduction of recycles.

One method of identifying component inventory controls is through component inventory tables. (12) A component inventory table helps identify whether or not every component inventory is being controlled by identifying how it is being controlled. The approach can be best explained through an example. (12) Figure 3.1 shows a flow sheet for an aldehyde oxidation process. Figure 3.2 lists the control objectives of the plant.

The process was being operated with a temperature controller at the base of the lowboiler column. This controller was tuned tightly to maintain 4% water in the bottoms stream. There was no operational objective that dictated this strategy. It was probably incorporated in the control system when the column control strategy was developed. However with this control system, the lowboiler column was frequently running into operational problems and allowing more water to exit the column in the bottoms than desired.

If the focus of inventory control is at the bulk level, there appears to be no problem that could account for the observed behavior. However, through generating a component inventory table to account for each component, it becomes apparent that the inventory of water is not being controlled. Figure 3.3 shows the system boundary of interest. Figure 3.4 displays the component inventory table for the chosen system boundary. The amount of water coming in, above or below the amount leaving the bottom of the lowboiler column, integrates within the plant. Hence, the setpoint on the temperature controller should be adjusted to accommodate water inventory changes. Or if the column split is not very sensitive, the controller turned off and steam to the base of the lowboiler column put on flow control.

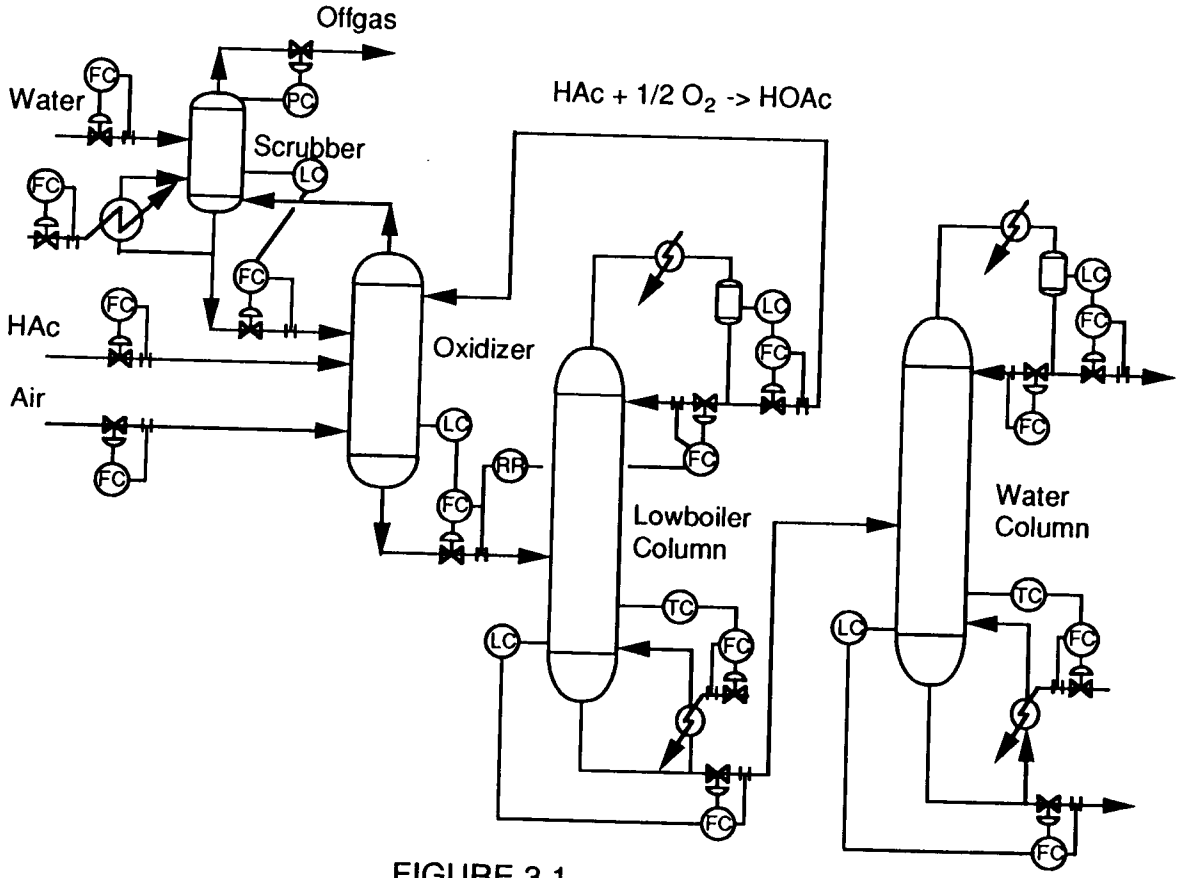

FIGURE 3.1

Aldehyde Oxidation Process Flowsheet

* Maintain oxidizer water composition at 0.6 to maximize catalyst activitiy
* Keep aldehyde loss less than 3 mol/hour
* Maintain oxygen in offgas less than 6%
* Keep acid in offgas less than 0.1 ppm

FIGURE 3.2

Control Objectives - Aldehyde Oxidation Process

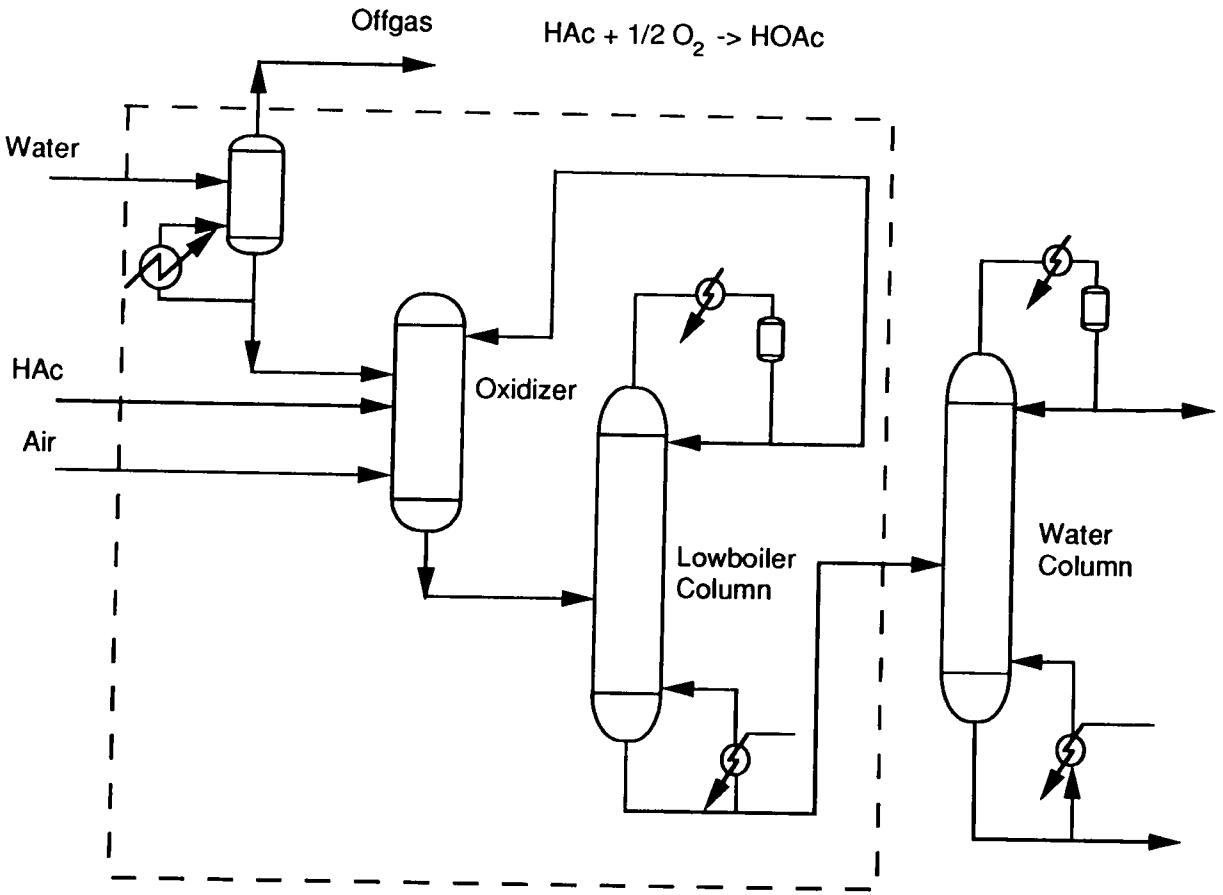

FIGURE 3.3

System Boundary - Aldehyde Oxidation Process

Component	Input	Generation	Output	Consumption	Accumulation
H_2O	Scrubber Feed	0	Water Column Feed	0	
HAc	Oxidizer Feed	0	0	By Reaction	Self-regulating by reaction
HOAc	0	By Reaction	Water Column Feed	0	HAc Feed
N_2	Oxidizer Feed	0	Offgas	0	Pressure control on Scrubber
O_2	Oxidizer Feed	0	Offgas	By Reaction	Air Flow

FIGURE 3.4

Component Inventory Table - Aldehyde Oxidation Process

3.1.2 Singular Value Decomposition

The singular value decomposition of the matrix K results in three matrices such that (28)

$$K = U\Sigma V^T$$

where

K is an *n x m* matrix;

U is an *n* x *n* orthonormal matrix of column vectors called "left singular vectors";

Σ is an *n* x *m* diagonal matrix of "singular values" that are arranged in descending order; and

V is an *mxm* orthonormal matrix of column vectors called "right singular vectors".

An important measure obtained from the SVD of a gain matrix is the condition number. The condition number is defined as

$$\kappa = \frac{\sigma_1}{\sigma_n}$$

where

κ is the condition number,

σ_1 is the largest singular value, and

σ_n is the smallest non-zero singular value.

The condition number is a measure of the relative strengths of the control loops; the lower the condition number, the better "conditioned" the control problem.

The sensitivity of the process is also important to consider during control system design. The smallest non-zero singular value represents the weakest

part of the control system. It is a measure of the sensitivity of the weakest loop present in the plant; the larger the minimum singular value, the more control available in the weakest direction of the control strategy.

Controller pairings are frequently based on either condition number or smallest singular value. However, a combined approach allows consideration of both sensitivity and interaction and may more accurately represent a measure of the overall control problem. The Intersivity Index combines the two aspects and is expressed as follows (40):

$$\Xi = \frac{\sigma_n}{\kappa} = \frac{\sigma_n^2}{\sigma_1}$$

That is, the ratio of the smallest singular value, represented here by σ_n, to the condition number, shown as κ; the larger the intersivity index, the better the combination of sensitivity and interaction of the control problem.

A steady-state gain matrix forms the basis for the relationship between SVD and process control. In a physical control problem, there may be *n* measured variables to be controlled and *m* manipulated variables available for control. At a given steady-state, a relationship exists between the measured variables (sensors) and manipulated variables (valves) that can be written as

$$x = Ku$$

where

x is a vector of length *n* representing the measured variables;

u is a vector of length *m* representing the manipulated variables; and

K is an *n* x *m* matrix of steady-state gains.

Physical scaling produces a gain with the units

$$\frac{\%\ \text{range sensor}}{\%\ \text{span valve}}$$

Scaling the process gains in this manner creates a common unit system.

The SVD analysis is performed on the steady-state gain matrix K. The three matrices into which this matrix is decomposed have physical meaning with regards to the process steady-state behavior. The vectors comprising the matrix U provide the most appropriate coordinate system for viewing the process measurements. The first vector indicates the direction of measurements that is most sensitive (easiest direction in which the process may be moved). The second vector represents the most sensitive direction that is orthogonal to the first. The vectors comprising the V matrix provide the most appropriate coordinate system for viewing the manipulated variables. The first vector indicates the direction of manipulated variable movements that has the most impact on the process. The second vector represents the direction of manipulated variable movements that has the most impact, such that the direction is orthogonal to the first direction. The singular values are a measure of the relative scaling between the U and V matrices. These values measure the relative strengths and weaknesses of the open-loop process.

SVD has also found application in the area of disturbance rejection. Let a process be described by the following model

$$\begin{aligned} x &= Km + K_d d \\ &= Km + z \end{aligned}$$

where

K_d is the disturbance gain matrix;

d is a vector of disturbances; and

z represents the effect of the disturbances on x.

A disturbance condition number can be defined as (55)

$$\gamma_d = \frac{\left\|K^{-1}z\right\|_2}{\|z\|_2}\sigma_{max}(K)$$

This measure is the ratio of the magnitude of manipulated variable movement necessary to compensate for the disturbance relative to the magnitude of correction needed to reject a disturbance of the same magnitude, but in the "best" disturbance direction of the plant. Smaller numbers are favored; numbers close to one indicate the disturbance lies in a direction close to that of the best disturbance direction. It is also important to consider the magnitude of changes necessary to reject the disturbance even if it is in the best direction. If the disturbance condition number is close to one, the magnitude of changes required may still be large. A strategy with a large disturbance condition number and a small value for $1/\sigma_{max}$ may have a better response than a strategy with a small disturbance condition number and a large value for $1/\sigma_{max}$. Based on this consideration, another measure should be considered that attempts to recognize the fact that σ_{max} should be large while γ_d should be small. A disturbance rejection index is created that represents the inverse of the 2-norm of the vector of manipulated variable gains necessary to reject a given disturbance

$$Z = \frac{\sigma_{max}}{\gamma_d} = \frac{\|z\|_2}{\left\|K^{-1}z\right\|_2}$$

This measure should be large for good control strategies; large values of σ_{max} and small values of γ_d are desirable.

3.1.3 Relative Gain Array

Relative Gain Array (RGA) is another analysis tool frequently used in the design of control systems. (5) RGA provides a methodology for selecting pairs of input and output variables that minimize the two-way loop interaction. A relative gain is the ratio of an open-loop gain (the process gain of an isolated loop) to a closed-loop gain (the process gain with all other control loops closed), expressed as

$$\lambda_{ij} = \frac{\left(\partial y_i / \partial m_j\right)_{m_k, k \neq j}}{\left(\partial y_i / \partial m_j\right)_{y_k, k \neq i}}$$

where

the numerator is the change in the *i*th controlled variable per change in the *j*th manipulated variable (holding all other manipulated variables constant), and

the denominator is the change in the *i*th controlled variable per change in the *j*th manipulated variable (holding all other controlled variables at setpoint).

The relative gain array is a matrix of λ_{ij} values arranged so that the columns correspond to process input variables and the rows correspond to process output variables; λ_{ij} represents the relative gain of the *i*th input variable with respect to the *j*th output variable. This array can be shown as

$$\Lambda = \begin{bmatrix} \lambda_{11} & \cdots & \lambda_{1n} \\ \vdots & \ddots & \vdots \\ \lambda_{n1} & \cdots & \lambda_{nn} \end{bmatrix}$$

Two general rules for pairing input variables and output variables based on

relative gains are (1) pair input variables and output variables with the non-negative elements that are closest to one, and (2) never pair with negative elements. Pairing with negative elements can create stability problems when loops are deactivated. Pairing input variables and output variables based upon the RGA provides a method to quantify control loop interaction at steady-state.

3.1.4 Disturbance Analyses

Disturbance analyses have been traditionally used to evaluate the impact of disturbances on key process variables. (33) Small changes in a disturbance variable are made and the response of the measured variables is calculated

$$\left(\partial x_i / \partial d_j\right)_{m_k=0}$$

where

∂c_i is the change in the ith measured variable; and

∂d_j is the change in the jth disturbance variable.

The results can indicate where the process, and selected inventory control strategy, will inherently put variation. If employed during the design phase of a control system, disturbance analyses can help evaluate the ability of a control strategy to transform variation to benign locations.

3.1.5 Relative Disturbance Gain

Stanley et al. (56) introduced the relative disturbance gain (RDG). It is similar to the RGA, but considers the impact of disturbances on the plant. The RDG can be used to evaluate whether controller interactions are favorable or unfavorable in disturbance rejection. The measure is a ratio given by

$$\beta_i = \frac{(\partial m_i / \partial d)_{x_k=0}}{(\partial m_i / \partial d)_{x_i=0, m_k=0, k\neq i}}$$

The numerator is the amount of movement required, in the manipulated variable of interest, necessary to reject the disturbance with all other controlled variables held at set point. The denominator is the movement required of the manipulated variable to reject the disturbance, with respect to the impact on the associated controlled variable, with all other manipulated variables held constant. The RDG is very similar to the disturbance condition number. The difference is that the RDG uses the diagonal plant for normalization while the disturbance condition number uses the "best" direction for normalization.

It has been proposed that the RDG can be used for several purposes (56): (1) to evaluate whether controller interactions are favorable or unfavorable in disturbance rejection; (2) to decide whether or not decoupling should be used; and (3) what type of decoupling structure is best, if decoupling is to be used.

It is desirable that a control strategy have a low value for the numerator and the denominator of the RDG. A strategy may have a good RDG (between negative one and positive one) while having poor disturbance rejection properties (large values for both gains). Conversely, a strategy may have a poor RDG while actually having promising disturbance rejection properties (small values for both gains).

The numerator represents the impact of the disturbance on the manipulated variables if perfect disturbance rejection were achievable. A weighted summation of these values for the control loops of interest offer an overall measure of disturbance rejection if all variation is transformed to the

manipulated variables

$$\sum a_i \left| (\partial m_i / \partial d)_{x_k=0} \right|$$

This quantity is similar to the numerator of the disturbance condition number. The difference being that the numerator of the disturbance condition is a normalized 2-norm while this quantity is a weighted 1-norm of the same vector

$$m = K^{-1} z$$

The information in the denominator is a measure of the manipulated variable movement necessary to reject the disturbance if only the loop of interest is active

$$\sum a_i \left| (\partial m_i / \partial d)_{m_j=0, j\neq i, x_i=0} \right|$$

where a_i is the relative weight for variable *i*. Information about the overall disturbance rejection properties is contained in weighted summation of the components of the RDG.

3.1.6 Relative Control Gain

A new ratio is proposed that also deals with the impact of interaction on disturbance rejection. The relative control gain is expressed as

$$\alpha_i = \frac{(\partial x_i / \partial d)_{x_k=0, k\neq i}}{(\partial x_i / \partial d)_{m_k=0}}$$

The numerator represents the impact of a disturbance on a controlled variable, when all other controlled variables are held at set point. The denominator represents the impact of a disturbance on a controlled variable when all manipulated variables are held constant. The RCG has several attractive properties. It is scale-invariant, independent of controller design, and can be

calculated from steady-state information.

The RCG is similar to the RDG; it evaluates the effect of interaction on disturbance rejection, but in terms of variation in controlled variables. Numbers less than negative one or greater than one indicate that the other control loops increase the impact of the disturbance on the measured variable being considered. For the key control loop (or loops), this number should be between negative one and one. If the RCG value is not in this range, consideration should be given to deactivating the loop (or loops) that are amplifying the variation in the key variable.

The information contained in the RCG is employed to complement the information contained the RDG. The weighted sum of the closed-loop gains (numerator of the RCG) provides a measure of impact of a disturbance on the controlled variables if all other controlled variables are held at set point

$$\sum a_i \left| (\partial x_i / \partial d)_{m_i, x_j = 0, j \neq i} \right|$$

A weighted sum of open-loop gains (denominator of the RCG) measures the impact of a disturbance on the controlled variables if no variation is transformed to manipulated variables

$$\sum a_i \left| (\partial x_i / \partial d)_{m_j} \right|$$

The weights represent the relative importance of the measured variables.

For a two-input two-output system, the closed-loop gain of the RCG (the numerator) contains information associated with the open-loop gain of the RDG (the denominator); the numbers represent the impact of the disturbance on two different variables under the same conditions. These numbers are an indication of the variation transformation properties if only one control loop is active. A

combination of these numbers can identify control strategies that have favorable disturbance rejection properties, with regard to the overall operating objective of the plant

.

$$\sum_{i=1}^{p} a_i(\partial x_i / \partial d)_{m_i=0,x_j=0,j\neq i} + \sum_{i=1}^{p} b_i(\partial m_i / \partial d)_{x_i=0,m_j=0,j\neq i}$$

where

a_i is the weight for measured variable i;

b_i is the weight for manipulated variable i; and

p is the number of quality control loops.

Strategies with low values are favored.

CHAPTER 4

APPLICATION OF ANALYSIS TOOLS

This work involves several aspects of control system design. The emphasis is on incorporating variation management in control system design. The work focuses on, but is not limited to, the application of steady-state analysis tools. Two chemical processes with material recycles are studied. The first process is evaluated very thoroughly. The second process is used more as a test case for the analysis tools.

4.1 Process Descriptions

This work involves study of two processes. Each process has a material recycle integrating at least two unit operations. The first process has a reactor and a distillation column, where the distillate from the column returns to the reactor. This process involves only two components and employs ideal component behavior assumptions. The second process is a challenge problem presented by Tennessee Eastman Company workers. This process involves eight components and five unit operations, and is heavily integrated through material recycle.

4.1.1 Process 1

The first process originated with workers at the University of Massachusetts (48). Small design modifications altered the process to better suit the needs of this work. The module consists of a continuous-stirred-tank reactor (CSTR) and a distillation column integrated through recycle of the

column distillate to the reactor. Only two components, J and K, are present in the plant. Figure 4.1 shows a flow sheet of the process. Table 4.1 shows steady-state operating conditions. Table 4.2 shows plant design parameters.

In many respects, this module represents an idealized plant. The reaction occurring is

$$J \rightarrow K$$

This reaction is first order in concentration of J, and the rate of disappearance of A is expressed as

$$-r_J = k_1 C_J$$

where

k_1 is the reaction rate constant and is equal to 1.7044 hr^{-1}; and

C_J is the concentration of J in $lbmole/ft^3$.

The reactor is isothermal, and constant density and negligible heat effects are assumed. The module is a binary system that is ideal in terms of vapor-liquid-equilibria (VLE); a constant relative volatility is assumed for separation purposes. From an observation standpoint, it is assumed that stream compositions can be measured. The assumed operational data and measurement availability simplify this plant. Although this plant provides a good basis for initial work, any tools or methods developed must be applied to a more complicated system to verify or denounce their effectiveness.

4.1.2 Process 2

The second plant was presented by workers from Tennessee Eastman Company at the November 1990 American Institute of Chemical Engineers

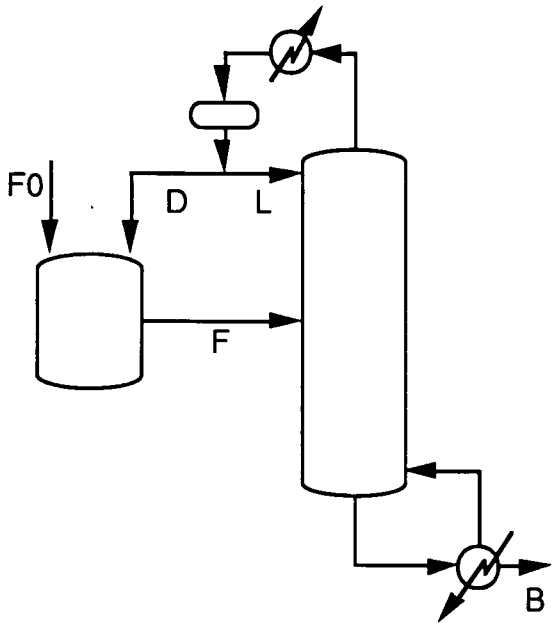

FIGURE 4.1

Process 1 Flowsheet

TABLE 4.1

Process 1 Design Data

Parameter	Value
Residence Times	
Reactor	0.5 h
Reboiler	0.0833 h
Condenser	0.0833 h
Relative Volatility	2
Rectifying Trays	8
Stripping Trays	12
Rate Constant	$k = 0.8522$ $k = V_r \rho k_1 / F$

TABLE 4.2

Process 1 Stream Information

Stream	Flow Rate (lbmols/hr)	Mole fraction of J
F0	239.5	0.900
F	500.0	0.500
D	260.5	0.950
B	239.5	0.0105
L	572.6	0.950

national meeting. (13) This plant represents an industrial control problem. Figure 4.2 shows the process configuration. Table 4.3 displays base case operating conditions. The plant includes five unit operations: a reactor, a stripper, a separator, a condenser, and a compressor. These units are interconnected through materials recycle; the overhead streams from the stripper and the separator are returned to the reactor. There are eight components involved in this process: two desired products (G and H), four reactants (A, C, D, and E), one inert (B), and one undesired product (F).

Four chemical reactions occur within the reactor. Two reactions produce the desired products, G and H, while two other reactions produce an undesired by-product, F.

$$A(g) + C(g) + D(g) \rightarrow G(liq)$$

$$A(g) + C(g) + E(g) \rightarrow H(liq)$$

$$A(g) + E(g) \rightarrow F(liq)$$

$$3D(g) \rightarrow 2F(liq)$$

All four reactions are irreversible and exothermic. Detailed kinetic information is not available; however, reaction 1 has the highest activation energy, thus making it the most sensitive to temperature changes. Also, all reactions are approximately first order with respect to the reactant concentrations.

Process complexity increases with the presence of vapor and liquid phases. Gaseous reactants feed to the reactor where they react to form liquid products. A non-volatile catalyst dissolved in the liquid phase catalyzes the reactions; the catalyst remains in the reactor while the products leave as vapors. The vapor products from the reactor cool and condense in the condenser. The condensed components are fed to the separator while any non-condensed

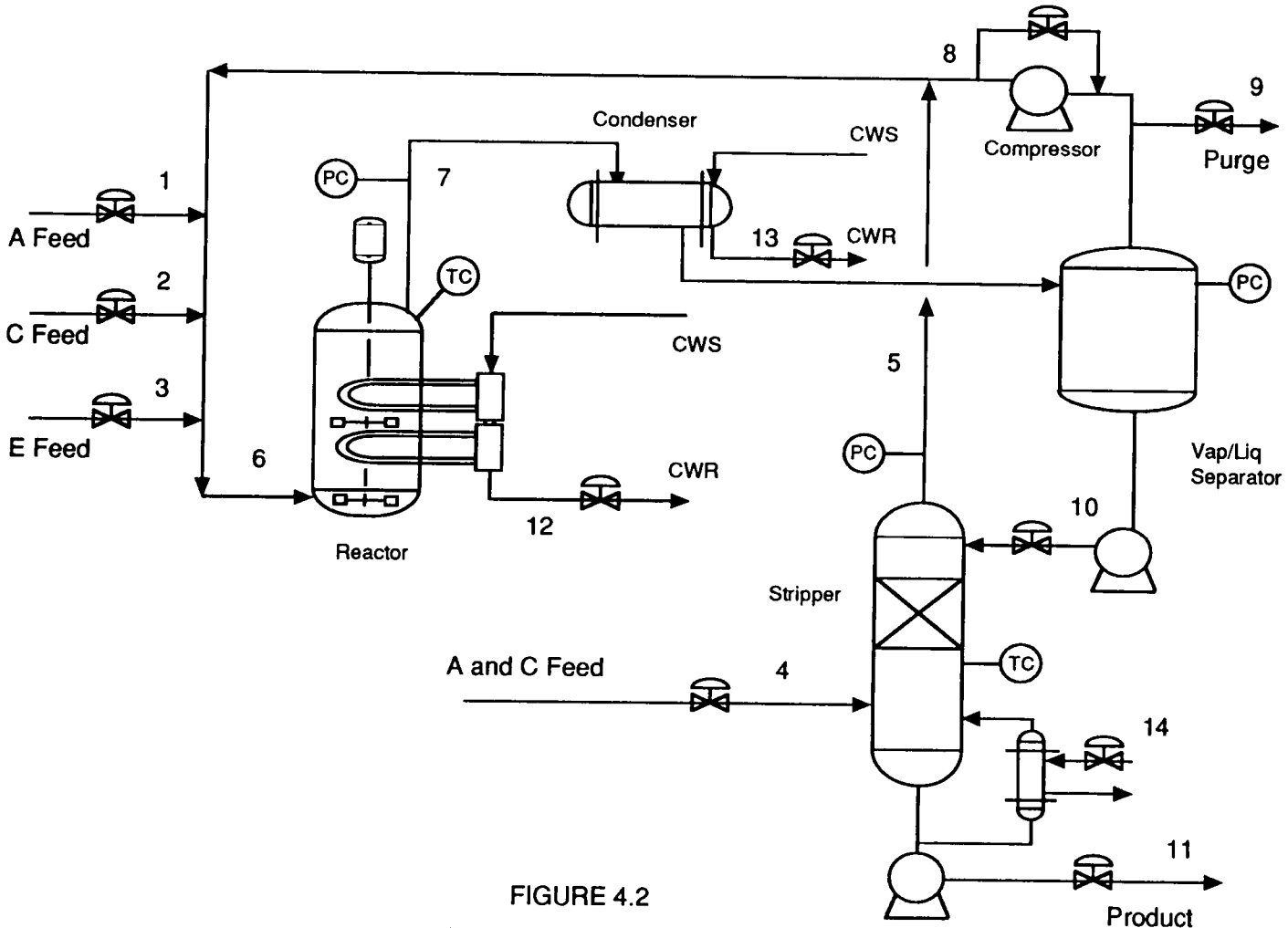

FIGURE 4.2
Process 2 Flowsheet

Stream Name	A Feed	D Feed	E Feed	C Feed	Strp Ovhd	Reac Feed
Stream Number	1	2	3	4	5	6
Molar Flow	11.2	114.5	98	417.5	465.7	1890.8
Mass Flow	22.4	3664	4509.3	6419.4	8979.6	48015.4
Temperature	45	45	45	45	65.7	86.1
Mole Fractions						
A	0.99990	0.00000	0.00000	0.48500	0.43263	0.32188
B	0.00010	0.00010	0.00000	0.00500	0.00444	0.08893
C	0.00000	0.00000	0.00000	0.51000	0.45264	0.26383
D	0.00000	0.99990	0.00000	0.00000	0.00116	0.06882
E	0.00000	0.00000	0.99990	0.00000	0.07256	0.18776
F	0.00000	0.00000	0.00010	0.00000	0.00885	0.01657
G	0.00000	0.00000	0.00000	0.00000	0.01964	0.03561
H	0.00000	0.00000	0.00000	0.00000	0.00808	0.01659

FIGURE 4.3

Process 2 Operating Condition

Stream Name	Reac Prod	Recycle	Purge	Sep Liq	Product
Stream Number	7	8	9	10	11
Molar Flow	1476	1201.5	15.1	259.5	211.3
Mass Flow	48015.4	30840	386.5	16788.9	14228.6
Temperature	120.4	102.9	80.1	80.1	65.7
Mole Fractions					
A	0.27164	0.32958	0.32958	0.00000	0.00479
B	0.11393	0.13823	0.13823	0.00000	0.00009
C	0.19763	0.23978	0.23978	0.00000	0.01008
D	0.01075	0.01257	0.01257	0.00220	0.00018
E	0.17722	0.18579	0.18579	0.13704	0.00836
F	0.02159	0.02263	0.02263	0.01669	0.00099
G	0.12302	0.04844	0.04844	0.47269	0.53724
H	0.08423	0.02299	0.02299	0.37136	0.43828

FIGURE 4.3 (continued)

components recycle back to the reactor after passing through a centrifugal compressor. By-products and the inert leave the separator in the vapor overhead and the remaining materials proceed to the stripper. The stripper removes any remaining reactants (for eventual return to the reactor) and produces the product.

The measurement system for this process is more complicated than that of the first process. Temperature, level, and flow measurements are available on-line. Off-line analyzers provide composition measurements. The analyzers on stream 6 and stream 9 operate with a sampling frequency of 0.1 hours and dead time of 0.1 hours. The analyzer on stream 11, the product stream, operates at a sampling frequency of 0.25 hours with a dead time of 0.25 hours.

4.2 Control System Design

Control system design must proceed in a logical manner through various phases to produce an effective control strategy. These steps include (1) definition of operating objectives, (2) determination of inventory controls (both bulk and component), (3) sensor selection, and (4) controller pairings.

4.2.1 Plant Operating Objectives

Effective design of a control system requires knowledge of the plant operating objectives; ideally these objectives should be clear and detailed. For example, the control system designer should know (1) end-product specifications, (2) intermediate variable specifications, (3) acceptable variation of end-products and intermediate variables, (4) material and energy sources, and (5) information about any streams within the plant that impact other

processes. This information enables the designer to effectively locate variation within the plant.

In this work, specification of operating objectives is slightly different for the two processes. For process 1, the objectives represent typical operating conditions. Process 2 has more detailed operating objectives; this plant comes with a pre-specified cost function that takes into account all utilities and product variability costs.

The operating objectives for process 1 were based on balancing variation between measured variables and manipulated variables. The cost of variation in some measured variables is apparent; variation in a final product results in a lowered market value. However, for many measured variables, the cost of variability is not easily quantified; for example, the cost of variation in a liquid level cannot be quantified. The most important measured variable is the bottoms composition. The other two measured compositions are not as important, but variations in reactor outlet composition would disturb column operation. Therefore, minimizing variation in reactor outlet composition is more important than minimizing variation in distillate composition. Variation in liquid levels is not considered costly. The cost of variation in some manipulated variables, such as steam flow, can be specified. The cost of variation in other measured variables, such as cooling water flow, is not obvious. For this process, the manipulated variables were divided into two groups, based on the impact of variation in these variables. Distillate, bottoms, and column feed comprise the group whose variation should be minimized. Steam flow, fresh feed, and reflux comprise the group whose variation is not quite as significant.

The operating objective of process 2 is to minimize operating costs. The

operating costs were specified by the problem creators.

$$\begin{aligned}\text{Operating costs} = {} & (\text{product stream costs})(\text{product rate}) \\ & + (\text{compressor costs})(\text{compressor work}) \\ & + (\text{steam costs})(\text{steam rate}) \\ & + (\text{purge costs})(\text{purge rate})\end{aligned}$$

The product stream costs and purge costs are dependent on the amount of reactants wasted and the amount of by-product produced.

4.2.2 Inventory Control

Within a plant, many inventories must be controlled to maintain safe and effective operation. Control of bulk inventories and component inventories is crucial. Bulk inventories are liquid levels and vapor holdups. These inventories are usually easy to identify and they must be controlled to maintain overall material balances. In contrast, component inventories can be located in recycle streams or units and can be difficult to identify. However, control of component inventories is critical to process operation. Component inventory tables are tools that can guide component inventory control.

In this work, the control of component inventories is guided by component inventory tables. The tables indicate the inventories that must be controlled via the control system and those that naturally self-regulate. The tables are dependent on the chosen system boundaries. Consequently, several tables are necessary to effectively evaluate each process. (Particular care will be taken concerning inventories in any "critical" unit operations.) The tables also aid in enumerating potential manipulated variables. This approach eliminates many control strategies from the list of all possible control strategies.

4.2.3 Sensor Selection

There are several aspects involved in sensor selection. The first involves determination of the variables within a plant that determine the quality of the product. Often, the variables that represent quality are not available as on-line measurements. When this is the case, it becomes important to identify secondary variables that can be used to infer quality. An example of the use of secondary variables is temperature measurement in distillation column control; composition is the quality variable, but it is not widely available on-line. To infer the quality, temperature measurements are made that ideally allow one to maintain quality in the column. Statistical analysis tools such as principal component analysis and partial least squares can be used to infer unavailable or infrequent process measurement from available sensor information. These tools build empirical models between the two sets of variables.

Another aspect of sensor selection is degrees-of-freedom. Frequently processes have more available measurements than degrees-of-freedom. In this case, it is important to reduce the dimensionality of the control problem. There are two options available for doing this: (1) select a reduced number of sensors and (2) combine the information from several sensors. The first option can be achieved by employing steady-state analysis tools to select sensors. The second option involves using statistical analysis tools to approximate some unmeasured (or infrequently measured) variable from the data of several sensors.

A related aspect of sensor selection involves the implementation of statistical process control charts. Infrequently measured variables that are measures of quality, and are sensitive to disturbances, should be considered for

use with an SPC chart. These charts can be used in a supervisory capacity to update setpoints, stream ratios, or any other externally determined control variable.

For process 1, the potential controlled are specified to be bottoms composition and distillate composition. While it is currently impractical in the real world to use composition analyzers for closed-loop feedback control, this work assumes that the column is futuristic and thus has this ability. Typically, temperature measurements would be selected for control. This could be done by using SVD to analyze the steady-state gains associated with the available measurements.

After the question of sensor locations has been answered, it must be decided which of these variables will be controlled. For process 1, this amounts to answering whether to do dual-ended control or single-ended control on the column. Relative control gain and relative disturbance gain values can be used to address this issue. For the important quality variables within the plant (bottoms composition for process 1), the RCG value should be between negative one and one. A value outside this interval indicates that the other controller (or controllers) are forcing more variation into this variable. This situation is undesirable and care should be taken to identify the offending control loop (or loops) and consider not utilizing them. Similarly, value for the RDG outside of the negative one to one interval for key manipulated variables are also not desirable. In considering whether to control all of the potential controlled variables, one must keep in mind the issues of unit operating and plant safety and stability (including the control of component inventories).

4.2.4 Strategy Selection

Once controlled variables have been selected, it is necessary to pair these variables with manipulated variables. This pairing should be done to maximize the control leverage and minimize process operating costs. It should also consider the location of variation within the plant. Singular value decomposition has traditionally been applied to evaluate the strength of effect of manipulated variables on measured variables. In this work, SVD is extended to consider the impact of disturbances on measured variables and manipulated variables. This extension yields information about the transformation of variation.

The traditional determination of steady-state gains involves perturbing selected manipulated variables and determining the resulting change in the measured variables. These gains are mathematically expressed as

$$k_{ij} = \frac{\partial x_i}{\partial m_j}\Big|_{m_k=0,k\neq j}$$

where

x_i is the ith measured variable and

m_j is the jth manipulated variable.

This approach requires specification of an inventory control structure prior to steady-state gain calculation. For an individual unit operation or a small plant, specifying the inventory controls may not be a problem; there may be only four or five potential control strategies to evaluate for a unit or small plant. However, with the inclusion of ratio control strategies or the extension to a large plant, evaluation of all possible control strategies becomes a monumental task.

A steady-state gain determination method that removes the restriction of apriori inventory controls would reduce the work involved in a steady-state analysis. Papastathopoulou and Luyben (49) discuss such an approach. The method they present calculates an inverse of the traditional steady-state gain

$$k'_{ji} = \frac{\partial m_j}{\partial x_i}\Big|_{x_k=0,k\neq i}$$

where

x_i is the ith measured variable and

m_j is the jth manipulated variable.

This gain represents the ratio of the change in the manipulated variables for a change in a controlled variable. This type of gain calculation does not require prior specification of inventory controls. It essentially transforms the gain determination into a design problem. The resulting gains yield information on how much the manipulated variables would have to change to accommodate a change in design specification (a change in target value for a measured value).

From these closed-loop gains ("design" gains), the gains for various potential second-level control strategies can be determined. Consider a two-input two-output system represented by (in terms of deviation variables)

$$\begin{bmatrix} x_1 \\ x_2 \end{bmatrix} = \begin{bmatrix} k_{11} & k_{12} \\ k_{21} & k_{22} \end{bmatrix} \begin{bmatrix} m_1 \\ m_2 \end{bmatrix}$$

This equation can be rewritten as

$$\begin{bmatrix} m_1 \\ m_2 \end{bmatrix} = \begin{bmatrix} k'_{11} & k'_{12} \\ k'_{21} & k'_{22} \end{bmatrix} \begin{bmatrix} x_1 \\ x_2 \end{bmatrix}$$

where k'_{ij} is the i,j element of K^{-1}. If x_2 is held constant and x_1 is perturbed,

$$\begin{bmatrix} m_1 \\ m_2 \end{bmatrix} = \begin{bmatrix} k'_{11} & k'_{12} \\ k'_{21} & k'_{22} \end{bmatrix} \begin{bmatrix} x_1 \\ 0 \end{bmatrix}$$

The elements of the first row of the K^{-1} matrix can be calculated from

$$\begin{bmatrix} k'_{11} \\ k'_{21} \end{bmatrix} = \begin{bmatrix} m_1 / x_1 \\ m_2 / x_2 \end{bmatrix}$$

The other two elements of the K^{-1} matrix can be calculated from a similar perturbation of x_2 while holding x_1 constant. Taking the inverse of this matrix yields the steady-state gain matrix representing the open-loop impact of changes in the manipulated variables on the measured variables.

Calculation of "design" gains does not require specification of a level control strategy. However, if the process is not sufficiently specified (i.e. more manipulated variables than the number of control loops) there will be an infinite number of solutions. In this case, an optimization would be necessary to determine the "best" solution.

4.2.5 Transformation of Variation

The primary thrust of this work is in the area of transformation of variation. Controller pairings affect the transformation of variation within the process. To address this issue, two sets of gains were calculated and analyzed. The first gains evaluated consider the impact of disturbances on controlled variables. These gains represented by

$$k_{d_{ij}} = \left. \frac{\partial x_i}{\partial d_j} \right|_{m_k = 0}$$

where

x_i is the ith controlled variable;

d_j is the jth disturbance variable; and

m_k is the kth manipulated variable.

These gains provide information about the transformation of variation to controlled variables with only level controllers active. This information provides insight into the natural variation transformation properties of the process.

A second set of disturbance gains considered look at the impact of disturbance on the manipulated variables when the controlled variables are held constant

$$\left.\frac{\partial m_i}{\partial d_j}\right|_{x_k=0}$$

where

m_i is the ith manipulated variable;

d_j is the jth disturbance variable; and

x_k is the kth controlled variable.

Pairing should be done so the variables that must move a lot to compensate for disturbances are paired with inventories. This way, the manipulated variables moving the most to compensate for a disturbance are not paired with quality control variables.

The gains discussed here, along with those discussed in section 4.2.4 are all that is needed to apply the analysis tools described in Chapter 3. The gains discussed here are valuable for control system analysis. They provide important information concerning the transformation of variation within the plant. The sensitivities of the controlled and manipulated variables to disturbances can be evaluated to address propagation of variation. This information could be

used to re-evaluate a current control system or in the design of a new control system.

In addition to considering the extreme cases of all second-level (non bulk inventory) controllers in manual or all second-level controllers in automatic, the impact of disturbances on the process when some controllers are in automatic and others in manual should be considered. The information in the RDG and RCG can be useful in identifying whether controllers should be in automatic or manual. The RCG is particularly useful in identifying when other controllers active in the control system increase variation in the key controlled variables.

In this work, the information in the RDG will also be utilized differently than previous uses. Consideration is given to the magnitude of the numerator and the denominator, in addition to looking at the ratio of the two. While looking at the ratio of the two provides a measure of the difference between SISO and MIMO control, it does not provide any information about the magnitude of the impact of the disturbance on the control system.

It is desirable that a control strategy have a low value for the numerator and the denominator of the RDG. A strategy may have a good RDG (between negative one and one) while having poor disturbance rejection properties (large values for both gains). Conversely, a strategy may have a poor RDG while actually having promising disturbance rejection properties (small values for both gains).

The numerator of the RDG represents the impact of the disturbance on the manipulated variables if perfect disturbance rejection were achievable. A weighted summation of these values for the control loops of interest offers an overall measure of disturbance rejection if all variation is transformed to the

manipulated variables. The information in the denominator is a measure of the manipulated variable movement necessary to reject the disturbance if only the loop of interest is active. A weighted summation of these values for the active controllers provides a measure indicative of the manipulated variable movement necessary to reject the disturbance if each controller had the responsibility of doing it alone. This number may underestimate the movement necessary to reject a disturbance if the RDG values are greater than one. On the other hand, this number may overestimate the movement if the RDG values are significantly smaller than one. The weighted summation of disturbance sensitivities considered for each strategy depends on the status of the composition controllers (automatic/manual). The value for the RDG numerator will be used for strategies that control both compositions. For strategies that control only one composition, the appropriate RDG denominator value will be weighted and used to measure the manipulated variable changes resulting for a given disturbance.

For process 1, the control strategy will be two-by-two. For this system, it is easy to calculate the gains comprising the RDG and RCG from open-loop gains. If the system is described by

$$\begin{bmatrix} x_1 \\ x_2 \end{bmatrix} = \begin{bmatrix} k_{11} & k_{12} \\ k_{21} & k_{22} \end{bmatrix} \begin{bmatrix} m_1 \\ m_2 \end{bmatrix} + \begin{bmatrix} k_{d_1} \\ k_{d_2} \end{bmatrix} [d]$$

The numerator of the RDG is equal to

$$\left.\frac{\partial m_1}{\partial d}\right|_{x_1,x_2} = \frac{k_{12}k_{d_1}/k_{22} - k_{d_1}}{k_{11} - k_{12}k_{21}/k_{22}}$$

The denominator of the RDG is equal to

$$\left.\frac{\partial m_1}{\partial d}\right|_{x_1,m_2} = \frac{-k_{d_1}}{k_{11}}$$

The information contained in the RCG is employed to complement the information contained in the RDG. The weighted sum of the closed-loop gains (numerator of the RCG) provides a measure of impact of a disturbance on the controlled variables if all other controlled variables are held at set point. A weighted sum of open-loop gains (denominator of the RCG) measures the impact of a disturbance on the controlled variables if no variation is transformed to manipulated variables. The RCG numerator can be calculated from

$$\left.\frac{\partial x_1}{\partial d}\right|_{m_1,x_2} = k_{d_1} - \frac{k_{d_2}k_{12}}{k_{22}}$$

And the RCG denominator is simply

$$\left.\frac{\partial x_1}{\partial d}\right|_{m_1,m_2} = k_{d_1}$$

For a two-input two-output system, the closed-loop gain of the RCG (the numerator) contains information associated with the open-loop gain of the RDG (the denominator); the numbers represent the impact of the disturbance on two different variables under the same conditions. These numbers are an indication of the variation transformation properties if only one control loop is active. A combination of these numbers can identify control strategies that have favorable disturbance rejection properties, with regard to the overall operating objective of the plant.

4.2.6 Dynamic Studies

Dynamic studies were performed to evaluate the effectiveness of the steady-state analysis tools at identifying poor control strategies. For process 1, persistent, random feed composition and production rate disturbances were considered. To remove some of the subjectivity of results on controller tuning, the composition controllers were tuned to minimize an objective function representing the plant operating objectives

$$\Phi = \sum_{i=1}^{px} w_{x_i} \int_0^t \left(x_i - x^{set}\right)^2 dt + \sum_{i=1}^{pm} w_{m_i} \int_0^t (\Delta m_i)^2 dt$$

where

px is the number of controlled variables;

pm is the number of manipulated variables;

w_{x_i} is the weight for controlled variable *i*; and

w_{m_i} is the weight for manipulated variable *i*.

Table 4.3 shows the weights used to represent the operating objectives.

The variability in the measured variables were measured by calculating the sum of squared errors of the data

$$SSE_{x_i} = \sum (x_i - \bar{x}_i)^2$$

This measure is directly analogous to the standard deviation of the measured variables, which is given by

$$s_{x_i} = \sqrt{\frac{\sum (x_i - \bar{x}_i)^2}{n-1}}$$

And the relationship between the two is

$$SSE_{x_i} = (n-1)s_{x_i}^2$$

TABLE 4.3

Variable Weights for Objective Function

Variable	Weight
Measured Variables:	
Mole fraction J in Bottoms	0.7
Mole fraction J in Distillate	0.1
Mole fraction J in Reactor Effluent	0.2
Manipulated Variables:	
Fresh Feed	60
Column Feed	150
Column Bottoms	150
Column Distillate	150
Column Reflux	60
Column Heat Input	60

However, in a strict sense, is only appropriate to talk of standard deviation for roughly normally distributed variables, and it is unlikely that process data meets this criterion. The variation in the manipulated variables is measured by

$$SSU_{\Delta m_i} = \sum (\Delta m_i - \Delta m_i)^2$$

which is analogous to the standard deviation given by

$$s_{\Delta m_i} = \sqrt{\frac{\sum (\Delta m_i - \Delta m_i)^2}{n-1}}$$

The sum of squared errors and sum of squared valve movements were scaled to represent the physical situation.

4.3 Study Overview

This study incorporates the ideas of transformation of variation and component inventory control in control system design. Disturbances, and the resulting variations, can create operational difficulties if not managed effectively. A control system should strive to manage variation in a way that meets the operating objectives of the plant in the most cost effective manner. To achieve this goal, the designer must first realize that this is the goal and second employ tools that will guide the design toward this end.

Variation that enters a plant can locate in one of four places: (1) measured variables, (2) manipulated variables, (3) inventories, and (4) dynamics. The most benign of these possible locations is inventories. However, in today's competitive environment, a premium is placed on minimizing surge capacity. Consequently, inventories are not available to dampen disturbances. Dampening variation through dynamics can be an effective management strategy; however, there is not much that can be done to

affect the dynamics at the control system design stage. In general, the control system designer is left with balancing variation in measured variables with that in manipulated variables. Understanding the natural transformation tendencies of the plant is critical to control system design.

Steady-state analysis tools are used to evaluate two processes. Component inventory tables help enumerate potential control strategies. Several analysis tools are used to pair controllers and screen poor control strategies. These tools include SVD, RGA, RDG, RCG, and disturbance condition number.

Steady-state analysis tools guide control system design and evaluation of the performance of control systems. After an initial enumeration of potential control strategies, several tools are employed to eliminate poor strategies. The first level of screening involves component inventory tables. Through use of these tables, strategies that do not maintain control of all component inventories are identified. Disturbance analyses are employed to differentiate between the strategies based on propagation of variation. The RCG is used to determine the status of the controllers in the process so that the operating objectives are best met. RDG and disturbance condition number identify variation propagation patterns in manipulated variables. The relative importance of variables is used with the RDG analysis. The disturbance sensitivities that comprise the RDG and the RCG are weighted and summed to measure the transformation of variation within the plant. Finally, dynamic studies are performed to evaluate the effectiveness of the analysis tools.

CHAPTER 5

PROCESS 1 RESULTS

Control strategies for two processes have been studied with the steady-state analysis tools described in chapter 3. This chapter presents the results for process 1. The focus of the analysis was the transformation of variation properties of the process and the control strategies. The tools are intended to be a screening method, not a way to identify the best strategy. Strategies with poor steady-state properties seldom have good dynamic responses. In contrast, strategies with good steady-state properties may have poor responses due to dynamics. For each process, typical disturbances were considered and various control strategies were analyzed. Dynamic studies were performed to evaluate the ability of the steady-state analysis tools to eliminate poor strategies.

5.1 Inventory Control

Two component inventory control tables were constructed for process 1. Figure 5.1 displays the table for the entire process. From this table it becomes apparent that many strategies are going to rely on the reaction rate to regulate a component inventory. Component J inventory must be controlled by the fresh feed rate or the rate of reaction. If the fresh feed rate or bottoms flow rate is set for production rate, any changes in the feed composition must, at steady-state, be reflected in the reaction rate. This feature puts a different light on the chosen control objectives of the plant (bottoms composition and distillate composition). The reaction rate is a function of many things including inlet concentration, inlet flow rate, reactor holdup, and conversion. If the distillate composition is allowed

Component	Input	Generation	Output	Consumption	Accumulation
J	F0	---	B (~0)	Reaction	F0 or Reaction
K	F0	Reaction	B	---	F0 or Reaction

Figure 5.1
Component Inventory Table - Process 1

to float, any composition disturbances would be reflected back to the reactor, where the reaction rate would regulate the component inventory. This is a contrast to the idea that dual-ended control (control of both the distillate composition and bottoms composition) of the column is better than single-ended control (control of only one product composition) of the column.

Figure 5.2 shows a component inventory table for the column alone. This analysis demonstrates that some strategies could have difficulty regulating both component inventories. If column feed rate is set for production and either distillate rate of bottoms rate is held constant (for example, if one of the composition controllers is inactive), the component inventories will not be controlled. Furthermore, if any of the three streams flowing into or out of the distillation column is set for production, and any one of the other two is constant (due to an inactive controller), the component inventories within the column will integrate. In other words, if distillate flow or bottoms flow is used to control production rate, and either of the flows external with respect to the column (distillate, bottoms, column feed) is held constant, the component inventories in the column will integrate.

Table 5.1 displays twelve potential control strategies; this list is not exhaustive, but instead a selection of the vast number of possible strategies. There are four options for production rate control: fresh feed rate, column feed rate, distillate flow, and bottoms flow. There are three options listed for each of these methods of production control. To illustrate the meaning of strategies shown in Table 5.1, two configurations will be shown. Figure 5.3 displays the configuration for strategy 1. This strategy uses the fresh feed rate to determine production, the column feed flow to control reactor level, the bottoms flow to

Component	Input	Generation	Output	Consumption	Accumulation
J	F	---	D and B (~0)	---	D or F
K	F	---	D and B	---	D, B, or F

Figure 5.2
Component Inventory Table - Column Alone

TABLE 5.1

Process 1 Control Strategies

Strategy	Prod	RL	BL	AL	TC	BC
1	F0	F	B	L	D	Q
2	F0	D	B	L	Q	F
3	F0	D	B	Q	L	F
4	B	F0	F	L	D	Q
5	B	F0	Q	D	L	F
6	B	F0	F	D	L	Q
7	F	F0	B	L	D	Q
8	F	F0	B	D	L	Q
9	F	F0	Q	D	L	B
10	D	F0	B	L	Q	F
11	D	F0	F	L	Q	B
12	D	F0	B	Q	L	F

Prod - Production Rate
RL - Reactor Level
BL - Base Level
AL - Accumulator Level
TC - Distillate composition
BC - Bottoms composition

F0 - Fresh Feed Rate
F - Column Feed Rate
B - Column Bottoms Rate
D - Column Distillate Rate
L - Column Reflux Rate
Q - Reboiler Energy Input

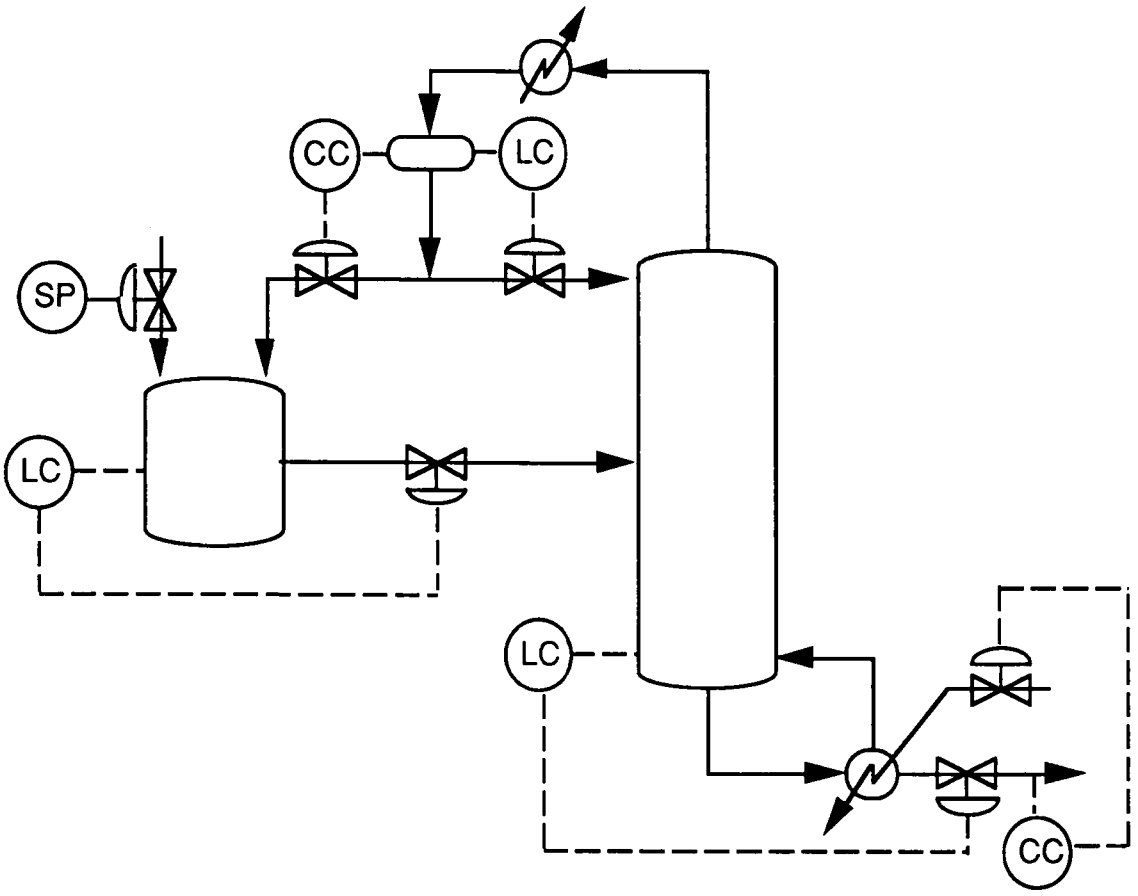

FIGURE 5.3

Control Configuration - Strategy 1

control the column base level, and the reflux flow to control the accumulator level drum level. The distillate composition is controlled by manipulating the distillate rate and the bottoms composition is controlled by manipulated the energy input to the reboiler. Figure 5.4 displays the configuration for strategy 9. Strategy 9 set production with the column feed, controls reactor level with fresh feed rate, bottoms level with energy input to the reboiler, and accumulator level with distillate flow. The distillate composition is controlled by manipulating the reflux flow rate and the bottoms composition is controlled by manipulating the bottoms flow rate.

Strategies 1, 4 and 7 can exhibit a component integrating response if the distillate composition controller is not active. Each of these strategies utilizes distillate flow to control distillate composition. If the distillate flow is set on flow control, the column will be unable to handle a large feed composition disturbance. Since the external material balance will be set, the column continues to reflect the disturbance back onto itself through changes in reflux flow and boilup. Strategies 9 and 11 can exhibit component integrating responses if the bottoms composition controller is in manual. Each of these two strategies uses bottoms flow rate to control bottoms composition. If the bottoms rate is set on flow control while distillate or column feed is set to control production, a disturbance in composition can produce an integrating response in the component inventories. Strategies 5, 9, 10, 11, and 12 can also have problems if the bottoms composition controller is in manual. These strategies use column feed to control bottoms composition and bottoms flow rate or distillate flow rate to control production rate. Thus with the bottoms composition controller not active,

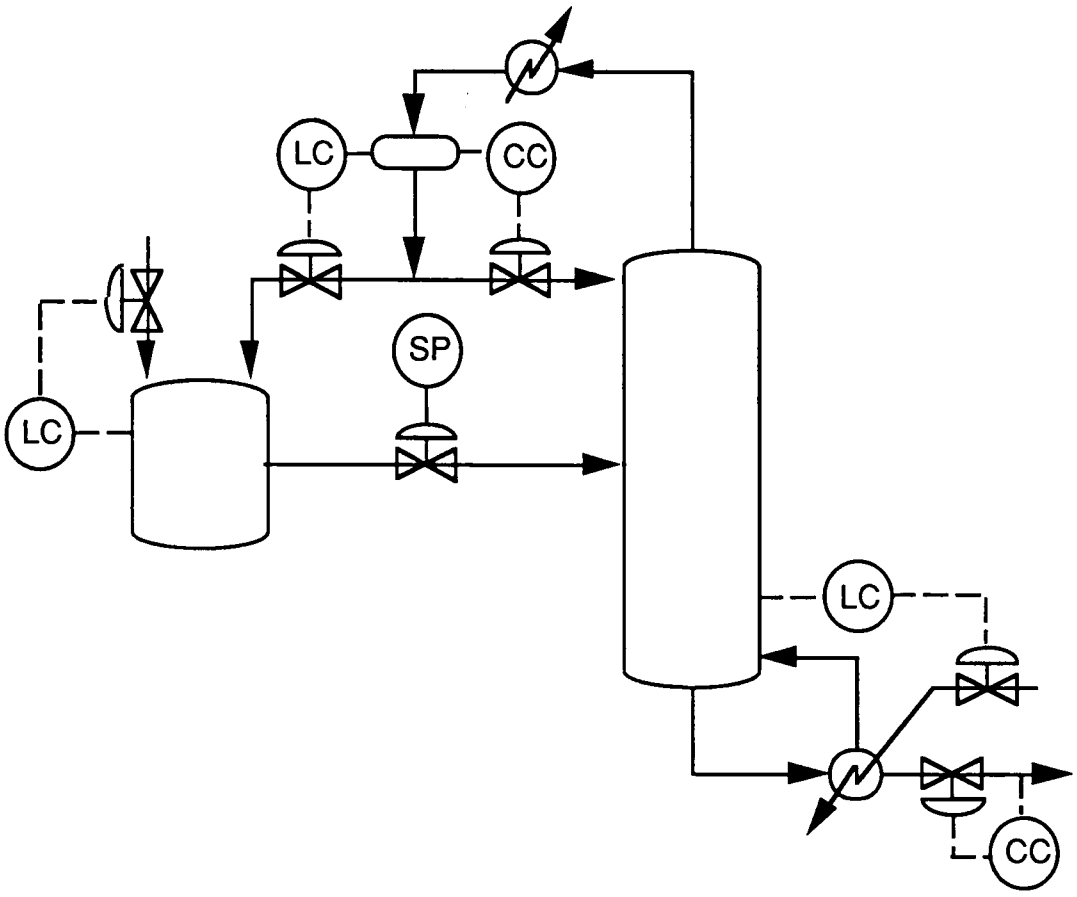

FIGURE 5.4

Control Configuration - Strategy 9

the material balance around the column is fixed and composition disturbances can be a big problem.

Control strategy selection should proceed with these considerations in mind. The component inventories within the plant must be controlled. Options that lead to strategies that do not control component inventories are inadequate, regardless of their other characteristics.

5.2 Traditional SVD Analysis

For each strategy, open loop disturbance gains and closed-loop "design" gains were calculated. The "design" gains were used to find the open-loop measured variable-manipulated variable gains for the individual two-by-two systems. Figure 5.5 displays the design gains when fresh feed rate is set for production. The entries in this matrix are the gains given by

$$k'_{ij} = \left(\partial m_i / \partial x_j\right)_{x_k=0, k\neq j}$$

The gains indicated with an asterisk are those for strategy 1. Figure 5.6 shows the two-by-two matrix formed from these gains and the resulting inverted matrix that contains the standard open loop gains. These gains are represented by

$$k_{ij} = \left(\partial x_i / \partial m_j\right)_{m_k=0, k\neq j}$$

Williams (65) performed a thorough analysis of the SVD and RGA for the various control strategies. The SVD analysis was performed on performance-weighted gains that incorporated the overall plant operating objectives in the analysis. Table 5.2 displays these results. The strategies with the lowest condition numbers are 1, 2, 4, 7, 11; strategies 6, 8, 9, and 12 had large condition numbers. Several strategies, 3, 5, 9, 10, 11, and 12, had apparently large two-

	Bottoms Composition	Distillate Composition
Reactor Product Flow	-0.2373	-0.1157
Reflux Flow Rate	-1.4936	0.3891
Bottoms Flow Rate	0.0	0.0
Steam Temperature	-0.3983*	0.0653*
Distillate Flow Rate	-0.4555*	-0.2215*

FIGURE 5.5

"Design" Gains with Fresh Feed Production Control

$$K^{-1} = \begin{bmatrix} -0.3983 & 0.0653 \\ -0.4555 & -0.2215 \end{bmatrix} \qquad K = \begin{bmatrix} -1.8773 & -0.5535 \\ 3.8612 & -3.3735 \end{bmatrix}$$

Where

$$\begin{bmatrix} x_{J_B} \\ x_{J_D} \end{bmatrix} = \begin{bmatrix} K_{11} & K_{12} \\ K_{21} & K_{22} \end{bmatrix} \begin{bmatrix} Q \\ D \end{bmatrix}$$

FIGURE 5.6

Gains for Strategy 1

TABLE 5.2

Traditional Steady-state Gain Analysis Results

Strategy	λ	κ
1	0.751	1.88
2	0.751	2.76
3	0.342	15.81
4	0.674	3.87
5	0.330	15.85
6	4.625	49.90
7	0.604	10.26
8	7.249	92.87
9	0.425	45.73
10	0.437	17.66
11	0.455	6.54
12	0.449	80.78

λ - Relative gain

κ - Condition number

TABLE 5.3

Dynamic Performance Measure

Strategy	Φ	Response Description
1	0.119	OK; oscillatory return to SP
2	0.670	Bad; dynamics
3	0.384	Bad; interactions
4	0.135	OK; slow
5	0.119	x_D not returned to SP
6	0.068	x_D not returned to SP
7	0.027	Good
8	0.029	x_D not returned to SP
9	0.017	x_D not returned to SP
10	0.022	x_D not returned to SP
11	0.062	x_D not returned to SP
12	0.029	x_D not returned to SP

way interaction between the composition controllers as indicated by relative gains less than 0.5. Although this type of analysis is important to determining the ability to achieve the desired control, the concept of variation transformation is not considered in this approach. The response descriptions shown in Table 5.3 are based on the system response to a single step in feed composition. Based on this (and not the value of the objective function), strategy 7 was the best while 1 and 4 had adequate responses. These response descriptions were based on the ability of the control system to keep both the distillate and bottoms composition at set point. Strategies 7, 9, 10, and 12 had the lowest values for the dynamic objective function, but all of these strategies, with the exception of 7, were considered poor because they did not control the distillate composition. From this data, it appears that a different characterization of the process response is necessary. This characterization should be based on managing variation in the plant, regardless of the status of individual controllers. Such an approach would shift the focus from individual controllers to the overall process response.

5.3 Production Rate Control

When comparing alternative production control methods, two measures of manipulated variable movement can be evaluated. The first addresses the manipulated variables movement necessary to reject the impact of the disturbance on the controlled variables. This measure is given by

$$\sum_{i=1}^{5} w_{m_i} \left| \left(\partial m_i / \partial d_j \right)_{c_k = 0} \right|$$

The second measures evaluates the necessary manipulated variable movements necessary to achieve a desired set point change in a controlled variable, given by

$$\sum_{i=1}^{5} w_{m_i} \left| \left(\partial m_i / \partial c_j \right)_{c_k = 0, k \neq j} \right|$$

Table 5.4 displays these values for each of the four production control methods. Two disturbances, fresh feed composition and production rate, were considered. Additionally, changes in the bottoms composition and distillate composition controller set points were made. Manipulated variable changes required to reject a feed composition changes are least when column feed rate is set to control production. The changes required when distillate rate is set for production are also lower than when fresh feed rate or bottoms rate is set for production rate control. Using distillate for production rate control offers the lowest manipulated variable movement to reject a production rate disturbance, followed by column feed rate, bottoms rate, and fresh feed rate respectively.

Manipulated variable movement necessary to achieve a change in bottoms composition is least when distillate rate is set for production control. Setting column feed rate for production is the next best alternative, in terms of manipulated variable changes, followed by fresh feed rate and bottoms rate. The results are different for a change in distillate composition set point. The least movement in vales is required when fresh feed rate or bottoms rate is set to control production. The changes are larger when distillate rate or column feed rate are set for production rate control. Since the results conflict, the values for each controlled variable could be weighted (based on the importance of each controlled variable) and added to obtain an overall measure. Based on this overall measure, using distillate rate to control production is best, followed by column feed rate, with fresh feed rate and bottoms rate being significantly worse

TABLE 5.4

Weighted Manipulated Variable Gains

Production	$\sum_{i=1}^{5} w_{m_i} \left\lvert (\partial m_i / \partial x_{F0})_{x_B, x_D=0} \right\rvert$	$\sum_{i=1}^{5} w_{m_i} \left\lvert (\partial m_i / \partial Prod)_{x_B, x_D=0} \right\rvert$	$\sum_{i=1}^{5} w_{m_i} \left\lvert (\partial m_i / \partial x_B)_{x_D=0} \right\rvert$	$\sum_{i=1}^{5} w_{m_i} \left\lvert (\partial m_i / \partial x_D)_{x_B=0} \right\rvert$
F0	0.21455	3.98433	0.81901	0.28275
B	0.21362	3.48545	0.81901	0.28275
F	0.15383	2.04435	0.53501	0.42897
D	0.19234	1.37730	0.22707	0.51359

from the perspective of manipulate variable movement necessary to achieve the desired change.

5.4 Process 1 - Feed Composition Disturbance

For the reactor/column module, two disturbances were considered. The first disturbance was a change in composition of the fresh feed. The second was a change in production rate.

5.4.1 Disturbance Analysis

To perform an analysis directed toward the management of variation, disturbance gains must be calculated. Open-loop disturbance gains were calculated for the process. The gains for a feed composition disturbance provide little differentiation between strategies for this process; the gains are identical for all strategies, with two exceptions. The open-loop disturbance gains for strategies 6 and 8 differ from the gains of the other strategies. An overall material balance on component J is useful is explaining these results

$$(x_J)_{F0}F0 - k^*(x_J)_F - (x_J)_B B = 0$$

where k^* is the specific reaction rate constant equal to 426.1 lbmol/hr. The last term in this equation is approximately zero because the mole fraction of J in the bottoms stream is close to zero, so the equation can be written as

$$(x_J)_{F0}F0 - k^*(x_J)_F = 0$$

From this equation, it is apparent that if the fresh feed rate (or the bottoms rate) is set to control the production rate, any change in the fresh feed composition must

be reflected in the reactor outlet composition. If the J component balance around the column is also considered

$$(x_J)_F F - (x_J)_D D - (x_J)_B B = 0$$

the impact of changes in the reactor product (column feed) composition on the distillate and bottoms compositions can be seen. All strategies that fix any two of the material flow variables around the column (feed, distillate, bottoms), when the composition controllers in manual, will have the same open-loop disturbance gains. Once two of the variables are fixed, the third is fixed by the overall material balance around the column. Only strategies 6 and 8, which use an LQ strategy on the column, do not fix two of these variables in this situation. For strategy 8, the impact of a fresh feed composition disturbance on the column feed disturbance is less than for other strategies since the fresh feed rate will change. Strategy 6 also has smaller open-loop gains than the majority of the strategies due to the column feed rate and distillate rate changing and thereby reducing the impact of the disturbance on the bottoms composition and the distillate composition.

Table 5.5 displays the disturbance condition number, maximum singular value and disturbance index. Strategies 4, 6, and 12 had largest disturbance condition numbers, but the values for these strategies were not significantly different than those of the other strategies. No real distinction can be made based on the disturbance condition numbers values. Strategies 6, 7, 8, 9, 10, and 12 have large maximum singular values. This indicates that the movement in the manipulated variables for a disturbance in the "best" direction should be lowest for these strategies. Consideration of the disturbance rejection index indicates that strategies 7, 8, 9, 10, and 12 have the best disturbance rejection

TABLE 5.5

Disturbance Condition Number Analysis -
Feed Composition Disturbance

Strategy	γ_d	σ_{max}	σ_{max}/γ_d
1	2.61	7.36	2.82
2	2.38	12.34	5.18
3	3.22	14.26	4.43
4	5.53	15.10	2.73
5	3.10	14.31	4.62
6	5.94	41.22	6.94
7	2.87	36.11	12.58
8	3.68	69.93	19.00
9	3.26	35.21	10.80
10	3.23	57.75	17.88
11	3.20	20.25	6.33
12	5.32	59.45	11.17

γ_d - Disturbance condition number. Small values are favored.

σ_{max} - Maximum singular value of gain matrix. Large values are favored.

σ_{max}/γ_d - Disturbance rejection index. Large values are favored.

characteristics with regard to manipulated variables. These values assume that dual-ended control will be used, when it may not be in the best interest of the overall transformation of variation. Therefore, these numbers should interpreted after the decision about dual-ended to single-ended control of the column is made for each potential strategy.

Table 5.6 shows the relative disturbance gain values and relative control gain values for both composition control loops. The RDG values show that most strategies have favorable interaction properties with respect to manipulated variable movements necessary to reject the disturbance. Strategies 1, 4, 6, 9, 11, and 12 do have one RDG value greater than one (although the values for strategies 9 and 12 are very close to one). This information indicates that the other control loop is increasing the impact of the disturbance on the loop of interest. While one may consider deactivating the other controller, this may not be rational. If the other controller is maintaining the product composition (as is the case for strategies 1, 4, and 6), deactivating this controller could have a negative impact on product quality. Also, a controller should not be placed in manual if it is responsible for maintaining a component inventory, as is the case with strategies 9, 11, and 12.

The RCG indicates that six strategies, 2, 3, 5, 9, 10, 11, and 12, have an unfavorable interaction (absolute value of RCG greater than one) for the bottoms composition controller. For these strategies, controlling the distillate composition increases the variation in the bottoms composition. This phenomena was supported by the controller tuning. To provide a fair basis for comparison of the dynamic responses of the strategies, the composition controllers were tuned to minimize an objective function that represents the overall plant operating

TABLE 5.6

RDG and RCG Disturbance Analysis -
Feed Composition Disturbance

Strategy	RDG values $\beta(x_d)$	RDG values $\beta(x_b)$	RCG values $\alpha(x_d)$	RCG values $\alpha(x_b)$
1	1.249	0.373	1.657	0.496
2	-0.246	0.626	-0.992	2.521
3	-0.119	0.830	-0.347	2.427
4	1.288	0.401	1.718	0.535
5	-0.108	0.825	-0.343	2.628
6	-0.211	1.425	-0.343	0.525
7	1.006	0.008	1.665	0.014
8	0.828	0.194	0.114	0.027
9	0.025	1.037	0.060	2.472
10	0.065	1.098	0.149	2.515
11	0.094	1.142	0.206	2.512
12	0.066	1.095	0.147	2.454

objectives (as discussed in Section 4.2.6). This tuning procedure essentially deactivated the distillate composition controller for strategies 2, 3, 5, 8, 10, 11, and 12, and tuned it loosely for strategy 9. The RCG predicts the results obtained with the dynamic tuning for all strategies. One additional strategy, 8, also had the distillate composition controller deactivated. However, as mentioned previously, a steady-state measure cannot be expected to identify strategies that have dynamic response difficulties while having good steady-state properties.

If only strategies with RCG values between negative one and one for the bottoms composition controller are considered, the disturbance rejection index would indicate that strategies 7 and 8 have less manipulated variable movement that strategies 1, 4, and 6. The disturbance condition number does not provide a significant differentiation between control strategies. The maximum singular value is better for strategies 6, 7, and 8 than for strategies 1 and 4.

It is important to make the connection between the steady-state measures and the physical situation. Writing steady-state component J mass balances for the entire plant and for the column alone yields

$$F0(x_J)_{F0} - k^*(x_J)_F - B(x_J)_B = 0$$

$$F(x_J)_F - B(x_J)_B - D(x_J)_D = 0$$

The steady-state material balances around the entire plant, the column alone, and the reflux drum are

$$F0 - B = 0$$

$$F - D - B = 0$$

$$V - L - D = 0$$

Two strategies will be used to illustrate the relationship between the steady-state measures calculated and the physical situation. All discussion is limited to variations and changes associated with steady-state behavior; flows constrained by steady-state material balance considerations may vary in a dynamic simulation. For strategy 1, when both the distillate composition and the bottoms composition controllers are in manual, all external flows (fresh feed, column feed, bottoms and distillate) will remain the same. There will be some change in boilup (and consequently reflux) since the energy input to the column is the variable that is held constant, not the boilup. With both composition controllers in automatic, F, D, L, and V can be different from base case, and the variation is distributed among these variables. When the bottoms composition controller is in automatic, only the reflux and boilup can change. In this case, the variation in the distillate composition will be larger than when both controllers are in manual. This can be seen by considering the component J mole balance around the column, more variation is forced into the distillate composition because the bottoms composition must ultimately be at set point and all external flows are held constant (the calculated RCG is 1.657). Also, since D, B, and F are now set, V will change more to obtain the desired separation than in the case where both composition controllers are in automatic. This suggests an RDG less than one (the calculated RDG is 0.373). It should be noted that setting the distillate flow constant can cause a component inventory problem; any change in column feed composition to less than 0.474 will cause a problem because there will not be enough component K present to satisfy the production quantity and quality requirements. When the distillate controller is in automatic, F, D, and L are free to move (Q and B are fixed, V will change some). In this case, less

variation should be transferred to the bottoms composition than when both controllers are in manual because the external material balance will change (the calculated RCG is 0.496). The distillate rate, the manipulated variable associated with the distillate controller, changes less with only this controller active because some of the variation is allowed to exit in the bottoms composition (the calculated RDG is 1.249).

Consider another strategy, 9, which is very different than strategy 1. Strategy 9 uses column feed rate to set production. With both composition controllers in manual, none of the external flows can move to accept variation. With both composition controllers in automatic, all flows rates, except for the column feed, can change. The change in the column feed composition is less with both controllers in automatic than with both controllers in manual because the fresh feed rate will change to counteract some of the impact of the fresh feed composition change. With the bottoms controller in automatic and the distillate controller in manual, the variation in the distillate composition should be less than when the both controllers are in manual because the impact of the fresh feed composition change on the column feed composition is reduced, and the manipulated variables (D, B, and Q) are free to move to compensate for some of the variation (the calculated RCG is 0.0598). Also, the bottoms flow rate change should be less when both controllers are in automatic since the reactor outlet composition will change less (and this change must be reflect in fresh feed rate changes) (the calculated RDG is 1.039). With the distillate controller in automatic and the bottoms controller in manual, the change in the column feed composition should be the same as when both controllers are in manual. However, more variation should be transformed into the bottoms composition than when both

controllers are in manual since the variation is forced out of the distillate composition (the calculated RCG is 2.472). The reflux flow should see more variation in this case than when both controllers are in automatic because it will receive more variation when D and B are constant and because the change in the column feed composition will be greater (the calculated RDG is 0.025). Additionally, with the bottoms composition controller in manual, this strategy will not be able to respond to large change in the fresh feed composition.

To extend the evaluation a step further, the gains that comprise the RDG and the RCG were considered. Table 5.7 shows the weights used for the measured variables and manipulated variables. These weights represent the relative importance of the variables. They were selected such that the maximum sum of the weights in any case was one (i.e. $w_{xb} + w_{xd} = 1.0$ and $w_F + w_D = 1.0$). The manipulated variables were broken into two groups based on relative importance. The first group, column feed rate, distillate rate, and bottoms rate, were given high weights because variation in these flows is undesirable. The fresh feed rate, boilup and reflux flow were given low weights because variation is more acceptable in these variables. For the measured variables, the bottoms composition, the product, was given a much higher weight than the distillate composition.

A weighted sum of the RDG sensitivities was calculated. This value represents the amount of variation created in the manipulated variables of interest. The disturbance sensitivity considered depends on the structure of the control strategy. Figure 5.7 shows the calculation of the weighted sensitivities for strategies 1 and 9. For the dual-ended strategies, the values of the RDG numerators were summed and weighted. For single-ended strategies, the value

TABLE 5.7

Variable Weights for RCG and RDG Analysis

Measured Variables	Weight
Bottoms Composition	0.8
Distillate Composition	0.2
Manipulated Variables	
Fresh Feed Rate	0.25
Column Feed Rate	0.50
Bottoms Rate	0.50
Distillate Rate	0.50
Reflux Rate	0.25
Heat Input	0.25

Strategy 1 - Dual-ended Control

$$\sum a_i(\alpha_i \text{ sensitivity}) = a_{x_b}\left(\partial x_b / \partial x_{F0}\right)_{x_d,Q=0} + a_{x_d}\left(\partial x_d / \partial x_{F0}\right)_{x_b,D=0}$$
$$= 0.8(0.21252)+0.2(2.15251) = 0.6005$$

$$\sum b_i(\beta_i \text{ sensitivity}) = b_Q\left(\partial Q / \partial x_{F0}\right)_{x_b,x_d=0} + b_D\left(\partial D / \partial x_{F0}\right)_{x_b,x_d=0}$$
$$= 0.25(0.083567)+0.5(0.47740)=0.25959$$

Strategy 9 - Single-ended Control

$$\sum a_i(\alpha_i \text{ sensitivity}) = a_{x_b}\left(\partial x_b / \partial x_{F0}\right)_{L,B=0} + a_{x_d}\left(\partial x_d / \partial x_{F0}\right)_{x_b,L=0}$$
$$= 0.8(0.44752)+0.2(0.07558)=0.37313$$

$$\sum b_i(\beta_i \text{ sensitivity}) = b_B\left(\partial B / \partial x_{F0}\right)_{x_b,L=0}$$
$$= 0.5(0.11442)=0.05721$$

FIGURE 5.7

Calculation of Performance-weighted Sensitivities

of the associated RDG denominator was weighted. For strategies with RDG values between negative one and one, this value should be an lower bound on manipulated variable movement. A weighted value for RCG numerators was also created. For the strategies with only one active composition controller, an open-loop disturbance gain was used to evaluate the impact of the disturbance on the bottoms composition. This value was added to the RCG numerator for the distillate composition to obtain a weighted impact of the disturbance on the measured variables. The weighted total of RCG numerators is a measure of the impact of a disturbance on the measured variables.

Table 5.8 displays the weighted RDG sensitivities and the weighted RCG sensitivities. A sum of these two values is also shown; this value represents the total impact of the disturbance on the measured and manipulated variables. Low values for all measures are favored. Based on manipulated variable gains (RDG sensitivity values), strategies 6, 7, 8, 9, 10, and 12 have the lowest total values. Additionally, strategies 1, 2, and 4 have values much larger than the rest of the strategies. Considering the measured variable gains, strategies 6 and 8 have the lowest values, followed by 9, 10, 11, and 12. Strategies 1, 2, and 4 had values much larger than the other strategies. The total weighted steady-state measure predicts strategies 6, 8, 9, 10, 11, and 12 are the most promising. Strategies 1, 2, and 4 had the largest values. There is some consistency among these three measures in terms of the strategies that had bad values. Strategies 1,2, and 4 had large values for each measure. It is interesting to note at this time that these three strategies had low values for the disturbance condition number. The disturbance condition number would indicate that the disturbance lies along a

TABLE 5.8

Performance-weighted Disturbance Gains -
Feed Composition Disturbance

Strategy	$\Sigma a_i(\alpha_i$ sens)	$\Sigma b_i(\beta_i$ sens)	Total
1	0.6005	0.2596	0.8601
2	0.6003	0.1997	0.8000
3	0.4459	0.1504	0.5863
4	0.6240	0.2641	0.8881
5	0.4292	0.1477	0.5769
6	0.2774	0.0656	0.3430
7	0.4372	0.0547	0.4919
8	0.0202	0.0098	0.0300
9	0.3731	0.0572	0.4303
10	0.3812	0.0421	0.4233
11	0.3961	0.0964	0.4925
12	0.3797	0.0335	0.4132

a_i - relative weight for controlled variable i

b_i - relative weight for manipulated variable i

α_i sens - RCG numerator or RCG denominator (dependent upon automatic/manual status of control loops)

β_i sens - RDG numerator or RDG denominator (dependent upon automatic/manual status of control loops)

good direction for the plant, but the RCG and RDG information suggests that the variations may be large, even for a disturbance in a good direction.

5.4.2 Dynamic Studies

To explore the validity of the steady-state measures employed here, dynamic studies were performed. A persistent, random feed composition disturbance was introduced into the plant. The disturbance followed a gaussian distribution with a frequency of thirty minutes and a standard deviation of 0.006667. Figure 5.8 shows an example of the type of disturbance entering the plant. Figure 5.9 displays the process response for strategy 8. The appendix contains the results of a statistical evaluation (carried out via analysis with SAS) of the data for several dynamic responses. This data was used to test the null hypothesis that the data came from a random sampling of a normal distribution. The results indicate that none of the variables satisfies the null hypothesis and thus the conclusion is that the data is not a random sampling from a normal distribution. Therefore, the numbers employed to measure variation will be sum of the squared errors (SSE) and sum of the squared controller actions (SSU) where

$$SSE_{x_i} = (n-1)s^2_{x_i}$$

$$SSU_{\Delta m_i} = (n-1)s^2_{\Delta m_i}$$

The estimates of the standard deviations are

$$s_{x_i} = \sqrt{\frac{\sum (x_i - \bar{x}_i)^2}{n-1}}$$

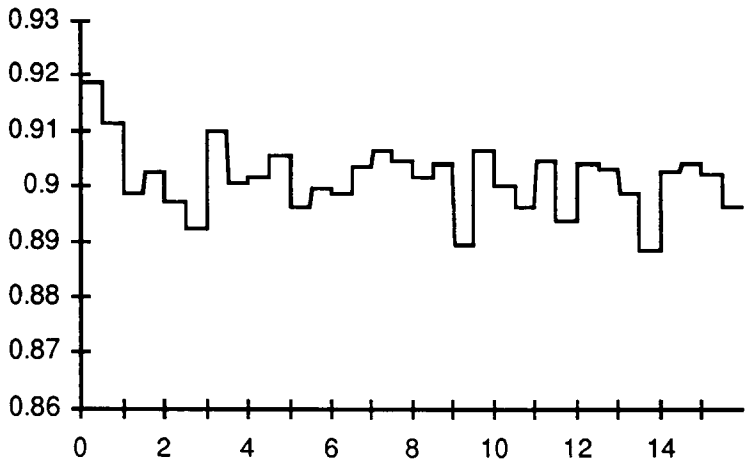

FIGURE 5.8

Fresh Feed Composition Disturbance

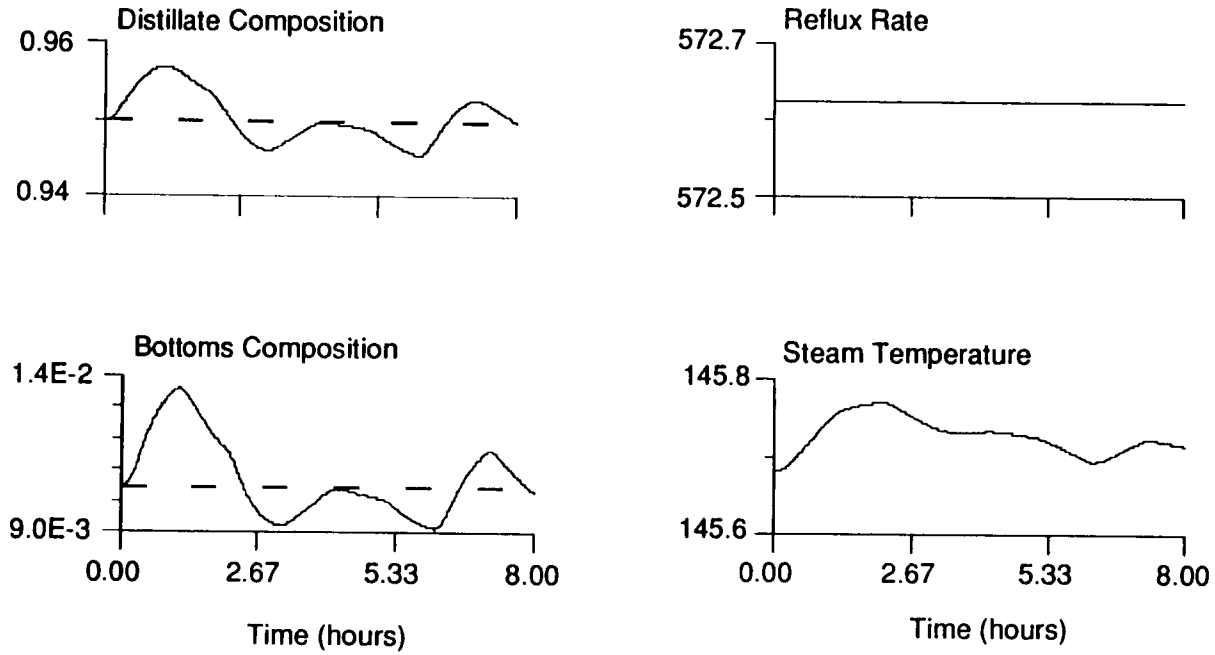

FIGURE 5.9

Strategy 8 Response - Feed Composition Disturbance

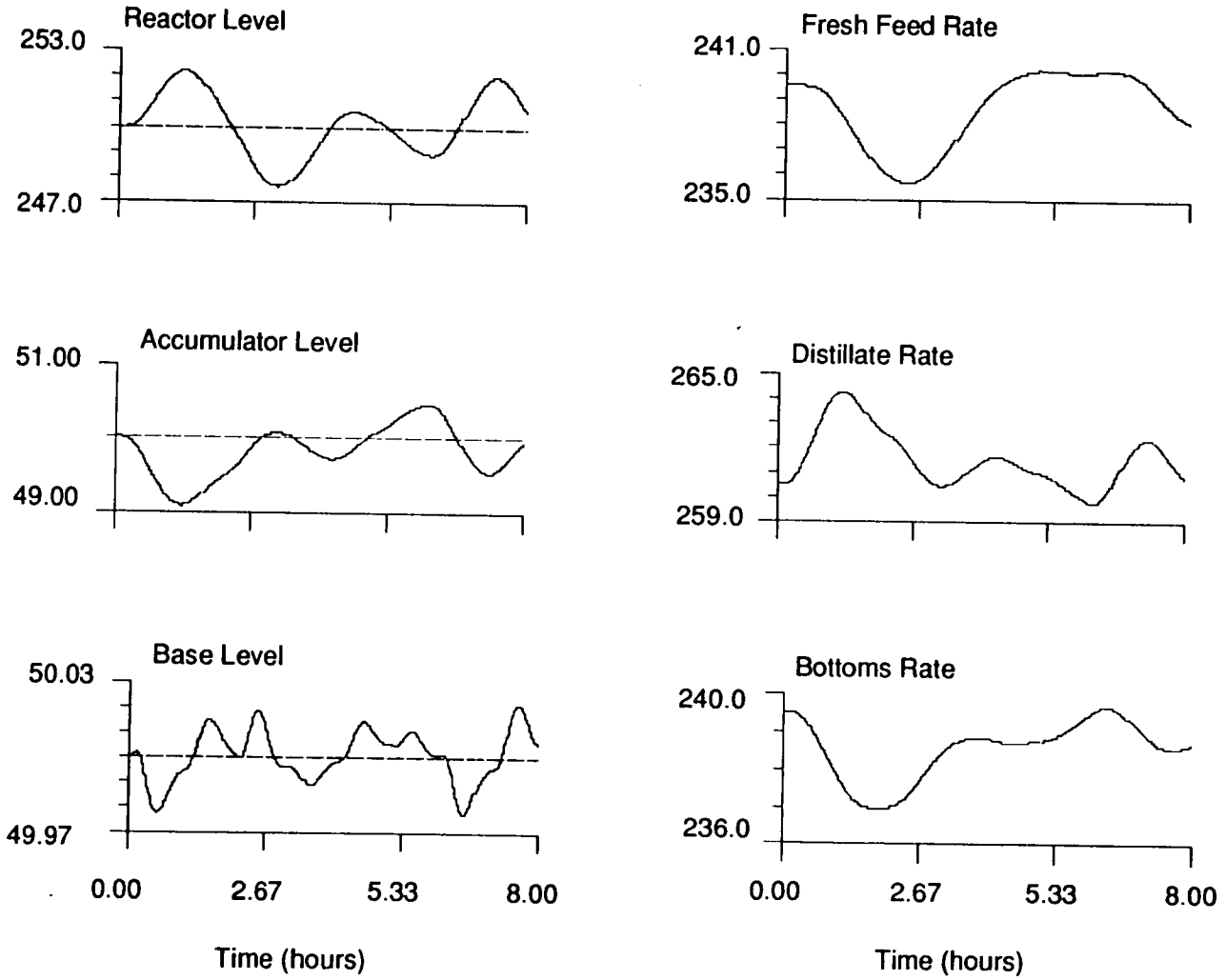

FIGURE 5.9 (continued)

$$s_{\Delta m_i} = \sqrt{\frac{\sum (\Delta m_i - \Delta \overline{m}_i)^2}{n-1}}$$

In the remainder of this work, the terms variability and variation will refer to the SSE and SSU values.

The SSE and SSU values were scaled to represent the physical scaling. Figure 5.10 shows the scaling for strategy 1. The composition measurements were assumed to have sensor span of 0.1 and the manipulated variables were assumed to have a range equal to the steady-state value for the variable (the base case is 50% of valve position and it can vary 50% of this value to either side). Additionally, due to the difference in magnitude of errors in measured variables and changes in manipulated variables, the manipulated variable variances were multiplied by a factor of 10000. Table 5.9 displays the results of the dynamic studies. SSU values are shown for two cases. The first being one where only the variation in the manipulated variables associated with the composition controllers was considered, and the second being where the variation in all manipulated variables was calculated. Strategies 1, 4, 5, and 10 have the least manipulated variable variation when all variables are considered, while strategies 2, 3, 5, 6, 8, and 10 have the least variation when only the manipulated variables associated with composition control are considered. For two of the strategies that rank better when only the composition control manipulated variables are considered, the fresh feed variation is a large contributor to the overall variation. For the majority of the strategies that have a better ranking when all five manipulated variables are considered, the variation in the level control manipulated variables is on the same order as that of the

Variable	SSE	Scaling		Scaled SSE
Bottoms Composition	6.683E-4	$/(0.1)^2$	=	6.683E-2
Distillate Composition	1.049E-3	$/(0.1)^2$	=	1.049E-1

Variable	SSU	Scaling		Scaled SSU
Column Feed Rate	0.1353	$1E4/(500)^2$	=	5.411E-3
Distillate Flow Rate	0.1257	$1E4/(260.5)^2$	=	1.852E-2
Bottoms Flow Rate	0.1031	$1E4/(239.5)^2$	=	5.441E-3
Reflux Flow Rate	0.6028	$1E4/(572.6)^2$	=	1.838E-2
Reboiler Energy Input	0.0142	$1E4/(145.7)^2$	=	1.852E-2

FIGURE 5.10

Scaling of Dynamic Response Data for Strategy 1 -
Feed Composition Disturbance

TABLE 5.9

Dynamic Variability -
Feed Composition Disturbance

Strategy	$\left(\sum_{i=1}^{5} SSU_i\right)x10^2$	$\left(\sum_{i=1}^{2} SSU_i\right)x10^2$	$\left(\sum_{i=1}^{2} SSE_i\right)x10^2$	$\left(\sum_{i=1}^{2} SSE_i + \sum_{j=1}^{5} SSU_j\right)x10^2$	$\left(\sum_{i=1}^{2} SSE_i + \sum_{j=1}^{2} SSU_j\right)x10^2$
1	6.698	2.520	11.241	17.939	13.761
2	6.688	0.652	32.501	39.189	33.153
3	12.992	0.951	40.281	53.273	41.232
4	6.411	2.707	20.789	27.200	23.496
5	6.624	0.983	16.725	23.349	17.708
6	16.606	0.552	1.840	18.446	2.392
7	12.622	5.898	3.472	16.094	9.370
8	8.905	0.155	8.956	17.861	9.111
9	5.291	1.639	9.255	14.546	10.894
10	6.328	0.825	8.660	14.988	9.485
11	9.500	1.772	2.284	11.784	4.056
12	16.265	5.183	0.164	16.429	5.347

composition control manipulated variables. Strategies 6, 7, 9, 10, and 12 have the least measured variable variability.

The agreement among the two calculated overall variability measures (one including all manipulated variables and one including only the composition control manipulated variables) is much better than the agreement among the two SSU values. Strategies 7, 10, 11, and 12 have low variabilities for both measures. Additionally, strategies 1, 2, 3, 4, and 5 have the most variation with each measure. It should be noted that for each of the variability measurements shown in Table 5.9, the data seemed to fall within broad descriptive ranges such as good, average, and bad. Beyond these broad cuts, there were very few occasions where a strategy distinguished itself from the others. Also, although an optimization program was employed to tune the composition controllers, the results were subject to user specified variable weights and level controller tuning parameters. Because of this, it is expected that different tuning could reorder the strategies within the broad descriptive categories; it is unlikely that the nature of the response would change dramatically enough to cause reclassification of the strategy.

5.4.3 Comparison of Steady-state and Dynamic Results

The weighted summation of RCG sensitivities provided an effective screening technique for identifying variation transformation properties with regards to measured variables. Table 5.10 shows the relative rankings of the various strategies based on the weighted sensitivities and dynamic SSE values. A large group of the strategies have weighted sensitivities that are of approximately the same value; these include 3, 5, 6, 7, 9, 10, 11, and 12.

TABLE 5.10

Comparison of Steady-state and Dynamic Rankings for Transformation of Variation to Measured Variables - Feed Composition Disturbance

$\sum a_i(\alpha_i \text{ sens})$ rank	$\sum_{i=1}^{2} SSE_i$ rank
8	12
6	6
9	11
12	7
10	10
11	8
5	9
7	1
3	5
2	4
1	2
4	3

Differentiating between these strategies based on this steady-state measure is not possible. Additionally, the SSE values fall into three broad groups: 6, 7, 11, and 12 have low SSE values; 1, 8, 9, and 10 have moderate SSE values; and 2, 3, 4, and 5 have large SSE values. With this taken into account, all strategies responded in the manner predicted, or in a manner worse than predicted. This is consistent with employing a steady-state analysis tool to screen poor strategies. A steady-state analysis will never identifying strategies with dynamic problems, but should be expected to identifying strategies with steady-state problems. Also, strategies with poor steady-state properties seldom have good dynamic responses.

The weighted summation of RDG sensitivities adequate at screening control strategies. Table 5.11 shows the rankings based on the weighted sensitivities and dynamic variability results. When considering only two manipulated variables in the SSU calculation, strategies 3, 5, and 10 have approximately the same value. When all five manipulated variables are considered, strategies 1, 2, 4, 5, and 10 have roughly the same value for the SSU. The correspondence between the weighted sensitivities and the SSU values is relative good when only the manipulated variables associated with composition control are included in the SSU value. The correspondence is not as good when all five manipulated variables are considered.

The weighted sensitivities for the manipulated variables identified strategies 1 and 4 as poor, when in reality their dynamic transformation of variation to manipulated variables was good. Further consideration must be given to the causes of this phenomena. Strategies 1 and 4 both had low disturbance condition numbers, indicating that the disturbance was aligned in a

TABLE 5.11

Comparison of Steady-state and Dynamic Rankings for Transformation of Variation to Manipulated Variables - Feed Composition Disturbance

$\sum b_i(\beta_i \text{ sens})$ rank	$\sum_{i=1}^{2} SSU_i$ rank	$\sum_{i=1}^{5} SSU_i$ rank
8	8	9
12	6	10
10	2	4
7	10	5
9	5	2
6	3	1
11	9	8
5	11	11
3	1	7
2	4	3
1	12	12
4	7	6

direction close to the "best" direction. Additionally, these two strategies both employed a DQ strategy on the column (i.e. distillate to control distillate composition and boilup to control bottoms composition). The third strategy that employed a DQ strategy also had a better dynamic response than expected. Strategies that employ DQ on the column, pair a manipulated variable that is important, distillate flow rate, with a controlled variable that is of low importance, distillate composition. The combination of these two considerations lead to controller tuning in the distillate composition controller that is relatively loose. Thus, the variability actually transformed to the distillate flow rate is less than predicted by the steady-state measures. Strategies 1, 4, and 7 are the only strategies considered that pair a manipulated variable that should not move much with the distillate composition. On the opposite end of the column, these same three strategies pair the energy input, which has been given a low weight, with the bottoms composition, which has a high weight. The situation encourages tight control of the bottoms composition, which is achieved with these three strategies. Two strategies that have more variation in the manipulated variables than predicted by the steady-state measures employ an LQ strategy on the column. Using low weight manipulated variables for control of the compositions encourages tight tuning, and thus larger than expected variation in the manipulated variables.

Consideration of the total summed gain values (weighted summation of RCG and RCG sensitivities) indicates that this method of screening control strategies is fairly accurate. Table 5.12 displays the strategy rankings based on the overall steady-state measures and dynamic response data. Only strategy 1 exhibits a good response while having a poor steady-state performance

TABLE 5.12

Comparison of Steady-state and Dynamic Rankings for
Overall Transformation of Variation
- Feed Composition Disturbance

$\sum b_i(\beta_i \text{ sens}) +$ $\sum a_i(\alpha_i \text{ sens})$ rank	$\sum_{i=1}^{2} SSU_i +$ $\sum_{i=1}^{2} SSE_i$ rank	$\sum_{i=1}^{5} SSU_i +$ $\sum_{i=1}^{2} SSE_i$ rank
6	6	11
8	11	9
12	12	10
10	8	7
9	7	12
7	10	8
11	9	1
5	1	6
3	5	5
2	4	4
1	2	2
4	1	1

measure. The possible reasons for this were discussed in the previous paragraph. Additionally, strategies 6, 8, 9, 10, and 12 appear to be good strategies based on steady-state information, and indeed all of these strategies have good dynamic responses. Strategy 9 has the lowest total variation, with strategies 6, 8, 10, and 12 falling in a broad group of strategies with good dynamic responses. Strategies 2, 3, 4, 5, and 11 had the largest total variation in response to the feed composition disturbance. Four of these strategies, 2, 3, 4, and 5, had large total weighted disturbance sensitivities.

In addition to being able to conceptually make a connection between the RDG and RCG values and the physical situation, a connection was confirmed with the dynamic results. Figure 5.11 displays the sum of the squared errors of the measured variables and the sum of the squared changes of the manipulated variables associated with composition control for strategy 1. Figure 5.11 also shows the RDG and RCG values, as well as the ratios of the corresponding variabilities. The RDG associated with the distillate composition measures the relative change in distillate flow when all controllers are in automatic to when only the distillate composition controller is in automatic. A ratio of the sum of the squares changes in the distillate flow was created to mimic the RDG. The RDG associated with the bottoms composition is a ratio of the change in energy input with all controllers in automatic to the change in energy input when only the bottoms composition controller is in automatic. Similar ratios were created for the measured variables. The variation in the distillate composition with only the bottoms controller active was compared to the variation in the distillate composition with neither composition controller active. Similarly, a ratio was

	Controller Status			
Variation in:	Both Auto	x_B auto	x_D auto	Both Manual
Distillate Flow	0.01145	---	0.00786	---
Steam Temperature	0.00385	0.00398	---	---
Bottoms Composition	2.64E-4	3.41E-4	4.59E-4	5.33E-4
Distillate Composition	1.05E-3	1.56E-3	1.13E-3	1.40E-3

		RDG
Distillate Flow	$SSU_{auto} / SSU_{x_D\ only} = 0.01145 / 0.007864 = 1.456$	1.249
Steam Temperture	$SSU_{auto} / SSU_{x_B\ only} = 0.003846 / 0.00398 = 0.9663$	0.373

		RCG
Bottoms Comp	$SSE_{x_D\ only} / SSE_{man} = 4.587E-4 / 5.332E-4 = 0.860$	0.496
Distillate Comp	$SSE_{x_B\ only} / SSE_{man} = 1.565E-3 / 1.397E-3 = 1.120$	1.249

FIGURE 5.11

Dynamic Response Data for Strategy 1 -
Feed Composition Disturbance

created for the variation in the bottoms composition with the distillate controller in automatic to the variation with neither composition controller in automatic.

The data agrees surprisingly well with the type of response predicted by the steady-state measures, in terms of increased or decreased variation. The variation in the distillate flow is greater when both controllers are active than when just the distillate composition controller is in automatic; the RDG value was 1.249. The variation in the steam temperature was less with both controllers in automatic than with just the bottoms composition controller in automatic; the RDG was 0.373. Both RCG values also agree with the dynamic response. The variation in the bottoms composition is less with the distillate composition controller in automatic than when both controller are in manual. The variation in the distillate composition is greater with the bottoms composition controller in automatic than with both controllers in manual. In two of the four cases, the ratio of the summed quantities is even close to the value of the steady-state measure.

There is another piece of steady-state information that can be evaluated and compared with the dynamic results. The values of the weighted RCG and RDG sensitivities for the individual control loops are compared to the variability in each of the associated controlled or manipulated variables. Table 5.13 displays the weighted sensitivities for the individual manipulated variables. Also shown in this table are the sum of the squared changes for the associated manipulated variables. The values of particular interest are those of the manipulated variables associated with bottoms composition control. The numbers for the manipulated variables associated with the distillate composition controller do not provide the same amount of information since this controller was not utilized in several of the control schemes. The agreement between the magnitude of the weighted

TABLE 5.13

Weighted Manipulated Variable Disturbance Senstivity Evaluation
Feed Composition Disturbance

Strategy	$w_{m_{x_B}}\left(\beta_{m_{x_B}}\ \text{gain}\right)$	$SSU_{xb}x10^2$	$w_{m_{x_D}}\left(\beta_{m_{x_D}}\ \text{gain}\right)$	$SSU_{xd}x10^2$
1	0.0209	0.668	0.2387	1.852
2	0.1997	0.652	---	---
3	0.1504	0.951	---	---
4	0.0236	0.735	0.2405	1.972
5	0.1477	0.983	---	---
6	0.0236	0.540	0.0420	0.012
7	0.0005	0.265	0.0544	3.074
8	0.0005	0.155	0.0093	7.902
9	0.0572	1.620	---	---
10	0.0366	0.825	0.1684	0.000
11	0.0964	1.772	---	---
12	0.0033	5.183	---	---

sensitivity values and the dynamic variability in the manipulated variables is good. Only one strategy, 2, had a low amount of variation in the manipulated variable while having a relative large gain. Conversely, strategy 12 is the only strategy with a relatively low weighted sensitivity and yet a large variation in the manipulated variable.

Table 5.14 displays similar data for the measured variables. The weighted disturbance sensitivity from the RCG is shown for each composition. Also, the sum of the squared errors is displayed for the bottoms composition and the distillate composition. The correspondence between the weighted sensitivities and the variability measure was reasonably good. Strategy 4 had more variation in the bottoms composition than expected and strategies 10 and 12 had less variation than expected.

There are several general observations that can be made based on the results presented so far. First, as suggested by the component inventory analysis, there are several strategies where an active distillate composition controller increased the variation in the bottoms composition (the product). The process response for these strategies is better if any composition changes in the distillate stream are recycled to the reactor where the reaction rate works to regulate the component inventory. Also, based on the steady-state performance measures, the production rate should be set with either the column feed rate or the distillate flow rate. Strategies that used bottoms flow rate or fresh feed rate to set production had larger weighted RDG and RCG values. This would be consistent with the idea that allowing the bottoms and fresh feed rates to change allows some of the variation to be pushed out of the plant, instead of back around through the recycle stream. However, it should be noted that at this point, the

TABLE 5.14

Weighted Measured Variable Disturbance Senstivity Evaluation
Feed Composition Disturbance

Strategy	$w_{x_B}(\alpha_{x_B}$ sens)	$SSE_{xb}x10^2$	$w_{x_D}(\alpha_{x_D}$ sens)	$SSE_{xd}x10^2$
1	0.170	0.668	0.431	10.491
2	0.343	3.849	---	---
3	0.343	5.862	---	---
4	0.191	1.688	0.434	19.101
5	0.343	2.325	---	---
6	0.191	0.056	0.086	1.784
7	0.005	0.398	0.432	3.074
8	0.005	1.036	0.015	7.920
9	0.343	1.032	---	---
10	0.343	0.639	---	---
11	0.343	2.480	---	---
12	0.343	0.003	---	---

process is considered to be isolated from other units. Particularly, that the fresh feed is coming from an inventory large enough to take any flow variations dictated by the control strategy.

5.5 Process 1 - Production Rate Disturbance

A production rate disturbance was also introduced into the reactor/column module. The disturbance had a gaussian distribution with a duration of eight hours and a standard deviation that produced a change of 2 lbmol/hour in the product stream (bottoms flow rate). (If column feed rate or distillate rate control production, the changes required in that flow required to achieve a change of 2 lbmol/hour in the bottoms flow is greater than 2 lbmol/hour.) This disturbance produced a percentage change in the production rate roughly equivalent to that of the feed composition disturbance. Figure 5.12 shows an example of a production rate disturbance in the fresh feed rate.

5.5.1 Disturbance Analysis

In contrast to the open-loop disturbance gains for a feed composition change, the open-loop gains for production rate changes vary for different control strategies. There are differences between, as well as within, methods of production rate control. Strategies 9 and 11 had the smallest gains for the impact of production rate on bottoms composition and distillate composition. These strategies fix the bottoms flow rate while increasing the production rate. Since the bottoms flow rate is fixed, the fresh feed rate will not change (at steady-state), and consequently the column feed composition will not change substantially. Without the additional disturbance in the column feed composition, the impact of

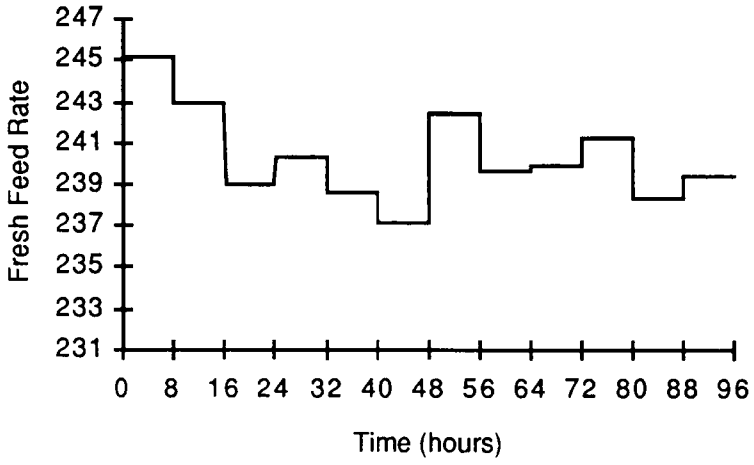

FIGURE 5.12

Production Rate Disturbance (Fresh Feed Rate)

the production rate disturbance on the distillate and bottoms composition is reduced. But, for these strategies, a change in the production of the plant is not actually being accomplished since the bottoms flow rate (the product) is not changing. The impact of a production rate disturbance on the measured variables was largest for strategy 7. For this strategy, the distillate flow and energy input are held constant while the fresh feed rate to the column is changed. The column feed composition will change since the fresh feed rate changes, and therefore, since the distillate rate is held constant, the changes in the material balance (both production and composition) must be reflected in the bottoms flow rate, the bottoms composition, and the distillate composition. The gains for the remaining strategies are about the same. All of these strategies will see both a production rate disturbance and a resulting change in the column feed composition.

Table 5.15 shows the disturbance condition number, maximum singular value, and disturbance index. Strategy 6 has the largest disturbance condition number, but a small value for $1/\sigma_{max}$. Strategies 6, 7, 8, 9, 10, and 12 have favorable values for $1/\sigma_{max}$, while strategies 1, 2, 3, 4, and 5 have unfavorable values for $1/\sigma_{max}$. The disturbance index indicates strategies 1, 3, 4, and 6 have poor disturbance rejection characteristics. Additionally, strategies 7, 8, 10, and 12 appear to have the best disturbance response properties with respect to movement in the manipulated variables. It is important to remember at this point that these numbers represent the dual-ended control case. For strategies that employ single-ended control, the disturbance condition does not appropriately measure manipulated variable changes necessary to reject the disturbance.

TABLE 5.15

Disturbance Condition Number Analysis -
Production Rate Disturbance

Strategy	γ_d	σ_{max}	σ_{max}/γ_d
1	3.69	7.37	2.00
2	2.36	12.34	5.23
3	3.52	14.26	4.05
4	5.30	15.10	2.85
5	2.70	14.31	5.30
6	11.91	41.22	3.46
7	3.09	36.11	11.69
8	7.66	69.93	9.13
9	5.75	39.74	6.91
10	3.24	57.75	17.82
11	3.07	20.25	6.60
12	4.22	59.45	14.09

γ_d - Disturbance condition number. Small values are favored.

σ_{max} - Maximum singular value of gain matrix. Large values are favored.

σ_{max}/γ_d - Disturbance rejection index. Large values are favored.

Table 5.16 shows the RDG and RCG values for a production rate disturbance. The RCG values for bottoms composition indicated increased variations when the distillate composition controller was active for strategies 2, 3, 5, 9, 10, 11, and 12. The dynamic tuning studies turned off the distillate composition controller for strategies 2, 3, 8, 10, 11, and 12. As with the feed composition disturbance, the RCG values were a good predictor of the impact of the distillate composition controller on variations in the bottoms composition in response to a disturbance. Only strategy 8 was not identified by the RCG as having unfavorable interaction properties. However, the RDG associated with the bottoms composition controller for strategy 8 was much larger than one for this strategy (indicating increased variation in the manipulated variable associated with the bottoms composition controller). Also, although both controllers were active for strategies 5 and 9, the distillate composition controller was tuned very loosely in each case, as suggested by the RCG values.

The RDG values for the bottoms composition controller are greater than one for strategies 6, 8, 9, 10, 11, and 12 (although the value is only slightly larger than one for strategies 10 and 12). Strategies 6 and 8 are the only two of these strategies for which the RCG of the bottoms composition controller is not also greater than one. Strategies 6 and 8 employ an LQ strategy on the column. While turning off the distillate composition controller will not cause a component inventory control problem, it will increase the composition variation in the return to the reactor. For strategy 8, where the fresh feed rate and bottoms rate change to lessen the column feed composition variation resulting from a production rate disturbance, the distillate composition controller was deactivated by the tuning procedure. This result possibly reflects that since the change in the column feed

TABLE 5.16

RDG and RCG Disturbance Analysis -
Production Rate Disturbance

Strategy	$\beta(x_d)$	$\beta(x_b)$	$\alpha(x_d)$	$\alpha(x_b)$
1	1.33	0.43	1.77	0.57
2	-0.24	0.63	-0.96	2.54
3	-0.15	0.80	-0.43	2.34
4	1.23	0.36	1.64	0.47
5	-0.06	0.89	-0.19	2.84
6	-0.51	1.27	-0.19	0.47
7	1.08	0.10	1.78	0.16
8	-1.68	2.17	-0.23	0.30
9	0.13	1.25	0.30	2.98
10	0.07	1.11	0.16	2.54
11	0.27	1.82	0.60	4.01
12	0.04	1.06	0.09	2.36

$\beta(x_i)$ - Relative disturbance gain for the manipulated variable associated with the controlled variable x_i. Favorable values are between negative one and positive one.

$\alpha(x_i)$ - Relative control gain for the controlled variable x_i. Favorable values are between negative one and positve one.

composition is small, the additional variability introduced by not controlling the distillate composition does not significantly degrade the performance of the column. Conversely, for strategy 6, where the impact of a production rate disturbance on the column feed composition is larger, not controlling the distillate composition does degrade the column performance, although the variation in the reboiler energy input is decreased when the distillate composition controller in inactive.

The steady-state results were related to the physical situation for strategy 1. With both composition controllers in manual, the change in fresh feed rate will also create a change in the column feed composition. Additionally, the flow disturbance will be reflected in the bottoms flow rate and column feed rate. With composition controllers in automatic, the change in the column feed composition will be the same as with both controllers in manual. However, the distillate flow is free with the controllers in automatic, and the change in the column feed rate may be different than with both controllers in manual. With only the bottoms composition controller in automatic, the distillate flow is fixed and a component inventory control problem exists. The variability in the energy input will be greater in this case than with both controllers in automatic because the reboiler duty must push all of component J (above the base case amount) out through a change in the distillate composition (RDG is 0.43). The variability in the distillate composition will be greater than with both controllers in manual because the distillate flow is fixed and with the bottoms composition controller in automatic the variation is forced from the bottoms composition to the distillate composition (RCG is 1.77). With only the distillate composition controller active, the variation in the distillate flow will be less than with both controllers in automatic because

some of the disturbance is free to leave in the bottoms composition (RDG is 1.33). The variation in the bottoms composition will be less than with both controllers in manual because the distillate flow is changing with the distillate controller in automatic to correct the material balance (RCG is 0.57).

The impact of a change in the variable determining production was also considered for strategy 9. Strategy 9 sets the column feed rate to determine production. With both composition controllers in manual, a change in the column feed rate does not change the column feed composition because the bottoms rate (and hence the fresh feed rate) is held constant. This situation does not truly accomplish a change in the production rate (as measured by the bottoms composition) even though the variable setting production is changed. With both composition controllers in automatic, a production rate change does occur, and the composition of the column feed changes, as will all of the flow rates in the plant. With the bottoms composition controller in automatic and the distillate composition controller in manual, the bottoms rate and the feed composition to the column will change. The change in the column feed composition will be equal to the change that occurs with both composition controllers in automatic. The change bottoms flow rate should be less than with both controllers in automatic since the distillate composition will be allowed to float and the same manipulated variables are moving (RDG is 1.25). The change in the distillate composition should be less than when both controllers are in manual since with the bottoms composition controller in automatic, the material balance at the bottom of the column will change instead or forcing all of the change in column feed rate around in the material recycle (RCG is 0.30). With the distillate composition controller in automatic and the bottoms composition controller in

manual, the bottoms flow rate will not change and the column feed composition will not change. This strategy also has a component inventory control problem. However, the change in the bottoms composition should be larger than when both composition controllers are in manual since the changes in column feed and distillate flow will be the same, but the distillate composition is held constant (RCG is 2.98). The change in the reflux flow should be larger than with both composition controller in automatic since the material balance at the bottom is not changing and the controller is attempting to maintain product quality at the top of the column (RDG is 0.13).

Table 5.17 displays the performance-weighted RDG sensitivity and RCG sensitivity values. These numbers are a measure of the impact of a disturbance on the measured variables and manipulated variables. The terms included in the weighted sums are dependent on the status of the controller, in a manner identical to that described for the feed composition disturbance. The weighted RDG sensitivity values for the active controllers indicate that strategies 8, 9, 10, 11, and 12 should have the least variation in the manipulated variables. Strategies 1, 2, 3, and 4 should have larger variations in the manipulated variables in response to the disturbance based on these numbers. The weighted sum of the RCG sensitivity values indicated strategies 1, 3, 4, and 7 should have the most variation in the measured variables, while strategies 6, 8, 9, and 11 should offer the least variation in the measured variables. From the perspective of total variation, strategies 1, 3, 4, and 7 should have the most variation while 6, 8, 9, and 11 should have the least overall variation.

TABLE 5.17

Performance-weighted Gains -
Production Rate Disturbance

Strategy	$\Sigma a_i(\alpha_i$ sens)	$\Sigma b_i(\beta_i$ sens)	Total
1	4.22	1.73	5.95
2	3.01	1.67	4.68
3	6.05	1.32	7.37
4	4.64	2.04	6.68
5	3.00	1.08	4.08
6	1.63	0.62	2.25
7	6.74	0.82	7.56
8	1.17	0.29	1.46
9	1.54	0.19	1.73
10	3.51	0.30	3.81
11	0.85	0.13	0.98
12	3.62	0.32	3.94

a_i - relative weight for controlled variable i

b_i - relative weight for manipulated variable i

α_i sens - RCG numerator or RCG denominator (dependent upon automatic/manual status of control loops)

β_i sens - RDG numerator or RDG denominator (dependent upon automatic/manual status of control loops)

5.5.2 Dynamic Studies

To evaluate the ability of the approach taken here to correctly predict the transformation of variation properties of the system, a dynamic study was performed for a production rate disturbance. The composition controllers were tuned to minimize the objective function representing the overall operating objectives of the process for a production rate disturbance. Figure 5.13 displays the dynamic response of strategy 10. The results of the dynamic study were scaled to represent the physical situation. Figure 5.14 displays the scaling of the dynamic data for strategy 6. The SSE values were scaled by the range of the composition sensors. SSU values were scaled by the range of the manipulated variables. In addition, the SSU values were multiplied by 10000 to put the SSE and SSU values on the same order of magnitude. Table 5.18 displays the dynamic results for a production rate disturbance. The dynamic results indicated that 6, 8, 10, 11, and 12 had the least variation in the measured variables, while 2, 3, and 5 had the most variation. Two measures of the manipulated variable movement are shown in Table 5.18. The first measure includes the sum squared changes for all five manipulated variables, while the second measure contains only the values for the two manipulated variables associated with composition control. If all manipulated variables are considered, strategies 1, 4, 6, 10, and 12 have the least variation, where as when only two manipulated variables are considered 2, 5, 8, 10, and 11 have the least variation. The over-riding factor in differentiating between the results of the two measures of manipulated variable movement appears to be whether dual-ended or single-ended control is implemented for the column. Strategies 2, 5, 8, 10, and 11 all operate with only

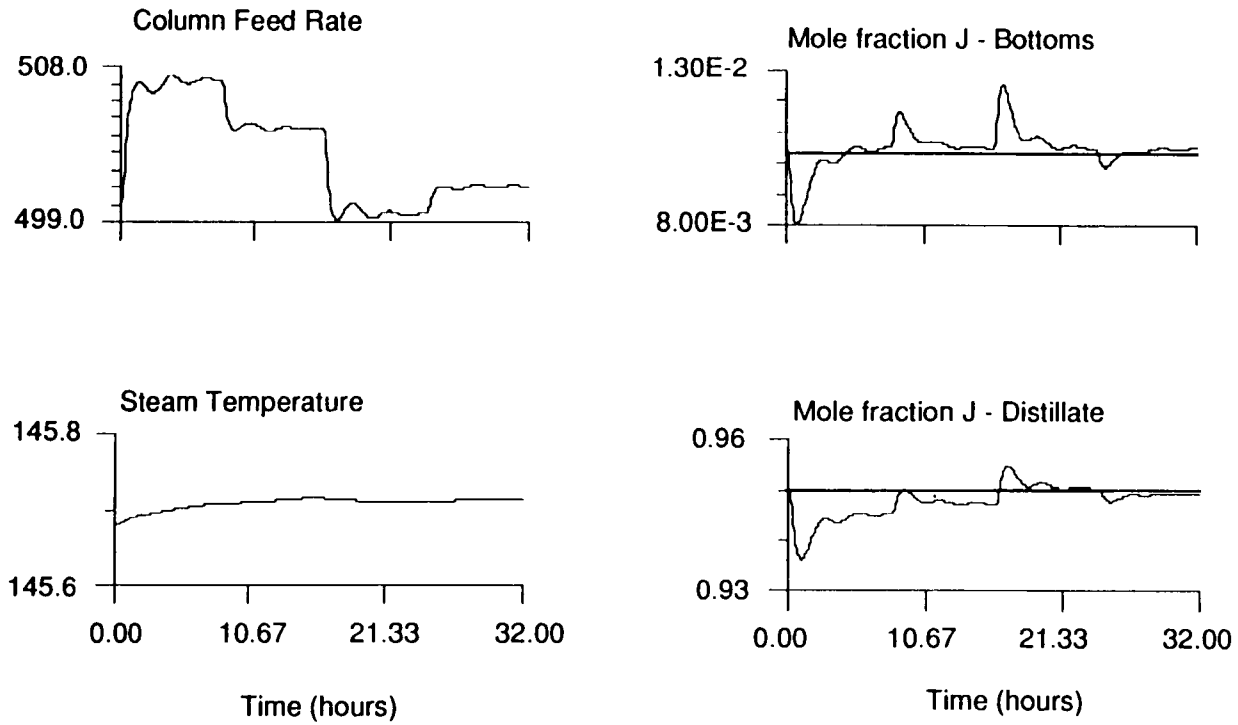

Figure 5.13

Strategy 10 Response - Production Rate Disturbance

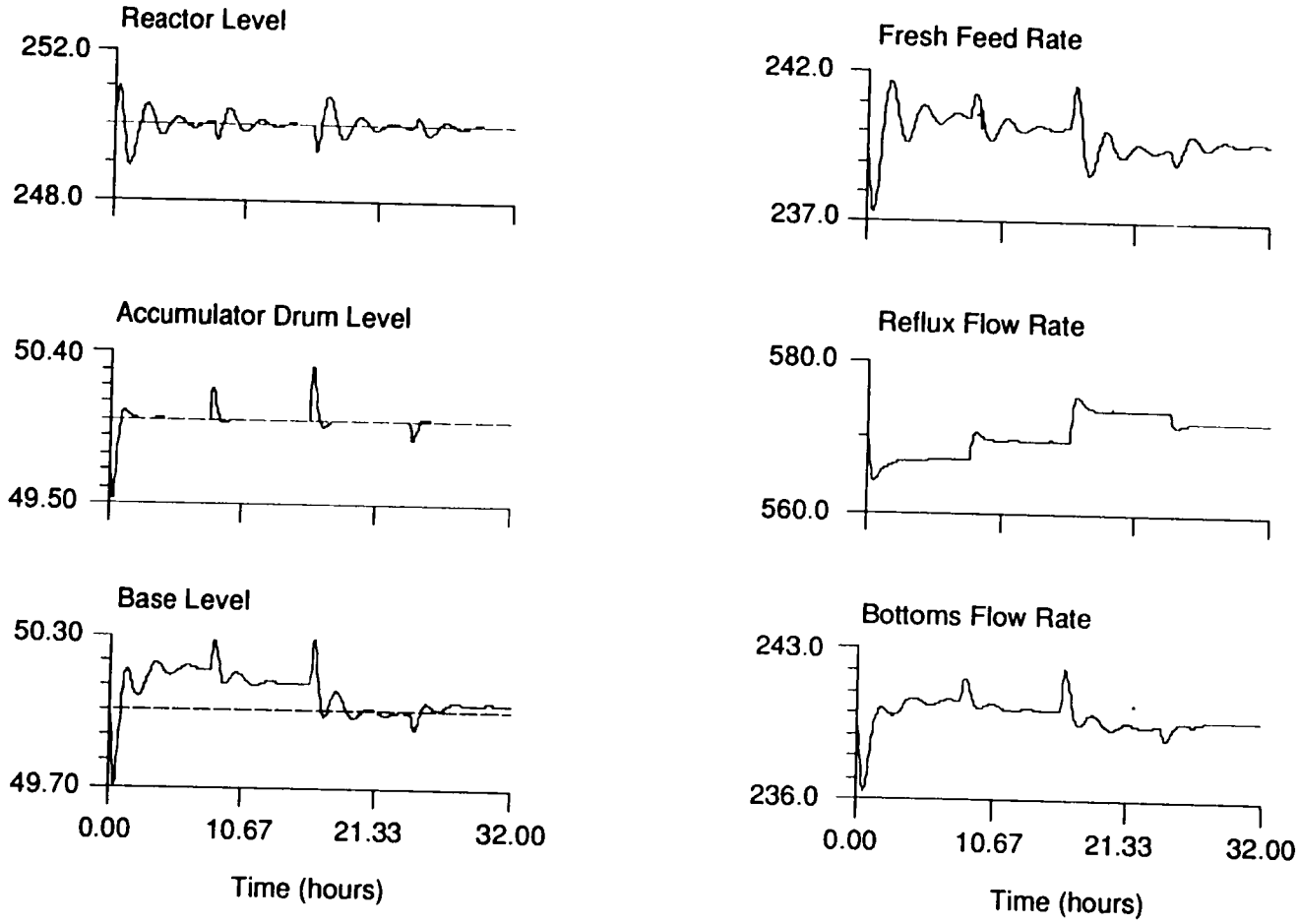

Figure 5.13 (continued)

Variable	SSE	Scaling		Scaled SSE
Bottoms Composition	1.128E-4	$/(0.1)^2$	=	1.128E-2
Distillate Composition	2.978e-4	$/(0.1)^2$	=	2.978E-2

Variable	SSU	Scaling		Scaled SSU
Column Feed Rate	10.168	$1E4/(500.0)^2$	=	0.417
Distillate Flow Rate	7.564	$1E4/(260.5)^2$	=	1.115
Fresh Feed Rate	6.658	$1E4/(239.5)^2$	=	1.161
Reflux Flow Rate	0.177	$1E4/(572.6)^2$	=	5.398
Reboiler Energy Input	0.039	$1E4/(145.7)^2$	=	1.820

FIGURE 5.14

Scaling of Dynamic Response Data for Strategy 6 -

Production Rate Disturbance

TABLE 5.18

Dynamic Variability - Production Rate Disturbance

Strategy	$\left(\sum_{i=1}^{5} SSU_i\right)$	$\left(\sum_{i=1}^{2} SSU_i\right)$	$\left(\sum_{i=1}^{2} SSE_i\right)$	$\left(\sum_{i=1}^{2} SSE_i + \sum_{j=1}^{5} SSU_j\right)$	$\left(\sum_{i=1}^{2} SSE_i + \sum_{j=1}^{2} SSU_j\right)$
1	6.594	2.092	0.781	7.375	2.873
2	10.512	0.584	20.509	31.021	21.093
3	48.706	4.219	10.838	59.544	15.057
4	6.539	1.242	0.909	7.448	2.151
5	27.207	0.410	3.541	30.748	3.951
6	4.728	3.147	0.041	4.769	3.188
7	10.757	1.787	1.266	12.023	3.053
8	15.549	0.048	0.489	16.038	0.537
9	36.956	4.126	1.288	38.244	5.414
10	4.177	1.133	0.717	4.894	1.850
11	11.492	0.012	0.598	12.090	0.610
12	8.018	1.270	0.473	8.491	1.743

the bottoms composition controller in automatic. Conversely, strategies 1, 4, and 6 control both column product compositions. Based on this, it appears that the SSU measure that includes data for all five variables is most representative of overall process behavior.

An overall dynamic performance measure was calculated for each strategy. This value is a total of the summed SSE values and the summed SSU values. Since there are two measures of dynamic manipulated variable changes, two overall performance measures are calculated. The agreement between the two overall measures is good. Strategies 1, 4, 6, 8, 10, 11, and 12 have relatively low total variability. Strategies 2, 3, and 5 have the worst dynamic responses from the perspective of total variability. Only two strategies, 6 and 8, have considerably different values. Strategy 6 ranks well when all manipulated variables are considered and poorly when only the composition control manipulated variables are considered. Strategy 8 ranks well when only the composition control manipulated variables are considered and poorly when all manipulated variables are considered. A significant amount of variation for strategy 8 is due to changes in the fresh feed flow, whereas this is not so for strategy 6. This result has a physical justification. Strategy 8 controls production rate with column feed rate, so production rate changes are reflected directly to the reactor level, which is controlled by the fresh feed rate. Consequently, the fresh feed rate will move in almost direct response to production rate changes. Conversely, strategy 6 uses bottoms flow rate to control production. The impact on the reactor level, and consequently the fresh feed rate, is secondary in nature; the reactor level is impacted by column feed rate changing to control the level in the base of the column.

5.5.3 Comparison of Steady-state and Dynamic Results

The correspondence between the steady-state measures and the dynamic results is good. Consider first the comparison of measured variables variations and the weighted sum of the sensitivities of the RCG. Table 5.19 displays the relative rankings of the strategies based on these two measures. Three sets of strategies have roughly the same weighted sensitivity values: 6 and 9; 2 and 5; and 10 and 12. For these sets of strategies, the relative ordering within the rather arbitrary, in that the values of the measure are approximately equal. Strategies 8, 11, and 12 have approximately equal SSE values. With these possible shifts in relative ranking considered, the correspondence between weighted sensitivity and SSE values is pretty good.

For variation in the manipulated variables, there are two sets of numbers to consider. Table 5.20 shows the weighted manipulated variables sensitivity, the SSU value for all manipulated variables, and the SSU value for the manipulated variables associated with composition control. For the weighted sensitivities, strategies 9 and 11 have roughly the same value, as do 8, 10, and 12. Three pairs of control strategies have approximately equal SSU values when all five manipulated variables are considered: 6 and 10; 1 and 4; and 2 and 7. The fact that these strategies could reasonably be ordered different was kept in mind when the following discussion was written. When only the variation in the manipulated variables associated with composition control are considered, strategies 2, 4, and 5 have less variation than predicted by the weighted sum of the RDG sensitivities. When all manipulated variables are considered, strategies 1, 4, and 6 have less variation than expected. As discuss previously, the

TABLE 5.19

Comparison of Steady-state and Dynamic Rankings for Transformation of Variation to Measured Variables - Production Rate Disturbance

$\sum a_i(\alpha_i \text{ sens})$ rank	$\sum_{i=1}^{2} SSE_i$ rank
11	6
8	12
9	8
6	11
5	10
2	1
10	4
12	7
1	9
4	5
3	3
7	2

TABLE 5.20

Comparison of Steady-state and Dynamic Rankings for Transformation of Variation to Manipulated Variables - Production Rate Disturbance

$\sum b_i(\beta_i \text{ sens})$ rank	$\sum_{i=1}^{2} SSU_i$ rank	$\sum_{i=1}^{5} SSU_i$ rank
11	11	10
9	8	6
8	5	4
10	2	1
12	10	12
6	4	2
7	12	7
5	7	11
3	1	8
2	6	5
1	9	9
4	3	3

measure that includes the variability in all manipulated variables will be the focus. Strategies 1 and 4 do have substantially less variation than predicted by the steady-state measure. Strategy 6 has less variation than predicted, but would be selected as one of the "good" control strategies based on the steady-state information.

Table 5.21 displays the overall weighted sensitivity, total dynamic variation with all manipulated variables considered, and total dynamic variation with only the manipulated variables associated with composition control included. Three strategies, 5, 10, and 12, have approximately equal values for the overall weighted sensitivity. Four pairs of strategies have roughly equivalent values for overall dynamic variability when only two manipulated variables are considered: 8 and 11; 10 and 12; 1 and 4; and 6 and 7. Three pairs have equivalent values when all manipulated variables are considered: 6 and 10; 1 and 4; and 7 and 11. When an overall variation measure is considered, only strategies 1, 4 and 7 have less variation than predicted for both of the cases considered (all manipulated variables or only composition control manipulated variables). Strategies 1, 4 and 7 employ a DQ strategy on the distillation column. As discussed for the feed composition disturbance, these strategies pair an important manipulated variable (distillate) with an unimportant measured variable (distillate composition) and an unimportant manipulated variable (reboiler duty) with an important measured variable (bottoms composition). This situation leads to controller tuning that is loose for the distillate composition and tight for the bottoms composition, yielding less measured variable variation than predicted and more manipulated variable changes than predicted. Additionally, strategy 7 has a good value for the disturbance rejection index (due primarily to low manipulated variable movement

TABLE 5.21

Comparison of Steady-state and Dynamic Rankings for
Overall Transformation of Variation
- Production Rate Disturbance

$\sum b_i(\beta_i \text{ sens}) +$ $\sum a_i(\alpha_i \text{ sens})$ rank	$\sum_{i=1}^{2} SSU_i +$ $\sum_{i=1}^{2} SSE_i$ rank	$\sum_{i=1}^{5} SSU_i +$ $\sum_{i=1}^{2} SSE_i$ rank
11	8	6
8	11	10
9	12	1
6	10	4
10	4	12
12	1	7
5	7	11
2	6	8
1	5	5
4	9	2
3	3	9
7	2	3

required for a disturbance in the best direction), indicating that relatively small changes in the manipulated variables are required to reject the disturbance.

There are several strategies for each situation that have more variation than predicted by the steady-state measures, but again, this behavior is expected since the approach used here focuses solely on steady-state analysis tools. Strategies 10, 11, and 12 were among those strategies with good responses in terms of overall variation, and each of these strategies was among the best strategies from a steady-state perspective.

The magnitude of the manipulated variable gains representing the movement necessary to reject a given disturbance can be compared to the dynamic results. Table 5.22 displays the variability in the manipulated variables associated with the composition controllers and the weighted disturbance sensitivity of the manipulated variable. Looking at the data concerning the manipulated variables associated with the bottoms composition controllers, there is a relatively good agreement between the steady-state numbers and the dynamic numbers, in a general sense. Strategies with large weighted disturbance sensitivities have large variation in the manipulated variable for the dynamic response. Conversely, strategies with low weighted manipulated variable disturbance sensitivities have smaller variations in the manipulated variables. Only strategy 1 had more variation in the manipulated variable associated with bottoms composition control than predicted by the weighted sensitivity. For the data concerning the distillate composition controller, only the data related to strategies that use dual-ended control on the column are analyzed. For these strategies, the weighted sensitivity does a good job of identifying strategies with large variability in the manipulated variable. Strategies

TABLE 5.22

Weighted Manipulated Variable Disturbance Sensitivity Evaluation - Production Rate Disturbance

Strategy	$w_{m_{x_B}}\left(\beta_{m_{x_B}}\ \text{sens}\right)$	SSUx10^2	$w_{m_{x_D}}\left(\beta_{m_{x_D}}\ \text{sens}\right)$	SSUx10^2
1	0.173	0.157	1.559	1.935
2	1.673	3.283	---	0.0
3	1.318	0.393	---	0.0
4	0.153	0.055	1.887	1.500
5	1.078	0.382	---	0.027
6	0.175	0.038	0.436	0.087
7	0.082	0.009	0.743	1.778
8	0.082	0.048	0.208	0.0
9	0.191	4.115	---	0.0
10	0.304	1.133	---	0.0
11	0.230	0.012	---	0.0
12	0.319	1.270	---	0.0

6, 7, and 8 have small steady-state measures, and 6 and 8 have low dynamic variability in the manipulated variable responsible for distillate composition control. The other three strategies that use dual-ended control have significantly larger variation in the associated manipulated variable.

The agreement between the weighted sensitivity for the measured variables and the associated variability was not as strong. Table 5.23 displays the weighted sensitivities for bottoms composition and distillate composition and the sum of squared errors for both compositions. The agreement between the steady-state measures and the SSE values is good. For the bottoms composition, most strategies with low weighted sensitivity values also have low variability. However, strategies 10 and 12 do have lower sum of squared errors for the bottoms composition than indicated by the weighted sensitivity. The agreement between the steady-state and dynamic data for the distillate composition is also strong. All strategies, with the exception of strategy 4, with low variability in the distillate composition also have a low weighted disturbance sensitivity.

The RDG and RCG values for strategy 6 were compared with the variability in the two compositions and their associated manipulated variables for the various combinations of controllers status. Figure 5.15 shows this data. Calculating ratios that are analogous to the RDG and RCG values, there is good agreement between the dynamic results and the steady-state performance measures. With only the distillate composition controller in automatic, the variation in the reflux flow was larger than when both controller were in auto. This corresponds with an RDG value between negative one and one. Also, the variation in the energy input was less with only the bottoms composition

TABLE 5.23
Weighted Measured Variable Disturbance Sensitivity Evaluation -
Production Rate Disturbance

Strategy	$w_{x_B}(\alpha_{x_B}$ sens)	$SSE_{xb}x10^2$	$w_{x_D}(\alpha_{x_D}$ sens)	$SSE_{xd}x10^2$
1	1.405	0.045	2.811	0.735
2	2.871	0.105	2.127	19.367
3	3.138	1.504	0.904	9.334
4	1.239	0.234	3.397	0.676
5	2.609	0.485	0.395	3.056
6	1.416	0.037	0.898	0.150
7	0.827	0.424	5.909	0.842
8	0.828	0.028	0.343	0.449
9	1.195	0.345	0.342	0.944
10	3.127	0.010	0.386	0.707
11	0.449	0.005	0.406	0.592
12	3.410	0.025	0.207	0.448

	Controller Status			
Variation in:	Both Auto	x_B auto	x_D auto	Both Manual
Reflux Flow	0.0435	---	0.0691	---
Steam Temperature	0.0073	0.0066	---	---
Bottoms Composition	5.01E-4	4.87E-4	1.69e-3	2.76e-3
Distillate Composition	1.12E-3	3.56E-3	2.71E-4	4.15E-3

		RDG
RefluxFlow	$SSU_{auto} / SSU_{x_D\ only} = 0.0435 / 0.0691 = 0.63$	-0.51
Steam Temperture	$SSU_{auto} / SSU_{x_B\ only} = 0.00734 / 0.00660 = 1.11$	1.27

		RCG
Bottoms Composition	$SSE_{x_D\ only} / SSE_{man} = 1.69E-3 / 2.76E-3 = 0.61$	0.47
Distillate Composition	$SSE_{x_B\ only} / SSE_{man} = 3.56E-3 / 4.15E-3 = 0.86$	-0.19

FIGURE 5.15

Dynamic Response Data for Strategy 6 -
Production Rate Disturbance

controller in automatic than with both controller in automatic, which corresponds with and RDG value greater than one. The variation in the composition also agreed with the RCG values. The variation in the bottoms composition was less with the distillate controller in automatic than it was with both controllers in automatic. Distillate composition variation was smaller with the bottoms composition controller in automatic than with both controller in manual.

These results reaffirm some of the assertions made previously regarding the process. For most strategies that control the component inventories without controlling the distillate composition, it is best to do single-ended control on the column. For these strategies, controlling the distillate composition increases the variation in product quality (bottoms composition). Additionally, strategies that utilize column feed rate or distillate rate to determine production offer better transformation of variation properties. The column control strategy that defied categorization, based on the steady-state analyses, is DQ. The variation in the manipulated variables for all three strategies that employ the DQ strategy was lower than predicted. The response of these strategies was sluggish however, as the distillate composition controller was tuned loosely.

5.6 Comparison of Results for the Two Disturbances

Every process is subject to more than one form of disturbance. It is important that any control system design procedure used consider each of these disturbances. For process 1, there are many commonalties between the results of the analyses for the two disturbances. Strategies 4 and 6 have large disturbance condition numbers for both disturbances. Strategies 7, 10, and 12 have good values for the disturbance rejection index for each disturbance. For a

production rate disturbance, strategies 8 and 9 also have favorable values for the disturbance rejection index. Strategies 1, 4, and 6 have unfavorable values of the disturbance rejection index in both cases. Strategy 3 has an unfavorable disturbance rejection index for a production rate disturbance. The maximum singular values are independent of the disturbance considered and thus are identical for the two disturbance analyses. No strategies are favorable for one disturbance and unfavorable for the other disturbance based on the disturbance condition number and disturbance rejection index.

For both disturbances, the absolute value of the RCG for the distillate controller is greater than one for strategies 1, 4, and 7. The RCG for the distillate composition controller is also greater than one for strategy 10 with a feed composition disturbance. The absolute value of RCG for the bottoms composition controller is greater than one for strategies 2, 3, 5, 9, 11, and 12. For a production rate disturbance, the RCG for the bottoms composition controller for strategy 10 is also greater than one. The RCG results agree well for a feed composition disturbance and a production rate disturbance. Additionally, the dynamic tuning procedure detuned the distillate controller for the same strategies with each disturbance.

The absolute value of the RDG for the distillate composition controller is greater than one for strategies 1 and 4, while the RDG for the bottoms composition controller is greater than one for strategies 6, 9, 11, and 12 with both disturbances. Strategy 8 has large RDG values for both composition controllers for a production rate disturbance. Only strategy 8 looks good from one disturbance analysis and bad from the other disturbance analysis.

Strategies 1 and 4 have large weighted measured variable disturbance sensitivity values for both disturbances. Strategy 2 has a large value for a feed composition disturbance, while strategies 3 and 7 have large values for a production rate disturbance. Also, strategies 6, 8, and 9 are among the strategies with the lowest values for both disturbances. The results for the weighted measured variable disturbance sensitivities values agree well for the two disturbances.

Strategies 8, 9, 10, 11, and 12 have the lowest weighted manipulated variable disturbance sensitivities for both disturbances. Additionally, strategies 1, 2, 3, 4, and 5 all have poor disturbance sensitivities for the manipulated variables with both disturbances. The general agreement of the weighted manipulated variable disturbance sensitivity results for the two disturbances is good.

The overall weighted disturbance sensitivities are also similar for both disturbances. Strategies 6, 8, 9, and 11 have the best values for each disturbance. Strategies 1, 3, and 4 have poor overall disturbance sensitivity values for both disturbances. Additionally, strategies 2 and 5 look bad for a feed composition disturbance and strategy 7 looks bad for a production rate disturbance. Only strategy 7 looks good for one disturbance (feed composition disturbance) and bad for the other disturbance (production rate disturbance).

The dynamic results for the two different disturbances share a common group of control strategies with poor responses. Strategies 2 and 3, have large variations in the controlled variables for both disturbances. The variability in the controlled variables is low for both disturbances for strategies 10, 11, and 12. None of the strategies with large SSE values for either disturbance have small

SSE values for the other disturbance. The variation in the manipulated variables is similar for the two disturbances considered, but different for the two dynamic measures. When only the composition control manipulated variables are considered, strategies 2, 5, and 8 have low variation. However, when all manipulated variables are included in the analysis, strategies 1, 4, and 10 have low variation for both disturbances. The possible source of conflict between the two SSU values was discussed previously. Strategies 2, 3, and 5 all have poor overall responses to both disturbances and both measures of dynamic performance. Strategies 10, 11, and 12 have good responses for both disturbances and performance measures. When all manipulated variables are considered, strategies 1 and 4 offer good overall dynamic response to a production rate disturbance.

The correspondence between the results for the two disturbances considered is good. The steady-state measures identify a common group of strategies (1, 2, 3, and 4) as having poor variation propagation characteristics. Additionally, strategies 6, 8, 10, 11, and 12 were identified as the most promising for each disturbance, and the dynamic responses of these strategies were among the best attained.

5.7 Impact of Process Nonlinearities on Steady-state Results

An issue that is related to all of the prior discussion regarding steady-state analyses is the impact of the process nonlinearities on the results. For a nonlinear process, the operating point serves a tremendous role in determining the gain of the process. Although this process is ideal in many ways, it is nonlinear in nature. To evaluate the impact of the nonlinearities on the results of

the analyses, gains were calculated at several different operating points. The distillate composition was varied from 0.92 to 0.98 and the bottoms composition was varied from 0.002 to 0.02. For both cases, the relative gain decreases as the composition increases. This is expected from the fact that high purity columns are, in general, more interactive and difficult to control than low purity columns. Table 5.24 shows the relative gains, RDG, and RCG values (for both disturbances) at the various operating points for strategy 1. The RDG and RCG values remain relative constant for both disturbances as the distillate composition varies from 0.92 to 0.955. However, these parameters change substantially when the distillate composition goes to 0.98; the RDG and RCG values associated with the distillate composition controller change sign and the values for the bottoms composition controller rise substantially. The RDG and RCG values for the bottoms composition controller remain relatively constant for both disturbances as the bottoms composition varies from 0.002 to 0.02. However, the RDG and RCG values for the distillate composition controller do vary as the bottoms composition spans this range. The RDG and RCG values increase as the amount of impurity in the bottoms stream increases (mole fraction of J increases).

Similar data was evaluated for strategy 10. Table 5.25 shows the relative gain, RDG and RCG values. As with strategy 1, the relative gain decreases as the distillate composition or bottoms composition increase. This corresponds to a situation where the relative gain is decreasing as the purity at the top of the column increases or the purity at the bottoms of the column decreases. Outside of a limited range around the base case, the RDG and RCG values do not stay constant for either disturbance. Dramatic changes in both the RDG and RCG

TABLE 5.24

RGA, RDG, RCG Values over a Range of Operating Points - Strategy 1

x_D	x_B	λ	Production Rate Disturbance $\beta(x_D)$	$\beta(x_B)$	$\alpha(x_D)$	$\alpha(x_B)$	Feed Composition Disturbance $\beta(x_D)$	$\beta(x_B)$	$\alpha(x_D)$	$\alpha(x_B)$
0.920	0.0105	0.893	1.33	0.67	1.49	0.76	1.25	0.62	1.40	0.70
0.945	0.0105	0.781	1.34	0.48	1.72	0.61	1.26	0.42	1.61	0.54
0.950	0.0105	0.750	1.34	0.43	1.79	0.58	1.26	0.38	1.68	0.51
0.955	0.0105	0.714	1.34	0.39	1.88	0.54	1.25	0.34	1.75	0.47
0.980	0.0105	0.371	-0.38	0.68	-1.02	1.84	-0.31	0.71	-0.83	1.93
0.950	0.0020	0.962	1.03	0.42	1.07	0.44	1.02	0.36	1.06	0.37
0.950	0.0103	0.751	1.33	0.43	1.77	0.57	1.25	0.37	1.66	0.50
0.950	0.0105	0.750	1.34	0.43	1.79	0.58	1.26	0.38	1.68	0.51
0.950	0.0107	0.746	1.35	0.43	1.81	0.58	1.26	0.38	1.69	0.51
0.950	0.0200	0.592	1.91	0.41	3.24	0.69	1.63	0.36	2.74	0.61

TABLE 5.25

RGA, RDG, RCG Values over a Range of Operating Points - Strategy 10

x_D	x_B	λ	Production Rate Disturbance $\beta(x_D)$	$\beta(x_B)$	$\alpha(x_D)$	$\alpha(x_B)$	Feed Composition Disturbance $\beta(x_D)$	$\beta(x_B)$	$\alpha(x_D)$	$\alpha(x_B)$
0.920	0.0105	0.305	0.058	1.165	0.192	3.815	0.058	1.162	0.189	3.815
0.945	0.0105	0.391	0.064	1.120	0.165	2.838	0.060	1.111	0.154	2.838
0.950	0.0105	0.424	0.064	1.102	0.151	2.575	0.059	1.092	0.138	2.575
0.955	0.0105	0.545	0.459	3.428	0.842	6.217	0.458	3.387	0.840	6.217
0.980	0.0105	0.291	-0.075	0.854	-0.259	2.875	-0.087	0.837	-0.299	2.875
0.950	0.0020	0.046	0.004	1.097	0.093	23.890	0.005	1.108	0.101	24.114
0.950	0.0103	0.423	0.060	1.096	0.143	2.589	0.055	1.087	0.131	2.568
0.950	0.0105	0.424	0.064	1.102	0.151	2.597	0.059	1.092	0.138	2.575
0.950	0.0107	0.439	0.076	1.117	0.173	2.545	0.071	1.107	0.161	2.523
0.950	0.0200	0.669	0.162	1.106	0.242	1.654	0.140	1.088	0.210	1.627

values are seen as the distillate composition goes to 0.92 or 0.98, and as the bottoms composition goes to 0.002 and 0.02. All RDG and RCG values decrease as the distillate composition or bottoms composition increase.

It is important to recognize the impact of the operating point on the analysis of the results. While only two strategies were considered, the strong dependence of the results on the specified product compositions is clear. It is suspected, although not verified that for this process, the relative orderings of the strategies will not be significantly altered due to small changes in the product composition specifications.

5.8 Process 1 Results Summary

Several general conclusions can be drawn from the analysis performed regarding control of Process 1. The first observation deals with answering the question concerning whether to use dual-ended or single-ended control on the distillation column. If the control strategy being considered maintains component inventories without controlling the distillate composition, use single-ended control on the column. The reactor volume can be used as a capacity to damped some of the disturbance, and the reaction will correct for an persistent changes in operating condition. Controlling the distillate composition, in most cases, simply serves to increase the variation at the bottom of the column. The overall variability of eight of the strategies was reduced by not controlling the distillate composition. Three of the four strategies that did control the distillate composition used a DQ strategy on the column, and need the distillate composition controller to be active to control component inventories in the

column. Additionally, for these strategies, the distillate composition controller was tuned loosely.

The production rate for this process should be set with a flow internal to the process. Several factors contribute to this conclusion. First, the critical unit within the process is the distillation column. Maintaining a constant feed rate to this unit can reduce the variability in the product. Second, setting the production rate internal to the process allows the control strategy to utilize the fresh feed rate (an inexpensive flow) to transform some variation out of the process. Strategies that use column feed rate or distillate rate to determine production have lower total variation than strategies that use bottoms flow or fresh feed rate for production control. For a feed composition disturbance, strategies 7, 8, 9, 10, 11, and 12 have lower variation than strategies 1, 2, 3, 4, and 5. Strategy 6 is the only strategy that defies the trend and has low overall variability. For a production rate disturbance, strategies 1, 4, and 6 have lower variability than predicted by the steady-state measures.

Strategies 8, 9, 10, 11, and 12 have the best steady-state numbers when both disturbances are considered. Strategies 8, 9, and 12 would be further identified as good based on the open-loop disturbance gains. To make the final differentiation between strategies, dynamic must be considered. Strategies with good steady-state properties can exhibit poor dynamic response. But the underlying factor in control system design is process understanding. The tools applied to this process are merely a method of furthering process understanding to benefit the design of the control system.

CHAPTER 6

PROCESS 2 RESULTS

Process 2 is very different from process 1. It is much more complicated in that it involves many more components and several competing reactions. A vapor material recycle and several independent feed sources add to the process complexity. Additionally, the process is open-loop unstable. The approach taken to control system design for strategy 1 must be adapted to be utilized with process 2. Open-loop disturbance gains cannot be calculated. Closed-loop gains are calculable, given a control strategy that stabilizes plant operation. Also, an factor that complicates the analysis is that the structure of the process is such that the controller pairing options are much more difficult to identify than with process 1.

6.1 Component Inventory Analysis

The most significant aspect of control for process 2 appears to be component inventory control. With multiple components present in a reaction/separation process that produces two products and involves several material recycles, it is imperative to control all component inventories. Figure 6.1 displays the component inventory table for process 2. Eight components are present within the plant, six streams enter or leave the process, and four reactions take place within the reactor. Even if every stream entering or leaving the process is used to control a component inventory, two inventories will still be left to be controlled by some other mechanism. The reactions are the primary

Component	Input	Generation	Output	Consumption
A	1,4	0	9, 11	Rxn 1, 2, 3
B	1,2,4	0	9, 11	0
C	4	0	9, 11	Rxn 1, 2
D	2	0	9, 11	Rxn 1, 4
E	3	0	9, 11	Rxn 2,3
F	3	Rxn 3,4	9, 11	0
G	0	Rxn 1	9, 11	0
H	0	Rxn 2	9, 11	0

FIGURE 6.1

Process 2 Component Inventory Analysis

other mechanisms available. In regards to the reactions, if the inventories of the reactants are controlled, the inventories of the products will be controlled.

One component inventory that must be controlled with a stream flow is B. Component B is an inert that enters in small quantities in three of the feed streams. It exits primarily in the purge stream. Inventory of B must be controlled with the purge. If B builds up in the system, it will locate itself in the vapor recycle loop. The pressure in the separator should rise if the B inventory goes up, if the inventories of the other non-condensables (A and C) are controlled. Therefore, controlling separator pressure with purge rate should control the B inventory in the process.

The inventory of A is located in the vapor recycle and the stripper vapor inventory. This inventory is controlled by adjusting the ratio of A feed rate to the E feed rate; the ratio is adjusted based on the reactor feed composition samples. Inventory of D is controlled in an analogous manner; the ratio of D feed to E feed is determined by the mole fraction of D in the reactor feed stream The inventory of E is controlled by the E feed being used to control reactor feed rate, while the inventories of the two other major components of the reactor feed (A and D) are controlled.

If the inventories of A, D, and E are controlled, the inventory of F should self-regulate through the reactions; F is produced through reactions involving A, D, and E. The vapor inventory in the stripper is primarily A and C. If the inventory of A is controlled, controlling pressure in the stripper should control the C inventory in the process.

Controlling stripper temperature and maintaining control of the other component inventories should take care of the G and H inventories. However,

the product sample information could be used to determine the setpoint for the stripper temperature controller. The composition of G, the more volatile component, could be used to update the temperature setpoint. This would ensure that no excess G or H is going overhead to the vapor recycle stream.

6.2 Steady-state Analysis

A complication that precludes direct use of the method applied to process 1 is open-loop instability. The instability of the plant centers around the operation of the reactor. This instability dictates that the approach taken for control system design with process 1 can not fully completed. However, parts of the approach to control system design used to process 1 can be adapted to evaluate potential control strategies for process 2. Closed-loop gains will be calculated for potential control strategies. From this data, the weighted sum of manipulated variable gains will be used to compare the strategies. Also, the impact of operational changes on the product composition and product rate will be compared.

Sixteen potential control strategies will be evaluated. Figures 6.2 through 6.9 display the several of the strategy configurations. Strategy 1, shown in Figure 6.2 will be described to illustrate the meaning of the control strategy configuration. Production rate is set at the feed to the reactor. The reactor is the most sensitive unit in the plant, so providing it with a relative constant feed rate will help production. The flow rate to the reactor is maintained by manipulating the E feed rate to the process. This stream was chosen from the three available (A, D, and E feeds) since the problem statement identifies this stream as the one in which variation is least critical. The other feed rates are manipulated by ratio controllers; the flow signal to the ratio controllers is filtered to reduce variability in

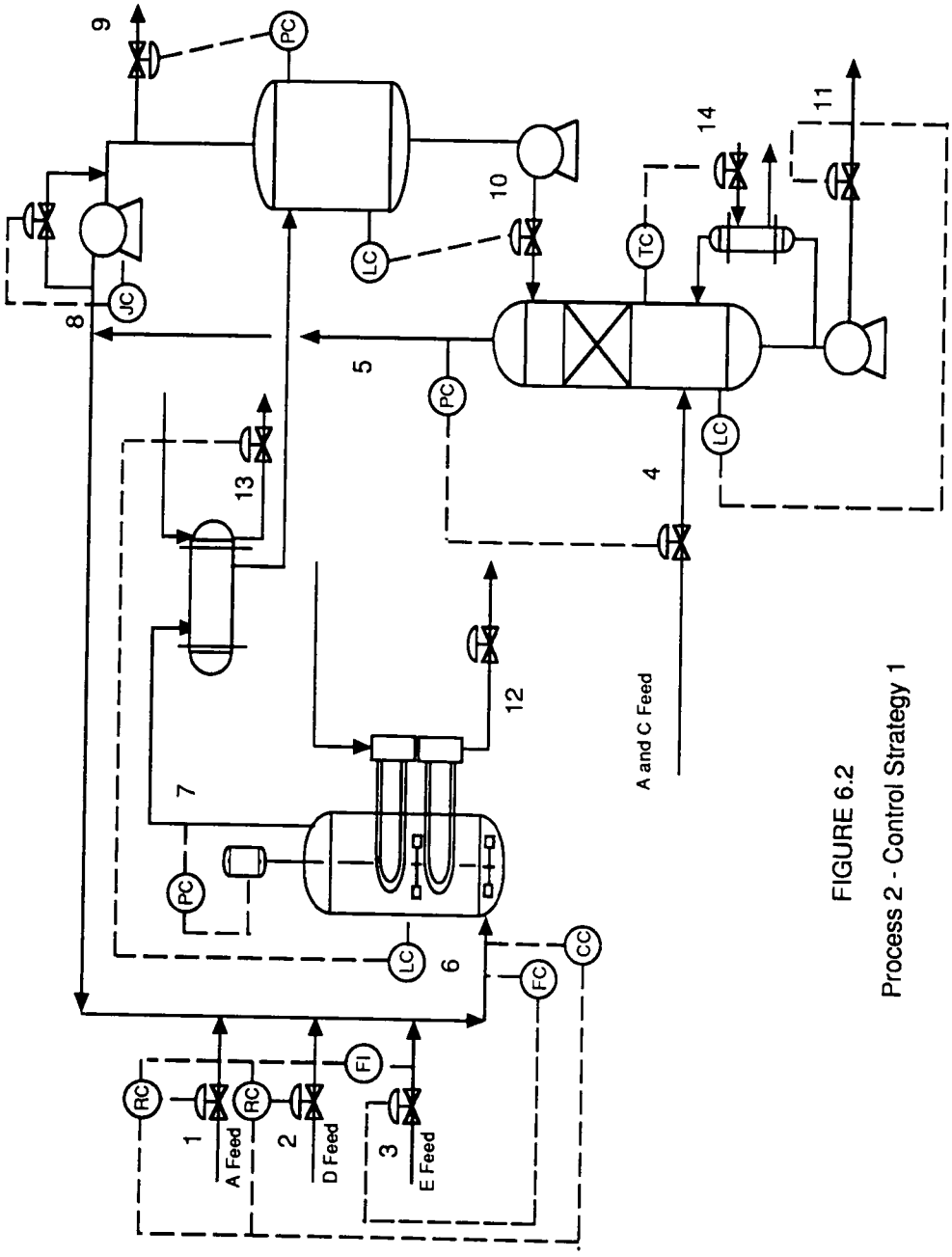

FIGURE 6.2

Process 2 - Control Strategy 1

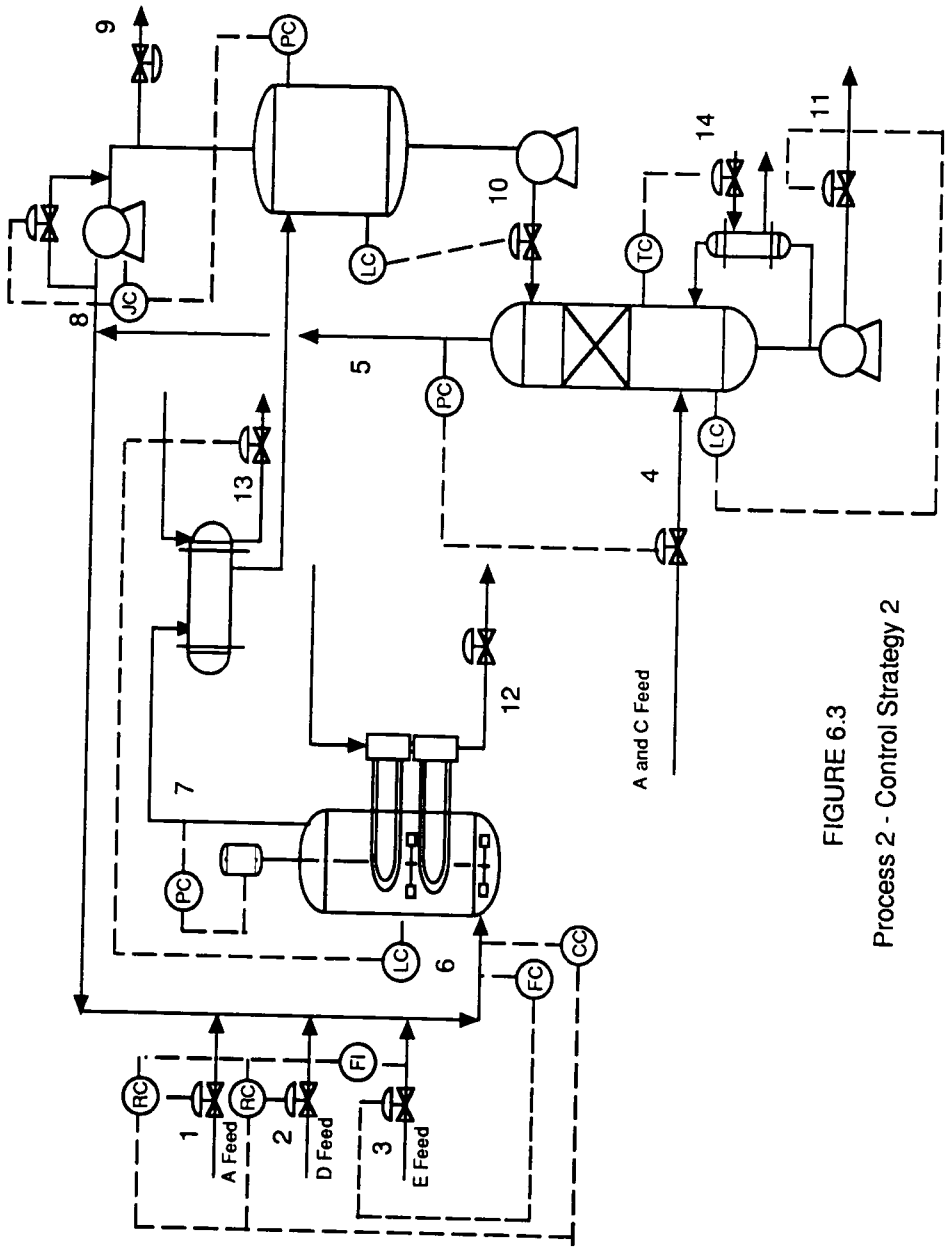

FIGURE 6.3

Process 2 - Control Strategy 2

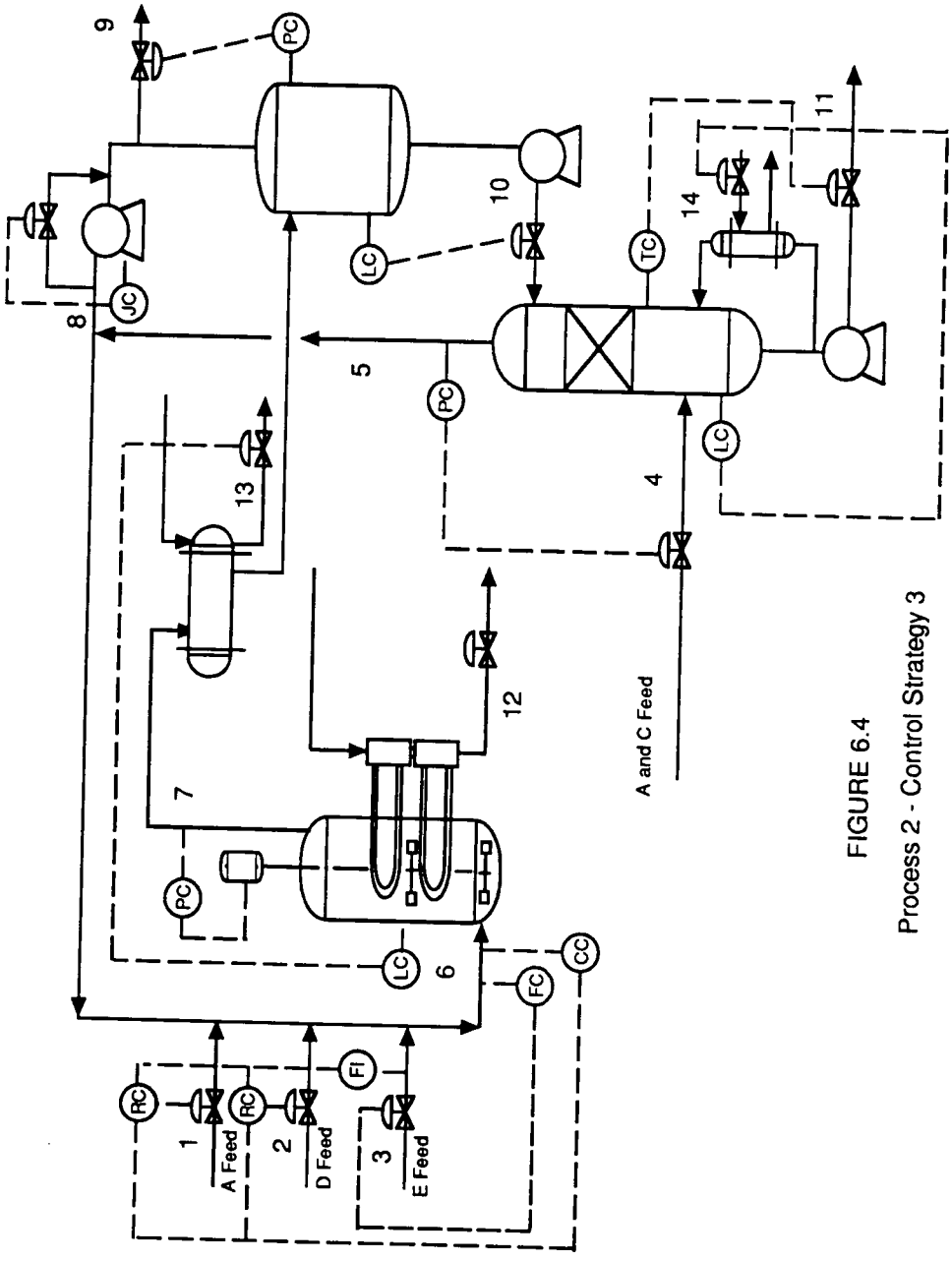

FIGURE 6.4

Process 2 - Control Strategy 3

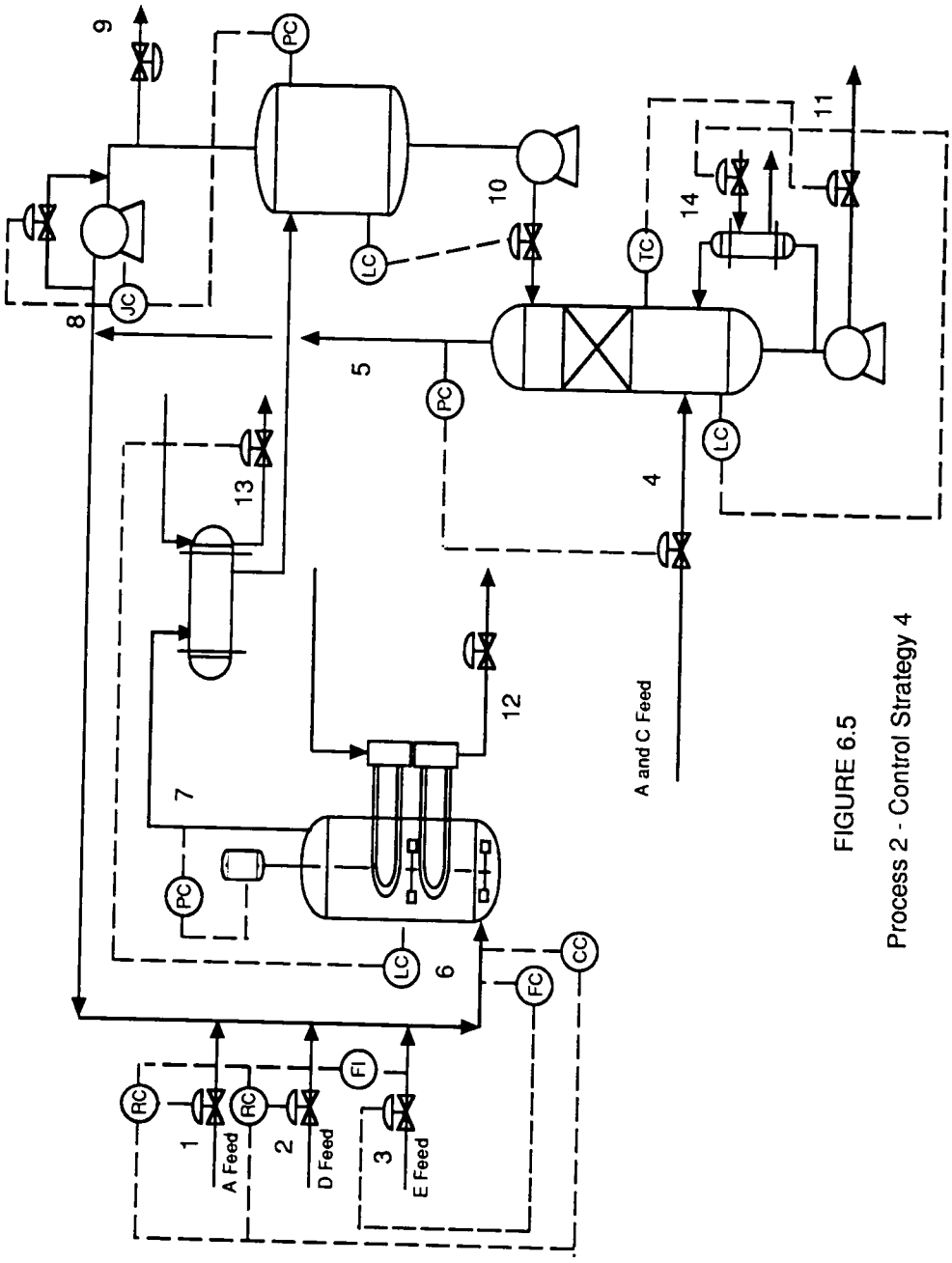

FIGURE 6.5

Process 2 - Control Strategy 4

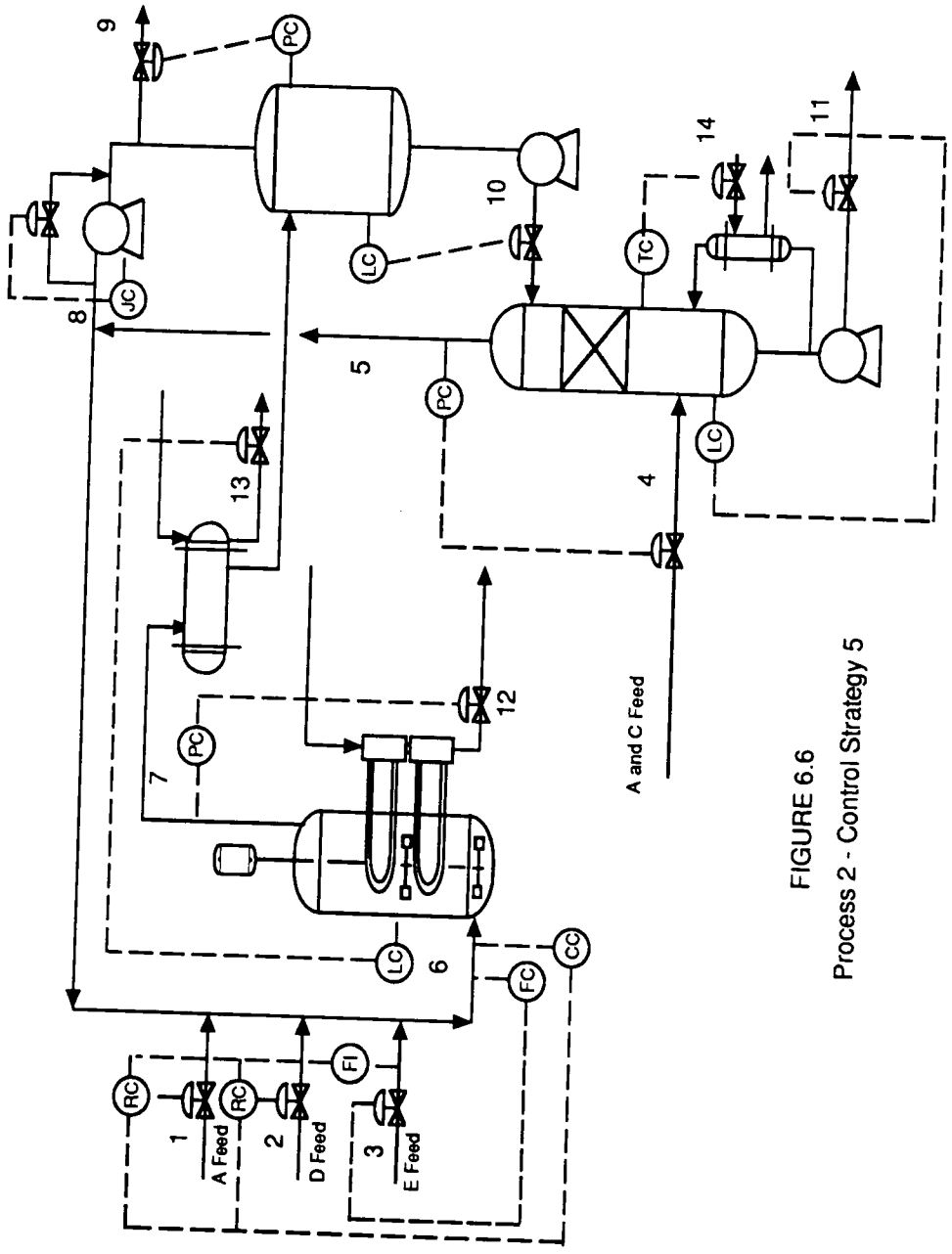

FIGURE 6.6

Process 2 - Control Strategy 5

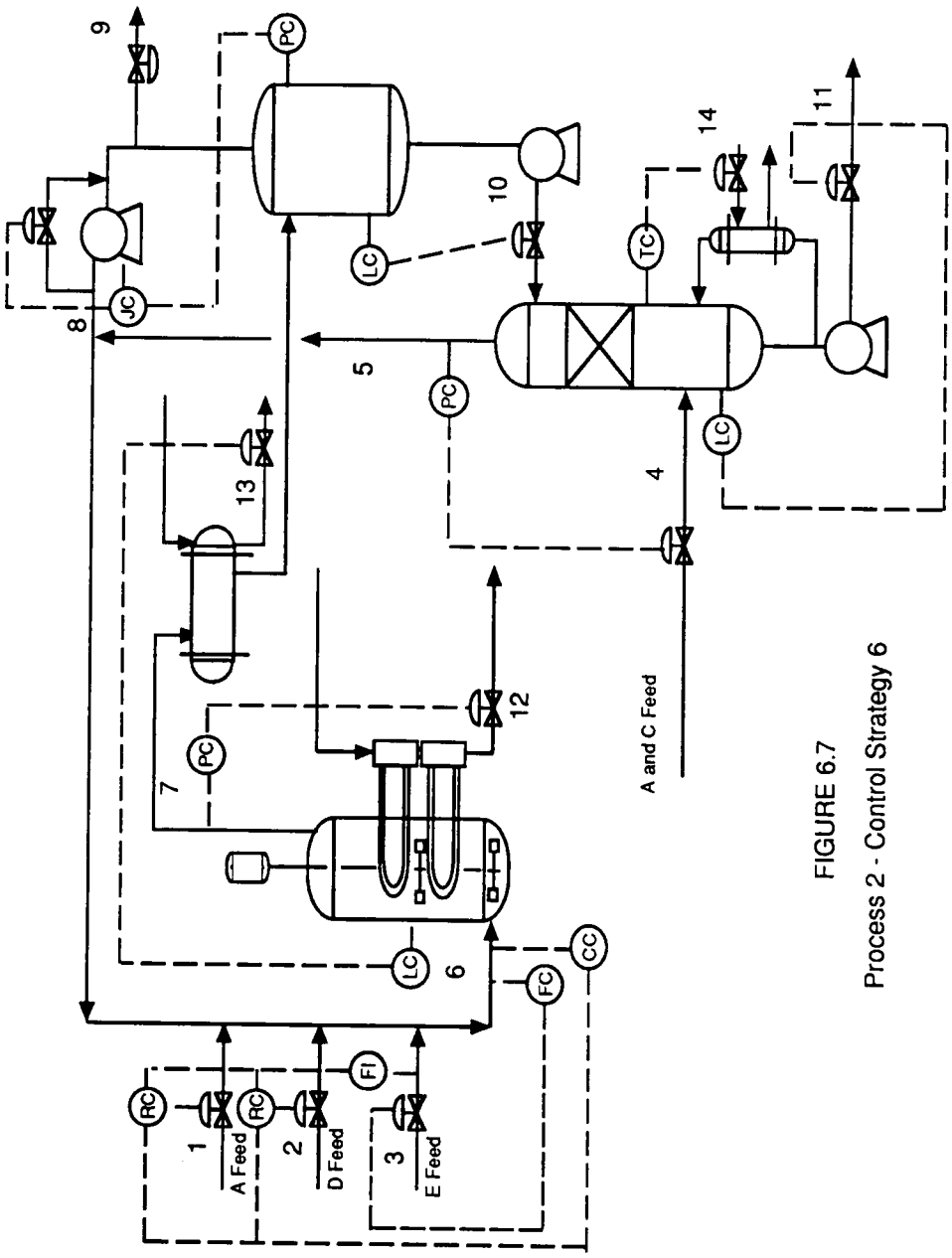

FIGURE 6.7

Process 2 - Control Strategy 6

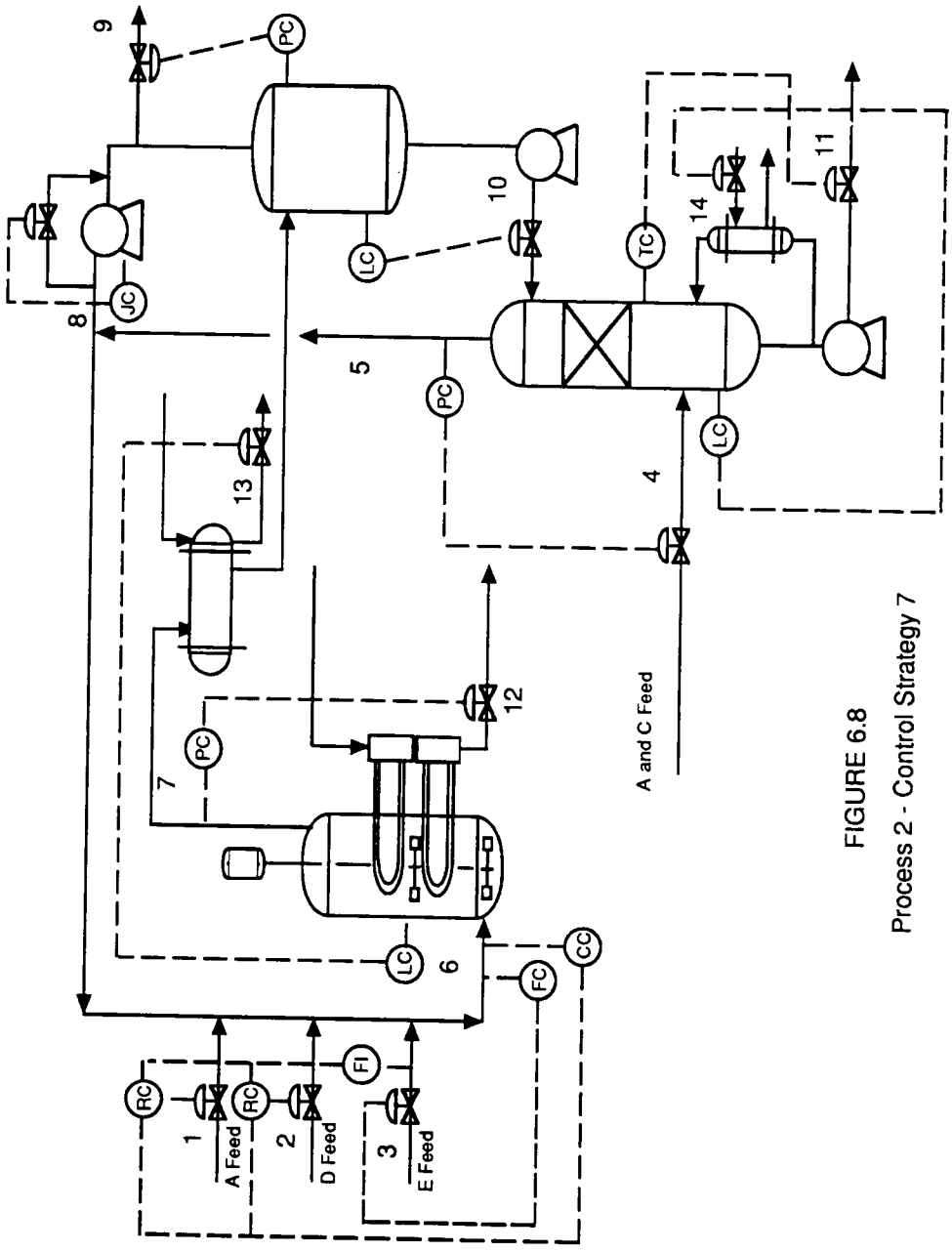

FIGURE 6.8

Process 2 - Control Strategy 7

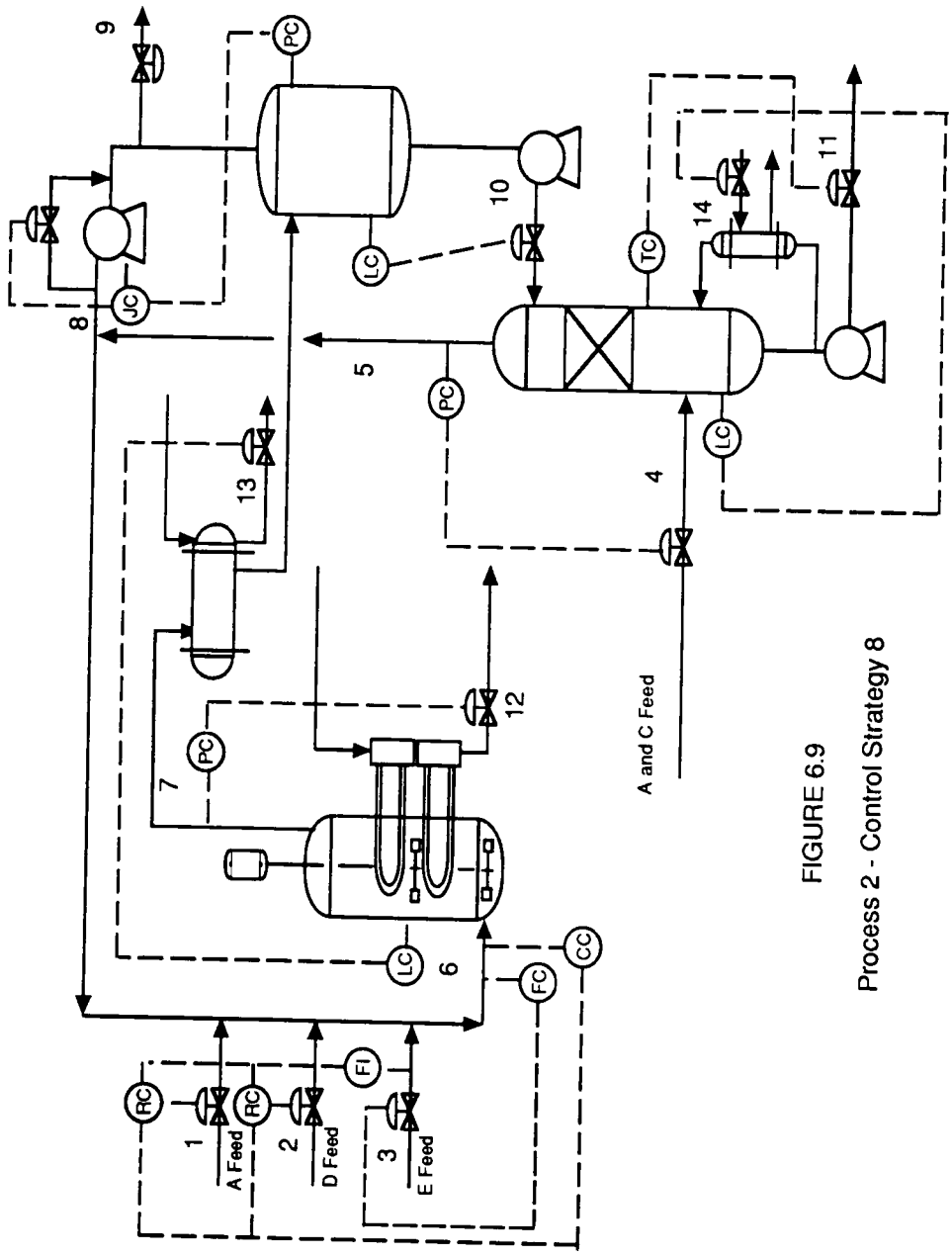

FIGURE 6.9

Process 2 - Control Strategy 8

the A feed and the D feed. The ratios are changed based on SPC charts of the reactor feed composition sample information. Liquid level in the reactor seems, initially, to be difficult to control due to the lack of a liquid flow into or out of the reactor. However, the flow of cooling water through the condenser has a strong impact on the level, and hence is being used to control the level. Compressor work is maintained by the compressor recycle valve, providing a relatively constant recycle of vapor overhead from the separator. Separator pressure is controlled with the purge rate. Liquid flow from the separator is used to control the separator level. The A and C feed rate is used to control pressure in the stripper, while stripper temperature is controlled with the steam flow rate to the boiler at the base of the stripper. Finally, product flow is manipulated to control liquid level in the stripper. Strategy 1A is the same, except that reactor temperature is controlled with reactor cooling water flow. All of the strategies labeled with an A, control reactor temperature, while those without an A control reactor pressure.

To evaluate these strategies based on steady-state transformation of variation properties, several operational changes will be made: (1) change in reactor temperature, (2) change in reactor pressure, (3) change in stripper temperature, and (4) change in production rate. These variables were chosen because of their potential implications on production quality or quantity. The reactor temperature impacts the selectivity between reactions. The reactor pressure represents the vapor holdup in the reactor, both of reactants and products, possibly changing reaction rates as it changes. The stripper temperature determines the separation of products and recycle components.

The production rate valve determines the quantity of products produced. Consequently, these four variables have a large impact on process operation.

Closed-loop gains were calculated for each strategy. The gains were scaled based on operating limits and approximate variable ranges. The relative importance of the variables was specified based on the original problem specifications. The manipulated variables were divided into two classes of importance. Variation in the first group is costly to operation. This group includes: D feed flow, A feed flow, A and C feed flow, purge valve, compressor recycle valve, and agitator speed. These variables were assigned a weight of 0.5. A second group of variables was identified, in which variation is considered to be not as critical. These variables, given a weight of 0.25, include: E feed flow, separator liquid flow, stripper liquid product flow, reactor cooling water flow, and condenser cooling water flow.

Figure 6.10 displays the weighted sum of the manipulated variable movements for each of the strategies, necessary to obtain the desired change in operation. Changes in reactor pressure have a significantly larger impact on both product composition and manipulated variables than do changes in reactor temperature. Consequently, reactor pressure should be controlled.

With this in mind, for a production rate disturbance, strategies 5, 7, and 8 transform the least variation to the measured variables. Strategies 1, 3, and 4 have significantly higher values. Strategies 4, 5, and 8 required the smallest changes in the manipulated variables. For a change in reactor pressure, strategies 1, 5, and 7 have the smallest weighted product composition gains, while strategies 1, 5, 7, and 8 have the smallest changes manipulated variables. When the stripper temperature is changed, strategies 1 and 2 transform the least

Strategy	1	1A	2	2A	3	3A	4	4A
Production Rate:								
$\sum(\partial x_i / \partial c_j)_{c_k=0}$ for product stream	130.3	130.0	---	---	129.9	130.1	129.6	129.5
$\sum w_{m_i}(\partial m_i / \partial c_j)_{c_k=0}$ all manipulated variables	60.4	62.5	---	---	138.4	7.74	31.7	39.6
Reactor Pressure:								
$\sum(\partial x_i / \partial c_j)_{c_k=0}$ for product stream	1.88	---	448.4	---	103.4	---	74.3	---
$\sum w_{m_i}(\partial m_i / \partial c_j)_{c_k=0}$ all manipulated variables	1.99	---	119.1	---	27.8	---	19.4	---

$\sum(\partial x_i / \partial c_j)_{c_k=0}$ - closed-loop gains representing the impact of the specified change on product compositions

$\sum w_{m_i}(\partial m_i / \partial c_j)_{c_k=0}$ - closed-loop gains representing the impact of the specified change on manipulated variables

FIGURE 6.10

Closed-loop Performance Measures - Process 2

Strategy	5	5A	6	6A	7	7A	8	8A
<u>Production Rate:</u>								
$\sum(\partial x_i / \partial c_j)_{c_k=0}$ for product stream	11.6	33.4	---	95.2	42.3	90.6	47.2	29.8
$\sum w_{m_i}(\partial m_i / \partial c_j)_{c_k=0}$ all manipulated variables	52.9	91.2	---	17.1	95.5	135.0	23.8	69.1
<u>Reactor Pressure:</u>								
$\sum(\partial x_i / \partial c_j)_{c_k=0}$ for product stream	22.7	---	270.8	---	63.7	---	74.7	---
$\sum w_{m_i}(\partial m_i / \partial c_j)_{c_k=0}$ all manipulated variables	1.5	---	4.9	---	1.8	---	0.6	---

$\sum(\partial x_i / \partial c_j)_{c_k=0}$ - closed-loop gains representing the impact of the specified change on product compositions

$\sum w_{m_i}(\partial m_i / \partial c_j)_{c_k=0}$ - closed-loop gains representing the impact of the specified change on manipulated variables

FIGURE 6.10 (continued)

Strategy	1	1A	2	2A	3	3A	4	4A
<u>Reactor Temperature:</u>								
$\sum(\partial x_i / \partial c_j)_{c_k=0}$ for product stream	---	7.5	---	0.8	---	18.3	---	4.2
$\sum w_{m_i}(\partial m_i / \partial c_j)_{c_k=0}$ all manipulated variables	---	4.4	---	3.7	---	5.3	---	5.4
<u>Stripper Temperature:</u>								
$\sum(\partial x_i / \partial c_j)_{c_k=0}$ for product stream	0.8	0.4	0.2	1.5	2.6	1.9	1.0	0.2
$\sum w_{m_i}(\partial m_i / \partial c_j)_{c_k=0}$ all manipulated variables	3.3	2.3	2.7	1.8	3.1	2.7	3.8	2.0

$\sum(\partial x_i / \partial c_j)_{c_k=0}$ - closed-loop gains representing the impact of the specified change on product compositions

$\sum w_{m_i}(\partial m_i / \partial c_j)_{c_k=0}$ - closed-loop gains representing the impact of the specified change on manipulated variables

FIGURE 6.10 (continued)

Strategy	5	5A	6	6A	7	7A	8	8A
Reactor Temperature:								
$\sum(\partial x_i / \partial c_j)_{c_k=0}$ for product stream	---	7.5	---	6.5	---	18.3	---	4.2
$\sum w_{m_i}(\partial m_i / \partial c_j)_{c_k=0}$ all manipulated variables	---	7.1	---	4.8	---	7.4	---	8.8
Stripper Temperature:								
$\sum(\partial x_i / \partial c_j)_{c_k=0}$ for product stream	1.9	4.2	1.4	0.8	2.3	1.9	1.9	0.2
$\sum w_{m_i}(\partial m_i / \partial c_j)_{c_k=0}$ all manipulated variables	3.8	2.6	1.2	1.9	2.7	3.2	4.4	2.2

$\sum(\partial x_i / \partial c_j)_{c_k=0}$ - closed-loop gains representing the impact of the specified change on product compositions

$\sum w_{m_i}(\partial m_i / \partial c_j)_{c_k=0}$ - closed-loop gains representing the impact of the specified change on manipulated variables

FIGURE 6.10 (continued)

of this disturbance to the product compositions; the remaining strategies have values that are approximately the same. In terms of manipulated variable changes, strategy 6 have the smallest value, while all of the other strategies have approximately equal weighted changes in manipulated variables.

Based on this data, 5, 7, and 8 would appear to be the most promising, in terms of their variation transformation properties. Further analysis would be done for these strategies to determine the one with the most promising dynamic response. Additionally, if this were a real plant, it would be possible to obtain disturbance data relating to the transformation of feed composition disturbances to product composition and manipulated variables. Also, further consideration should be given to the magnitude of the gains related to control of the reactor. The controller pairings evaluated in this study are just some of the many potential strategies that exist. The unusual dynamics of the reactor and its inherent stability problems makes for a unique application of steady-state analysis tools.

6.3 Process 2 Results Summary

While the analysis of this plant is not as detailed or complete as that performed for process 1, it illustrates the manner in which the approach to control system design could be applied to more complicated processes. If this were a process currently operating, additional information might be attainable. For example, the structure of the simulation did not allow disturbance gains to be calculated for unmeasured disturbance variables, such as feed composition. In an operating plant, it would be possible to obtain some samples at a point in operation where it was felt unmeasured disturbances were occurring. This information could be used with the other data from the plant to gain an

understanding of the impact of the disturbance on operation, thus enabling a more thorough analysis of the control strategy in place.

This process emphasizes the importance of process understanding to control system design. Steady-state analyses will not provide information about complicating dynamics, nor will it answer the question of whether more controller are needed. If all of the control options are known, and prodigious amount of time is available, every options can be explored. Such an evaluation would answer some questions concerning the number and form of controllers and their impact on control. However, in the absence of a cooperative education employee or a graduate student, apriori process understanding is crucial to control system design.

CHAPTER 7

CONCLUSIONS AND RECOMMENDATIONS

Steady-state analysis tools can be effectively used to evaluate the transformation of variation properties of complicated processes. Singular value decomposition, relative disturbance gain, and relative control gain were applied, in a thorough study, to a process with a material recycle stream. Weighting was included in the analysis to incorporate the overall operating objectives of the plant in the control system design and analysis. The method applied served as a first level screening of potential control strategies.

7.1 Control System Design Methodology

Several systematic steps should be undertaken when designing or analyzing a control system for a process.

Step 1: Identify measurements and valves available. For an existing plant, these variables will be, to a large degree, fixed. If the control system design occurs simultaneously with the process design for a new plant, instrumentation can be geared toward control aspects of operation. In such cases, tools such as singular value decomposition and disturbance analyses can guide sensor placement. Sensors should be sensitive to disturbances and relatively independent of each other.

Step 2: Identify options for controlling production rate. The production rate may be set with streams external to the plant or internal to the plant. If the production rate is set with a stream external to the plant (such as with a stream that comes from another process) there may be variability in this flow that the

control strategy must be capable of handling. If the production rate is set internal to the plant, the feed to a critical unit may be held relatively constant, changing only when a different production rate is desired. This can reduce variation in the plant and allow variation to be transformed out of the process, if the variation is relatively harmless in these external locations.

Step 3: Identify the bulk inventories within the plant that must be controlled. For each bulk inventory, a manipulated variable must be available for control. Identify all feasible pairing options between bulk inventories and manipulated variables. Controlling a liquid level that need not be held constant with an important manipulated variable can allow reduction of variation in the critical manipulated variables.

Step 4: Identify quality control variables, such as temperatures and compositions. For the options specified in Step 3, consider the manipulated variables available for quality control. Some strategies from Step 3 may not provide manipulated variables for control of all of the variables identified in this step.

Step 5: Identify component inventories within the plant and the controlling mechanism for each inventory. Component inventories are of particular importance in recycle streams. A unit-operation level approach to control system design and analysis does not recognize the presence of these component inventories. Construction of component inventory tables provides a logical method of looking at component inventory control mechanisms. A control system must maintain component inventories, as well as bulk inventories, to operate in a stable and safe manner. Any potential control strategies that do not control component inventories should be eliminated from further consideration.

Step 6: Calculate steady-state gains. The sensitivity of measured variables to manipulated variables and the sensitivity of measured variables to disturbances must be determined. For a small plant, the gains relating measured and manipulated variables may be determined by calculating the closed loop "design" gains for each production control method and calculating the appropriate inverse matrix. For a plant with more valves that control loops, an optimization of an objective function must be used to determine similar gains. Once calculated, the gains must be scaled to represent the physical situation; dimensionless gains are formed with units of %range sensor/%range valve.

Step 7: Calculate relative disturbance gain and relative control gain values for each potential control strategy. The results of this type of analysis can help determine the control objectives (i.e. the measured variables that should be controlled). Strategies with relative control gain values outside of the negative one to positive one interval for the key variables (or variables) must be given further consideration. The control loop (or loops) that are increasing the variation in the key variable should be deactivated unless doing so creates a component inventory control problem. Additionally, strategies with relative disturbance gain values smaller than negative one or larger than positive one for a critical manipulated variable must be identified. Deactivating the control loop that increases the variation in the key manipulated variable should be done unless doing so creates a component inventory control problem.

Step 8: Calculate the process condition number and relative gain array for each strategy. Small values for the condition number are favored. Strategies with large condition number may not offer sufficient degrees of freedom to achieve the desired control. Values close to one are favored for the relative gain.

Numbers less than one-half indicate that two-interaction between the control loops may be significant.

Step 9: Calculate disturbance condition numbers. The dimension of the system considered must reflect the number of non bulk inventory controllers active in the process. Strategies with small disturbance condition numbers and small values of $1/\sigma_{max}$ are favored. A large disturbance condition number indicates the disturbance occurs in a direction far from the "best" direction of the plant. A large $1/\sigma_{max}$ value indicates the manipulated variable movement required to reject a disturbance, even in the "best" direction, is large. These numbers are combined in the disturbance rejection index, where large numbers are favored. Small values for this index indicate that the manipulated variables must move significantly to reject the impact of the disturbance on the controlled variables.

Step 10: Calculate weighted disturbance sensitivity measures for the measured variables and the controlled variables. The weighting reflects the relative importance of variation in the variables. From this work, it appears that only a low resolution differentiation between weights is required (i.e. it is sufficient to divide the variables into broad groups and assign weights). Critical variables, in which it is desirable to minimize variation receive larger weights that other, less critical variables. The gains used in the determination of these values are again dependent on the automatic-manual status of the controllers in the plant.

Step 11: Eliminate control strategies that have poor variation transformation properties. These strategies are identifiable by large weighted disturbance sensitivity measures. It is crucial to remember that a steady-state analysis will never differentiate between strategies with differing dynamic

characteristics. The steady-state analysis can eliminate strategies that have poor steady-state response characteristics, and these strategies will seldom provide good dynamic results. Consequently, the steps outline here can be used to reduce the list of potential strategies to a manageable level.

Step 12: To select a control strategy from the now reduced list, dynamics must be considered. The steady-state tools discussed in this work will not serve to further assist in the selection of a control strategy. While the steady-state behavior of a process is important, the dynamics cannot be overlooked when selecting a final control strategy.

Many of the tools applied in this work has been discussed frequently in literature. Each is usually presented as a method for differentiating between various control strategies. In reality, every tool has its strengths and weaknesses. Ocassionally, they have been used in conjuction with other tools to assess different aspects of the control problem. However, the majority of applications have been limited to evaluation with a single analysis tool. This approach fails to recognize that there are many different considerations that must be addressed in designing or analyzing a control strategy. Some tools evaluate controllability from the perspective of degrees of freedom. Others consider the interaction between controllers. Another set of tools addresses the impact of disturbance on the process and the control system. This research has demonstrated the importance of considering many different types of analyses. Every steady-state analysis tools applied provided a different piece of information about the process. Taken separately, each is important, but as a whole they provide a framework for understanding the process and the issues concerning control of the process.

7.2 Future Work Recommendations

In applying these tools to process 1, poor control strategies were successfully identified by the steady-state analysis tools. While this application was a success, there are many potential areas for future work along these lines. The most basic extension of this work involves applying the method and tools to a larger and more complicated plant. In this work, the focus was on a simple process reaction/separation process. A single irreversible reaction occurred in the reactor. Frequently, there are multiple reactions which can occur in a reactor, dependent upon the operating conditions. Consideration of a process with multiple reactions would add another dimension to the scope of the problem and potentially make the results more sensitive to operating point. This was the case with process 2, where the additional complication of open-loop instability made it difficult to apply the analysis method. A process with similar stability problems would be an excellent case study for evaluation of the ability to calculate closed-loop gains, and retrieve open-loop information. For a complex plant, specifying a production control method is not sufficient to determine closed-loop "design" gains. In such cases, these gains may be calculated by minimizing an objective function that represents the process operating objectives. Variables that do not change significantly should be considered for production control.

A related issue for further study involves the sensitivity of the analysis to the operating point. Since process 1 is ideal in many ways, it does not exhibit some of the strong nonlinearities displayed by other process, such as high purity distillation columns. Further studies should be performed that address the sensitivity of the steady-state measures to the operating point, when the plant is highly nonlinear. Results indicating a strong impact of the nonlinearities on the

steady-state measures would not invalidate the approach taken here, but would require a modification of the approach. The most probable operating points would have to be identified and the various control strategies studied for each of these conditions. If there were conflicts between the control strategies selected for the different operating points, consideration should be given to the implementation of a control algorithm that would recognize the operating point and adjust the controller structure appropriately.

Another important aspect of understanding the transformation of variation, a more mathematical approach to the issues could be taken. To gain a more fundamental understanding of the factors influencing the transformation of variation, a simplified process model could should be studied. Such a model may involve first order transfer functions to represent the measured variable-manipulated variable and measured variable-disturbance relationships. By obtaining an analytical solution for the process response to a given disturbance, the relative importance of process and controller parameters could be evaluated. For example, it might point out what terms dominate the propagation of variation to the various variables. This information would be valuable for not only selecting a control strategy, but also for determining tuning parameters.

In this work, step disturbances in fresh feed composition and production rate were studied. In reality, a composition disturbance is unlikely to occur as a step. Employing ramps that more accurately approximate true process behavior would add more reality to the dynamic studies. Additionally, there are many other variables that can change within a plant that could be evaluated.

Dynamics play a key role in variation transformation. Understanding the manner in which dead time and time lags impact this is important. The shape of

a resulting disturbance distribution is affected by these factors. It also plays a key role in determining the potential ability of a control strategy to reject a disturbance.

Another key extension of this work focuses on the use of statistical tools. The philosophies of Statistical Process Control (SPC) lend themselves to integration with the type of analysis presented here. SPC focuses on understanding and eliminating the sources of variation, as well as using the variation information for feedback intervention. This perspective of process operation should be important for process control in the continuous process industry. Additionally, two multivariate statistical analysis tools, principal component analysis and partial least squares, can provide information about the relationships between variables and the expected variation of variables. These tools are powerful, and are just beginning to see application in the area of engineering process control. For a process similar to process 2, lab analysis data exists that is not directly utilized in the control system. PCA or PLS could be implemented to include this information to update setpoints, ratios, and other process operating specifications. Also, these analysis tools provide yet another perspective for understanding process behavior.

LIST OF REFERENCES

1. Arkun, Y. and J.J. Downs. *A General Method to Calculate Input-Output Gains and the Relative Gain Array for Integrating Processes.* Computers Chem Eng; 1990. **14**(10): p. 1101-1110.

2. Barnard, G.A., *Control Charts and Stochastic Processes.* J Roy Statis Soc; 1959. **21**: p. 239 -271.

3. Benson, R.S. *The State of Chemical Process Control - An Industrialist's View.* Industrial and Engineering Chemistry Research; 1987. (65): p. 451-452.

4. Box, G. and T. Kramer. *Statistical Process Control and Automatic Process Control - A Discussion.* 1989.

5. Bristol, E.H., *On a New Measure of Interaction for Multivariable Process Control.* IEEE Transactions on Automatic Control; 1966. p. 133-134.

6. Buckley, P.S., *Techniques of Process Control.* 1964, New York: John Wiley and Sons.

7. Canter, D.L., *A Detailed Steady-state Analysis of an Ethanol-water Distillation Column.* 1987, University of Tennessee, Knoxville.

8. Chang, W., *On Using Principal Components before Separating a Mixture of Two Multivariate Normal Distributions.* Appl Statist; 1983. **32**(3): p. 267-275.

9. Douglas, J.M., *A Hierachical Decision Procedure for Process Synthesis.* American Institute of Chemical Engineers Journal; 1985. **31**(3): p. 353.

10. Douglas, J.M., *Conceptual Design of Chemical Processes.* 1988, New York: McGraw-Hill Book Company.

11. Downs, J.J., *The Control of Azeotropic Distillation Columns.* 1982, University of Tennessee, Knoxville.

12. Downs, J.J., *Institute for Continuous Process Industries.* 1990, University of Tennessee.

13. Downs, J.J. and E.F. Vogel. *A Plant-Wide Industrial Process Control Problem.* in *American Institute of Chemcial Engineerings Annual meeting.* 1991. Chicago, IL.

14. Fisher, W.R., *Synthesis of Steady-State Control Structures for Complete Chemical Plants.* 1985, University of Massachusetts, Amherst.

15. Fisher, W.R., M.F. Doherty, and J.M. Douglas. *Operating Heuristics for the Control of Complete Chemical Plants.* in *American Control Conference.* 1985.

16. Fisher, D.G., *Process Control: An Overview and Personal Perspective.* Can J Chem Eng; 1991. **69**: p. 5-26.

17. Flurry, B.W., *Understanding Partial Statistics and Redundancy of Variables in Regression and Discriminate Analysis.* Amer Statist; 1989. **43**(1): p. 27-31.

18. Geladi, P. and B.R. Kowalski, *Partial Least-Squares Regression: A Tutorial.* Analytica Chimica Acta; 1986. : p. 1-17.

19. Geladi, P. and B.R. Kowalski, *An Example of 2-Block Predictive Partial Least-Squares REgression with Simulated Data.* Analytica Chimica Acta, 1986. **185**: p. 19-32.

20. Govind, R. and G.J. Powers, *Control System Strategies.* American Institute of Chemical Engineers Journal; 1982. **23**(3): p. 83.

21. Grosdidier, P. and M. Morari, *Closed-Loop Properties from Steady-State Gain Information.* Industrial and Engineering Chemistry Fundamentals; 1985. **24**: p. 221-235.

22. Grosdidier, P. and M. Morari. *Analysis of Interactions Using Structured Singular Values.* in *American Control Conference.* 1986.

23. Harris, T.J. and W.H. Ross, *Statistical Process Control Procedures for Correlated Observations.* Can J Chem Eng; 1991. **69**: p. 48-57.

24. Helland, I.S., *On the Structure of Partial Least Squares Regression.* Commun Statist - Simula; 1988. **17**(2): p. 581-607.

25. Johnson, R.D. and G.W. Barton, *Design and Performance Assessment of Control Systems Using Singular Value Analysis.* Industrial and Engineering Chemistry Research; 1987. **26**: p. 830.

26. Kaplan, C.R. and J.W. Gentry, *Use of Condition Numbers for Shortcut Experimental Design.* American Institute of Chemical Engineers Journal; 1987. **33**(4): p. 681.

27. Kelly, S.J., J.F. MacGregor, and T.W. Hoffman, *Control of a Continuous Polybutadience Polymerization Reactor Train.* Can Jour Chem Eng; 1987. **65**: p. 852-857.

28. Klema, V.C. and A.J. Laub, *The Singular Value Decomposition - Its Computation and Some Applications.* IEEE Transactions on Automatic Control; 1980. **25**(2): p. 164.

29. Kramer, .A., *Nonlinear Principal Component Analysis Using Autoassociative Neural Networks.* AIChE J; 1991. **37**(2): p. 233-243.

30. Kresta, J.V., J.F. MacGregor, and T.E. Marlin, *Multivariate Statistical Monitoring of Process Operating Performance.* Can J Chem Eng; 1991. **69**: p. 35-47.

31. Krzanowski, W.J., *Selection of Variables to Preserve Multivariate Data Structure, Using Principal Components.* Appl Stat; 1987. **36**(1): p. 22-33.

32. Lau, H., J. Alvarez, and K.F. Jensen, *Synthesis of Control Structures by Singular Value Analysis - Dynamic Measures of Sensitivity and Interaction.* AIChE J; 1985. **31**(3): p. 427-439.

33. Luyben, W.L., *Steady-State Energy Conservation Aspects of Distillation Column Control system Design.* Ind Eng Chem. Fund; 1975. **14**(4): p. 321-325.

34. Luyben, W.L., *The Concept of "Eigenstructure" in Process Control.* Ind Eng Chem Res; 1988. **27**: p. 206-208.

35. MacGregor, J.F., *On-Line Statistical Process Control.* CEP 1988: p. 21-31.

36. MacGregor, J.M., *et al. Multivariate Statistical Methods in Process Analysis and Control.* in *CPC-IV.* 1991. Souther Padre Island, TX:

37. Marino-Galarraga, M., T.J. McAvoy, and T.E. Marlin, *Short-Cut Operability Analysis. 3. Short-Cut Methodology for the Assessment of Process Control Designs.* Ind Eng Chem Res; 1987. **26**: p. 521-531.

38. McCabe, G.P., *Principal Variables.* Technometrics, 1984. **26**(2).

39. Milton, J.S. and J.C. Arnold, *Introduction to Probability and Statistics.* Second ed. 1990, New York: McGraw-Hill.

40. Moore, C.F., J.E. Hackney, and D.L. Canter. *Selecting Sensor Location and Type for Multivariable Processes.* in *Shell Process Control Workshop.* 1986. Houston, TX.

41. Moore, B.C. *Systematic Attention to Detail by Producation Organizations for Sustained Improvement.* in *Second National Symposium on Statistical Process Control.* 1987. Tempe, AZ.

42. Moore, C.F. *Control Processes in the Continuous (Non-Discrete) Manufacturing Industries.* in *Second National Symposium on Statistical Process Control.* 1987. Tempe, AZ.

43. Moore, C.F. *What and Who is in Control? A Process Control Perspective on Statistical Process Control.* in *The Shell Process Control Workshop.* 1988. Houston, TX.

44. Morari, M., Y. Arkun, and G. Stephanopoulous, *Studies in the Synthesis of Control Structures for Chemical Processes, Parts I, II, and III.* AIChE J; 1980. **26**(2).

45. Naes, T., C. Irgens, and H. Martens, *Comparison of Linear Statistical Methods for Calibration of NIR Instruments.* Appl Statist; 1986. **35**(2): p. 195-206.

46. Niederlinski, A., *A Heuristic Approach to the Design of Linear Multivariable Interacting Control Systems.* Automatica; 1971. **7**: p. 691-701.

47. Page, E.S., *Continuous Inspection Schemes.* Biometrika; 1954. **41**: p. 100-114.

48. Papadourakis, A., M.F. Doherty, and J.M. Douglas, *Relative Gain Array for Units in Plants with Recycle.* Ind Eng Chem Res; 1987. (26).

49. Papastathopoulou, H.S. and W.L. Luyben, *A New Method for the Derivation of Steady-State Gains for Multivariable Processes.* Ind Eng Chem Res; 1990. **29**(3): p. 366-369.

50. Rhinehart, R.R. *A Self Tuning Filter and Process Change Identifier for Continuous Variables.* in *Advances in Instrumentation and Control.* 1990.

51. Rhinehart, R.R., *Method for Automatic Adaptation of the Time Constant for a First-Order Filter.* Ind Eng Chem Res; 1991.

52. Rhinehart, R.R., *A Statistically Based Filter.* Ind Eng Chem Res; 1991

53. Roberts, S.W., Technometrics; 1959. **1**: p. 239.

54. Shewhart, W.A., *Economic Control of Quality.* 1931, Van Nostrand.

55. Skogestad, S. and M. Morari, *Effect of Disturbance Directions on Closed-Loop Performance.* Ind Eng Chem Res; 1987. **26**: p. 2029-2035.

56. Stanley, G., M. Marino-Galarraga, and T.J. McAvoy, *Shortcut Operability Analysis. 1. The Relative Disturbance Gain.* Ind Eng Chem Process Des Dev; 1985. **24**: p. 1181-1188.

57. Stephanopoulos, G., *Synthesis of Control Systems for Chemical PLants - A Challenge for Creativity.* Comp and Chem Eng; 1983. **7**(4): p. 331-365.

58. Stephens, G.L. *Practical SPC -- On-line Process Operations Tools.* in *American Institute of Chemical Engineers Annual Meeting.* 1990. Chicago, IL.

59. Stone, M. and R.J. Brooks, *Continuum Regression: Cross-validated Sequentially Constructed Prediction Embracing Ordinary Least Squares, Partial Least Squares and Principal Component Regression.* J. R. Statist Soc B; 1990. **52**(2): p. 237-269.

60. Tatsuoka, M.M., *Multivariate Analysis.* Second ed. 1988, New York: McMillan Publishing Company.

61. Tolliver, T.L. and L.C. McCune, *Distillation Control Based on Steady-state Simulation.* ISA Trans; 1978. **17**(3): p. 3-10.

62. Umeda, T., T. Kuriyama, and A. Ichikawa. *IFAC Congress.* 1978.

63. Waller, K.V., *et al.*, *An Experimental Comparison of Four Control Sturctures for Two-Point Control of Distillation.* Ind Eng Chem Res; 1988. **27**: p. 624-630.

64. Waller, K.V., *et al.*, *Disturbance Sensitivity of Distillation Control Structures.* AIChE J; 1988. **34**(5): p. 853-858.

65. Williams, V.J., *Application of Steady-state Analysis Tools in Plant-wide Process Control System Design and Analysis*, University of Tennessee-Knoxville, 1990.

APPENDIX

Mole fraction J - Fresh Feed

Variable: YAFEED

Moments

N	959	Sum Wgts	959
Mean	0.901313	Sum	864.3589
Std Dev	0.006114	Variance	0.000037
Skewness	0.265939	Kurtosis	1.03382
USS	779.0934	CSS	0.035811
CV	0.678348	Std Mean	0.000197
T:Mean=0	4565.17	Pr>|T|	0.0001
Num ^= 0	959	Num > 0	959
M(Sign)	479.5	Pr>=|M|	0.0001
Sgn Rank	230160	Pr>=|S|	0.0001
W:Normal	0.940375	Pr<W	0.0001

Quantiles(Def=5)

100% Max	0.91899	99%	0.91899
75% Q3	0.90466	95%	0.91143
50% Med	0.90193	90%	0.90641
25% Q1	0.89847	10%	0.89384
0% Min	0.88818	5%	0.88917
		1%	0.88818
Range	0.03081		
Q3-Q1	0.00619		
Mode	0.88818		

Extremes

Lowest	Obs	Highest	Obs
0.88818(	841)	0.91899(	27)
0.88818(	840)	0.91899(	28)
0.88818(	839)	0.91899(	29)
0.88818(	838)	0.91899(	30)
0.88818(	837)	0.91899(	31)

Histogram

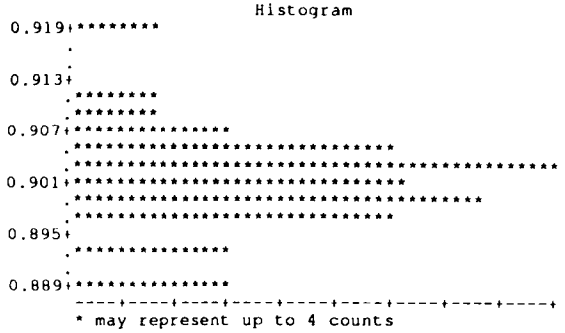

Boxplot

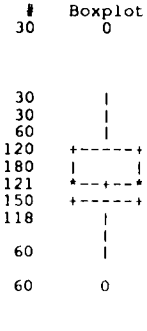

Normal Probability Plot

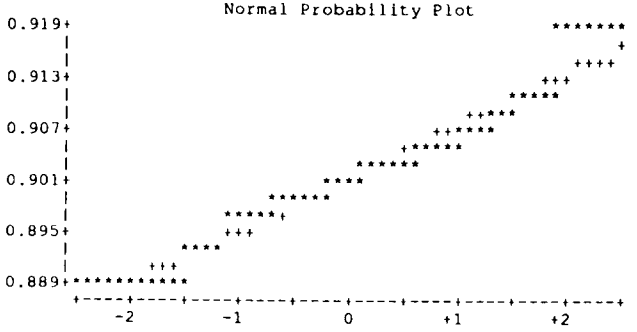

Mole fraction J - Bottoms

Variable=YAB

Moments

N	959	Sum Wgts	959
Mean	0.010697	Sum	10.2583
Std Dev	0.000602	Variance	3.629E-7
Skewness	1.335394	Kurtosis	2.180428
USS	0.110079	CSS	0.000348
CV	5.631336	Std Mean	0.000019
T:Mean=0	549.918	Pr>|T|	0.0001
Num ^= 0	959	Num > 0	959
M(Sign)	479.5	Pr>=|M|	0.0001
Sgn Rank	230160	Pr>=|S|	0.0001
W:Normal	0.875992	Pr<W	0.0001

Quantiles(Def=5)

100% Max	0.012704	99%	0.012666
75% Q3	0.010956	95%	0.012145
50% Med	0.010542	90%	0.011413
25% Q1	0.01033	10%	0.010116
0% Min	0.009599	5%	0.009963
		1%	0.009619
Range	0.003104		
Q3-Q1	0.000626		
Mode	0.010067		

Extremes

Lowest	Obs	Highest	Obs
0.009599(	854)	0.012694(	66)
0.0096(	855)	0.012699(	70)
0.009601(	853)	0.012701(	67)
0.009602(	856)	0.012703(	69)
0.009604(	852)	0.012704(	68)

Histogram

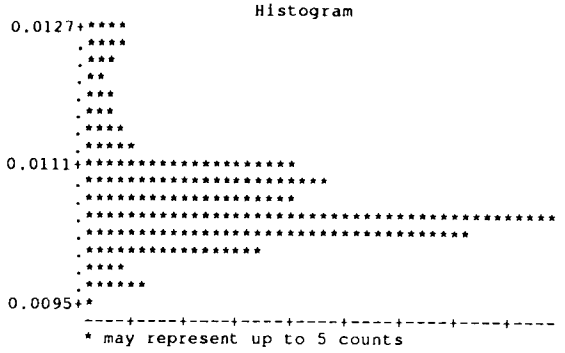

#	Boxplot
17	0
16	0
12	0
10	0
11	0
13	|
18	|
23	|
98	|
111	+-----+
98	| + |
220	*-----*
178	+-----+
83	|
19	|
30	|
2	|

Normal Probability Plot

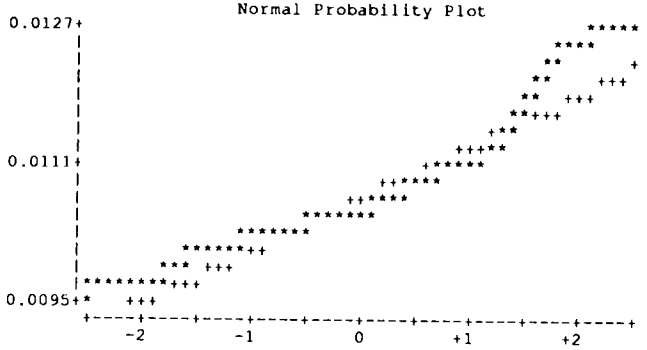

Mole fraction J - Distillate

Variable YAD

Moments

N	959	Sum Wgts	959
Mean	0.950307	Sum	911.3445
Std Dev	0.001508	Variance	2.274E-6
Skewness	0.958763	Kurtosis	1.198517
USS	866.0592	CSS	0.002178
CV	0.158675	Std Mean	0.000049
T:Mean=0	19516.4	Pr>|T|	0.0001
Num ^= 0	959	Num > 0	959
M(Sign)	479.5	Pr>=|M|	0.0001
Sgn Rank	230160	Pr>=|S|	0.0001
W:Normal	0.912752	Pr<W	0.0001

Quantiles(Def=5)

100% Max	0.95482	99%	0.95475
75% Q3	0.95106	95%	0.95379
50% Med	0.94996	90%	0.9523
25% Q1	0.94937	10%	0.94882
0% Min	0.94725	5%	0.94824
		1%	0.9473
Range	0.00757		
Q3-Q1	0.00169		
Mode	0.95074		

Extremes

Lowest	Obs	Highest	Obs
0.94725(	858)	0.95481(	68)
0.94725(	857)	0.95481(	72)
0.94726(	859)	0.95482(	69)
0.94726(	856)	0.95482(	70)
0.94726(	855)	0.95482(	71)

Histogram

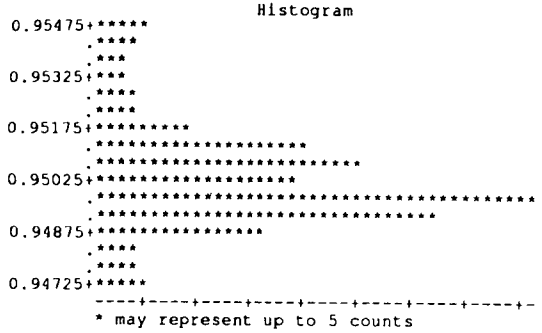

#
23
18
14
15
18
18
44
100
124
94
204
156
76
16
18
21

Boxplot

Normal Probability Plot

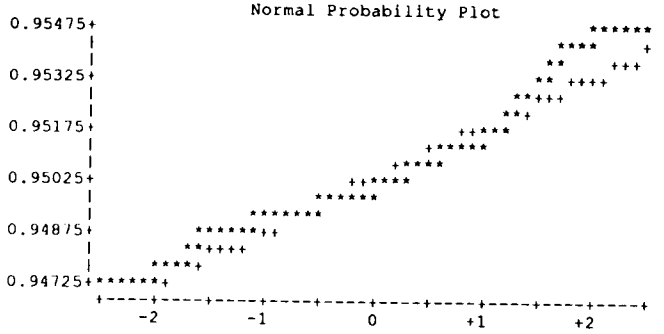

Changes in Column Feed Rate

Variable: COLFEED

Moments

N	959	Sum Wgts	959
Mean	0.000313	Sum	0.299989
Std Dev	0.022419	Variance	0.000503
Skewness	0.988438	Kurtosis	1.713135
USS	0.481604	CSS	0.48151
CV	7166.932	Std Mean	0.000724
T:Mean=0	0.432092	Pr>|T|	0.6658
Num ^= 0	724	Num > 0	343
M(Sign)	-19	Pr>=|M|	0.1691
Sqn Rank	-10602	Pr>=|S|	0.0583
W:Normal	0.899829	Pr<W	0.0001

Quantiles(Def=5)

100% Max	0.080017	99%	0.070007
75% Q3	0.01001	95%	0.049988
50% Med	0	90%	0.02002
25% Q1	-0.01001	10%	-0.03
0% Min	-0.04001	5%	-0.03
		1%	-0.04001
Range	0.120026		
Q3-Q1	0.02002		
Mode	0		

Extremes

Lowest	Obs	Highest	Obs
-0.04001(	850)	0.070007(	61)
-0.04001(	846)	0.070007(	63)
-0.04001(	844)	0.070007(	64)
-0.04001(	843)	0.070007(	65)
-0.04001(	839)	0.080017(	53)

Histogram

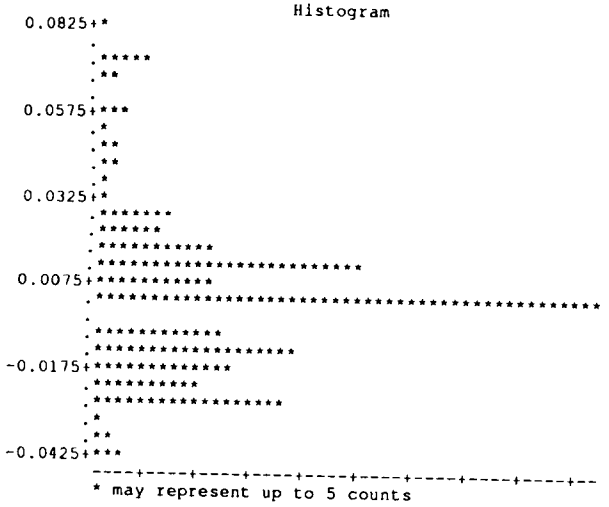

Boxplot

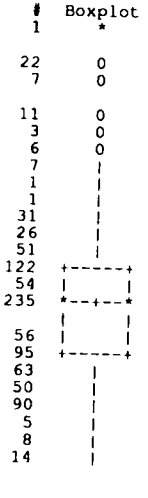

Normal Probability Plot

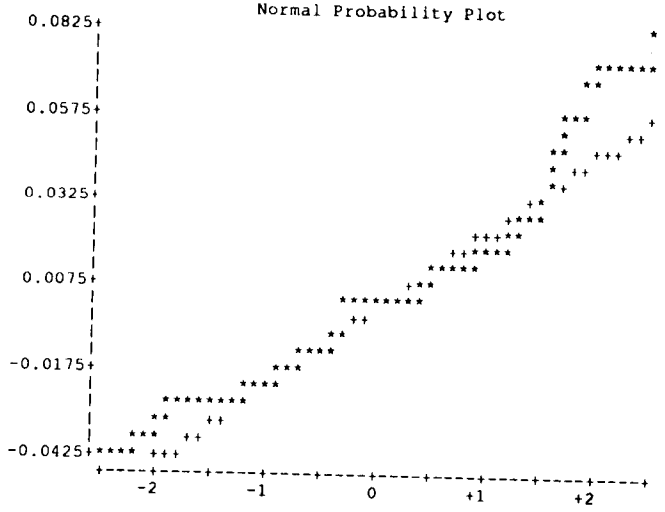

Changes in Reflux Rate

Variable-REFLUX

Moments

N	959	Sum Wgts	959
Mean	0.000678	Sum	0.649994
Std Dev	0.022465	Variance	0.000505
Skewness	-0.39698	Kurtosis	0.159792
USS	0.4839	CSS	0.48346
CV	3314.413	Std Mean	0.000725
T:Mean=0	0.934335	Pr>|T|	0.3504
Num ^= 0	758	Num > 0	391
M(Sign)	12	Pr>=|M|	0.4035
Sgn Rank	13898	Pr>=|S|	0.0206
W:Normal	0.949191	Pr<W	0.0001

Quantiles(Def=5)

100% Max	0.050003	99%	0.049988
75% Q3	0.019989	95%	0.039993
50% Med	0	90%	0.029999
25% Q1	-0.01001	10%	-0.03
0% Min	-0.07001	5%	-0.04001
		1%	-0.06
Range	0.12001		
Q3-Q1	0.029999		
Mode	0		

Extremes

Lowest	Obs	Highest	Obs
-0.07001(	105)	0.050003(	173)
-0.06001(	100)	0.050003(	176)
-0.06(	112)	0.050003(	179)
-0.06(	110)	0.050003(	181)
-0.06(	109)	0.050003(	185)

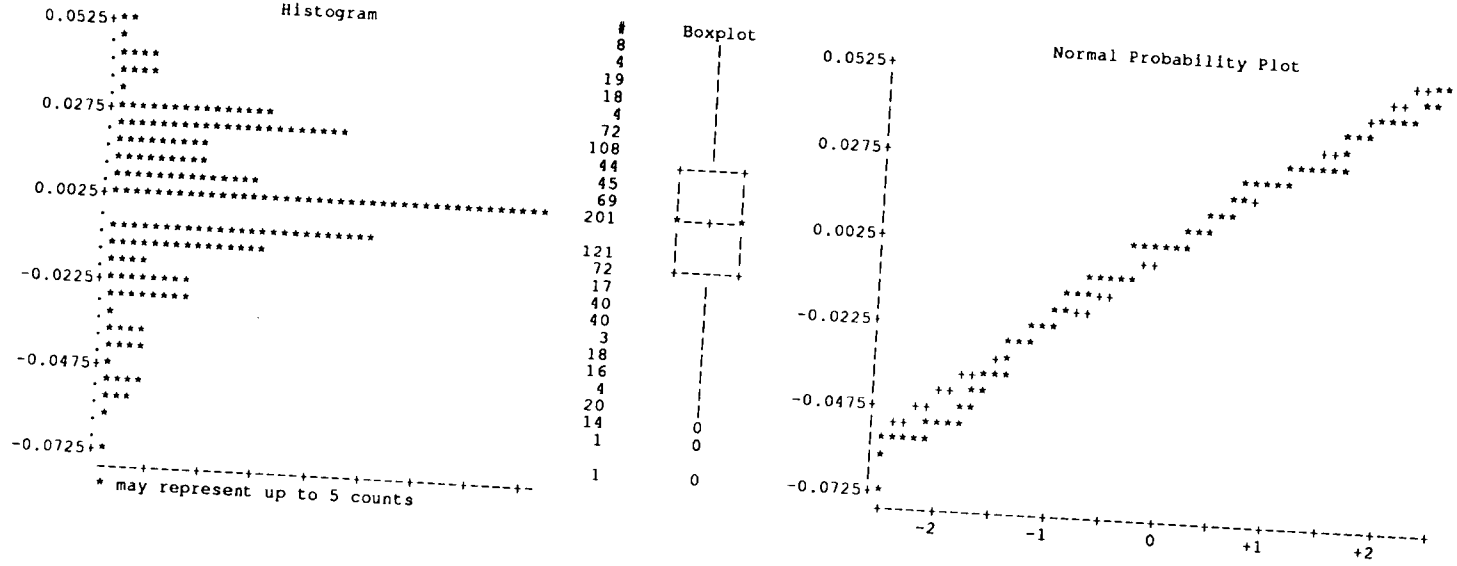

VITA

Vera Jo Williams was born in Lexington, Kentucky on April 4, 1966. She attended Scott County High School in Georgetown, Kentucky, graduating in May 1983. The following August she entered the University of Kentucky and in May 1987 she received a Bachelor of Science degree in Chemical Engineering. She entered graduated school at the University of Tennessee, Knoxville in September 1987, studying toward a Master of Science degree in Chemical Engineering. The degree was award in May 1990. She continued her graduated studies in Chemical Engineering at the University of Tennessee, Knoxville, and received a Doctor of Philosophy degree in May 1993.

The author is a member of the American Institute of Chemical Engineerings, Phi Kappa Phi, Tau Beta Pi, and Omega Chi Epsilon. Upon completion of this degree, she will be employed by Eastman Chemical Company in Kingsport, Tennessee.