University of Tennessee, Knoxville
Trace: Tennessee Research and Creative Exchange

Home Garden, Lawn, and Landscape | UT Extension Publications

4-21-2010

PB1576 Selecting Fescues

The University of Tennessee Agricultural Extension Service

Follow this and additional works at: http://trace.tennessee.edu/utk_agexgard

Part of the Plant Sciences Commons

Recommended Citation
"PB1576 Selecting Fescues," The University of Tennessee Agricultural Extension Service, , http://trace.tennessee.edu/utk_agexgard/88

The publications in this collection represent the historical publishing record of the UT Agricultural Experiment Station and do not necessarily reflect current scientific knowledge or recommendations. Current information about UT Ag Research can be found at the UT Ag Research website.
This Lawn Management - Planting is brought to you for free and open access by the UT Extension Publications at Trace: Tennessee Research and Creative Exchange. It has been accepted for inclusion in Home Garden, Lawn, and Landscape by an authorized administrator of Trace: Tennessee Research and Creative Exchange. For more information, please contact trace@utk.edu.

UT Extension

PB1576

Lawn Care

Selecting, Establishing & Maintaining the

Fescues

THE UNIVERSITY of TENNESSEE UT

INSTITUTE of AGRICULTURE

Table of Contents

Selection 3

Tall Fescue 3
Fine Fescues 4
Chewings Fescue 4
Hard Fescue 4
Red Fescue 4
Climatic Adaptation 5

Establishment 5

Seeding 6
Sodding 6
Care After Planting 7

Maintenance 7

Primary Maintenance Practices 7
Mowing 7
Fertilization 8
Nitrogen 8
Phosphorus 8
Potassium 9
Selecting a Fertilizer 9
Fescue Fertilization Calendar 10
Liming 10
Irrigation 10
Secondary Maintenance Practices 11
Thatch and Its Development 11
Thatch Removal 11
Aeration 12
Coring 12
Slicing and Spiking 12
Pests of Fescues 13
Diseases 13
Insects 13
Weeds 13

Renovation 14

Fescue(s) Management Calendar 15

Selecting, Establishing and Maintaining the Fescues

Tom Samples, Associate Professor
Ornamental Horticulture and Landscape Design

Selection

Four fescue species are maintained as lawngrasses in Tennessee. Originally from Europe, these perennial, cool-season lawngrasses are an integral part of many Tennessee landscapes. They grow best in deep, well-drained soils at air temperatures from 60 to 75 F. High temperatures and drought often slow their rate of growth during late spring and summer. Species and varieties may vary in color, leaf texture, stand density, disease resistance and tolerance of shade, high temperature and drought. Tall fescue (*Festuca arundinacea*) is adapted to a wide range of soil and climatic conditions. This medium- to coarse-textured lawngrass tolerates high temperatures, drought and wear. Tall fescue is usually best adapted in areas of the lawn receiving full sun or in light, open shade (Table 1). Turfgrass breeders continue to search for dark green, dense and disease-resistant tall fescue varieties. Chewings (*F. rubra* ssp. *commutata*), hard (*F. longifolia*) and red (*F. rubra*) fescues are known collectively as fine fescues because of their narrow leaf blades. Seeds of several fine fescue species are often mixed and marketed for use in shade. Although they have excellent shade tolerance and good drought tolerance, the fine fescues are not particularly tolerant of high temperatures. Tall and fine fescues establish from seed faster than Kentucky bluegrass. They are also more tolerant of acid soil conditions, shade and drought.

Tall Fescue

Although tall fescue has short below-ground stems (rhizomes), most new leaves and tillers originate from the crown and not from nodes on rhizomes. As a result, this lawngrass has very weak sod-forming characteristics and a bunch-type growth habit (Table 2). It may be necessary to broadcast seed over the lawn or slit-seed the lawn every two to three years to maintain a uniform, dense and weed-resistant turf. Tall fescue is best adapted to fertile, moist soils but tolerates wet soils of low fertility.

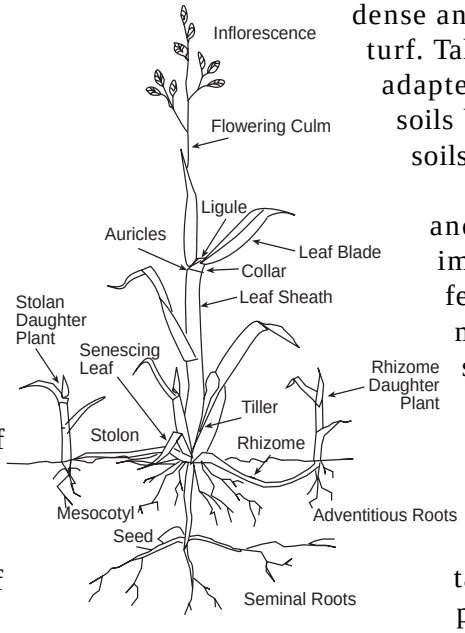

Figure 1. A lawngrass plant.

Leaf blades are flat and rigid. Seed of many improved, turf-type tall fescue varieties is marketed in Tennessee. Several of these varieties are higher in overall lawngrass quality and more disease resistant than 'Kentucky 31' tall fescue. For more precise information concerning tall fescue varieties, please contact your county Agricultural Extension office.

Table 1. Drought, High Temperature, Shade, Soil Acidity and Wear Tolerances of Several Fescues.

Tolerance	Tall	Chewings	Hard	Red
Drought	good	good	good	good
High temperature	good	fair	fair	fair
Shade	intermediate	excellent	excellent	excellent
Soil acidity	excellent	good	good	good
Wear	medium	medium	medium	medium

Fine Fescues:

Chewings Fescue

Chewings fescue forms a very dense, fine-textured and upright lawn. Leaf blades of chewings fescue are thin, bristle-like and stiff. This non-creeping, bunch-type lawngrass is well-adapted to acidic, infertile soils. Chewings fescue does not usually tolerate wet, fertile soils or the high and low temperature extremes associated with sites exposed to full sun.

Hard Fescue

Hard fescue is a bunch-type lawngrass with tough, bluish-green leaves and an extensive root system. Hard fescue forms a dense, somewhat tufted, low maintenance and low quality lawn. Although hard fescue has limited high temperature tolerance, it is sometimes used alone or in grass and grass-legume mixtures for erosion control on ditch banks and along roadsides.

Red Fescue

Often referred to as creeping red fescue, this lawngrass is similar in appearance to chewings fescue with one important exception — it has a creeping growth habit. Two distinct types of red fescue are *F. rubra* ssp. *rubra*, a relatively strong, sod-forming type and *F. rubra* ssp. *trichophylla*, with short, slender rhizomes. Leaf blades are thin, bristle-like and deeply ridged above. Red fescue forms a very dense, fine-textured lawn. The rate of vertical growth of red fescue is slow compared to most cool-season lawngrasses. The overall quality of a red fescue lawn often declines rapidly if an excessive rate of nitrogen is applied. Red fescue is usually adapted to soil and climatic conditions favorable to chewings fescue.

Table 2. Comparative Chart, Tall and Fine Fescues.

Characteristic	Tall	Chewings	Hard	Red
Leaf texture	medium - coarse	fine	fine	fine
Growth habit	bunch	bunch	bunch	sod-forming
Level of care	medium	low	low	low
Method of establishment	seed/sod	seed/sod	seed/sod	seed/sod plugs
Establishment vigor (from seed)	good	good	good	good
Density of aerial shoots	medium-low	high	high	high

Climatic Adaptation

Tennessee is located within a transitional zone between temperate and subtropical climates. Fescues maintained in this transition zone often experience high temperature and drought stresses during extended hot, dry periods in summer.

Tennessee can be divided into four climatic zones which favor the growth and persistence of certain lawngrasses[1]. Generally, the fescues are not well adapted in warm humid Zone IV. Similarly, the moderately warm-to-cool humid climatic conditions in Zone III usually favor warm season (optimum growth between 80 to 95 F) lawngrasses including bermudagrass and *Zoysia*. The fescues are generally adapted in cool-to-warm humid Zone II and cool humid Zone I.

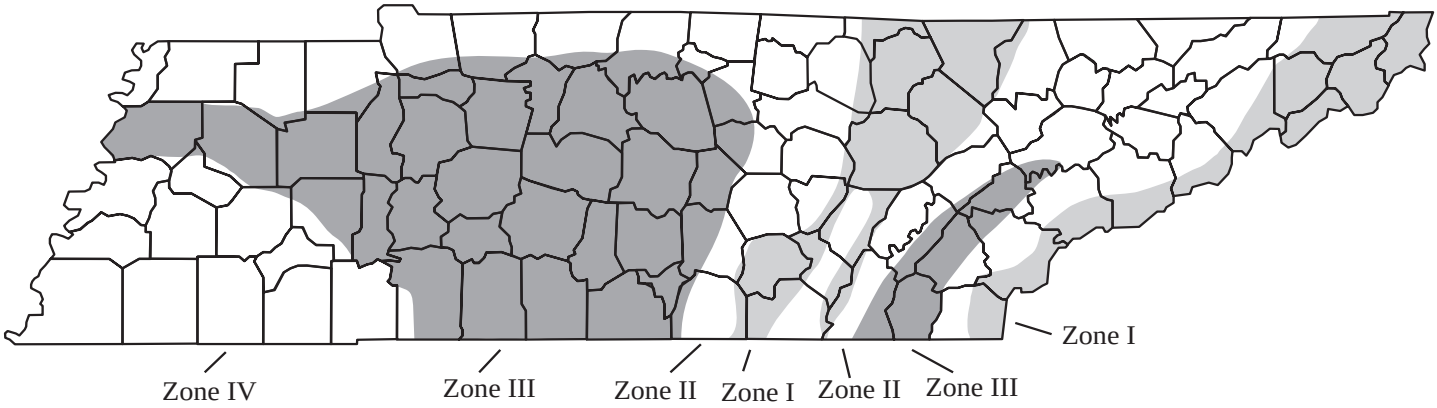

Figure 2. Four lawngrass climatic zones in Tennessee.[1]

Establishment

Fescue lawns are commonly established from seed or by transplanting sod. The preparation of a firm planting bed with appropriate fertility is critically important to the growth and performance of young seedlings or newly-transplanted fescue plants. For best results:

1. Test soils six to eight weeks before the intended planting date to determine soil phosphorus, potassium and pH levels.

2. Stockpile existing topsoil from new construction sites before excavation and construction begins.

3. Control [i.e. Roundup® application(s) according to instructions on the product label] troublesome perennial weed grasses and broadleaf weeds.

4. Remove all debris (i.e. wood, pipe, rock, discarded cement, brush and construction scrap) that may obstruct the growth of fescue roots and restrict soil water movement.

5. Establish a rough grade which directs water away from the house.

6. Install subsurface drainage and irrigation systems before final grading and smoothing.

7. Redistribute the topsoil. Topsoil should be free of troublesome weeds, including johnsongrass, thistle, etc., and should contain no stones, roots, trash or extraneous materials larger than 1 1/2 inches in diameter. If suitable topsoil is not available on site, the existing soil may be modified. Soil aeration and water drainage can be improved when proper amounts of coarse sand or loamy topsoil are incorporated into clay soils. Mix 4 to 6 inches of sand or topsoil with the upper 2 to 4 inches of underlying soil. If topsoil lacks organic matter, additives such as mature compost, well-rotted sawdust or decomposed manure may be mixed (10 to 15 percent by volume) with soil. Determine pH, phosphorus and potassium levels in the soil by sampling after mixing sand, topsoil or organic materials.

[1] From:
Callahan, L.M. 1971. Turfgrass for golf courses in Tennessee. Prof. Golfers Assoc. Yearbook-Tennessee Section; Feb.

8. Uniformly apply nitrogen, phosphorus, potassium and lime according to soil test recommendations. A general guideline for fertilizing a planting bed in lieu of a soil test is to apply 25 pounds of 6-12-12 (N-P_2O_5-K_2O) fertilizer or equivalent per 1,000 square feet.

9. Till the soil to a depth of 6 or more inches, thoroughly mixing lime and fertilizer with soil.

10. Fine grade to smooth the soil surface before planting. Hand raking is preferred for small areas. A heavy steel drag mat, plank drag or tiller rake is effective on larger areas.

11. If the soil is dry, water the planting bed to a depth of 5 or 6 inches several days before planting.

12. Allow at least one week for settling of the soil before planting. The planting bed should be firm enough to walk in, with the upper 1/2 inch of soil loosened. If footprints are deeper than 1 inch, rolling or further watering is recommended.

Seeding

Seed the fescues in late summer (i.e. August 20 to September 15) just before most favorable climatic conditions. Cool temperatures and moist soils during late summer, fall and early spring promote plant growth. Fescues may also be seeded in early spring; however, spring plantings often result in greater susceptibility to heat and drought stresses. Young fescue plants with limited root systems often do not survive the summer heat and dry conditions.

The recommended planting rate for establishing a tall fescue lawn from seed is from 5 to 8 pounds per 1,000 sq. ft. Plant chewings, hard or red fescues at a rate of 3 to 5 pounds of seed per 1,000 sq. ft. For best results, purchase high quality seed. Tall fescue seed germination should be at least 85 percent; seed purity, 95 percent. The minimum acceptable seed germination and purity of the fine fescues is 80 percent and 95 percent, respectively. For more information regarding seed and the seed label, please refer to Extension **PB1350, Turfgrass Seed**.

Straw is an effective mulch when uniformly broadcast over a seedbed after planting. Eighty to 100 pounds of clean (relatively free of weed seeds) mulching straw per 1,000 square feet usually protects the newly seeded lawn from seed washing and erosion. Straw also conserves moisture and buffers emerging fescue seedlings from temperature extremes. Spread the straw as evenly as possible to prevent layering, which can limit the amount of light reaching the young fescue plants.

Sodding

When high-quality fescue sod is properly transplanted, it stabilizes soils and provides “instant” beautification. Although sodding in September, October and March is preferred, fescue sod may be transplanted almost any time of the year. Harvesting, installing and caring for fescue sod in mid-summer is especially challenging due, in part, to the potential damage from high temperatures, drought and disease activity. Several weeks or months may be required before the newly-installed fescues root into the soil below and are capable of withstanding foot traffic. Fescue sod produced and marketed in Tennessee is often harvested in 16-inch by 24-inch pieces with 5/8 inch (plus or minus 1/4 inch) of soil. Biodegradable netting, which improves the tensile strength and speeds harvest of the fescue sod, may be located near the soil surface. One pallet containing about 50 square yards of fescue sod may weigh more than 2,000 pounds.

Transplant the first pieces of sod in a straight line along a driveway or sidewalk. Work should progress toward the center of the lawn. Place the pieces of sod in a pattern similar to bricks in a wall. This will minimize the formation of long, straight lines and reduce the risk of dehydration of plants located near the edges. Although they should fit together tightly, sod pieces should not be stretched or overlapped.

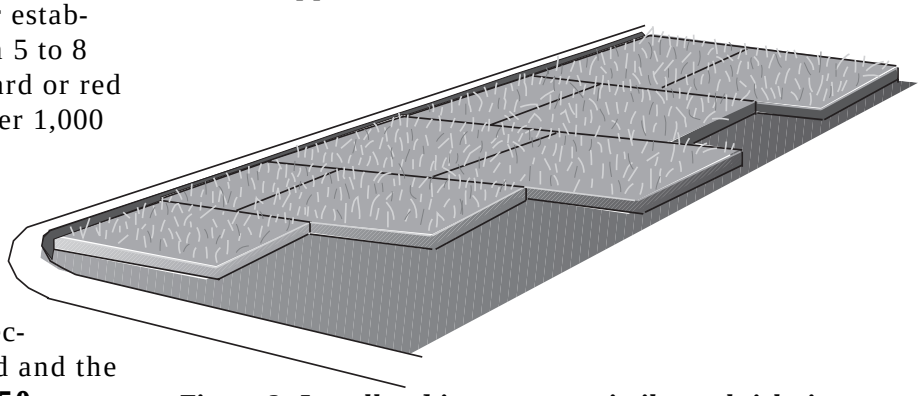

Figure 3. Install sod in a pattern similar to bricks in a wall.

Care After Planting

Begin irrigating the newly planted lawn area immediately after seeding or sodding. Water frequently (i.e. several times each day) to maintain adequate moisture in the upper 1 to 2 inches of soil. Apply water slowly to prevent seed movement and runoff. After seedlings are well developed (i.e. 2-inch height) or the sod is well rooted, discontinue the practice of light, daily irrigations. Apply more water less often to encourage deep rooting.

Mow the lawn when the tallest plants reach a height about 1 1/3 times the intended cutting height. For example, if the cutting height is 2 inches, mow the lawn when the tallest plants reach a height of 2 2/3 inches. Short grass clippings may be returned to the soil surface to provide nutrients and contribute organic matter to the soil. Keep mower blades sharp. Fescue seedlings may be easily torn or lifted from the soil by a dull mower blade.

Maintenance

Primary Maintenance Practices

Mowing, fertilization and irrigation are very important considerations when developing an effective lawn care plan. For example, fescues perform best when they are mowed often at an appropriate cutting height. Fertilizer applications can be timed to support active plant growth during favorable weather conditions. The lawn can be watered to maintain active growth and to preserve the root system of fescues during extended periods of drought.

Mowing

For best results, keep the mower blade(s) sharp and mow when the lawn is dry. Set the cutting height of the mower within the optimum range for the fescue being maintained. The optimum cutting height range for tall fescue varieties is usually from 2 to 3 inches; the fine fescues, from 1 1/2 to 2 1/2 inches. To determine the mechanically set cutting height (bench setting), place the mower on a firm, level surface and measure the distance from the surface to the cutting edge of the blade(s). The effective cutting height is the actual height of aerial shoots immediately after mowing. The effective cutting height may be slightly higher than the bench setting when the soil is firm and the mower wheels ride on lawngrass shoots above the soil surface. If the soil is soft or moist, the effective cutting height may be equal to or lower than the bench setting.

Raising the height of cut within the optimum cutting height range before extended periods of drought or high and low temperature stresses can be very beneficial. Increasing the cutting height may promote deep rooting. The additional vegetation may also insulate the soil against high and low temperature extremes.

Remove no more than one-third of the leaf tissue when mowing. Scalping lawngrass plants back to their original height results in a weak and weedy lawn. If the lawn grows too tall between mowings, gradually lower the cutting height over a period of two or three mowings. Mowing patterns result from back-and-forth travel while mowing the lawn. Try to alternate the mowing direction each time the lawn is mowed to distribute wear and soil compaction. This may also encourage the fescues to grow upright.

Return small grass clippings to the lawn when mowing. Small pieces of leaf tissue decompose naturally, recycling essential nutrients. New mulching mowers and mower accessories are available to help evenly spread small clippings over the lawn. Conventional side- or rear-discharge mowers may also be used to cycle clippings if the lawn is dry and no more than one-third of the aerial portion of the plants is removed when mowing. For more information regarding clipping cycling, please refer to Extension **PB1455, Lawn Care to Reduce Landscape Waste.**

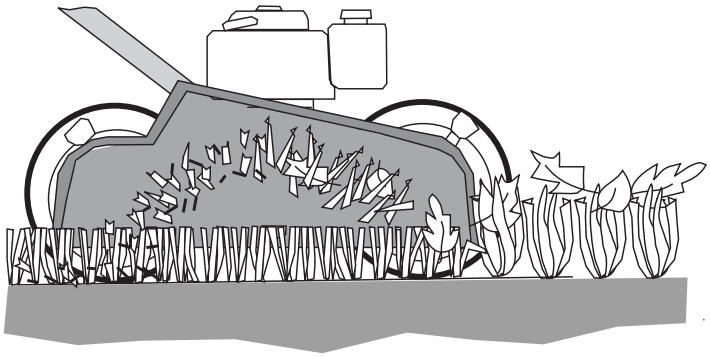

Figure 4. New mulching mowers and mower accessories are available from some manufacturers to help evenly spread small clippings over the lawn.

Fertilization

Air and water supply the fescues with carbon, hydrogen and oxygen. The soil provides 13

essential mineral nutrients. In Tennessee, soils usually contain adequate amounts of secondary nutrients (calcium, magnesium and sulfur) and micronutrients (iron, manganese, zinc, copper, molybdenum, boron and chlorine). They seldom contain enough nitrogen to meet the needs of fescues. Sometimes, additional phosphorus and potassium may also be required. A fertilization program seldom delivers the desired results if the soil pH is not within the optimum range for plant growth. Only a soil test can provide an objective assessment of the need for fertilization and liming, and the appropriate amounts of materials to apply. For more information regarding collecting and processing a soil sample, please refer to Extension **PB1061, Soil Testing**.

Nitrogen

The nutrient required by fescues in greatest amounts is nitrogen. Nitrogen is mobile in the soil and is the nutrient most likely to be deficient in fescues. Fescue lawns deficient in nitrogen appear yellowish to light green, are often thin and grow very slowly. The application of too much nitrogen often results in rapid growth and reduces the lawn's tolerance of high and low temperature extremes, traffic and drought. The monthly nitrogen requirement varies among the fescues. Tall fescues require a medium level of nitrogen fertility (from 2/5 to 1 pound of nitrogen per 1,000 square feet per growing month) compared to the high level of nitrogen fertility most often required by Kentucky bluegrass (from 1/2 to 1 1/2 pounds of nitrogen per 1,000 square feet per growing month). Red and chewings fescues usually require from 1/5 to 3/5 pound of nitrogen per 1,000 square feet per growing month.

Some nitrogen sources may be very soluble in water and may release nitrogen for plant uptake very quickly (Table 3). Others may be relatively insoluble in water and release nitrogen slowly, over an extended period of time. No more than 1 pound of quickly available nitrogen should be applied per 1,000 square feet of lawn surface at one time. Ammonium nitrate [34-0-0, containing 34 percent nitrogen (N)] and urea (46-0-0, containing 46 percent N) are examples of quickly available nitrogen sources. Isobutylidene diurea (31-0-0, containing 31 percent N), sulfur-coated urea (32-0-0, containing 32 percent N), milorganite [6-2-0, containing 6 percent N and 2 percent available phosphate (P_2O_5)] and ureaformaldehyde (38-0-0, containing 38 percent N) are sources of slowly available nitrogen.

Phosphorus

Both mature fescue plants and developing seedlings need phosphorus. Plants deficient in phosphorus may have red to reddish-purple leaves, and may grow slowly, due to low energy levels. Fescues growing in soils testing low in phosphorus should receive more phosphorus each year than those maintained on soils testing medium or high. Concentrated superphosphate (0-46-0, containing 46 percent P_2O_5) and diammonium phosphate (18-46-0, containing 18 percent N and 46 percent P_2O_5) are common sources of phosphorus.

Table 3. Comparison of Nitrogen Sources.

Characteristic	Quick-Release	Slow-Release
Response Time	Fast	Extended
Danger of Foliar Burn	Medium to High	Low
Residual Nitrogen	Low to Medium	High
Potential to Leach	Moderate	Low
Cost per Pound of Nitrogen	Low to Moderate	Moderate to High
Frequency of Application	Frequently at Low Rate	Infrequently at Higher Rate

Potassium

Potassium is second only to nitrogen in the amount required by the fescues. Plants deficient in potassium generally lack vigor, tolerate fewer environmental stresses and are often disease-prone. Potassium chloride [0-0-60, containing 60 percent water-soluble potash (K_2O)], potassium nitrate (13-0-44, containing 13 percent N and 44 percent K_2O) and potassium sulfate (0-0-50, containing 50 percent K_2O) are three sources of potassium.

Selecting a Fertilizer

The label on a container of fertilizer expresses the grade or guaranteed analysis in the order N-P_2O_5-K_2O, where N is the percent total nitrogen, P_2O_5 is the percent available phosphate and K_2O is the percent water-soluble potash. It is a common practice to refer to the ratio of N-P_2O_5-K_2O. For example, a fertilizer material with a guaranteed analysis of 20-10-10 contains 20 percent N, 10 percent available P_2O_5 and 10 percent water-soluble K_2O and has a 2-1-1 (N-P_2O_5-K_2O) ratio. An application of 5 pounds of 20-10-10 fertilizer per 1,000 square feet supplies 1 pound of nitrogen, 1/2 pound of available phosphate and 1/2 pound of water soluble potash per 1,000 square feet.

Table 4. Fertilization Guideline for Maintaining Fescues Based on Soil Test Results.

Application Date	Nitrogen Application Rate (Pound of N per 1,000 Square Feet)	Ideal Fertilizer Ratio to Use When Soil Test Level of Available Phosphorus or Potassium is:	
		Low	Medium or High[a]
March 15	1/2	1-0-0	1-0-0
April 15	1/2	1-0-0	1-0-0
September 1	1[b]	2-1-1[c]	2-1-1[c]
October 15	1[b]	2-1-1[c]	1-0-0
November 15	1[b]	1-0-0	1-0-0
Total Yearly Application (per 1,000 Square Feet)	4 lbs. N	1 lb. P_2O_5 1 lb. K_2O	1/2 lb. P_2O_5 1/2 lb. K_2O

[a] When phosphorus or potassium tests in the very high range, further applications of the nutrient testing very high should be omitted. When both phosphorus and potassium test in the very high range, only nitrogen is needed.

[b] Tall fescues usually require from 2/5 to 1 pound of nitrogen per 1,000 square feet per growing month; red and chewings fescues, from 1/5 to 3/5 pound of nitrogen per 1,000 square feet per growing month. Within these ranges, more nitrogen is used at higher levels of lawn maintenance. A rate of 1/2 pound of nitrogen per 1,000 square feet applied in September, October and November is preferred in lawn areas where the fine fescues dominate.

[c] When clippings are removed from the lawn, apply twice the amount of K_2O recommended at each application date.

Fescue Fertilization Calendar

J	F	M	A	M	J	J	A	S	O	N	D
		x[a]	x					X[b]	X	X	

[a] x indicates the need to fertilize. The amount of quickly available nitrogen recommended at this time is 1/2 pound per 1,000 square feet, one-half less than that recommended when designated by an X.

[b] X indicates the need to fertilize. The amount of quickly available nitrogen recommended during the month is 1 pound per 1,000 square feet for tall fescue lawns. A rate of 1/2 pound of nitrogen per 1,000 square feet is preferred for the fine fescues.

For more information, please refer to Extension **PB1038, Lawn Fertilization and Management**.

Liming

Agricultural or ground limestone is available in either calcitic or dolomitic forms. It is used to increase the soil pH. Calcitic limestone contains mostly calcium carbonate and is a source of calcium. Dolomitic limestone contains both calcium and magnesium. Some companies market agricultural limestone that has been compressed into pellet form for ease of spreading.

Apply agricultural or pelletized-agricultural limestone based on soil test results. If the soil pH is above 6.0, an application of limestone is not recommended. For maintenance applications, do not broadcast more than 50 pounds of agricultural or pelletized-agricultural limestone per 1,000 square feet of lawn per application. For most uniform application, use a drop or gravity spreader. Pelletized-agricultural limestone can also be effectively spread with a centrifugal-type spreader. Do not mix and apply limestone with nitrogen-containing fertilizers. For more detailed information, please refer to Extension **PB1096, Liming Acid Soils in Tennessee**.

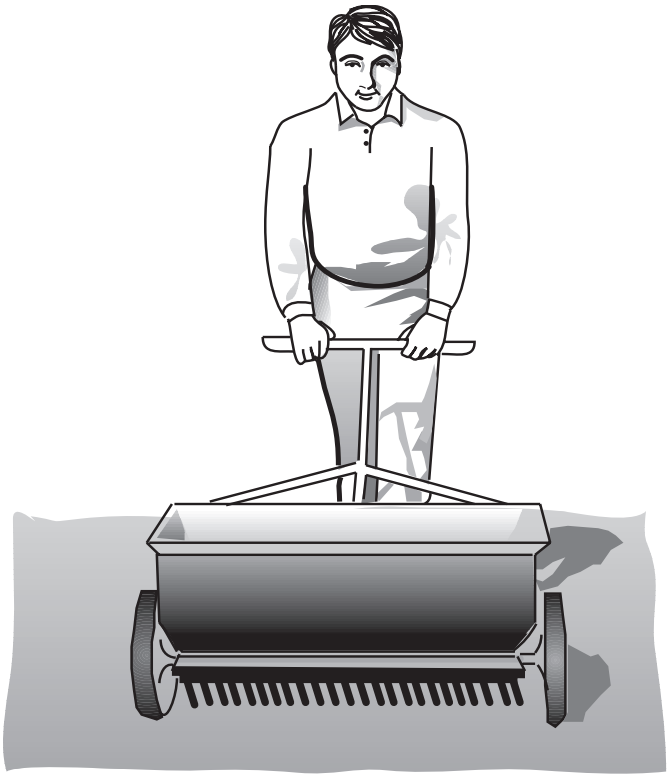

Figure 5. Use a drop or gravity spreader for most uniform application of agricultural and pelletized-agricultural limestone.

Irrigation

Actively growing fescues often contain 75 percent or more water by weight. In Tennessee, the total quantity and distribution of precipitation is usually less than ideal for maintaining a quality fescue lawn. Fescue lawns receiving no supplemental irrigation often experience severe drought stress some time during the growing season. Fine and tall fescues maintained in areas of the lawn shaded by trees may wilt quickly during extended hot, dry periods as they compete with tree roots for available water.

One indicator that a lawn is in need of water is footprinting. Fescues low in water do not bounce back quickly when walked on. If footprints remain in the lawn, or disappear very slowly, it is probably time to irrigate. Drought-stressed fescue lawns often

appear bluish-green and plants may have rolled leaves. Watering during morning hours (i.e. 5 a.m. to 11 a.m.) minimizes the time water droplets remain on leaves and the amount of water lost to evaporation.

A key to effective watering is to irrigate deeply, to a 4- to 6-inch soil depth, and infrequently. Actively growing fescues usually require from 1 to 1 1/2 inches (~630 to 945 gallons per 1,000 square feet) of water each week.

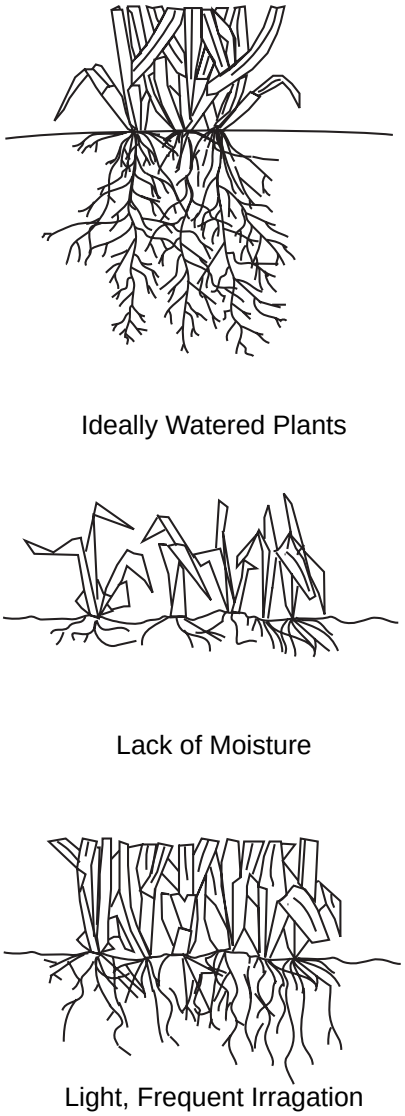

Figure 6. Frequent, light irrigations are most often detrimental to root development.

Secondary Maintenance Practices

Although mowing, fertilization and watering are of primary importance when caring for a fescue lawn, periodic dethatching and aeration may also be necessary.

Thatch and Its Development

Actively growing fescues constantly produce new plant parts, "sloughing off" old leaves, stems and roots. These old plant materials eventually decompose, forming humus. When the fescues are growing rapidly and the rate of accumulation of old plant materials exceeds the rate of decay, a thatch layer is formed. Excessive thatch causes several problems. The entwined layer of undecomposed and partially decomposed roots, stems, leaves and grass clippings may restrict the movement of water, air and nutrients into the soil. Thatch provides an excellent environment for insect pests and fungal pathogens. Young fescue plants rooted within the thatch layer are usually very susceptible to drought. Temperature fluctuations in the thatch layer are often more extreme than those in the soil below.

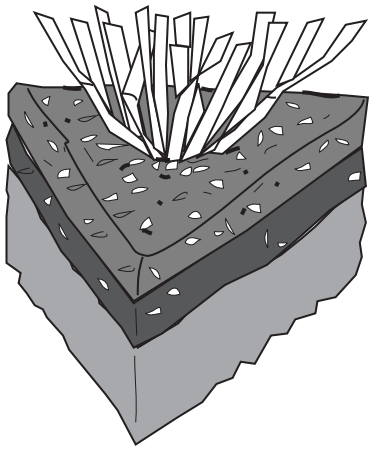

Figure 7. When plants are growing rapidly and the rate of accumulation of old plant materials exceeds the rate of decay, a thatch layer is formed.

Prolonged drought, scalping and excessive nitrogen fertilization favor an accumulation of thatch. When the fescues develop 1/2 inch of thatch, mechanical dethatching is recommended.

Although hand raking may help prevent the formation of a thatch layer, it is seldom vigorous enough to remove large amounts of thatch. Power rakes, vertical mowers and spring attachments for rotary mowers are engineered for thatch removal. Machines for mechanically removing thatch from the soil surface often have blades, knives or tines mounted on a reel which revolves on a plane vertical to the ground. They are most effective when set to penetrate the thatch layer, lightly striking the soil

below. A portion of the thatch is lifted and spread over the lawn surface. A lawn vacuum is very useful when removing the loosened organic material. Recovery of the fescues after dethatching varies with the climatic conditions, soil fertility level and method of thatch removal.

Dethatching fescues is often recommended in late summer, early fall or spring when the potential for cool, moist climatic conditions is high. Dethatching can also be an effective lawn renovation tool. Fescue lawns weakened during hot, dry summer months can be dethatched in early September just before broadcasting seed to improve the seed contact with soil.

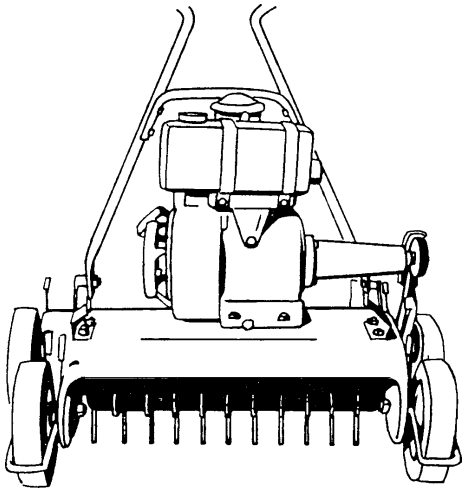

Figure 8. Vertical mowers are engineered for thatch removal.

Aeration

Frequently trafficking the lawn can eventually compact soils, producing a compressed surface layer 2 or more inches deep. The volume of large pore space is severely reduced in compacted soils and the movement of air, water and nutrients into these soils is limited. As a result, the growth of roots and aerial shoots of the fescues is often severely restricted. Fescue lawns maintained on heavily compacted soils are usually thin, weak and weedy. Coring (core aerification), slicing and spiking are methods of selectively cultivating compacted soils.

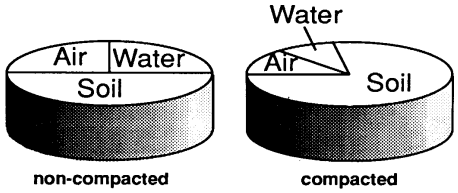

Figure 9. The volume of large pore space is severely reduced in compacted soils and the movement of air, water and nutrients into these soils is severely limited.

Coring

Vertical- and rotary-motion core cultivators (core aerifiers) relieve soil compaction by removing small (i.e. 1/4- to 3/4-inch diameter) soil cores and depositing them on the lawn surface. Core lengths of 2 3/4 to 3 or more inches are common when the soil is moist during coring. After cores have air-dried, a steel drag mat, section of chain link fence or dethatcher may be used to break up cores and redistribute the soil. Coring often improves the response of fescues to fertilization, stimulates growth atop and within aeration channels and speeds water movement from the soil surface into the soil. Mixing soil from aeration cores with thatch usually increases its rate of decay.

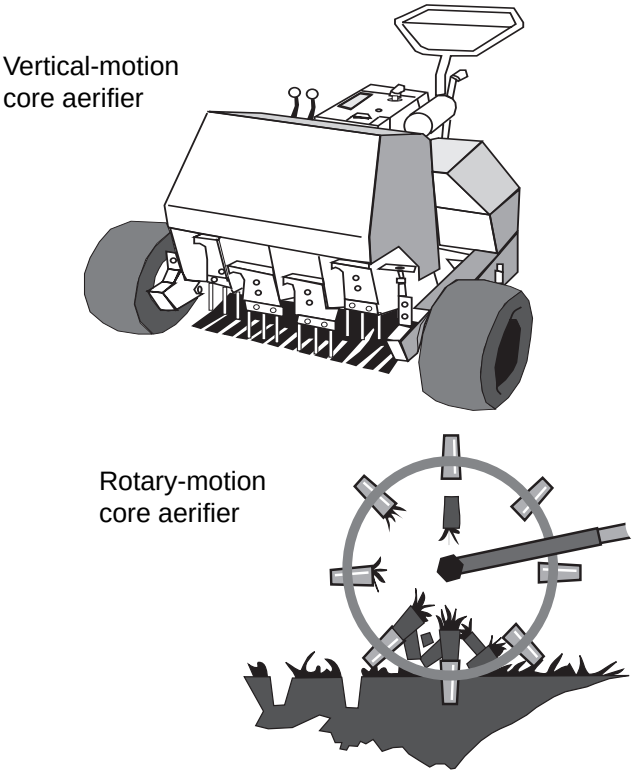

Figure 10. Vertical- and rotary-motion core cultivators (core aerifiers) relieve soil compaction by removing small soil cores and depositing them on the lawn surface.

Slicing and Spiking

Although the beneficial effects are much shorter lived than from coring, slicing and spiking are less intense forms of cultivation. Slicing is the process by which a lawn is penetrated by V-shaped knives mounted on disks. Similarly, spiking is a method of cultivating the lawn using solid tines or flat-pointed blades to enter the soil surface.

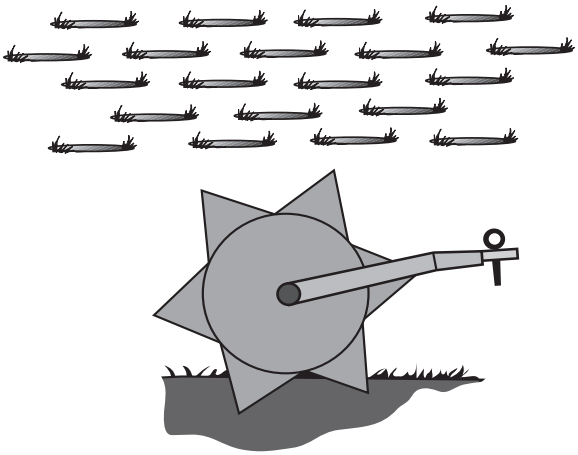

Figure 11. Slicing is the process by which a lawn is penetrated to a 3- to 4-inch soil depth by V-shaped knives mounted on disks.

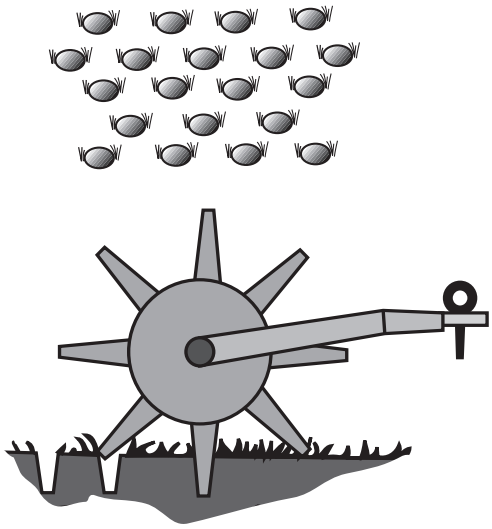

Figure 12. Spiking is a method of cultivating the lawn using solid tines or flat-pointed blades to enter the soil surface.

Coring, slicing and spiking fescues growing in heavily compacted soils is usually recommended in late summer, early fall or spring when the potential for cool, moist climatic conditions is high. Coring, slicing or spiking before broadcasting seed over an established fescue lawn often improves seed contact with soil.

Pests of Fescues

Diseases

In Tennessee, fescues are prone to several diseases. Rhizoctonia brown patch is the most common disease of tall fescue. Brown patches up to 3 feet in diameter may develop during warm, moist climatic conditions. Large grey or tan lesions may appear on infected leaves and a “smoke” ring may appear along the edge of each patch. Other diseases including fairy ring, Helminthosporium leaf spot, red thread, rust, stripe smut and white patch also attack one or more species of fescues. For more precise information regarding these diseases, please refer to Extension **PB842, Lawn Diseases and Their Control**.

Insects

Very few of the many insects living in the lawn injure fescues. Insects that do cause damage are classified as root-feeding, shoot-feeding or burrowing. Larvae of several Scarab beetles, including green June beetle, Japanese beetle, ataenius and chafers, are frequent pests of the fescues in Tennessee. These white grubs often feed on plant roots. When large white grub populations exist, severely damaged fescues can often be rolled back like a carpet. Periodically, armyworms, cutworms and sod webworms may feed on aerial shoots. Ants, burrowing bees and wasps often nest in fescue lawns. For information regarding insects and their control in fescue lawns, please refer to Extension **PB1342, Commercial Turfgrass Insect Control**.

Weeds

The best weed control is a healthy, actively growing and dense lawn. The presence of many weeds in fescues may indicate the need to adjust the lawn care program. A successful weed management plan begins with the identification of existing weeds.

Lawngrass weeds are divided into two major groups: weed grasses and broadleaf weeds. Smooth crabgrass, large crabgrass, goosegrass and foxtails are summer annual weed grasses. They usually begin emerging from seed in the spring, grow very fast during summer months and complete their life cycle or die by late fall. Seeds of annual bluegrass, a winter annual weed grass, germinate in late summer, fall and winter. Annual bluegrass plants usually complete their life cycle in the spring. Lespedeza, prostrate spurge and prostrate knotweed are examples of low-growing, summer annual broadleaf weeds. They begin emerging from seed in the spring and invade fescue lawns during summer months. Henbit, common chickweed and speedwell are winter annual broadleaf weeds frequently observed in fescues during fall, winter and spring. Perennial weed grasses and broadleaf weeds live for more than two years. Dallisgrass, nimblewill and

orchardgrass are perennial weed grasses. Mouse-ear chickweed, white clover, ground ivy and buttercup are persistent, creeping perennials. Dandelion, broadleaf plantain, buckhorn plantain and curly dock are non-creeping perennial broadleaf weeds. Wild garlic and wild onion, perennial weeds found throughout Tennessee, reproduce by bulbs and seeds.

An effective mowing, fertilization and irrigation program can result in fewer herbicide applications. If a herbicide is necessary to suppress or control a weed problem, choose and apply an appropriate product very carefully. Herbicides in the **relatively non-toxic**, and **slightly toxic** categories (signal word required on the product label = CAUTION) are preferred. Some herbicides are applied just before weeds are expected to appear. These preemergence herbicides often reduce the need to apply postemergence (to actively growing weeds) herbicides. Postemergence herbicides are usually most effective when applied to young, actively growing, emerged weeds. For more information, please refer to Extension **PB956, Lawn Weeds and Their Control**.

The successful maintenance of quality tall and fine fescue lawns in Tennessee requires both the development and implementation of a lawn care program. This program can be changed over the years, based on observed results. Due to variable annual climatic conditions, weed pressure, and disease and insect activity, the total number of mowings, irrigations and required pesticide applications often change from year to year. However, several environmental factors remain as basic requirements for the growth and persistence of the fescues. These are: light, air, water, nutrients and proper temperatures.

Renovation

Insufficient light, restricted air movement, limited water availability, high temperatures and inadequate nutrition often result in a sparse fescue lawn. At times, a weak lawn can be renewed without complete reestablishment. Generally, an existing fescue lawn can be successfully renovated if the fescue comprises at least 50 percent of the total ground coverage. Walk-behind and tractor-drawn slit-seeders are designed to plant seeds below the soil surface in rows (i.e. spaced 2 to 3 inches apart) with minimum damage to established fescue lawns. These machines may be available for rental at many lawn and garden equipment dealerships and outdoor power equipment rental companies. Several lawn care professionals may offer lawn renovation as a contracted service. For more information regarding the renovation of fescue lawns, please refer to Extension **PB1248, Renovating Fescue and Kentucky Bluegrass**.

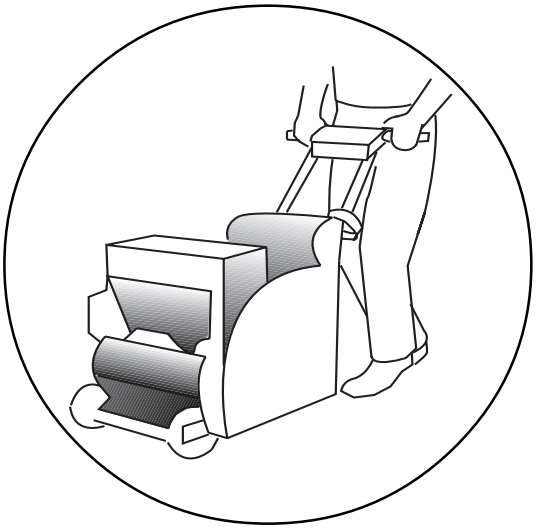

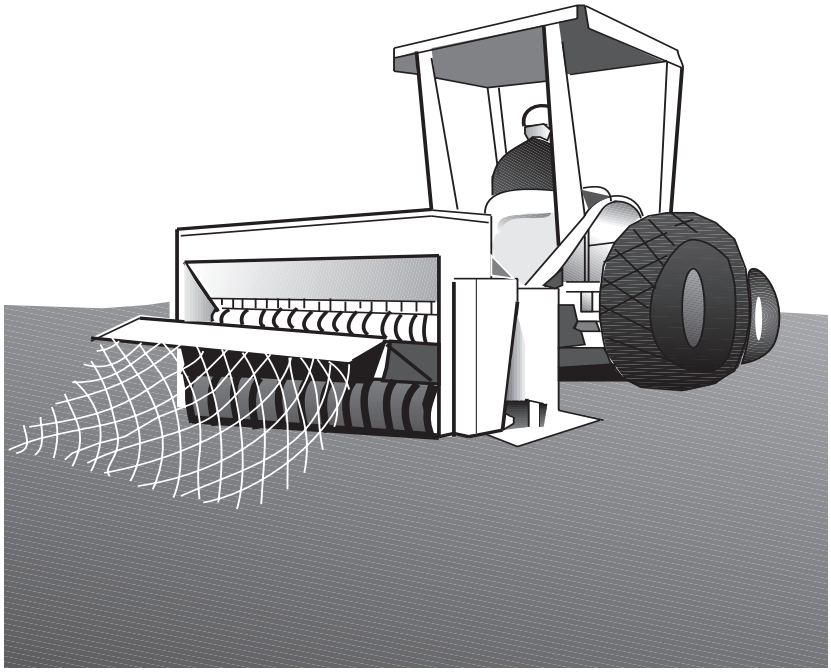

Figure 13. Walk-behind and tractor-drawn slit seeders can be used to renovate a weak fescue lawn.

Fescue(s) Management Calendar[1]

Month	Jan.	Feb.	Mar.	Apr.	May	Jun.	Jul.	Aug.	Sep.	Oct.	Nov.	Dec.
Fescue Management Practice												
Mowing	m[2]	m	M[2]	M	M	m	m	m	M	M	M	m
Fertilization			f[3]	f					F[3]	F	F	
Irrigation	i[4]	i	i	i	i	I[4]	I	I	i	i	i	i
Aeration			a[5]	a					A[5]	a		
Dethatching			d[6]	d					D[6]	d		
Seeding			s[7]					S[7]	S			

[1] Location, soils, previous management and other factors influence the fescue's performance. This calendar is intended to serve as a quick reference for the monthly care of the fescues.

[2] m indicates that although climatic conditions may limit fescue growth, mowing may be required during the month; M indicates that climatic conditions may favor rapid plant growth and the fescues may require frequent mowing this month.

[3] f indicates that fertilization is recommended this month. The recommended amount of quickly available nitrogen (N) is 1/2 pound N per 1,000 square feet; F indicates that fertilization is recommended this month. The recommended amount of quickly available N is 1 pound N per 1,000 square feet. The amounts of phosphate (P_2O_5) and potash (K_2O) to apply should be determined by soil test.

[4] I and i indicate that irrigation may be required to supplement precipitation during the month. I indicates that the amount of water lost to transpiration and evaporation usually greatly exceeds the amount of monthly precipitation.

[5] A and a indicate that, if necessary, fescues may be core aerified, sliced or spiked this month. Aeration during September is preferred, especially if seed will be broadcast over the lawn. Aeration immediately before broadcasting seed often improves seed contact with soil.

[6] Mechanical dethatching is recommended when 1/2-inch of thatch develops. D and d indicate that the fescues may respond favorably to dethatching this month. September is the preferred month for dethatching. Dethatching just before broadcasting seed over the lawn often improves seed contact with soil.

[7] S and s indicate that fescues may be seeded during this month. Late summer (i.e. late August to mid-September) seeding is usually preferred. Although wet soils often make soil preparation difficult, the fescues may also be seeded in March. However, seedlings emerging from seed planted in late winter and spring may be severely weakened or killed by high temperatures and drought in summer. Seeding the fescues too late in the fall often results in immature plants very prone to low temperature and drought stresses in winter.

The Agricultural Extension Service offers its programs to all eligible persons regardless of race, color, age, national origin, sex, disability, veteran status or religon and is an Equal Opportunity Employer.
COOPERATIVE EXTENSION WORK IN AGRICULTURE AND HOME ECONOMICS
The University of Tennessee Institute of Agriculture, U.S. Department of Agriculture,
and county governments cooperating in furtherance of Acts of May 8 and June 30, 1914.
Agricultural Extension Service
Charles L. Norman, Dean