University of Tennessee, Knoxville
Trace: Tennessee Research and Creative Exchange

Field & Commercial Crops | UT Extension Publications

7-1999

PB962 Producing Cantaloupes in Tennessee

The University of Tennessee Agricultural Extension Service

Follow this and additional works at: http://trace.tennessee.edu/utk_agexcrop

Part of the Agronomy and Crop Sciences Commons

Recommended Citation
"PB962 Producing Cantaloupes in Tennessee," The University of Tennessee Agricultural Extension Service, ,
http://trace.tennessee.edu/utk_agexcrop/47

The publications in this collection represent the historical publishing record of the UT Agricultural Experiment Station and do not necessarily reflect current scientific knowledge or recommendations. Current information about UT Ag Research can be found at the UT Ag Research website.
This Production is brought to you for free and open access by the UT Extension Publications at Trace: Tennessee Research and Creative Exchange. It has been accepted for inclusion in Field & Commercial Crops by an authorized administrator of Trace: Tennessee Research and Creative Exchange. For more information, please contact trace@utk.edu.

Agricultural Extension Service
The University of Tennessee
PB 962

Producing Cantaloupes in Tennessee

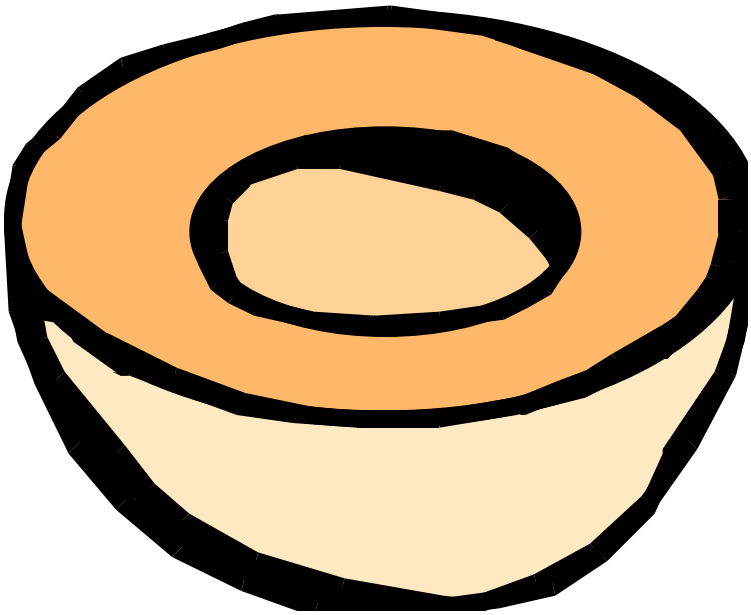

Table of Contents

Marketing 3
Soils 3
Site 3
Seed 4
Growing Early Plants 4
Varieties 4
Production Economics 5
Crop Rotation 5
Fertilizer and Lime 7
- Nitrogen 7
- Phosphate 7
- Potash 7
- Calcium 7

Spacing 8
Planting Date 8
Extending the Season 8
Growing on Plastic 9
Trickle Irrigation 10
Bed Preparation 10
Fertigation 11
Pollination 12
Disease Control 12
Insect Control 14
Cultural Insect Control 16
Chemical Control 16
Equipment for Applying Fungicides and Insecticides 16
Sprayer Calibration 16
Weed Control 17
Harvesting, Grading, Packaging and Cooling 17

Producing Cantaloupes in Tennessee

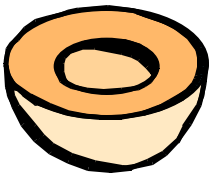

Alvin D. Rutledge, Professor, Plant and Soil Science

Cantaloupes are a warm-season crop that requires 70 to 90 days, depending upon the variety, from seeding to marketable fruit. Their consumption has increased by 11 percent since 1958. Almost all of the increase in consumption can be credited to the installation of salad bars in fast-food restaurants.

Cantaloupes are very sensitive to cool temperatures. If they are exposed to cool temperatures (50 degrees or less) for short periods of time during the growing period, growth will be severely stunted. Plants will continue to survive, but their growth rate and fruit set rate per plant decreases.

About 700 acres of commercial cantaloupes are grown in Tennessee. About 300 of these are on bare-ground and the remainder is grown on plastic with trickle irrigation. Annually, they contribute about $4.1 to $4.5 million into the state's agricultural economy.

Marketing

If you are considering the production of cantaloupes for something other than local retail sales, don't make the mistake of planting a crop and then trying to determine how to move it once it matures. At maturity, cantaloupes will need to be placed on the market in two or three days. Thus, waiting to line up a market at maturity could result in a disaster from the income standpoint. Cantaloupes are harvested over an 8- to 10-day period, and will be harvested two or three times per crop. Thus, it is possible that the buyer will want a supply from early July until early September, especially if there are several stores that must be furnished. If this is the situation, then it is possible to maintain a supply over a longer period of time with scheduled multiple plantings. This assumes that labor and equipment are available to conduct the production operations.

To market cantaloupes requires some knowledge of what the market requires. A local retail sales outlet can function with a specific variety handled individually. However, a larger volume wholesale outlet may require a specific variety packaged into bins with a specific count delivered on a regular basis. To do so requires a knowledge of when the fruit has reached sufficient maturity to have maximum sugar content and maintain maximum shelf-life. To effectively make arrangements for marketing requires that contact with buyers be made ahead of planting and that communication continue throughout the growing season.

Many aspects of marketing cantaloupes are associated with good production practices. Several of those will be discussed throughout this publication. As you read the publication, pay attention to those practices that influence market quality and appropriately apply them to your production program.

Soils

Cantaloupes grow best on moderately deep to deep soils that have both good water drainage and moisture-supplying capacity. Medium-textured soil (silt loams and sandy loams) with a pH of 6.0 to 6.5 is preferred.

Although organic matter is desirable for improving tillage and water-supplying capacity, most of the soils in Tennessee contain relatively little of this material. Soils with good water drainage reduce fruit-cracking potential when excessive rainfall occurs at maturity. Poorly drained soils and low-lying areas without good surface drainage may not favor good sugar development during maturity.

Site

Locate cantaloupes in areas with good air drainage. Low-lying areas may create conditions conducive to the development of diseases such as downy and powdery mildew. Plant cantaloupes in areas that warm up rapidly in the spring. This promotes more rapid plant growth and earlier fruit, which is an economic advantage.

Seed

Most cantaloupe diseases can be carried in or on the seed. Because of this, seed grown in the drier areas of the West are heavily favored over local seed. They have fewer disease problems, so every effort should be made to purchase them. Avoid trying to carry over seed from one year to the next, especially if the seed has not been properly stored. Such seed may germinate, but the growth rate is likely to be reduced.

Growing Early Plants

For earlier fruiting, cantaloupes can be started in containers and transplanted to the field when all danger of frost has passed. In fact, a few consecutive days of exposure to temperatures in the 50s results in a reduction of plant growth and possibly an abortion of flowers. If cantaloupes are started in greenhouses or hotbeds, seeds must be planted in containers that can be set in the field. Don't use containers that must be removed, because breaking the plant roots induces shock. Cantaloupes do not easily recover from such shock.

The containers should not be less than 2 inches in diameter so the roots will be less likely to penetrate the side-walls before plants are taken to the field. Plant the seeds in containers two or three weeks before the intended field setting date. In research plots in Tennessee and surrounding states, plants started in containers and transplanted to bare ground resulted in twice the yields of direct-seeded cantaloupes grown on bare ground. The less damage done to roots at transplanting, the faster the growth occurs. For further information about growing plants, refer to Extension PB 819, **"Vegetable Transplant Production,"** available at your county Extension office.

Varieties

One of the best ways to improve cantaloupe flavor is to select varieties proven to produce high-quality fruit year after year under the environment and climate common to Tennessee. Some of the more recent hybrid varieties are particularly productive. Recommended varieties are in Table 1.

Table 1. Recommended Cantaloupe Varieties

Variety	Approximate Size (Lbs)	Use	Comments
Athena	5 - 6	Shipper. Local sales	Very pleasant aroma. Foliage tolerates downy mildew.
Burpee Hybrid	4.5 - 5	Local sales.	Excellent flavor, vigorous vines. May crack at maturity.
Eclipse	6 - 7	Shipper. Local sales.	May compete with Athena. Foliage tolerates both powdery mildew and F_2[1/]. Slightly larger fruit than Athena.
Primo	4 - 5	Shipper	Tolerant to powdery mildew and to sulfur applications. Yields have been very good in West Tennessee.
Star Headliner	4 - 5	Local	Tolerates powdery mildew and F_2[1/]. Slightly elongated fruit. Thick flesh.
Starship	4.5 - 5.5	Shipper. Local retail.	Fruit hold well on vine. Good shelf life. Tolerates F_2[1/] and powdery mildew
Summet	3.5 - 4.5	Shipper	Mid to late maturing. Tolerates powdery mildew.

1/ F_2 resistance to strain 2 of fusarium wilt.

When selecting varieties, match the variety to the market. If the major market is for wholesale sales, then grow a variety that meets the desires of that market. If sales are made through local retail, choose the variety most favored by that market. Keep in mind that mildew, both downy and powdery mildew, as well as alternaria, can be very serious on most cantaloupes grown in Tennessee. When possible, select varieties with resistance to the more common cantaloupe diseases. Some varieties do not endure shipping or storage well. Some varieties will crack excessively at the time of harvest, while others will not crack and do not present a problem for future sales.

Since all of the varieties listed in Table 1 are hybrids, seed should not be saved from individual fruit for future planting.

With the changing consumer demand for fresh cantaloupes, it is becoming more important for growers to evaluate the cracking and shipping characteristics of different varieties. Growers should avoid varieties that crack excessively or do not hold up well in shipment.

Production Economics

Detailed production figures will not be discussed here, but a summary of the estimated costs and returns per acre is provided.

Table 2. General Production Economics (Per-acre Basis)

Item	Bare Ground	Plastic
Labor(hrs)	143	170
Production cost	$660[1]	$1,340[2]
Quantity sold	3,500[3]	6,000[4]
Gross revenue	$3,690	$6,600
Net to land, labor and management	$2,960	$4,380

1/ Does not include a labor cost of $751.
2/ Does not include a labor cost of $880.
3/ Revenue projections based on selling 800 large at $1.50, 1,860 medium at $1.00 and 840 small at $0.75 each. These are local retail sales prices. If melons are sold wholesale, then revenues will be based on the number of bins of a specific count x price.
4/ Assumes an average of $1.10 for 6,000 fruit, but is subject to change based on the method of sales.

Of course, income varies due to the planting date, competition with shipped melons coming into the state and with the production system. As a result, there is no guarantee that the above returns are possible every year. To make a reasonable estimate of the potential return from cantaloupes, figure that one year out of five will be a high-yield year, three will be medium-yield years and one year will be very low or approach zero. When the fruit numbers are high and a good marketing program has been implemented, per-acre returns can be very profitable, especially when production occurs on plastic.

Crop Rotation

Disease problems can be reduced, but not eliminated, by practicing rotation annually. Rotation is the most economical way to aid in the control of certain soil-borne diseases. Rotation with a grass, legume or grain crop is a good practice when it can be conducted within a farming program. In addition, rotation with a grass or grain crop reduces the potential for a nematode buildup. Vegetables in the same grouping are likely to be susceptible to the same disease organisms. Those groups are summarized in Table 3. Rotate these groups so vegetables from one group are not planted in the same location more than once every three to five years.

Table 3. Vegetable Groups Susceptible to the Same Diseases

Group A	Group B	Group C
Cantaloupe Cucumber Honeydew melon Pumpkin Squash Watermelon	Brussels sprouts Cabbage Cauliflower Collards Lettuce Mustard Radish Rutabaga Spinach Swiss chard Turnips	Eggplant Irish potato Okra Pepper Tomato
Group D	**Group E**	**Group F**
Beet Carrot Garlic Onion Shallot Sweet potato	Sweet corn	All beans Cowpea Peas

The following rotational programs are possible when grouping vegetables as illustrated in Table 3. To illustrate, allow the circle to represent the primary crop being grown. If group A is the primary group, then it can be rotated the following year with B, C, D, E, or F. When group B is the primary group, then it can be rotated with either A, C, D, E, or F. This can be followed until each group has become the primary group and rotated respectively as illustrated with each circle.

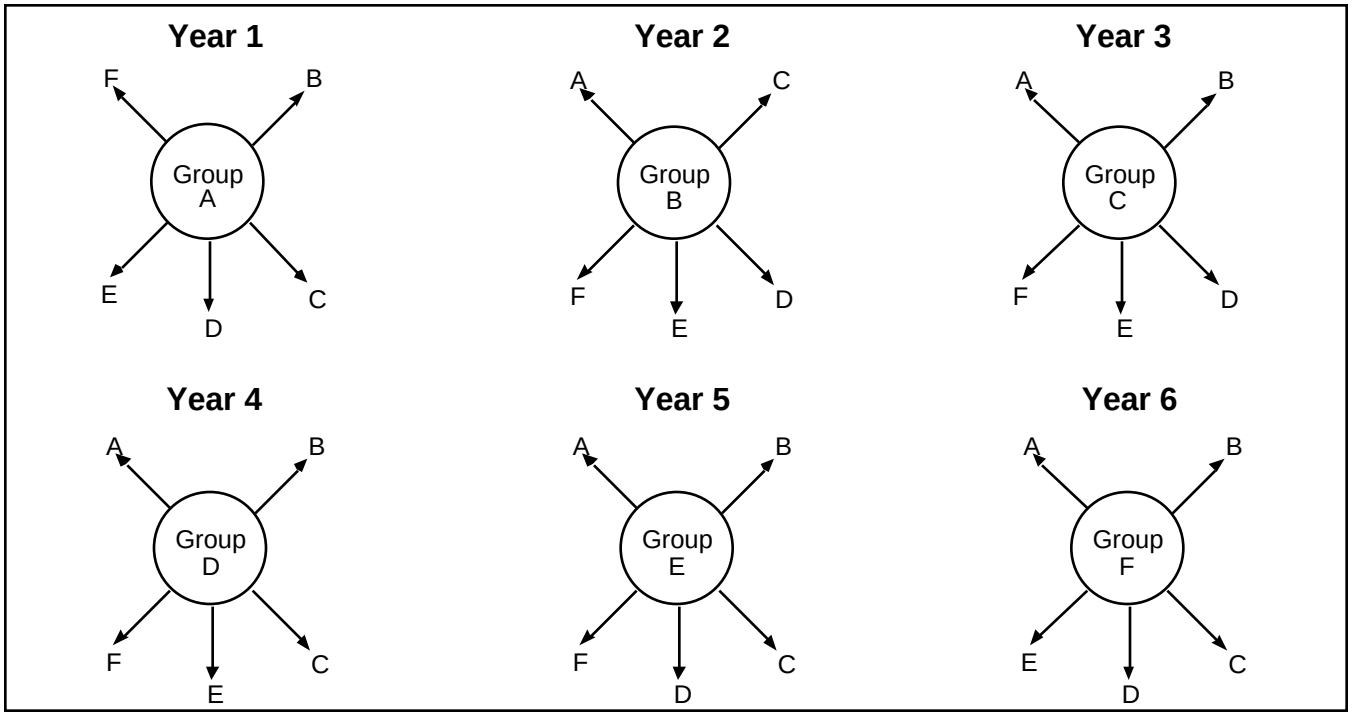

Fertilizer and Lime

Lime, phosphate and potash applications should be based on soil test recommendations. Recommendations are as follows.

Table 4. Cantaloupe Fertilizer Recommendations

Soil Fertility Level	Fertilizer Pounds Per Acre	
	P_2O_5	K_2O
Low	90	60
Med	45	30
High	0	0
Very High	0	0

For phosphate and potassium application through trickle irrigation, refer to the section on fertigation in this publication.

Nitrogen: At planting, apply 30 to 40 pounds of nitrogen per acre and sidedress with an additional 15 to 30 pounds when the runners are 12 inches long or at early bloom.

P and K: For most efficient fertilizer placement at planting, apply nitrogen, phosphate and potash in a 2- to 2.5-foot wide strip in the row area. This will reduce weed growth between the rows.

Calcium: Soils with a pH of 6.0 or less will require lime, but the amounts are based on the buffer pH. Be sure that soil tests are made and that adequate calcium levels are present. It is recommended that growers request a calcium analysis when they take a soil sample. Calcium, provided by the addition of lime, has two major effects on cantaloupe fruit quality. It reduces problems associated with blossom-end-rot and it improves the availability of fertilizers applied for growth.

Table 5: Fertilizer Deficiency Symptoms Common to Cantaloupes

Nitrogen	A general yellowing of the individual leaves and the entire plant occurs, usually beginning with the older leaves first. Affected leaves turn yellow and may dry up, depending on the severity and time of corrective measures. Fruit become tapered toward the blossom end. Fruit are also small, light-colored and may lack net development.
Phosphorus	Internodes become shortened and the plant is stunted. The leaf veins and petioles may turn a red-dish-purple.
Potassium	The younger leaves develop an upper cupped characteristic. Fruit may be tapered toward the stem end. Marginal necrosis of the leaf tissue occurs. Fruit may develop a gritty flesh and a bitter taste.
Calcium	Leaf margins stop expanding and the leaves cup downward. A calcium deficiency may also result in blossom-end rot or dry rot of the fruit. Always check the calcium levels during the soil test to reduce this potential.
Magnesium	Older leaves develop a yellowing between the veins. The veins remain green, while the remainder of the leaf turns yellow. Young leaves curl, turn brittle and dry up.
Iron	Leaves in the terminals or the younger leaves develop yellowing between the veins while the older leaves remain green.
Manganese	Young leaves are mottled and develop yellow or chlorotic spots between the veins. During severe deficiencies, the chlorotic spots may also show small, round to irregular, brown, necrotic spots.
Boron	The growing point, or runner tip, turns yellow and dies.
Molybdenum	The older leaves develop a yellowing between the veins similar to magnesium deficiency. In the advanced stages of deficiency, the leaf margins turn brown. Plants may be severely stunted. This may be associated with a low soil pH.

Spacing

Cantaloupes can be spaced 5 or 6 feet between rows. If you plan to spray for insect and disease control, it is usually best to plant three to five rows and skip two rows to allow spraying equipment to move easily through the field without damaging plants. An effective in-row spacing is 2 to 3 feet between plants.

If production is conducted on plastic, a water wheel may be used to punch holes in the plastic at the desired spacing and either seed or plants can be inserted.

Seed and plants per acre required at varying row spacings are given in Table 6.

Table 6. Seed and Plants per Acre Required at Varying Row Spacings.

Row Spacing(ft)				
Between row	**Within row**	**Linear feet of row per acre of land**	**Plants per** acre	**Ounces of seed at 4 seed per hill[1]**
5	2	8,712	4,356	15
5	3	8,712	2,904	10
6	2	7,260	3,630	12
6	3	7,260	2,420	6

1/ If planting is done in blocks of five rows with two rows left open for spray purposes, then reduce these figures by 28 percent.

Planting Date

Cantaloupes are very sensitive to cold soil and air temperatures. Temperatures below 55 F result in reduced growth and yields. Plants exposed to temperatures at that level may remain green and show some growth, but they may never recover from the exposure. Usually, they will only produce two or three fruit per plant, while those that have not been exposed may produce up to five or six per plant. Thus, avoid planting when plants or seeds will be exposed to either of these conditions. Starting plants in containers with a large enough root ball to hold them until the danger of cold temperature is past increases the potential for good yields. This is especially true if early yields are desired for fresh market sales. The planting date will vary in different areas of the state and in accordance with the expected harvesting date. However, the approximate earliest field planting dates are as follows:

West Tennessee: April 25 to May 1

Middle Tennessee: Southern counties, May 1 to 10
Cumberland Plateau and northern counties, May 5 to 15

East Tennessee: Lower elevations, May 5 to 15
Higher elevations, May 10 to 20

Extending the Season

When market prices permit a profit, cantaloupes can be planted in some areas of the state so they can be harvested from late June through early September. *In fact, there have been some growers who have done quite well with cantaloupes planted so they would mature about one week before the Labor Day weekend.* After Labor Day, both prices and demand decrease. This offers an opportunity for cantaloupe growers in these areas to use multiple planting dates to supply a market over an extended period of time.

Prices and supplies vary throughout the growing season, but melons sold on the local market usually command a higher price in late June and early July than they do at other times of the season. Wholesale prices, however, usually vary during the season and years due to the supply. There have been seasons when cantaloupes sold on the wholesale market have done no better on the early market than they did on late markets.

The most reliable way to extend the season is to locate a buyer who has an interest in handling the crop throughout the season. It then becomes the grower's responsibility to provide a reliable supply throughout the growing season. This will usually lead to an increase in sales in following years.

Multiple crops can be produced with correct planning and management. Multiple crops will reduce the potential for weather to completely destroy a crop or render it unmarketable because of drought or too much moisture at the time of maturity. Multiple crops can be handled by: (1) starting the first crop in containers in the greenhouse about three weeks before the intended field planting date. Lay plastic for the first crop prior to the first planting date for both the first and second planting; (2) The day after the plants have been transplanted through the plastic, direct-seed a second crop through the plastic and (3) direct-seed a third crop about two weeks after the second crop was planted either to bare ground or through white plastic rather than black.

Using the above multiple crop system, it is possible to produce a crop of cantaloupes and have them ready for harvest from about June 25 through the Labor Day weekend in September.

Cantaloupes can also be grown in double-crop systems with strawberries produced on plastic if there is a suitable market for late cantaloupes. To accomplish this, kill all strawberry plant residue after harvest with Gramoxone herbicide. Then seed cantaloupes directly through the plastic. Keep a uniform moisture level throughout the season when using this system.

Growing on Plastic

There are four advantages to growing cantaloupes on black plastic. The primary advantage is the weed control that is possible. The second advantage is the potential for earlier yields when plastic is applied at the proper time. Third, it is possible to greatly increase per-acre yields. Generally speaking, production on plastic without irrigation raises the yields about 1.5 times that of bare ground, while yields produced with drip irrigation under the plastic are 1.5 to 2 times those of bare-ground production. Finally, fruit will usually be larger, cleaner and have less decay than those produced on bare ground.

If black plastic is to be used to promote early growth, it should be laid 10 days to two weeks before the expected planting date. This increases the soil temperature, hastens the emergence of seeds and promotes more rapid growth of roots. If properly applied and used, black plastic may enable growers to harvest seven to 10 days earlier than cantaloupes not grown with plastic.

When late production is to be done on plastic, it is usually best to produce on white plastic during the hotter summer months. There will be less total vine damage due to heat and yields will not be reduced.

The disadvantages of using black plastic are the expenses involved, the difficulty in applying, the inability to effectively sidedress, the reduced movement of rainfall under the plastic and disposal of plastic at the end of the season. All fertilizer must be applied before the plastic is laid unless a trickle irrigation system is equipped to allow the application of fertilizer through the trickle system as described under "Fertigation."

In the last few years, research with different colors of plastic (green, red, blue, silver, yellow) has been done at The University of Tennessee and other land grant universities to evaluate cantaloupe yields. Almost all of the darker-colored plastics produce yields comparable to that commonly produced on black plastic. However, yields have not been consistently great enough to justify a large increase in cost if different colors are more costly to apply.

Cantaloupes being grown on plastic to promote earliness, cleaner fruit and higher yields.

Trickle Irrigation

Trickle or drip irrigation is a method of slowly applying small amounts of water directly to the root zone of the plants. Water is monitored frequently and applied as needed, sometimes daily, to prevent a water stress in the root zone. It is rapidly becoming a common production practice with cantaloupes. If plastic is used with trickle irrigation, the irrigation must be installed before laying the plastic.

Trickle irrigation has several advantages when compared to sprinkler irrigation. Smaller water sources and lower flow rates can be used. Drip irrigation requires roughly half the water needed by sprinkler systems. Lower operating pressures are required, so less energy is needed for pumping. The pump and pipe network required to deliver the water is smaller and therefore less expensive than sprinkler systems. A high degree of moisture control is possible, as plants are supplied with only the amount of water they need. Foliar disease problems are reduced, since the leaves are not wet. Labor and operating costs are generally less because extensive automation is possible. In dry years, there is less weed growth between the rows due to water placement.

To be effective, the water supply for a trickle system should be very clean. Filtration will have to be conducted to remove any fine particles that may be present in the water source. The cleaner the water source, the better the system will function. Ponds that contain high levels of sediment or suspended soil particles normally are not very suitable, because they will not normally pass through the drip line or the water emitters. Double or triple sand filters with back-flush capabilities are usually installed to remove solid particles in the water before it is transferred to the drip lines.

A diagram of a trickle system using plastic mulch is provided in Figure 1.

Bed Preparation

If the land has crop or plant residue carryover, it must be turned under several weeks before the intended plastic installation date. All crop residue must be completely decayed so there will not be any plant stubble to puncture the plastic during and after installation. It is necessary to work the land to a depth of 7 to 8 inches. Shallow preparation will not be sufficient to form a firm, shaped bed. Prior to running the shaper, a double-disc coulter is used to form ridges large enough to completely fill the shaper. This is to assure that there will be sufficient soil collected to make a complete fill and taper of the bed surface during the shaping operation. If the shaper is not full and cannot pack the bed firmly, there is likely to be a small furrow at the center of the bed. The bed should be 1.5 to 2 inches higher in the center than on the shoulders to enable rainfall to run off easily. Thus, a shaper should be built

to enable this type of formation. In addition, if the bed and shoulders are not firm, they will break away during both installation of the plastic and after installation, making efforts at developing a bed futile. The final bed height is normally 6 to 8 inches and about 30 to 36 inches across the surface.

The drip tape is installed at the same time as the plastic. The tape is fed under the plastic through a curved metal or plastic tube that is aligned about 6 inches off-center of the bed. This "off-center" alignment reduces the potential to puncture the tape with the water wheel as it punches holes to insert seed or plants. The tape is buried underneath the soil surface about 1.5 inches deep to prevent "snaking" when it is exposed to higher temperatures. The plastic mulch is rolled out over the bed and the tape after all necessary adjustments to the installation equipment have been made, so the plastic forms a 90-degree angle with the bed. This enables a smooth application to the bed surface without wrinkles or rolls in the plastic. An opened furrow (formed by an opening disc) enables placement of the plastic mulch edge in the furrow that is pressed down by a rubber press wheel and held until it is covered by a covering disc.

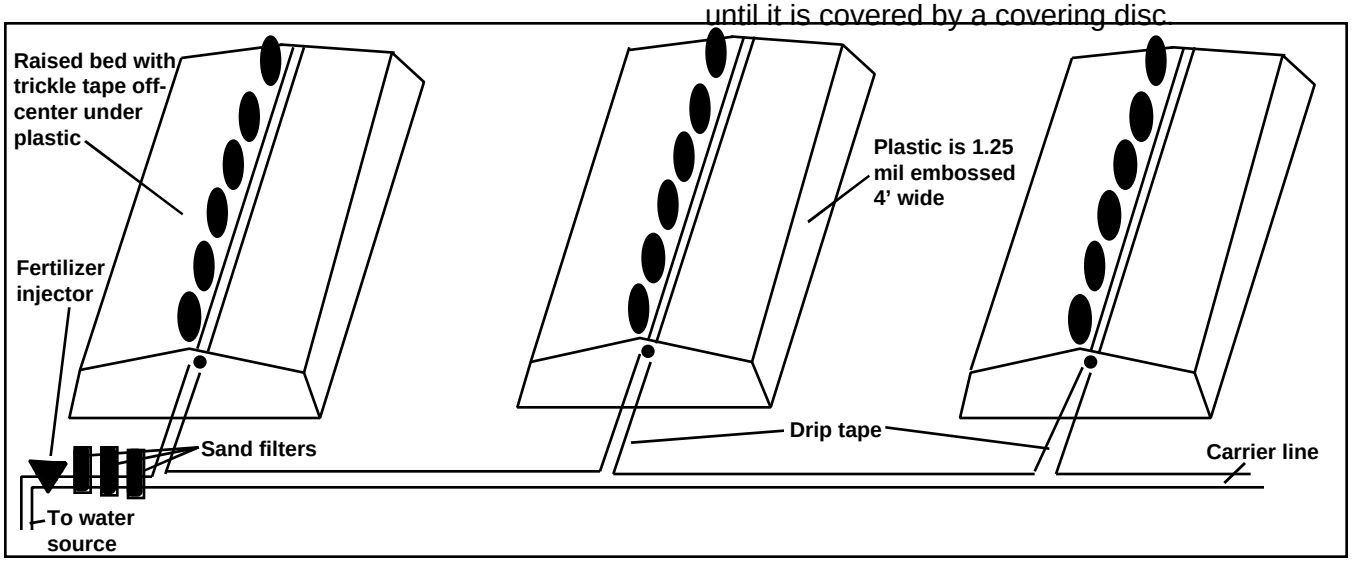

Figure 1. Illustration of trickle irrigation and plastic system.

Fertigation

If necessary, soluble fertilizers can be applied through the system and delivered only in the root zone. Some growers are using fertigation to make low-level fertilizer applications either on a weekly or daily basis, depending upon their equipment and desired frequency of application. Using this system can create some problems in producing marketable cantaloupes. Water applied too frequently can result in a high number of cracked fruit. Therefore, a grower must monitor the moisture level under the plastic and hold it at field capacity rather than applying too frequently and encountering soil saturation conditions.

Generally, the most frequent problem associated with trickle irrigation is that inexperienced growers will not monitor the moisture levels adequately and not apply water either frequently enough or in great enough volumes to provide field capacity. When the expense of installing a system is incurred, then efforts should be made to learn the proper techniques to make it a profitable investment.

Problems associated with trickle systems include the quality of the water source, the blockage of the small emitter orifice, limits in moisture movement through the soil, rodent damage to the plastic lines and the higher degree of management required than other systems.

The components of a trickle irrigation system are a pump, filters, valves, pressure regulators, lateral lines with emitters and possibly a fertilizer injector. The size and type of each will depend on the acreage to be covered, changes in terrain elevation, source of water and the plant spacings used. In some situations, in-line pressure regulators will need to be installed to maintain uniform in-line pressure. These are more likely to be required

on rolling or sloping fields. More detailed information is available through your county Extension office. When cantaloupes are grown on plastic with fertigation, all of the recommended phosphate and one half of the recommended nitrogen and potash should be worked into the soil prior to laying the plastic. The remaining nitrogen and potash are then distributed weekly throughout the growing season.

Pollination

Cantaloupes do not have male and female flower parts at the same location on the plant. For fruit production to occur, pollen from the male flower must be transferred to the female flower. Honeybees are currently the most effective method of pollination. Usually, about one beehive per three acres is sufficient to provide pollination, assuming a high number of healthy, active bees are present in the hive.

The tracheal and varroa mites that are affecting the bee population throughout the state have resulted in a loss of about 50 percent of the bee colonies. Unless more dedication in controlling this problem is initiated, the honeybee losses may result in a reduction in total fruit set per acre. Growers, be aware of these problems and make every effort to provide controls and take every possible measure to protect the bees.

After the male flower blooms, it will fall from the vine. It can be distinguished from the female flower by the absence of small fruit at the base of the flower. The first flowers to form are usually male. An illustration of the difference between a male and female flower is provided in Figure 2.

As a result, several male flowers will drop from the vine before fruits begin to develop. *If the young cantaloupe on the female flower turns yellow and drops, it was probably not pollinated.* If that happens, it will be necessary to evaluate pollination conditions. During periods of moist, cool weather, there is usually a larger number of male flowers set than females. The normal ratio is six to eight male flowers to one female, but it may be much higher during the above weather conditions. As the number of female flowers increases, the number of fruits set will increase. Unfortunately, many of the insecticides used for insect control in cantaloupe production are injurious to honeybees. Therefore, extra precautions are needed to protect bees from being severely injured or killed.

One effective precaution is to apply insecticides as late in the afternoon as possible. This will allow materials to be applied when flowers are partially closed and reduces potential kill of honeybees. Another effective precaution is to use spray materials that are specific to the insect in question but not harmful to honeybees. It is also advisable to contact any local beekeepers and negotiate a working relationship about the application of insecticides.

Pollination is reduced when temperatures drop below 70 F, during periods of wet weather at bloom time or during periods of reduced bee activity.

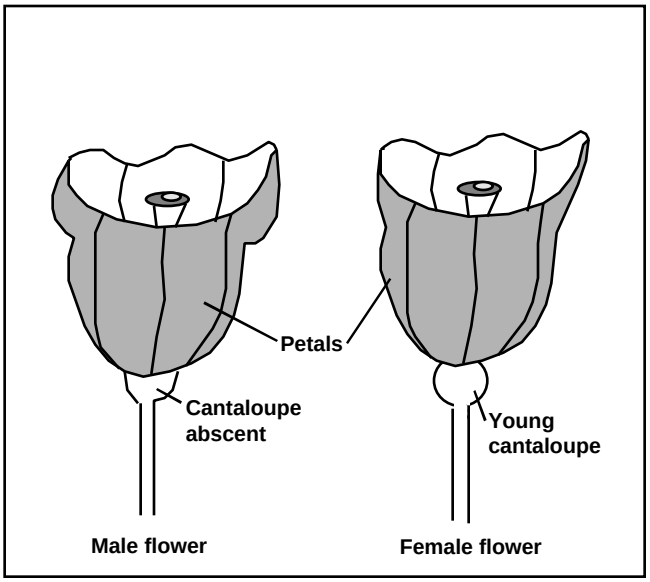

Figure 2. Male and female flower illustration.

Disease Control

Cantaloupes are very susceptible to several dieases that can wipe out a complete field in a short time. Effective control measures are necessary to prevent severe losses from a disease outbreak. Control methods include both sanitary and chemical measures.

Sanitary measures include using new seed (preferably Western-grown), planting seed that have been treated with a recommended fungicide, using a minimum of a three-year rotation between crops, buying certified seed or transplants and sterilizing all the plant-growing facilities. Growing resistant varieties, when available, is also an excellent disease-control measure.

Chemical measures involve the use of recommended fungicides to control diseases. To be effective, fungicides must be applied before visible evidence of the disease appears on the foliage. Effective control will require that growers become

knowledgeable of the weather conditions that favor the development of certain diseases. It is much easier to provide a good preventative measure before the disease results in a major loss. Keep in mind, however, that the weather is not the only factor that influences the development or transmission of a disease. Insects, for example, can be good vectors of certain diseases, such as bacterial wilt. Once certain diseases are visible, some of them can be slowed down but still may do considerable damage. The fungicide must be applied to as much of the foliage, both top and bottom, as possible. This usually requires the use of sprayer equipment that produces small spray droplets. A sprayer with cone-tip nozzles capable of delivering high volumes at high pressures is the most effective. Refer to the section on "Equipment for Applying Fungicides and Insecticides" in this publication.

Recommended chemical control measures are found in Extension PB 1282, **"Commercial Vegetable Disease, Insect and Weed Control,"** available at your county Extension office. A description of the more common diseases affecting cantaloupes in Tennessee is provided in Table 7.

Table 7: Common Cantaloupe Diseases and Their Descriptions

Disease	Description
Alternaria leaf spot	Small, circular tan leaf spots appear first on the oldest leaves near the center of the plant. As the spots enlarge, they form concentric rings that resemble targets.
Angular leaf spot	Initially, water-soaked appearing spots appear on the leaves. In moist conditions, bacteria ooze from the spots in tear-like droplets which dry to a white residue. These areas may tear away from the healthy leaf, leaving irregular holes in affected leaves.
Anthracnose	Foliage spots begin as yellowish or water-soaked areas that enlarge rapidly and turn brown. The dry, dead tissue breaks and shatters, or the whole leaf dies. Elongated lesions appear on the stems. Fruit symptoms are most noticeable. They are circular, black, sunken spots.
Downy Mildew	The first symptoms on leaves appear like mosaic with pale-green areas separated by areas of darker green tissue. These areas eventually change to yellow angular spots. During moist weather, the lower leaf surface of these spots is covered with a purplish fungus-fruiting layer.
Gummy Stem Blight	Vines or nodes may appear oily-green. Sap may exude from node tissue and dry to form resin-colored gum. Stems may sometimes crack open.
Bacterial Wilt	Sudden wilt and death of individual runners. To assist in identification, cut two short sections from the infected stem. Place the cut sections in front of a dark background. Touch the cut ends of the sections together and slowly begin to pull them apart. Observe for a thin thread of material that stretches as the ends slowly separate. If the thread occurs, bacterial wilt is present.
Powdery Mildew	The first symptom is white talcum-like powdery growth, usually standing on the underside of crown leaves. The areas of white powdery growth may eventually cover the entire leaf. The leaf may wither and die, becoming dry and brittle.
Nematodes	Plants wilt. Show slight recovery during rainfall. Root-not nematodes cause knots or galls to develop on both large and small roots. Roots become enlarged.

Table 8: Recommended Disease-control Strategies for Cantaloupes

Disease	Use Resistant Varieties [a]	Follow Balanced Fertility Program [b]	Scout for Signs	Apply Recommended Fungicide [c]	Control Weeds [d]	Allow for Good Air Movement	Destroy Crop Residue	Rotation [d]
Alternaria Leaf Spot	x	x	x	x	x	x	x	x
Angular Leaf Spot		x	x	x	x	x	x	x
Anthracnose	x	x	x	x	x	x	x	x
Bacterial Wilt		x	x	e	x	x	x	x
Downy Mildew	x	x	x	x	x	x	x	x
Gummy Stem Blight		x	x	x	x	x	x	x
Fusarium Wilt	x	x			x			x
Nematodes		x	x	Nematacide[f]	x		x	x
Powdery Mildew	x	x	x	x	x	x	x	x

a. Always use certified, disease-free seed and purchase disease-free plants.
b. Following a balanced fertility program includes conducting a soil test and following the recommendations provided.
c. Always be sure that the method of application enables thorough and total coverage of the foliage.
d. Rotate with non-cucurbit crops for a minimum of two or five years with non-fusarium wilt resistant varieties. These diseases can be carried over from year to year on cucurbit weeds or cantaloupe volunteers.
e. Bacterial wilt is carried by Cucumber Beetles. Thus, the best control is to control the beetles using practices recommended in Extension **PB 1282 "Commercial Vegetable Disease, Insect and Weed Control."**
f. Controlling may require injection of a labeled insecticide through the trickle irrigation system or fumigation.

For further descriptive information concerning the symptoms of diseases affecting cantaloupes, refer to **Extension SP 403, "Diseases of Cucurbits,**" available at your county Extension office.

Insect Control

Cantaloupes are subject to attack by aphids, spotted and striped cucumber beetles, melon worms and pickle worms, spider mites and wireworms. Both sprays and dusts are available for controlling insects. Sprays, however, are usually more effective than dusts because they provide more thorough foliage coverage.

The first step in controlling insects is to properly identify the insect. A description of the common insects attacking cantaloupes is described in Table 9. The Agricultural Extension Service can help with insect identification and provide information for control. Extension PB1282**, "Commercial Vegetable Disease, Insect and Weed Control,**" available at your county Extension office, lists chemicals currently recommended for control.

Table 9: Insects That Commonly Attack Cantaloupes

Insect	Description	Feeding Area
Aphids	Aphids live in colonies on the underside of the leaves. They are soft-bodied, oblong insects that rarely exceed 3/32 of an inch long. They have two exhaust pipe-like cornicles on the rear of the abdomen. They may be red, green or black in color depending on the species.	Aphids feed on young growing points of plants. The feeding habit causes the leaves to curl indownward and they may almost entirely roll up depending on the severity of the infestation.They transmit many of the viruses that affect cucurbit crops.
Cucumber beetles	These insects are transmitters of "bacterial wilt." There are two types of cucumber beetles. One is striped and the other is spotted. The larvae of the spotted type is also known as the southern corn rootworm. The body of these insects is yellow-green. The striped beetle has three black stripes running lengthwise of the body.The spotted beetle has 12 black spots on the wings.	They feed on the young stem, leaf and blossom tissue early in the spring after plants emerge or after they are transplanted. During their feeding, they render considerable damage to the tissue as well as transmitting the bacterial wilt disease. They must be controlled very early in the life of the plant to reduce wilt damage at plant maturity. They will normally be found around the base of the young leaf tissue.
Leafhoppers	The adult leafhopper is a pale green, wedge-shaped insect that is about 1/16 inch long. It is very active, jumping or flying when disturbed. Both the nymphs and the adults can run backwards or sideways as rapidly as they move forward.	Leafhoppers cause damage to plant leaf and stem tissue by removing the plant juices with their sucking mouthparts. Their feeding causes spotting, yellowing, leaf curling, stunting and browning of the foliage. Sometimes, they will transmit virus diseases.
Leafminers	The adults are very tiny, shiny black flies with yellow markings. The larvae are white to pale in color and mine the leaves between the upper and lower epidermis.	The larvae feed between the upper and lower leaf surface, producing slender, white, winding trails quite visible on top of the leaf.
Melon worms and pickle worms	The white areas of the wings of the melon worm moth is pearly, iridescently white. The margins are velvety black. The moth is a day flier. The wings of the pickle worm moth have dark brown margins with central areas of light yellow. It is a night flier.	The melon worm larvae feed on the foliage and later mine the fruit and stems. The pickle worm larvae also mine the fruit, but usually on the underside, entirely ruining them for market.
Spider mites	Spider mites are normally less than 1/64 of an inch long. They vary in color from a green to yellow or red with dark spots. It normally requires a good hand lens to locate them.	Mites normally feed on the lower side of leaves by sucking plant juices. The feeding usually results in tiny, white spots that gradually become gray and turn brown, finally resulting in leaf drop.
Wireworms	Wireworms are shiny, slender, cylindrical, hard-bodied, wire-like, yellow to brown larvae that can be found almost any time of the year and in almost any soil. The adults are known as click beetles.	Wireworms damage plants by feeding on seeds in the soil, by cutting off small underground stems and by boring into larger stems, roots and tubers.

Cultural Insect Control

Thoroughly prepare the soil at least two to three weeks before planting and keep the field free of weeds. Plant the first crop as early as the temperature and market will permit. Use good cultural practices, because a vigorous, healthy plant is more resistant to insect damage.

After harvest, turn under crop debris or completely remove it from the field. Keep the field and its borders free of volunteer weeds and trash during the winter. This will reduce the over-wintering areas of many insects. Avoid fields that have been in grass or perennial vegetation for several years.

Chemical Control

It is usually necessary to begin insect control early in the growing season. Chemicals should be applied at five- to seven-day intervals to keep insects from feeding on the leaves or penetrating the stems.

Use sprayer systems that can provide the requirements listed under "**Equipment for Applying Fungicides and Insecticides"** in this publication.

Equipment for Applying Fungicides and Insecticides

A boom-type sprayer with the following specifications is suggested:

1. The capacity to apply 50 or more gallons per acre per application. About 50 gpa is usually sufficient when the plants are small, but it may require as much as 100 gpa when the plants are full grown and have full foliage.
2. Capability of 80 to 100 pounds pressure. This is necessary to insure good penetration down into and around the foliage.
3. Good agitation. Agitation reduces the settlement of wettable powders in the bottom of the tank and prevents non-uniform applications of chemicals.
4. Capability of covering the acreage fast enough to permit a five- to seven-day schedule.
5. Should contain enough nozzles to assure effective coverage of the vines at all stages of growth.
6. The nozzle arrangement and angles of in clination should provide for effective control of both sides of the leaves. The angles of inclination should be about 10 to 12 degrees from the vertical toward the direction of travel.
7. The nozzles should consist of a cone tip, disc, screen and cap.
8. Usually, a piston or diaphragm pump is the most effective pump to use.
9. If the spray volume pulsates, install a "surge" tank to provide a smooth rate of flow.

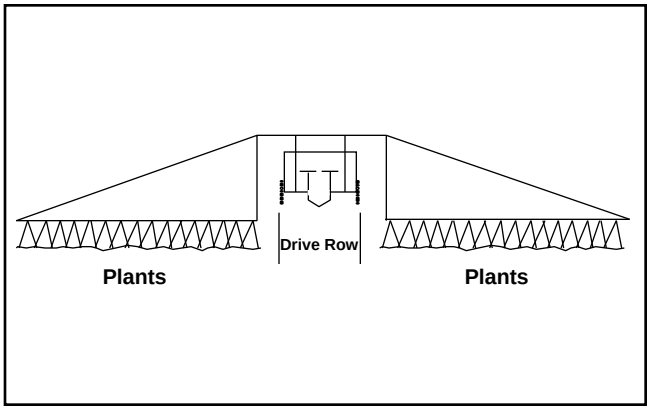

Figure 3. Spray system for applying pesticides.

Sprayer Calibration

Sprayer calibration is a production practice that too many farmers overlook. It is a very effective way to provide assurance that any chemical application is made as accurately as mechanically possible. Calibration accurately determines the gallons of liquid being applied to one acre of land. It is based on ground speed, pressure and time. Once the volume per acre is known, all a grower has to do to assure accurate applications is to mix the recommended rate of the specific chemical into the water and make the application at the same ground speed and pressure that was used to make the calibration. Calibration is better than guessing the rate to apply and to mix. For example, when it is determined that the sprayer is applying 100 gallons per acre, all that has to be done is to mix the label rate per acre of the chemical being used into 100 gallons. This will prevent over-mixing and having to dump expensive chemical because too much may have been mixed. Calibration will reduce the number of trips required to make an accurate application. When some chemical costs range between $294 and $595 per gallon, it doesn't take long for a mis-application to eat up a production budget or significantly reduce crop yields due to improper application.

To properly calibrate your sprayer, refer to **Extension SP 240, "Sprayer Calibration Guide,"** available at your county Extension office. It is quite easy to follow and enables an accurate calibration that improves both effectiveness and efficiency of chemical applications.

Weed Control

Weeds can be a major problem in cantaloupe production, particularly if they are allowed to go unchecked early in the growing season. Weeds provide a habitat for certain insects and they serve as host plants for several diseases. In addition, they compete for nutrients and water necessary to grow cantaloupes. Cantaloupes are low-growing plants and cannot shade weeds very well until they reach a sufficient growth stage that completely covers the soil surface. When possible, grow crops the year prior to planting cantaloupes that enable good weed control programs. This will help to reduce weed problems during the cantaloupe growing season.

There is no herbicide which provides both effective and total season weed control in cantaloupes. As a result, it may be necessary to include cultivation with any chemicals used when cantaloupes are produced on bare ground. When cultivation is necessary, it should be done only often enough and shallow enough to remove weeds. Deep cultivation results in root injury and yield reduction. However, fumigation can be used when rotational practices include the production of other high-value crops. Cantaloupes can fit well into this type of a production program. The use of plastic, as described earlier, is also an effective method to control weeds in the row. If weeds cause a problem between the plastic beds, a directed spray, as illustrated in Figure 4, can be applied to the weed foliage between the plastic beds.

Herbicides should be applied in 20 to 40 gallons of water per acre, with pressures ranging from 25 to 40 PSI. Current chemicals and application methods are given in Extension PB1282, **"Commercial Vegetable Disease, Insect and Weed Control,"** available at your county Extension office.

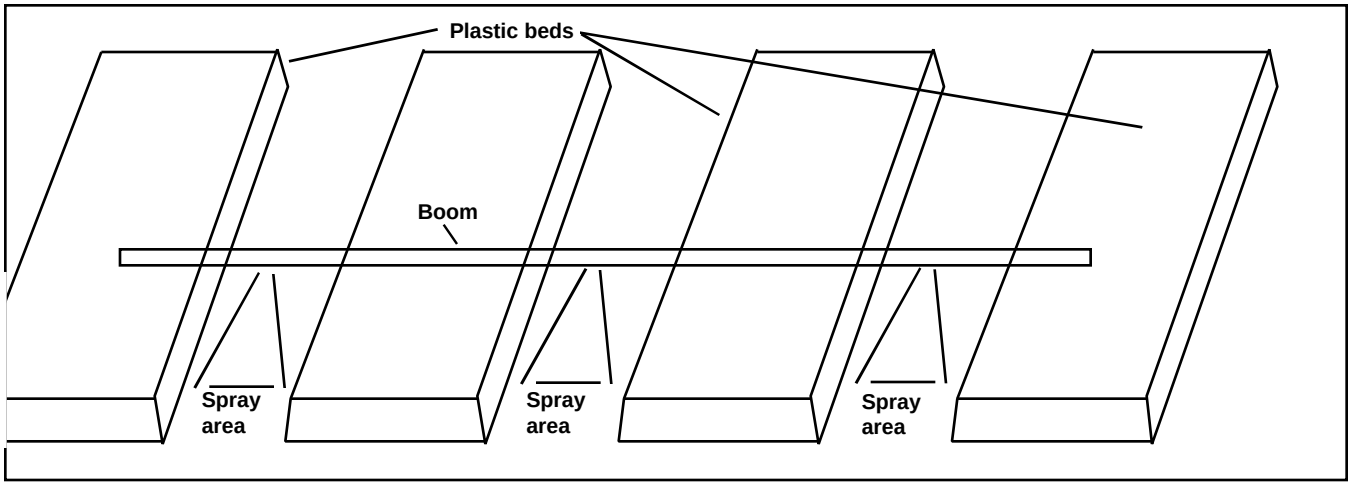

Figure 4. Illustration of a directed spray for weed control when cataloupes are being produced on plastic.

Harvesting, Grading, Packaging and Cooling

Nature has provided a unique way of identifying the ripening process in most varieties of muskmelons, especially the cantaloupe type. As the fruit approaches maturity, a light growth crack (abscission layer) develops at the joint where the fruit is attached to the stem. When this crack completely encircles the joint, the fruit is at the "full slip" stage and contains the highest amount of sugar it will attain under the conditions in which the plant was grown. Although it is always advisable to harvest muskmelons at "full slip" to maximize quality, some varieties intended for distant markets must be harvested just before reaching "full slip" maturity to avoid excessive losses from over-ripeness and decay. Each variety, production, harvesting and marketing situation will dictate at what stage the

fruit must be picked. It often becomes a compromise between what is best (full slip) for maximum quality versus what is practical to avoid post-harvest losses. Frequent harvests (even daily) and pre-cooling the fruit as soon after harvest as possible will allow the grower to harvest at or just before the fruit reach "full slip."

The term "half slip" is often applied to a situation where the abscission layer does not completely encircle the stem joint and the stem pulls off unclean or tears at harvest. "Half slip" melons are often more difficult to recognize than "full slip" melons. In addition, changes in fruit netting and surface color associated with "full slip" are more pronounced and recognizable at this stage. Fruit pickers must receive training and careful supervision in harvesting melons, especially at "half slip," to obtain a high level and uniformity of fruit quality.

The major quality factor in melons is the total soluble solids or sugar content of the fruit. Melons harvested at full slip may have as much as 15 percent soluble solids, while those harvested at half slip may range from 8 to 12 percent, depending on the variety and weather conditions under which maturity occurs. A soluble solids content of 11 to 12 percent is quite normal and is indicative of a good-flavored melon. Soluble solids can be measured quickly with a hand-held refractometer (Figure 5). One or two drops of internal juice from the fruit is squeezed onto the refractometer window, the window is then closed and a reading taken by holding the refractometer toward the light and viewing the readings. A clear line of demarcation occurs at the level of total soluble solids. After the readings are taken, the window is reopened and cleaned with very soft, moist tissue.

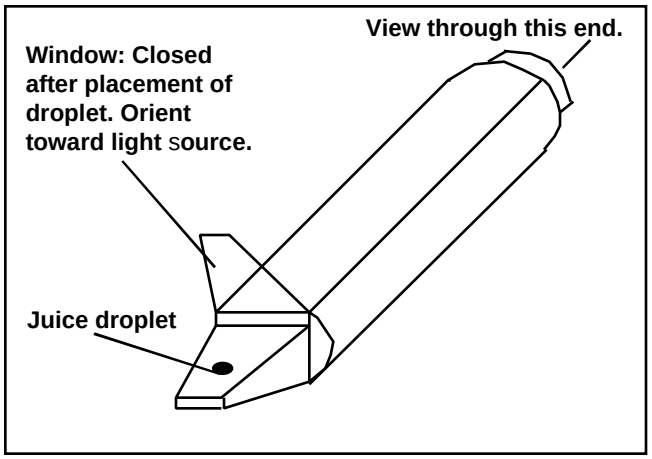

Figure 5. Illustration of a hand-held refractometer for checking soluble solids.

When harvesting, do not take any melons from dead vines. When vines die, full sugar content within the melon does not occur. Discard any melon that is small, cracked or shows symptoms of anthracnose, insect injury or other defects. Each of these factors reduces quality, flavor and shelf life of the melon. Cantaloupes are normally harvested over a period of eight to 12 days. Melons are either loaded onto trucks going directly to the local sales area or they are bulk packed into cardboard bins of the size specified by the wholesale buyer. When packed in bins, they can be palletized and loaded by a fork lift.

Cantaloupes need pre-cooling soon after harvest, especially if they are to be shipped, to remove the field heat. On days with high air temperatures, the internal quality within the fruit will degrade prematurely, resulting in low-quality melons with reduced shelf life. Room cooling is a good practice after the pre-cooling operation to maintain fruit quality. Melons harvested at the half-slip stage can be held for up to 15 days at 36 to 41 degrees and 95 percent relative humidity. Melons harvested at full slip and placed at 32 to 36 degrees will not maintain shelf-life as long as those harvested at half slip.

If the melons are to be sold to wholesalers, retailers, roadside markets or other market outlets, growers should contact their potential buyers several weeks before harvest and discuss:

1. The time of harvest and the expected volume.
2. Delivery time and frequency.
3. Cooling needs.
4. Packages required.
5. Number of melons per package.
6. Necessary arrangements for expected expiration of harvest.

When growing any vegetable crop, it is always good to start lining up market potential several weeks before the crop is ready. Once it is ready to go, it will not wait until a market is found if it takes a few days.

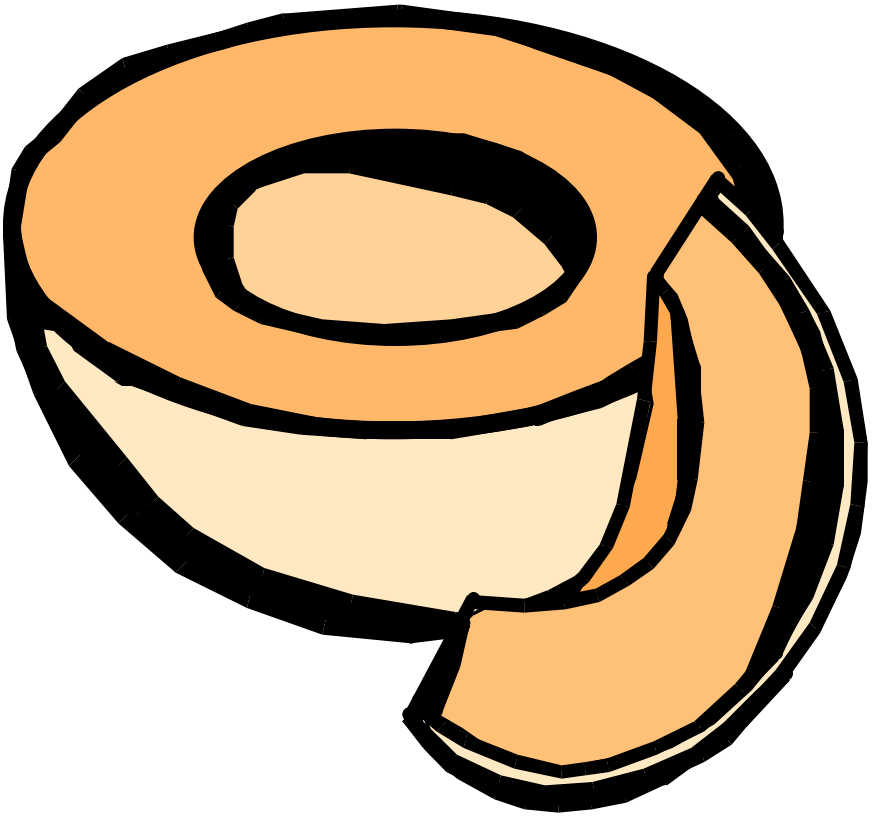

PB962-5M-7/99 (Rev) E12-2015-00-027-00

The Agricultural Extension Service offers its programs to all eligible persons
regardless of race, color, age, national origin, sex, disability, religion or veteran status
and is an Equal Opportunity Employer.

COOPERATIVE EXTENSION WORK IN AGRICULTURE AND HOME ECONOMICS
The University of Tennessee Institute of Agriculture, U.S. Department of Agriculture,
and county governments cooperating in furtherance of Acts of May 8 and June 30, 1914.
Agricultural Extension Service
Billy G. Hicks, Dean