University of Tennessee, Knoxville
Trace: Tennessee Research and Creative Exchange

Animals/Livestock | UT Extension Publications

12-2005

PB1760-Tennessee 4-H Horse Championships Handbook

The University of Tennessee Agricultural Extension Service

Follow this and additional works at: http://trace.tennessee.edu/utk_agexani

Part of the Animal Sciences Commons

Recommended Citation
"PB1760-Tennessee 4-H Horse Championships Handbook," The University of Tennessee Agricultural Extension Service, PB1760 5M 12/05(REV) E12-4415-00-006-06 06-0137, http://trace.tennessee.edu/utk_agexani/16

The publications in this collection represent the historical publishing record of the UT Agricultural Experiment Station and do not necessarily reflect current scientific knowledge or recommendations. Current information about UT Ag Research can be found at the UT Ag Research website.
This Horses is brought to you for free and open access by the UT Extension Publications at Trace: Tennessee Research and Creative Exchange. It has been accepted for inclusion in Animals/Livestock by an authorized administrator of Trace: Tennessee Research and Creative Exchange. For more information, please contact trace@utk.edu.

UT Extension

PB1760

4-H HORSE CHAMPIONSHIPS HANDBOOK

Tennessee 4-H
Horse Championships Handbook

This handbook is to serve as a guide for conducting the Tennessee 4-H Horse Show, Public Speaking, Team and Individual Demonstration Contests and the State 4-H Horse Judging Contest. Extension agents, 4-H Club members, parents, leaders and others involved with these events should read and become familiar with these rules, accept the responsibility to follow these guidelines and, upon signature and submission of entry forms, agree to abide by the rules and regulations. These rules are taken directly and indirectly from breed association rule books and altered to accommodate the Tennessee 4-H Horse Program participants.

Cover by F. Neal Smith, Western Region 4-H Specialist

Table of Contents

Objectives of the 4-H Horse Program	4
Purpose of the Tennessee 4-H Horse Show Program	4
Purpose of the Tennessee 4-H Horse Show Handbook	4
Use of the Name and Emblem of 4-H	5
Eligibility of Participants for the Tennessee 4-H Horse Show	5
General Information: 4-H Members and Horses	7
Forbidden Substances, Methods and Practices	9
Awards	9
Protests	9
State 4-H Horse Show Divisions	10
Southern Regional 4-H Horse Show	10
Western Division	12
Reining Patterns	21
Barrel Racing Pattern	27
Pole Bending Pattern	29
Hunter Division	36
Walking and Racking Division	42
Saddle and English Division	59
Spotted Saddle Horse	63
Pleasure Driving Class	70
Dressage	71
Miniature Horse Classes	74
4-H Horse Project Showmanship and Grooming Scorecard	74
The Quarter Method	76
State Horse Public Speaking Contest	77
State Horse Individual Presentation Contest	78
State Horse Team Presentation Contest	80
State Horse Judging Contest	82
Volunteer Leader Award	85

Tennessee 4-H
Horse Show Program Handbook

1. Objectives of the 4-H Horse Program

The 4-H Horse Program encourages 4-H members to:

•Develop leadership, initiative, self-reliance, a sense of fair play and other desirable character traits.

•Increase knowledge of all aspects of horse science and management of horses.

•Learn skills of horse management and an understanding of the business and career opportunities of breeding, raising, training, showing and judging horses.

•Experience the pride of owning (if possible) a horse or pony and being responsible for its care.

•Develop an appreciation of horses and horseback riding, which is a healthy form of recreation.

•Promote a great love for animals and a humane attitude toward them.

•Be better prepared for citizenship responsibilities through working in groups and supporting community services and horse activities.

2. Purpose of the Tennessee 4-H Horse Show Program

The purpose of the Tennessee 4-H Horse Show Program is to provide a progressive series of educational opportunities for 4-H members to exhibit their skills at the county, region, state, or regional and national levels. This program allows the 4-H members to participate in activities designed to improve their sense of citizenship, fair play, horse management, character, competitive attitude and self-discipline, while creating an atmosphere for learning and applying life skills.

3. Purpose of the Tennessee 4-H Horse Show Program Handbook

This handbook provides a uniform set of rules and regulations that are intended to standardize 4-H shows throughout Tennessee. It is suggested that these rules be used as a guide for county activities. Counties are encouraged to develop a 4-H horse program to meet local needs and to provide a wide range of educational activities, including a county 4-H horse show.

Some classes or divisions in the state 4-H horse show will not be applicable at either the county or region level. If the county or region does not have sufficient interest in a given class or division, it does not have to be held. The list of classes in this program should in no way limit or restrict a county or region program. Each county and/or region is encouraged to include any additional classes that are of a local interest. Only the classes listed in this handbook will be included in the Tennessee 4-H Horse Show.

4. Use of the Name and Emblem of 4-H

4.1. The use of the name and emblem of 4-H is regulated by federal law. This states that only activities or programs under the supervision of UT Extension may use the name and emblem of 4-H.

4.2. Any area (regional), region or state 4-H horse show must have the approval of the state 4-H office.

4.3. Local and county 4-H horse shows must have the approval of the Extension agent.

4.4. Shows or events sponsored by other organizations or individuals that provide separate classes for 4-H members are not permitted to use the name and emblem of 4-H without the approval of the state 4-H office.

5. Eligibility of Participants for the Tennessee 4-H Horse Show

5.1. To be eligible to participate in the Tennessee 4-H Horse Show, 4-H members must have been in the 4th grade on January 1 of the current year. The last year of participation is the end of the calendar year in which the 4-H'er becomes 19 years old or in which the 4-H'er graduates from high school.

5.2. Grade divisions are as follows:

- Junior — Grades 4 and 5
- Junior High — Grades 6, 7 and 8
- Senior — Grades 9, 10, 11 and 12

In classes where there is no Junior High division, the Junior class will include grades 4 – 8. The grade level is as of January 1 of the current year.

5.3. All 4-H members must complete a TENNESSEE 4-H HORSE ENROLLMENT FORM (F778) for each project horse on or before March 1 of the current year. The form(s) MUST be on file in the county Extension office.

5.4. To be eligible for the Tennessee State 4-H Horse Championships, a member must:

A. Be a bona fide 4-H member.
B. Show in at least one class at his/her respective regional 4-H horse show (see rule 5.6).
C. Have a current 4-H horse enrollment form dated on or before March 1 and filed with county Extension staff.
D. Be the member's project horse(s) (see 5.7).
E. Make entry for the Tennessee State 4-H Horse Championships at the regional 4-H horse show.

5.5. If a member shows in at least one class at his/her regional 4-H horse show, this qualifies the member and ALL the enrolled 4-H project horses of that member for entry at the Tennessee State 4-H Horse Championships. However, only officially enrolled horses that are properly entered in the Tennessee 4-H Horse Championships (ENTRY FORM F779) at the regional show will be allowed to show. ADDITIONALLY, ONCE A HORSE IS ENTERED IN A CLASS AT THE TENNESSEE STATE 4-H

HORSE CHAMPIONSHIPS, NO CLASSES CAN BE ADDED AND HORSE SUBSTITUTION WILL NOT BE PERMITTED. 4-H members may scratch horses from the various classes. An exception to this rule shall be allowed in equitation and showmanship and grooming classes ONLY. If a 4-H member's horse dies, becomes sick or unsound prior to qualifying at the regional show or before the state show, the member may substitute another 4-H member's horse or may purchase another horse. A veterinarian's certificate of the death, sickness or unsoundness of the horse must be filed with the Extension agent and brought to the regional or state 4-H horse show. Additionally, if a 4-H member becomes sick or injured prior to competing in a class at the regional show, that youth may show at the Tennessee State 4-H Horse Show provided a doctor's written certification is presented at the regional 4-H horse show. In both instances (horse or 4-H member), proper and timely entry must still be made in the Tennessee State 4-H Horse Championships AT THE REGIONAL 4-H HORSE SHOW.

5.6. A 4-H member may be excused from his/her regional show and still participate in the Tennessee State 4-H Horse Championships if:

A. A letter, signed by both the 4-H member and his/her respective Extension agent, is written stating the reason for the 4-H member's desire to be absent from the regional show.

B. This letter is submitted by May 1 of the current year and directed to the Extension horse specialist in Nashville.

C. The request is approved by a statewide review committee.

D. The 4-H member, family, leader or Extension agent completes a state entry form along with an entry fee at the REGIONAL 4-H HORSE SHOW.

E. The review committee will act promptly, and its decision will be communicated to the 4-H member in a timely fashion.

F. The review committee's decision shall be final.

5.7. The following conditions must be met if the horse is to be eligible as a project animal:

A. Member and family-owned: The horse is solely and unconditionally owned by the 4-H member or a member of his or her family (parent, brother, sister, grandparent or guardian). Single or combination ownership is permissible. The member must manage the horse at least 50 percent of the time. No more than two members of a family may use the same horse as a project animal. These two members must share management duties equally.

B. Non-family-owned: The horse is owned by someone other than a member of the immediate family:

(1) The member must manage the horse at least 50 percent of the time.

(2) No more than two members of a family may use the same horse as a project animal. These two members

must share management duties equally.

(3) A letter of certification and agreement signed by the owner(s) of the horse and the parent or legal guardian of the 4-H member must be approved by the 4-H leader before the horse can be accepted as a project animal. This letter, along with a picture of the horse, must appear in the record book. The member must have free access to the horse.

5.8. Each Extension agent must certify the eligibility of each member and the horse(s) from his/her county at each respective regional 4-H horse show.

5.9. A fee must be submitted for each class in which a horse is entered. A separate entry fee for cattle classes may be assessed.

A. Entry fees are to be submitted when entry is made.

B. Checks for the entry fees are to be made to the University of Tennessee.

C. Entry fees are non-refundable.

6. General Information: 4-H Members and Horses

6.1. It is mandatory that members be polite, be good sports and properly attired. Members are notified that any act of discourtesy or disobedience to the judge, to committee members or other officials on the part of the rider, owner, parents or trainer shall disqualify the horse and the member. A 4-H member MAY NOT receive any physical or electronic assistance in the ring after the youth has entered in the gate.

6.2. Dogs of 4-H members, parents or guests must be on leash at all times and are not allowed in buildings or show rings.

6.3. Cruel or rough handling of horses will not be allowed and may result in elimination at the decision of the judge and/or show committee.

6.4. Horses and ponies must be 3 years old to be shown in any performance class.

6.5. Stallions are ineligible to compete in any 4-H horse show.

6.6. Unruly and unsound horses will be excused from the ring. Determination of unruliness will be left to the judge and/or show committee. Determination of unsoundness will be left to the judge. Unsoundness shall not penalize a rider in equitation classes unless it is sufficiently severe to impair the performance of the horse or is detrimental to the horse's well being.

6.7. The exhibitor must make the choice of showing the animal as a horse or pony. An animal cannot be shown as both a horse and a pony in classes that have separate horse and pony designations. Pony heights for the five divisions are as follows:

A. Western Division – 58 inches and under

B. Hunter Division

(1) Small ponies – 54 inches and under

(2) Large ponies more than 54 inches and not to exceed 58 inches

C. Walking/Racking – 60 inches and under
D. Saddle/English – not applicable
E. Spotted Saddle Horse – 58 inches and under

6.8. All ponies in the Western and Hunter Divisions MUST be measured at the regional show in order to show in pony classes at the regional show. Additionally, an exhibitor must present "Pony Certification Form" at the state registration desk in order to enter pony classes at the state level.

A. If a pony was not shown, and thus was not measured at the area (Regional) Show, it may be entered into the state show BUT must be measured at the state show prior to pony competition.
B. If a "pony" is not measured, it will automatically become a HORSE entry.
C. Although an equine is measured as a PONY, it may be shown in HORSE classes instead of pony classes.
D. A pony may not show in BOTH pony and corresponding horse classes.
E. A pony WILL be measured only ONE TIME for pony certification.

6.9. A member can exhibit only one horse or pony in a class. The same horse MAY NOT be shown in the same class twice. A member may not enter more than one horse in a class.

6.10. PROOF OF A NEGATIVE COGGINS TEST FOR EQUINE INFECTIOUS ANEMIA FROM AN APPROVED LABORATORY WITHIN 12 MONTHS OF THE OPENING DATE OF THE SHOW MUST BE PROVIDED FOR EACH HORSE OR PONY TO BE EXHIBITED.

6.11. The original certificate showing proof of the negative Coggins test must accompany the horse and be presented before the horse & exhibitor may pick up an entry packet and show. The copy with the horse is the one that will be checked.

6.12. Horses that show clinical signs of infections or communicable disease shall not be stalled, shall be denied participation and must be removed from the grounds.

6.13. All exhibitors should check well in advance of the show with their veterinarian for a preventive health program review. A vaccination program should be considered and discussed with the veterinarian.

6.14. The age of horses will be determined as of January 1 of the year foaled. A horse becomes a year older on January 1, not on its actual birthday. (Exception: registered Tennessee Walking Horses, Racking Horses and Spotted Saddle Horses foaled in October, November and December may be considered foals of the following year).

6.15. Junior Horses – In Western division performance classes, reference to junior horses means 3, 4 and 5 years of age. Junior horses may be shown in a bosal/hackamore or snaffle bit and must be ridden with two hands.

6.16. Senior Horses – 6 years of age and older.

6.17. Courses, patterns and/or rules may be altered at the discretion of the Extension staff.
6.18. No trainers, parents or other adults are allowed to ride horses in primary show rings at any time.
6.19. No 4-H member will be allowed to ride his/her horse on any concrete or pavement at the state 4-H horse show. Exhibitors MUST lead their horses to the appropriate riding arena or ring. Areas where the 4-H members may mount on pavement or concrete will be designated with signs as a "mount area."
6.20. A "1 minute" time limit to enter the ring once a number is called for all entries of all classes will be imposed.
6.21. Hair may be added to the tail of any horse in any division.

7. Forbidden Substances, Methods and Practices

7.1. The administration of any drug affecting the central nervous system (stimulant or depressant) to a horse shown in any 4-H class is strictly prohibited.
7.2. Show management of all 4-H shows or 4-H classes have the right to have horses tested for drugs by a qualified veterinarian. Samples will be submitted to a suitable laboratory for testing, and the results of such tests will be provided to county and state Extension faculty for appropriate action. If the test is positive, the exhibitor will pay all veterinary and laboratory costs and forfeit all and any awards. Otherwise, the protesting party will be liable for such costs.
7.3. The use of irritants (including blisters, ginger or similar soring or pain-inducing substances or devices) that affect the gait, carriage or performance of the horse is forbidden.
7.4. Horses suspected of being under the influence of any drug, chemical or caustic agent that would alter their natural performance and/or horses having granulation tissue, raw or bleeding sores from old or new scars due to prior mistreatment shall be disqualified from competition.

8. Awards

8.1. Awards will be presented to the top 10 placings in each class. The first-place winner will be designated as Grand Champion. The second-place horse will be designated as Reserve Champion. Each entry will receive an appropriate award.
8.2. The judge shall not place any exhibitor regardless of the number of contestants in a class, if the exhibitor is unable to execute the prescribed maneuvers called for to complete the class.

9. Protests

9.1. A protest may be made in writing to the show committee by a leader or an exhibitor, when co-signed by a leader, for any violation of rules other than the judge's decision and pony height after declared by show officials.
9.2. The protest must contain a statement of the act(s) that

constitutes the alleged violation and the specific rule(s) allegedly violated.

9.3. The protest must be signed by the protestor(s) and accompanied by a deposit of $100 cash.

9.4. The protest must be filed within 30 minutes after the infraction in a class.

9.5. The protest (in writing) will be directed to the protest committee and will be decided upon as promptly as the situation permits.

9.6. If the protest is upheld, the $100 deposit shall be returned; otherwise, it shall be forfeited.

10. State 4-H Horse Show Divisions

10.1. The Tennessee State 4-H Horse Show will have five separate divisions. They are:

A. Western
B. Hunter
C. Walking/Racking
D. English/Saddle
E. Spotted Saddle Horse

To maintain division status, the division must have 10 horses competing at the state horse show. If less than 10 horses are exhibited for two consecutive years, the division will be eliminated.

10.2. Horses are eligible to be shown in two divisions plus pleasure driving and dressage at the Tennessee 4-H Horse Show. Miniature horses may show only in miniature showmanship, halter and pleasure driving classes. A 4-H member may enter only one halter class per division. County and/or regional 4-H horse shows may allow members to exhibit in more than two divisions. Horses may not be cross-entered between corresponding horse and pony classes.

10.3. Points will be compiled separately for each horse entered. Division champions will be determined based on one horse/one rider. A division winner will be announced for each division. However, in the Walking/Racking Division a separate winner will be announced for walking emphasis and racking emphasis.

10.4. All classes will receive points except team penning (Western), pleasure driving and classes for miniatures. Team roping points will be divided between header and heeler equally.

10.5. Each member will be awarded points based on the following sliding scale (State and Southern Regional):

A.

PLACING	1	2	3	4	5	6	7	8	9	10
No. horses/class										
1	1									
2	2	1								
3	3	2	1							
4	4	3	2	1						
5	5	4	3	2	1					
6	6	5	4	3	2	1				
7	7	6	5	4	3	2	1			
8	8	7	6	5	4	3	2	1		
9	9	8	7	6	5	4	3	2	1	
10	10	9	8	7	6	5	4	3	2	1
More than 10	10	9	8	7	6	5	4	3	2	1

11. Southern Regional 4-H Horse Show

11.1. Tennessee can send 42 horses to participate in the Southern Regional 4-H Horse Championships.

11.2. All members must pay their own expenses to attend and participate in the Southern Regional 4-H Horse Show. ALL ENTRIES MUST BE MADE AT THE STATE SHOW.

11.3. Qualification Procedure

A. Priority will be given to the top-point-earning senior members, followed by the top-point-earning junior high and junior members. Senior, junior high and junior members must have earned three points to be eligible for consideration for Southern Regional participation. The high-point junior high and junior in each division will be included in the top 42 contestants. However, if a full quota is not achieved with the preceding criteria, members with lesser points will be considered, with seniors receiving priority.

B. Qualification will be based upon three categories as follows:

CATEGORIES: DIVISIONS OF CLASSES (TN 4-H HORSE SHOW)

(1) WESTERN Western Division (all classes)
(2) HUNTER Hunter Division (all classes)
(3) SADDLE English/Saddle Division, Walking/Racking Division and Spotted Saddle Horse Division

C. Members may qualify in only one category. (See Note below). If members qualify in more than one category, they choose which category they will qualify in, thus which horse they will take.

D. The 42 members will be from the Western, Hunter and Saddle (Saddle/English, Walking/Racking and Spotted Saddle Horse Divisions) categories. The number of members from each of these categories will be determined on the percentage of members exhibiting in each category. A member is counted only once in each division.

E. Members will be ranked by classifications (senior, junior high and junior) within each category from highest- to lowest-point earners to determine qualified members.

F. If allocations for any of the Western, Hunter or English categories are not taken, those remaining will be proportionally distributed between the other two categories.

G. If allocations still remain, then those members who qualified more than one horse may take a second horse based upon the highest to lowest point-earning members in that group.

H. Tie Breakers

(1) Points in most number of classes.

(2) Highest placing in showmanship and grooming class.

(3) Highest placing in equitation class.

(4) Age as of January 1, of the current year – priority to the older member.

I. Tennessee youth will be required to wear hard hat with harness in speed events at the Southern Regional Horse Show.

NOTE: Tennessee 4-H members only qualify through this procedure. At the Southern Regional 4-H Horse Show, they may enter one conformation class, one showmanship class and as many other performance classes as they want.

12. Shoeing Requirements, Use of Pads, Weights and Chains

All horses entered in the show must conform to the current USDA regulations regarding shoeing requirements, weights, chains and pads for that breed.

Western Division

This division is designed for "stock-type horses" (Quarter Horse, Paints, etc.) and will be judged according to those standards and gaits.

1. Gaits

1.1 The "walk" is a natural, flat-footed, four-beat gait. The horse must move straight and true at the walk. The walk must be alert, with a stride of reasonable length in keeping with the size of the horse.

1.2. The "jog" is a smooth, ground-covering, two-beat diagonal gait. The horse works from one pair of diagonals to the other pair. The jog should be square, balanced and with a straight, forward movement of the feet. Horses walking with their back feet and trotting on the front are not considered performing the required gait. When asked to extend the jog, the horse moves out with the same smooth way of going.

1.3. The "lope" is an easy, rhythmical, three-beat gait. Horses moving to the left should lope on the left lead. Horses moving on the right lead should lope on the right lead. Horses traveling at a

four-beat gait are not considered to be performing at a proper lope. The horse should lope with a natural stride and appear relaxed and smooth. The horse should be ridden at a speed that is a natural way of going.

2. Attire

The 4-H members must be properly dressed.

A. Long-sleeved shirt, with collar (stand-up collars are permitted)
B. Long pants or riding skirt
C. Belt
D. Hat (no ball caps)
E. Tie is optional
F. Boots or hard shoes (no deck or tennis shoes) with a heel and high enough to cover the ankle.
G. Chaps and spurs are optional.

3. Tack

3.1. In all western classes, horses will be shown in a western saddle. Silver equipment will not count over a good working outfit. Horses 5 years old and younger may be shown in a snaffle bit, hackamore/bosal, curb bit, half-breed or spade bit. Horses 6 years old and older may only be shown in a curb bit, half-breed or spade bit. Chain chin straps are permissible, but must meet the approval of the judge, be at least 1/2 inch in width and lie flat against the jaw of the horse.

3.2. Optional equipment

A. Protective boots, except in western pleasure, trail and halter, where they are not allowed.
B. Leg wraps, except in western pleasure, trail, showmanship at halter and western horsemanship, where they are not allowed.
C. Tie-downs for roping, speed events and team penning.
D. Running martingales for speed events and team penning.
E. Spurs, not to be used forward of the cinch.

3.3. Prohibited equipment

A. Wire chin straps, regardless of how padded or covered.
B. Any chin strap narrower than 1/2 inch.
C. Martingales and draw reins, except for speed events and team penning.
D. Nosebands and tie-downs, except for roping, speed events and team penning. However, these cannot have any bare metal in contact with the horse's head.

3.4. In roping, speed events and team penning, western type equipment must be used. The use of a hackamore (including mechanical hackamores) or other type of bridles is the optional choice of the contestant; however, the judge may prohibit the use of bits or equipment he/she may consider inhumane.

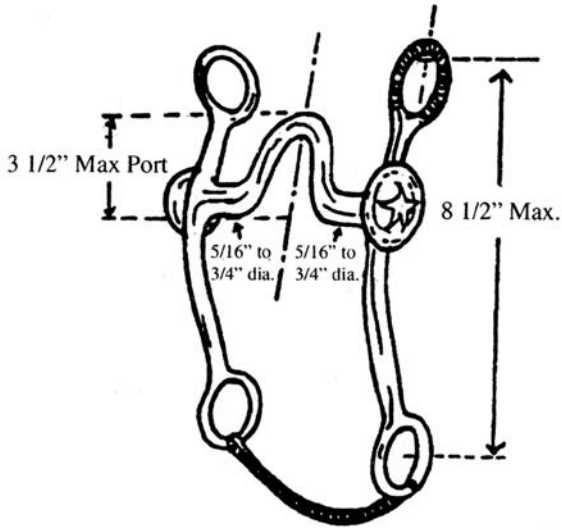

Legal Bit

Some Acceptable Curb Chains

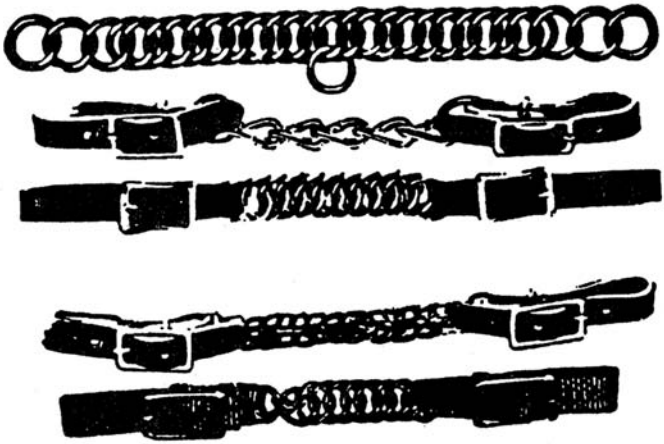

4. Showmanship and Grooming

4.1. Classes

A. Class 101 – Junior members
B. Class 102 – Junior high members
C. Class 103 – Senior members

4.2. Horses and ponies are to be shown in hand at halter or bridle and will be judged according to the 4-H Horse Project Showmanship and Grooming Score Card.

5. Western Halter Mares

5.1. Classes

A. Class 104 – Mares (5 years and under)
B. Class 105 – Mares (6 years and over)

5.2. To be shown in hand at halter or bridle with natural or roached mane. To be judged on conformation, soundness and condition.
5.3. Each entry will be shown individually at the walk and trot. Shown by age of horse, not age or grade of exhibitor.

6. Western Halter Geldings

6.1. Classes

A. Class 106 – Geldings (5 years and under)
B. Class 107 – Geldings (6 years and over)

6.2. To be shown in hand at halter or bridle with natural or roached mane. To be judged on conformation, soundness and condition.
6.3. Each entry will be shown individually at the walk and trot. Shown by age of horse, not by age or grade of exhibitor.

7. Western Halter Ponies

7.1. Class 108 – Mares and Geldings of all ages.
7.2. To be shown in hand at halter or bridle with natural or roached name. To be judged on conformation, soundness and condition.
7.3. Each entry will be shown individually at the walk and trot.

8. Western Pleasure – Horse

8.1. Classes

A. Class 109 – Junior members
B. Class 110 – Junior high members
C. Class 111 – Senior members

8.2. To be judged on the performance and conformation of the horse at the discretion of the judge. To be shown at a walk, jog and lope both ways of the ring on a reasonably loose rein without undue restraint; wrong leads and excessive speed or slowness at all gaits will be penalized. Horses may be asked to extend the jog one direction of the arena. Horses are to be reversed to the inside (away from the rail). Horses may be required to reverse at the walk or jog, but not at the lope. Horse should stand quietly. Each horse in the finals will be asked to back. Where horses are ridden with a curb bit, one hand only must be used. When one hand is used, it is allowable to use the index finger between the reins.

8.3. Junior horses (3-, 4- and 5-year-olds), a snaffle or hackamore/bosal may be used and these are to be ridden with two hands.
8.4. Spurs and chaps are optional. Nose bands and/or tie-downs are prohibited.

9. Western Pleasure – Pony

9.1. Classes

A. Class 112 – Junior members
B. Class 113 – Senior members

9.2. To be judged on the performance and conformation of the pony at the discretion of the judge. To be shown at a walk, jog and lope both ways of the ring on a reasonably loose rein without undue restraint; wrong leads and excessive speed or slowness at all gaits will be penalized. Ponies may be asked to extend the jog one direction of the arena. Ponies are to be reversed to the inside (away from the rail). Ponies may be required to reverse at the walk or jog, but not at the lope. Ponies should stand quietly. Each pony in the finals will be asked to back. Where ponies are ridden with a curb bit, one hand only must be used. When one hand is used, it is allowable to use the index finger between the reins.
9.3. In junior ponies, (3-, 4- and 5-year-olds), a snaffle or bosal may be used and these are to be ridden with two hands. A hackamore/bosal or a curb, snaffle, half-breed or spade bit is permissible.
9.4. Spurs and chaps are optional. Nose bands and/or tie-downs are prohibited.

10. Western Horsemanship

10.1. Classes

A. Class 114 – Junior members
B. Class 115 – Junior high members
C. Class 116 – Senior members

10.2. General horsemanship

A. Riders will be judged on seat, hands and their ability to control and show the horse.
B. Results as shown by performance of the horse are NOT to be considered more important than the method used by the rider.

10.3. Basic position

A. Rider should sit in the center of the saddle with legs under rider, forming a straight vertical line through ear, center of shoulder, center of hip and back of heel.
B. Stirrup length should allow heels to be lower than toes, with a slight bend in knee and the toe directly under knee.
C. Body should always appear comfortable, relaxed and flexible, and back should be nearly flat. Stiff and/or arched lower back should be avoided.
D. Feet may be placed home in the stirrup, with boot heel touching the stirrup, or may be placed with ball of foot

in the stirrup. Riding with toes only in the stirrup will be penalized.

10.4. Hands

A. Both hands and arms shall be held in a relaxed, easy manner, with the shoulders back and down, and upper arm in a straight line with the body, the arm holding the reins bent at the elbow, forming a straight line from the elbow to the horse's mouth.

B. When using a romal, the rider's off-hand shall be around the romal with a least 16 inches of rein between the hands.

C. Wrists are to be kept straight and relaxed, with thumb on top and fingers closed around the reins. One finger between the reins is permitted when using split reins, but not romal. Some movement of the arm is permissible, but excessive pumping will be penalized.

D. Reins are to be carried immediately above or slightly in front of the saddle horn. Only one hand is to be used for reining, and hand shall not be changed. Reins should be carried so as to have light contact with the horse's mouth, and at no time shall reins be carried more than a slight hand movement from the horse's mouth. Excessively loose reins will be penalized. In the event a horse (5 years of age or younger) is shown with snaffle bit or hackamore, it is legal for a rider to show with two hands on the reins.

10.5. Position in motion

A. Rider should sit the trot and not post.

B. At the lope he/she should remain seated.

C. Rider should maintain a vertical position at all gaits.

D. All movements of the horse should be governed by the use of imperceptible aids. Exaggerated shifting of the rider's weight is not desirable. Moving of the lower legs of riders who are short shall not be penalized.

10.6. Mounting and Dismounting

A. To mount, take up the reins in left hand and place hand on withers.

B. Grasp stirrup with right hand and insert left foot in stirrup. Placing right hand on horn, mount.

C. To dismount, rider may either step down or slide down.

D. The size of the rider must be taken into consideration.

10.7. Class routine

A. The judge will ask each rider to work individually. These individual works will be any of the maneuvers the judge feels is necessary to determine the horsemanship ability of the rider.

B. Individual work may be comprised of any of the following:

(1) Walking, jog, trot, lope or gallop in a straight line, curve or circle, or any combination of these gaits and patterns, such as a figure eight, etc.

(2) Stop.

(3) Back.

(4) Turn.
(5) Sidepass.
(6) Simple change of lead through the trot, walk or halt, in a straight line, figure eight or any other pattern.
(7) Flying change of lead in a straight line, figure eight or any other pattern.
(8) Counter canter.
(9) Dismount and mount.
(10) Ride without stirrups.

C. Use of markers helps to standardize patterns and guide riders, but it also increases the degree of difficulty some what. Therefore, marker placement should be carefully planned and indicated in the posted pattern, and the placement in the arena well-supervised.

D. The judge must post the pattern in ample time for each exhibitor to understand the pattern.

E. Judging of individual work will begin at the indication of the judge, and stops at the end of the 30-second time period, indicated by a signal from the ring steward or timer. Exhibitors shall leave the arena at the signal, regardless of whether or not they have completed work prescribed by the judge.

F. Failure to complete the pattern will not be a disqualification but shall be scored accordingly. The judge will use these individual works to determine the top riders to be called back for rail work, and those selected riders will be required to work on the rail. Horses need not be worked both directions on the rail.

11. Reining

11.1. Classes

A. Class 117 – Junior member

B. Class 118 – Senior member

11.2. Any one of the five reining patterns may be used. One of these patterns is to be selected by the judge and used by all contestants in the class. AQHA reining patterns 1, 2, 4, 5 and 7 correspond respectively to reining patterns 1, 2, 3, 4, and 5.

11.3. Each contestant will perform the required pattern individually and separately. To rein a horse is not only to guide but also to control the horse's every movement. The best reined horse should be willingly guided or controlled with little or no apparent resistance and dictated to completely. All deviations from the exact written pattern must be considered a lack of or temporary loss of control and, therefore, faulted according to severity of deviation. Credit will be given for smoothness, finesse, attitude, quickness and authority in performing the various maneuvers while using controlled speed.

11.4. Scoring will be on the basis of 0-100, with 70 denoting an average performance.

A. The following will result in a no score:

(1) Failure to complete pattern as written.
(2) Performing the maneuvers other than in specified order.
(3) The inclusion of maneuvers not specified.
(4) Equipment failure that delays completion of pattern.
(5) Running away or failing to guide where it becomes impossible to discern whether the entry is on pattern.
(6) Jogging in excess of 1/2 circle or 1/2 the length of the arena while starting a circle, circling or exiting a rollback.
(7) Overspins of more than 1/4 turn.
(8) Use of illegal equipment.
(9) Willful abuse of an animal while in show arena.
(10) Using reins or romal as a whip.
(11) More than one finger between reins.
(12) Changing hands.
(13) Two hands on reins, (except with junior horses ridden two-handed in a bosal or snaffle bit).
(14) A rider may untangle excess rein, where excess rein may prevent the rider from continuing the pattern and where the excess can be straightened without affecting the performance of the horse, during hesitations or when settling a horse. Rider's free hand may be used to hold pommel in the normal fashion.

B. The following will result in reduction of five points:
(1) Spurring in front of cinch.
(2) Use of free hand to instill fear.
(3) Holding saddle or touching horse with free hand.
(4) On walk-in patterns, failure to stop or walk before executing a canter departure.
(5) On run-in patterns, failure to be in a canter prior to the first marker.

C. The following will result in a reduction of two points:
(1) Failure to go beyond markers on stops or rollbacks.
(2) Break of gait (the break of gait penalty will not be applied in the canter departure when starting a circle maneuver for the first 1/4 of a circle).
(3) Freeze up in spins or rollbacks.

D. Starting circles or eights-out-of-lead, delayed change of lead or eights-out-of-lead will be judged as follows:
(1) Delayed change of lead by one stride will be penalized one-half point.
(2) From start to 1/4 circle, deduct one point.
(3) From start to 1/2 circle, deduct two points.
(4) From start to 3/4 circle, deduct three points.
(5) For the complete circle, deduct four points.

E. Deduct one-half point for starting circle at a jog or exciting rollbacks at a jog up to two strides. Jogging beyond two strides, but less than 1/2 circle or 1/2 the length of the arena, deduct two points.

F. Deduct one-half point for over or under spinning up to 1/8

of a turn; deduct one point for over or under spinning up to 1/4 of a turn.

G. Where a change of lead is specified immediately prior to a run to the end of the pen, failure to change lead will be penalized as follows:
   (1) One point if lead is picked up within two strides.
   (2) Two points if lead is corrected prior to the stop.
   (3) Three points if lead is not corrected.

H. A judge may require any contestant to repeat the performance of any or all of the various parts of the pattern.

I. Faults against the horse (to be scored accordingly, but not cause disqualification) are as follows:
   (1) Opening mouth excessively (when wearing bit).
   (2) Excessive jawing, open mouth or head raising on stop.
   (3) Breaking gaits.
   (4) Lack of smooth, straight, stop on haunches (bouncing or sideways stop).
   (5) Refusing to change leads.
   (6) Anticipating signals.
   (7) Stumbling or falling.
   (8) Backing sideways.
   (9) Knocking over markers.

J. Faults against the rider (to be scored accordingly, but not to cause disqualification) are as follows:
   (1) Losing stirrup or holding on.
   (2) Any unnecessary aid given by the rider (such as unnecessary talking, petting, spurring, quirting, jerking of reins, etc.).
   (3) Failure to run circles or eights within the markers is not considered a fault depending on arena conditions and size; however, failure to go beyond markers on roll backs and stops is considered a fault.

K. Where horses are ridden with a curb bit, only one hand must be used. When one hand is used, it is allowable to use the index finger between the reins. In junior horses (3-, 4- and 5-year-olds), a snaffle or hackamore/bosal may be used and these are ridden with two hands.

Reining Pattern 1

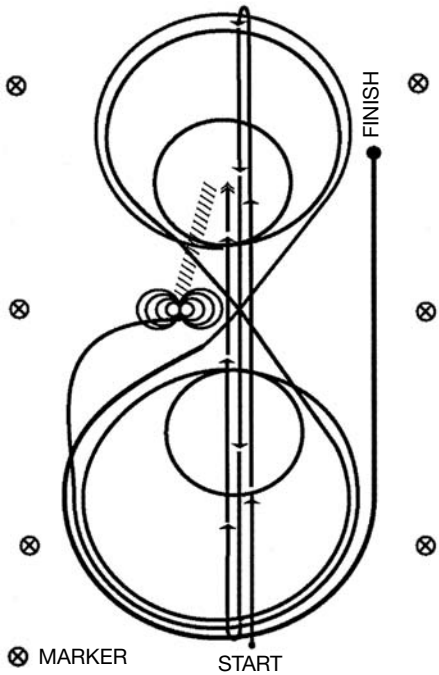

1. Run at speed to the far end of the arena past the end marker and do a left rollback no hesitation.
2. Run to the opposite end of the arena past the end marker and do a right rollback no hesitation.
3. Run past the center marker and do a sliding stop. Back up to center of the arena or at least 10 feet (3 meters). Hesitate.
4. Complete four spins to the right.
5. Complete four and one-quarter spins to the left so the horse is facing the left wall or fence. Hesitate.
6. Beginning on the left lead, complete three circles to the left: the first circle large and fast; the second circle small and slow; the third circle large and fast. Change leads at the center of the arena.
7. Complete three circles to the right: the first circle large and fast; the second circle small and slow; the third circle large and fast. Change leads at the center of the arena.
8. Begin a large fast circle to the left but do not close this circle. Run straight up the right side of the arena past the center marker and do a sliding stop at least 20 feet (6 meters) from the wall or fence. Hesitate to demonstrate the completion of the pattern.

Rider may drop bridle to the designated judge.

Reining Pattern 2

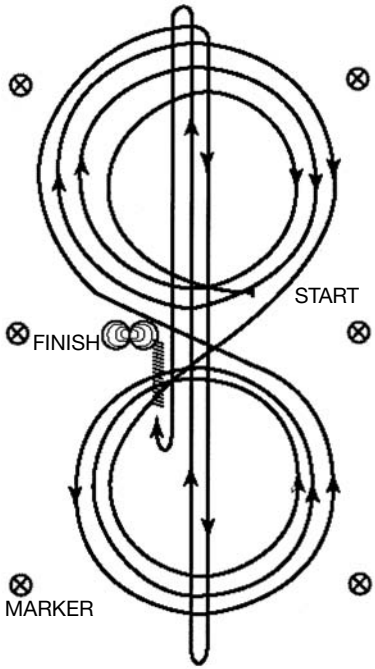

Beginning at the center of the arena facing the left wall or fence:

1. Beginning on the right lead, complete three circles to the right: the first circle small and slow; the next two circles large and fast. Change leads at the center of the arena.
2. Complete three circles to the left: the first circle small and slow; the next two circles large and fast. Change leads at the center of the arena.
3. Continue around previous circle to the right. At the top of the circle, run down the middle to the far end of the arena past the end marker and do a right rollback no hesitation.
4. Run up the middle to the opposite end of the arena past the end marker and do a left rollback no hesitation.
5. Run past the center marker and do a sliding stop. Back up to the center of the arena or at least 10 feet (3 meters). Hesitate.
6. Complete four spins to the right.
7. Complete four spins to the left. Hesitate to demonstrate the completion of the pattern.

Rider may drop bridle to the designated judge.

Reining Pattern 3

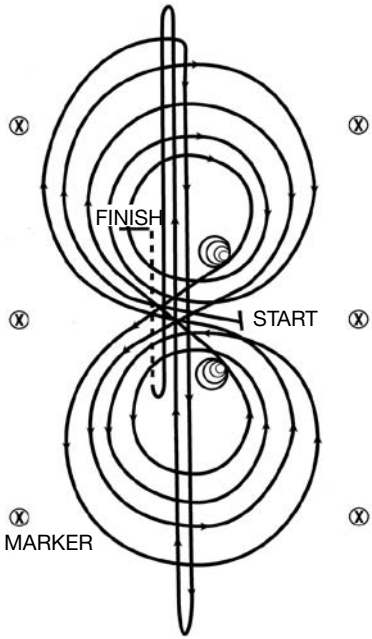

Beginning at the center of the arena facing the left wall or fence:

1. Beginning on the right lead, complete three circles to the right: the first two circles large and fast; the third circle small and slow. Stop at the center of the arena.
2. Complete four spins to the right. Hesitate.
3. Beginning on the left lead, complete three circles to the left: the first two circles large and fast; the third circle small and slow. Stop at the center of the arena.
4. Complete four spins to the left. Hesitate.
5. Beginning on the right lead, run a large fast circle to the right, change leads at the center of the arena, run a large fast circle to the left and change leads at the center of the arena.
6. Continue around previous circle to the right. At the top of the circle, run down the middle to the far end of the arena past the end marker and do a right rollback no hesitation.
7. Run up the middle to the opposite end of the arena past the end marker and do a left rollback no hesitation.
8. Run past the center marker and do a sliding stop. Back up to the center of the arena or at least 10 feet (3 meters). Hesitate to demonstrate completion of the pattern.

Rider may drop bridle to the designated judge.

Reining Pattern 4

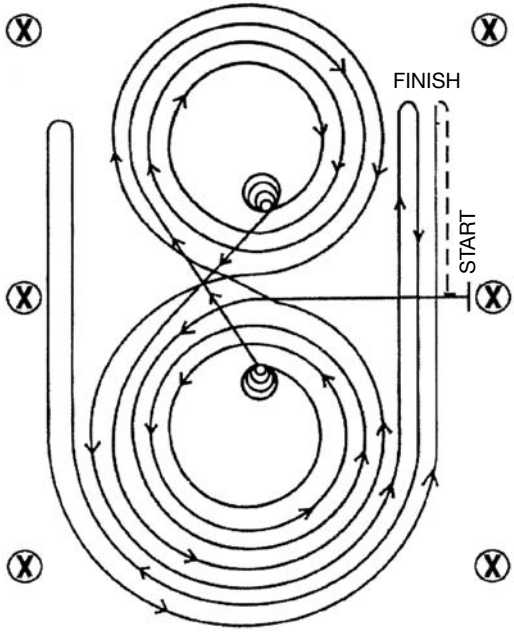

Beginning at the center of the arena facing the left wall or fence:

1. Beginning on the left lead, complete three circles to the left: the first two circles large and fast; the third circle small and slow. Stop at the center of the arena.
2. Complete four spins to the left. Hesitate.
3. Beginning on the right lead, complete three circles to the right: the first two circles large and fast; the third circle small and slow. Stop at the center of the arena.
4. Complete four spins to the right. Hesitate.
5. Beginning on the left lead, run a large fast circle to the left, change leads at the center of the arena, run a large fast circle to the right and change leads at the center of the arena. (Figure 8)
6. Continue around previous circle to the left but do not close this circle. Run up the right side of the arena past the center marker and do a right rollback at least 20 feet (6 meters) from the wall or fence no hesitation.
7. Continue around previous circle but do not close this circle. Run up the left side of the arena past the center marker and do a left rollback at least 20 feet (6 meters) from the wall or fence no hesitation.
8. Continue back around previous circle but do not close this circle. Run up the right side of the arena past the center marker and do a sliding stop at least 20 feet (6 meters) from the wall or fence. Back up at least 10 feet (3 meters). Hesitate to demonstrate completion of the pattern.

Rider may drop bridle to the designated judge.

Reining Pattern 5

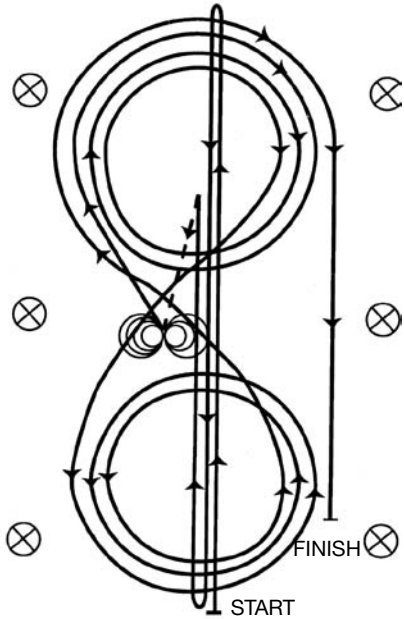

1. Run at speed to the far end of the arena past the end marker and do a left rollback no hesitation.
2. Run to the opposite end of the arena past the end marker and do a right rollback no hesitation.
3. Run past the center marker and do a sliding stop. Back up to the center of the arena or at least 10 feet (3 meters). Hesitate.
4. Complete four spins to the right.
5. Complete four and one-quarter spins to the left so the horse is facing the left wall or fence. Hesitate.
6. Beginning on the right lead, complete three circles to the right: the first two circles large and fast; the third circle small and slow. Change leads at the center of the arena.
7. Complete three circles to the left: the first two circles large and fast; the third circle small and slow. Change leads at the center of the arena.
8. Begin a large fast circle to the right but do not close this circle. Run straight down the right side of the arena past the center marker and do a sliding stop at least 20 feet (6 meters) from the wall or fence. Hesitate to demonstrate completion of the pattern.

Rider may drop bridle to the designated judge.

12. Barrel Racing

12.1 Classes

A. Class 119 – Junior members – Horse
B. Class 120 – Junior high members – Horse
C. Class 121 – Senior members – Horse
D. Class 122 – Junior members – Pony
E. Class 123 – Senior members – Pony

12.2. The course must be measured exactly. If the course is too large for the available space, the pattern should be reduced five yards at a time until the pattern fits the arena. Remember to leave adequate space between barrels and any obstacle. The distance from barrel number three to the finish line need not be reduced five yards at a time, if there is sufficient room for the horse to stop. Brightly colored 55-gallon steel drums with both ends in must be used. There shall be no rubber or plastic barrels or barrel pads used.

12.3. When measuring the area for the barrel course, remember to leave ample room for horses to complete their turns and stop at the finish. It is recommended that there be at least 45 feet from the starting line to the end of the arena, at least 18 feet from barrels one and two to the fence and 36 feet from barrel three to the end of the arena.

12.4. Starting line markers or electric timers shall be placed, where possible, against the arena fence. Electric timer or at least two watches shall be used, with the time indicated by the electric timer or average time of the watches used by official timers to be the official time. Barrel racing is a timed event.

12.5. The contestant is allowed a running start. Timing shall begin as soon as the horse's nose reaches the starting line and will be stopped when the horse's nose passes over the finish line.

12.6. At a signal from the starter, the contestant will run to barrel number one, pass to the left of it and complete an approximately 360 degree turn around it; then go to barrel number two, pass to the right of it, and complete a slightly more than 360 degree turn around it; then go to barrel number three, pass to the right of it, and do another approximately 360 degree turn around it; and then sprint to the finish line, passing between barrels number one and two. For example, the contestants will start to barrel number two, turning to left around this barrel, then to barrel number one, turning to the right, then to barrel number three, turning again to the right, followed by the final sprint to the finish line.

12.7. Knocking over a barrel shall carry a five-second penalty. Failure to follow the course shall cause disqualification. A contestant may touch the barrel with his or her hands in barrel racing. Any contestant who goes on the wrong side of a barrel past the point of the horse's shoulder, runs on the outside of barrel one or two toward the finish line from barrel three or adds an additional 360-degree turn other than those specified shall be disqualified.

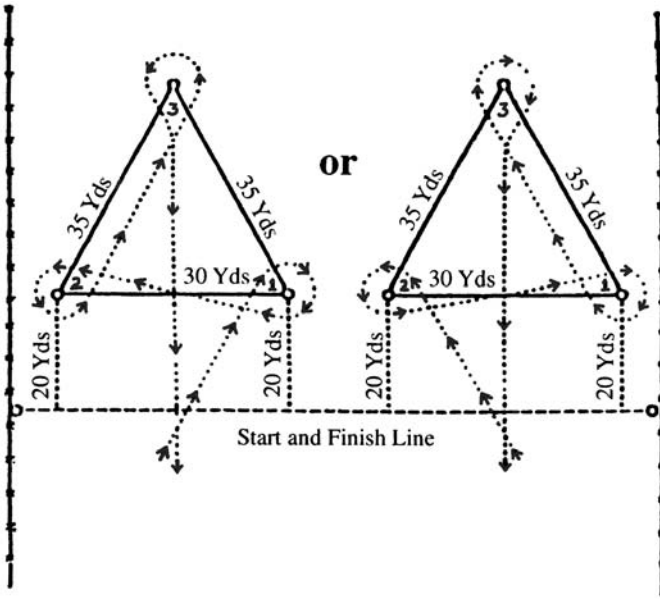

12.8. The judge, at his or her discretion, may disqualify a contestant for excessive use of a bat, crop, whip or rope in front of the cinch.

12.9. In the event of a tie, the horse declared the winner in the runoff must re-run the pattern within two seconds of its original time or the runoff must be held again. Penalty time will not apply to the two-second rule but will apply to the final runoff time.

12.10. Contestants must wear protective head gear with a chin strap properly fastened.

12.11. A contestant can not be assisted by anyone inside the arena; such action shall result in disqualification. Once a contestant breaks the “starting line” timer, that contestant MUST continue without a restart.

13. Pole Bending

13.1. Classes

A. Class 124 – Junior members – Horse
B. Class 125 – Junior high members – Horse
C. Class 126 – Senior members – Horse
D. Class 127 – Junior members – Pony
E. Class 128 – Senior members – Pony

13.2. Pole bending is a timed event. Each contestant will begin from a running start, and time shall begin and end as the horse's nose crosses the line. (A clearly visible starting line shall be provided). An electric timer or at least two watches shall be used, with the time indicated by the electric timer or the average time of the watches used by official timers to be the official time.

13.3. The pole bending pattern is to be run around six poles. Poles are to be 21 feet apart, and the first pole is to be 21 feet from the starting line. Poles shall be set on top of the ground, 6 feet in height, with no base more than 14 inches in diameter.

13.4. A horse may start either to the right or to the left of the first pole and then run the remainder of the pattern accordingly (see pattern). Any contestant going by a pole on the wrong side as far as the shoulder point of the horse shall be considered off course, even if the horse is corrected and continues properly.

13.5. Knocking over a pole shall carry a five-second penalty. Failure to follow the course shall cause disqualification. A contestant may touch a pole with his or her hand in pole bending.

13.6. The judge, at his/her discretion, may disqualify a contestant for excessive use of a bat, crop, whip or rope in front of the cinch.

13.7. In the event of a tie, the horse declared the winner in the runoff must re-run the pattern within two seconds of its original time or the runoff must be held again. Penalty time will not apply to the two-second rule, but will apply to the final runoff time.

13.8. Contestants must wear protective headgear with a chin strap properly fastened.

13.9. A contestant can not be assisted by anyone inside the area; such actions shall result in disqualification. Once a contestant breaks the "starting line" timer, that contestant MUST continue without a restart.

14. Breakaway Roping

14.1. Classes

A. Class 129 – Junior members
B. Class 130 – Senior members

14.2. Breakaway roping is a timed event and must be completed within one minute or a no time will be given. Common rodeo conditions and standards of calf roping apply in this contest, except the roper does not dismount or tie the calf. The roper must throw the first loop within 30 SECONDS or retire from the arena with a no score.

14.3. The horse must start from behind a barrier. The length of

Pole Bending Pattern

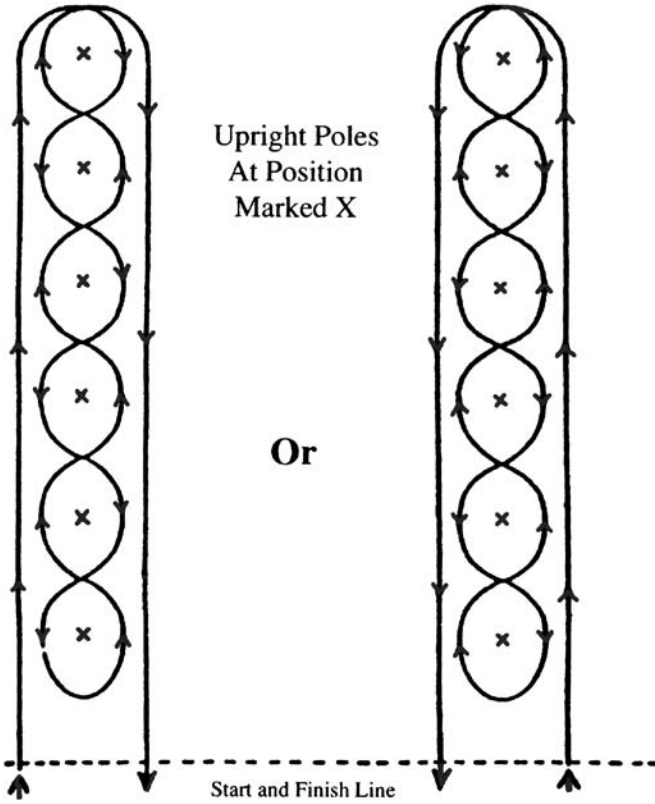

the score line will be adjusted to fit arena conditions and shall not exceed one foot per 20 feet of arena length.

14.4. A barrier judge will be designated before the contest. If the horse breaks the barrier as a result of starting too soon, the roper will receive a 10-second penalty. If the horse breaks the barrier as a result of failure of the barrier equipment, no penalty will be assessed. If the calf carries part of the barrier with it or if the roper is fouled by the barrier, the roper will be given a rerun if he/she declares himself immediately. Once the calf is roped, no rerun will be given. Decisions of the barrier judge are final.

14.5. A regular rope is tied to the saddle horn or swell with a breakable string. Time starts at signal of the barrier flag and stops when the official signals with a flag that the rope breaks away from the saddle as a result of a legal catch.

14.6. A legal catch is defined as a loop that goes over the calf's head and draws up on any part of the body causing the rope to break from the saddle horn.

14.7. Judges will rule whether a catch is legal and whether the

rope breaks away as a result of a legal catch or as a result of the horse or calf stepping on the rope or similar occurrence. Contestant will be given a no time when something other than a legal catch caused the rope to break away.

14.8. A piece of white cloth shall be attached to the rope at the saddle horn to signal when the rope breaks away.

14.9. There is a one-minute time limit.

14.10. Should the roper desire to throw a second loop, a second loop must be built. If a roper misses with two loops, the roper must retire with a no time.

14.11. A roper may have assistance in the box.

15. Calf Roping

15.1. Classes

A. Class 131 – Junior members

B. Class 132 – Senior members

15.2. Contest must have two judges – a field judge to flag finish of a run and a barrier judge. Calf roping is a timed event and must be completed within one minute or a no time will be given. The roper must throw the first loop within 30 SECONDS or retire from the arena with a no score.

15.3. Contestant must catch calf, dismount, go down the rope, throw the calf by hand, cross and tie any three legs.

15.4. If a calf is down when roper reaches it, calf must be raised off of ground (daylight between calf and ground) and rethrown. If roper's hand is on calf when calf falls, calf is considered thrown by hand. Rope must stay on calf until roper gets hand on calf. Tie must be finished with half hitch or "hooey."

15.5. Tie must hold for five seconds after roper gives slack to calf (after remounting) and then must be passed on by the field judge. Roper will be disqualified if he/she touches calf after he/she signals the finish of a tie. No person may touch the calf until the field judge evaluates the tie.

15.6. Any catch on any part of calf with rope will be considered legal.

15.7. A barrier must be used with a minimum of 4 feet from the score line. Score line shall not exceed one foot per 20 feet of arena length.

15.8. If barrier is broken in any place other than designated place or if ring does not fall within 8 feet of post, barrier will not be considered broken.

15.9. If any part of barrier fails to work and such failure results in disadvantage to roper, roper may request calf over, at discretion of barrier judge, if he/she declares immediately. Once calf is roped, no roper will receive calf over because of equipment failure.

15.10. If flag equipment signaling start of time fails to work, roper must run calf over, regardless of events of first run.

15.11. A flag to signal start of time must be put on jerk line in close location to portion of line going around calf's neck.

15.12. Barrier equipment must be inspected by the judge before each contestant competes and replaced if faulty.
15.13. A 10-second penalty will be added to the roper's time for beating or breaking the barrier.
15.14. Calves shall be uniform in height, weight and age. It is recommended that calves not weigh less than 180 pounds. Judges and officials will eliminate any uneven calves. All calves should have been run and tied down at least once before the contest begins.
15.15. Calves will either be drawn or gate cut, depending upon available facilities. If a calf drawn for a roper becomes sick or injured, another calf will be drawn by the judges for that roper.
15.16. Roper must be ready to rope when indicated by show official or calf will be turned out.
15.17. Calves may be roped more than once in a go-round. When so doing, numbers drawn must indicate whether contestant competes in first or subsequent run-through.
15.18. The same person must open the gate and tail the calves for all contestants in a go-round.
15.19. At the discretion of the judges, inexperienced ropers may ask for assistance in calming a nervous horse in the starting box.
15.20. Two loops will be permitted in a limit of one minute. The roper must throw the first loop within 30 SECONDS or retire from the arena with a no score. Should the roper desire to throw a second loop, a second rope must be built. If a roper misses with two loops, the roper must retire with a no time.
15.21. Contestant must adjust rope and reins in a manner that will prevent the horse from dragging the calf. If a horse drags a calf, judges may stop the horse and roper may be disqualified.
15.22. If a tie comes loose or the calf gets to its feet before the tie has been examined and ruled a fair one, roper will receive a no time.
15.23. If a contestant is given the wrong calf, contestant will compete on calf drawn for him/her and time on incorrect calf will be disregarded.
15.24. If a calf gets out of the arena, timers will stop the watches when flagman signals and roper will get the same calf back. Roper will be given lap-and-tap start with time expired when calf got out added to this time.
15.25. Types of bridles or other equipment used are optional choices of the contestant; however, officials may prohibit use of any equipment they may consider excessively severe.
15.26. A roper may have assistance in the box.

16. Team Roping

16.1. Classes

A. Class 133 – Junior and senior members – Heading
B. Class 134 – Junior and senior members – Heeling

16.2. Team members must be from the same district and may show once as the header and once as the heeler. Although two separate class numbers are shown, only one set of awards will be given.

16.3. The headers will start from behind a barrier. Each contestant will be allowed to carry only one rope. Only three loops per team will be allowed. Roping steers without turning loose of the loop will be considered a no catch.
16.4. Roper must dally (at least once around saddle horn) to stop steer. No tied ropes allowed.
16.5. Time starts when header leaves chute and will be stopped when steer is roped and both horses are facing steer in line with ropes dallied and tight. Horse's front feet must be on the ground and ropers must be mounted when time is stopped. Steer must be standing up when roped by header or heeler. Team roping run must be completed within ONE MINUTE. The roper must throw the first loop within 30 SECONDS or retire from the arena with a no score.
16.6. If a heel loop is thrown before the header has dallied and changed the direction of a steer, the teams will be disqualified.
16.7. A broken rope or dropped rope will be considered a no time, regardless whatever time has been taken or not.
16.8. If a steer is roped by one horn, roper is not allowed to ride up and put rope over other horn or head with his/her hands. If the heeler ropes a front foot or feet in the heel loop, this is an illegal catch. Neither contestant may remove the front foot or feet from the loop by hand. However, should the front foot or feet come out of the heel loop naturally by the time the field judge drops the flag, the time will be counted.
16.9. In case the field judge flags out a team that still legally has one or more loops coming, the judge may give the same steer back lap-and-tap and a 10-second penalty will be assessed for each loop already thrown.
16.10. The following constitute legal catches:

A. Head
   (1) Around both horns.
   (2) Half a head
   (3) Around the neck
B. Heel
   (1) Any heel catch behind both shoulders is legal if rope goes up heels.
   (2) One hind foot receives five-second penalty. (Hondo passes over one horn and loop over the other, catch is illegal. If loop crosses itself [Figure 8] in a head catch, it is illegal).

16.11. A roper may have assistance in the box.

17. Team Penning

17.1. Class 135 – Junior and/or senior members
17.2. Within a 60-second time limit, a team of a minimum of three or a maximum of four contestants FROM THE SAME COUNTY must cut out from the herd and pen one head of cattle with the assigned identity number or colored neck band. The numbers or colors and working order will be drawn by the judge and show

management before the start of the contest. The fastest time wins. A warning must be given the team working the cattle at 30 seconds prior to a final time being called. In the event a warning is not given, a rerun may be given at the request of the team.

17.3. The cattle will be bunched on the cattle side of the starting line before the time begins. The line flagman will raise the flag to signal when arena is ready. Contestants will be given their cattle penning number or color of neck band when the line flagman drops his/her flag as the nose of the first horse crosses the starting line. Riders are committed once they enter the arena. Any delay will be a disqualification.

17.4. To call for time, one rider must stand in the gate and raise a hand for the flag. Flag will drop when the nose of the first horse enters the gate and the rider calls for time. It is not a disqualification for more than one rider to enter the cattle pen. All undesignated cattle must be completely on cattle side of starting line.

17.5. A team calling for time with any wrong numbered or colored neck-banded cattle in the pen will be judged a no time.

17.6. Contact with cattle by hands, hats, ropes, bats, romal or any other equipment is a disqualification. A team exhibiting any unnecessary roughness will be judged a no time. No hazing with whips, hats or ropes allowed. Romals or reins may be swung or popped on chaps.

17.7. Fall of horse and/or rider shall not eliminate the entry; however, any attempt by a dismounted rider to work cattle before remounting will result in an automatic disqualification.

17.8. Once committed to the cattle, the team is completely responsible for its animal. It is the team's responsibility before working the cattle to pull up and call for a judge's decision if, in the team members' opinion, they have an injured or unusable animal. Once the cattle are worked, no excuses are accepted. If an animal leaves the arena, either over or through the fence, the team can either be disqualified for unnecessary roughness, or can be given a rerun, depending on the judge's decision. If a rerun is given, it must be given at the end. If no fresh cattle are available for reruns, the cattle to be used will be determined by the show management and judge. If more than one rerun is given in any go-round, they will be taken in order of occurrence. If cattle are to be re-used and additional fresh cattle are needed, the used cattle must be mixed with the fresh cattle and re-numbered or color banded. Every attempt must be made to insure each team work the same number of used and fresh cattle.

17.9. A team will be disqualified by the judge for any action he/she feels to be unnecessary roughness to the cattle or horses, or unsportsmanlike conduct.

17.10. If five or more head are across the starting line at any one time, that team will be judged a no time.

17.11. In the event of a tie affecting the placings, each team will be allowed to pen one numbered or color-banded animal. Fastest time breaks the tie.

17.12. There shall be two flagmen, one at the entrance to the pen and one at the start/foul line. The judge must be located at the start/foul line and may or may not actually flag the contest at his/her discretion. There shall be at least two timekeepers. The first timer shall be the official time; the second timer shall be the back-up time, in the event the first timer misses the time or his/her watch fails. The starting and foul line must be designated by markers located on the arena fence and easily viewed by the line judge and the exhibitors.

17.13. Additional information for team penning

A. Must wear protective helmets.

B. Must attend information/instructional session if requested before the beginning of the state team penning.

C. Herd holders will be provided for each team.

D. Excessive running or abuse of cattle will result in immediate dismissal from the ring and will receive a no time.

E. Any team members acting in a manner that presents a safety risk to themselves, their horses, or the cattle will be dismissed immediately from the ring and will receive a no time.

18. Trail Class for All Divisions

18.1. Classes

A. Class 136, 233, 337, 417, 519 – Junior members

B. Class 137, 234, 337, 417, 519 – Junior high members

C. Class 138, 235, 338, 418, 520 – Senior members

18.2. This class will be judged on the perfor-mance of the horse over obstacles, with emphasis on manners, response to the rider and attitude. Horse shall be penalized for any unnecessary delay while approaching the obstacles.

A. Credit will be given to those horses negotiating the obstacles with style and some degree of speed, providing carefulness is not sacrificed. Credit will be given to horses showing capability of picking their own way through course when obstacles warrant it and willingly responding to rider's cues on more difficult obstacles.

B. Horses with artificial appearance over obstacles should be penalized, as should exaggerated standing in stirrups and leaning forward over horse's neck by rider.

C. Six obstacles should be used. Gait between obstacles shall be at the discretion of the judge(s). Failure to follow course shall cause disqualification. Failure to complete obstacle shall not be a disqualification but is to be severely penalized. Three refusals or a maximum of one minute at an obstacle will result in a zero score for that obstacle. The course shall be reset as original after each horse has worked.

D. The judge(s) will determine placing.

18.3. Obstacles

The following is a list of obstacles that may be used in the trail class. However, additional obstacles may be required by the judge or show management that will test the horse's ability to perform over trail obstacles.

A. Opening, passing through and closing a gate. (Changing hands on gate or turning loose of a gate is to be penalized.)

B. Ride over at least four poles, these being placed a minimum of 15 inches apart. The space between poles is measured. These can be in a straight line, curved, zigzagged, raised or combined with a trot or lope over (trot overs: 3' to 3'6" apart, lope overs: 6 to 7 feet apart).

C. Ride over wooden bridge. (Suggested minimum width shall be 36 inches wide and at least 6 feet long.)

D. Water hazard (ditch or small pond). No metal or slick bottom boxes will be used.

E. Carry object from part of arena to another. (Only objects that reasonably might be carried on a trail ride may be used.)

F. Back horse through "L"-shaped course:

(1) on the ground: 28 inches minimum (space between poles).

(2) elevated: 30 inches minimum (space between poles.)

G. Put on and remove slicker.

H. Remove and replace materials from mailbox.

I. Side pass left or right.

J. Back through and around three markers set either in a triangle or line.

K. An obstacle consisting of four logs or rails, each 5 to 6 feet long, laid in a square. Each contestant will enter the square by stepping over log or rail at designated side. When all four feet are inside the square, rider will execute a 360-degree turn (right or left), pause and depart by stepping over log or rail immediately opposite side of entry.

18.4. All trail classes will be judged according to AQHA judging standards.

Hunter Division

1. Attire

1.1. 4-H members should wear coats of a conservative color, breeches (or jodhpurs), boots or jodhpur shoes, and a dark blue, black or brown hunting cap.

1.2. In excessively hot weather, with approval of the judge, hunt coats may be removed.

1.3. 4-H members must wear an approved helmet (i.e., ASTM/SEI) and chin strap (harness) in all over fence classes. Both helmet and harness must fit properly.

2. Equipment

2.1. In all classes, an English snaffle (no shank), pelham (with two reins), kimberwick and/or a full bridle, all with cavesson nosebands and plain leather brow bands, must be used.

2.2. Saddles must be of black and/or brown colors and of the hunting or forward seat type, and may have an insert on the skirt.

2.3. Saddle pads to be of the classic style, composition and color. Style may be either classic or easy-view with additional area designated for exhibitor number.

2.4. Optional equipment may consist of the following:

A. Spurs of the unrowelled type
B. Crops or bats
C. Gloves
D. English breast plate
E. Braiding of mane and/or tail in hunt style
F. Standing or running martingales in any over-fence class EXCEPT HUNTER HACK.
G. Boots and leg wraps may be used in equitation over fences.

2.5. Prohibited equipment includes the following:

A. Draw reins
B. Rowelled spurs
C. Standing or running martingales EXCEPT IN THE WORKING HUNTER and EQUITATION OVER FENCE CLASSES.
D. Boots of any description EXCEPT IN EQUITATION OVER FENCES AND OUTDOORS DURING INCLEMENT WEATHER IN WORKING HUNTER

3. Showmanship and Grooming

3.1. Classes

A. Class 201 – Junior members
B. Class 202 – Junior high members
C. Class 203 – Senior members

3.2. Horses and ponies are to be shown in hand at halter or bridle. They will be judged according to the 4-H Horse Project Showmanship and Grooming Score Card.

4. Hunter Mares

4.1. Classes

A. Class 204 – Mares (5 years and under)

B. Class 205 – Mares (6 years and over)

4.2. Mares to be shown in hand at halter or bridle. To be judged on conformation, soundness and condition.

4.3. Each entry will be shown individually at the walk and trot. Shown by age of horse, not age or grade of exhibitor.

5. Hunter Geldings

5.1. Classes

A. Class 206 – Geldings (5 years and under)

B. Class 207 – Geldings (6 years and over)

5.2. Geldings to be shown in hand at halter or bridle. To be judged on conformation, soundness and condition.

5.3. Each entry will be shown individually at the walk and trot. Shown by age of horse, not age or grade of exhibitor.

6. Hunter Ponies

6.1. Class 208 – Mares and geldings of all ages.

6.2. To be shown in hand at halter or bridle with natural or roached mane. To be judged on conformation, soundness and condition. Each entry will be shown individually at the walk and trot.

7. Hunt Seat Equitation – on Flat

7.1. Classes

A. Class 209 – Junior members

B. Class 210 – Junior high members

C. Class 211 – Senior members

7.2. The rider only is being judged. Rider to show horse at a walk, trot and canter both directions of the ring. Rider will be judged on his/her seat, hands, legs, feet, position, balance and control of mount. Suitability of horse to ride shall be considered. Rider may be asked to perform any of the individual tests following:

A. Back up

B. Gallop and pull up

C. Perform figure eight at trot, demonstrating change of diagonals.

7.3. At left diagonal, rider should be sitting the saddle when left front leg is on the ground; at right diagonal, rider should be sitting the saddle when right front leg is on the ground; when circling clockwise, rider should be on left diagonal.

7.4. Perform figure eight at canter on correct lead, demonstrating simple change of lead. (This is a change whereby the horse is brought back into a walk or trot and restarted into a canter on the opposite lead). Figure eight to be commenced in center of two circles so that one change of lead is shown.

7.5. Riding without stirrups.

7.6. Figure eight at canter on correct lead, demonstrating flying change of lead.

7.7. Change leads down center of ring, demonstrating simple change of lead.
7.8. Execute serpentine at a trot and/or canter on correct lead, half-circles off center of imaginary line where correct diagonal or lead change must be shown.
7.9. Canter on the counter lead. No more than eight horses may counter canter at one time.
7.10. Perform demonstration ride of approximately one minute on own mount. Rider must write down and give to judge beforehand what pattern he/she plans to demonstrate. To be used for close placing of top riders in class.

8. Hunt Seat Equitation – Over Fence

8.1. Classes
A. Class 212 – Junior members
B. Class 213 – Junior high members
C. Class 214 – Senior members
8.2. Height of Fences
A. Small Ponies – 54 inches and under: 2 feet
B. Large Ponies – Over 54 inches and not to exceed 58 inches: 2 feet
C. Horse – Over 14.2 hands 2 feet 6 inches
8.3. The rider only is being judged. Rider will be judged on his/her seat, hands, legs, feet, position, balance and control of mount. Suitability of horses shall be considered. Individual performance shall consist of riding over a course of at least six jumps at the recommended height. Rider shall have the animal under control at all times. Proper use of the hands is very important.

9. Hunter Under Saddle

9.1. Classes
A. Class 215 – Junior members - Pony
B. Class 216 – Senior members - Pony
C. Class 217 – Junior members - Horse
D. Class 218 – Junior high members - Horse
E, Class 219 – Senior members - Horse
9.2. To be shown at walk, trot and canter both ways of the ring on a light rein, but still maintain contact with the horse's mouth. The judge may request any or all horses or ponies to hand gallop in groups up to eight horses. Horses or ponies should perform without undue restraint but should be under control at all times.
9.3. The horse or pony must back easily and stand quietly.
9.4. To be judged 75 percent on manners, performance and way of going; 25 percent on suitability of horse or pony to rider; cleanliness and neatness of rider, horse or pony; and tack.

10. Hunter Hack

10.1. Classes
A. Class 220 – Junior and senior members - Pony
B. Class 221 – Junior members - Horse

C. Class 222 – Junior high members - Horse
D. Class 223 – Senior members - Horse

10.2. To be shown at a walk, trot, and canter both directions of the ring. The judge may ask for a hand gallop, but no more than eight entries to gallop at one time.

10.3. All entries will be required to jump two fences:

A. 2 feet for ponies 54 inches and under.
B. 2 feet for ponies over 54 inches hands but not exceeding 58 inches hands.
C. 2 feet 6 inches for horses.

10.4. Scoring fences shall be done according to Working Hunter rules.

10.5. RUNNING OR STANDING MARTINGALES ARE PROHIBITED.

11. Green Working Hunter – Fences

11.1. Classes

A. Class 224 – Junior and senior members - Pony
B. Class 225 – Junior members - Horse
C. Class 226 – Senior members - Horse

11.2. A green hunter (exhibitor or horse) must only be in its first or second year of showing over fences to be eligible for this class.

11.3. A green hunter will not be eligible to enter the Working or Handy Working Hunter classes (Classes 227, 228, 229, 230, 231 and 232).

11.4. To be shown over course of eight jumps.

A. Small ponies 54 inches and under to jump 2 feet
B. Large ponies over 54 inches but not exceeding 58 inches to jump 2 feet.
C. Horses to jump 2 feet 6 inches.

12. Working Hunter

12.1. Classes

Class 227 – Junior and senior members – Pony
Class 228 – Junior members – Horse
Class 229 – Senior members – Horse

12.2. To be shown over a course of eight jumps. Fences shall simulate obstacles found in the hunting field.

A. Small ponies 54 inches and under to jump 2 feet 6 inches.
B. Large ponies over 54 inches but not exceeding 58 inches to jump 2 feet 6 inches
C. Horses jump to 3 feet.
D. Distances of in-and-outs:
   (1) Small ponies = 22 feet
   (2) Large ponies = 22 feet
   (3) Horses = 24 feet
E. Horses and ponies in these classes cannot enter Green Working Hunter (classes 224, 225 and 226).

12.3. Scoring Working Hunter classes

A. To be judged on manners, way of going and style of jumping. Horses shall be credited with maintaining an event hunting pace that covers the course with free-flowing strides. Preference will be shown to horses with correct jumping style that meet fences squarely, jumping at the center of fence. Judges shall penalize unsafe jumping and bad form over fence, whether touched or untouched, including twisting. Incorrect leads around the ends of the course or cross-cantering shall be penalized, as well as excessive use of crop. In-and-outs (one or two strides) shall be taken in the correct number of strides or be penalized. Any error that endangers the horse and/or its rider, particularly refusals or knockdowns, shall be heavily penalized.

B. Scoring shall be on a basis of 0-100, with an approximate breakdown as follows:

(1) 90-100 – an excellent performer and good mover that jumps the entire course with cadence, balance and style.

(2) 80-89 – a good performer that jumps all fences reasonably well; an excellent performer that commits one or two minor faults.

(3) 70-79 – the average, fair mover that makes no serious faults, but lacks the style, cadence and good balance of the scopier horses; the good performer that makes a few minor faults.

(4) 60-6 – poor movers that make minor mistakes; fair or average movers that have one or two poor fences but no major faults or disobediences.

(5) 50-59 – a horse that commits one major fault, such as a hind knockdown, refusal, trot, cross canter or drops a leg.

(6) 30-49 – a horse that commits two or more major faults, including front knockdowns and refusals, or jumps in a manner that otherwise endangers the horse and/or rider.

(7) 10-29 – a horse that avoids elimination but jumps in such an unsafe and dangerous manner as to preclude a higher score.

12.4. Elimination

A. Third refusal, runout, bolting on course, extra circle, showing an obstacle to a horse or any combination of these.

B. Jumping an obstacle before it is reset.

C. Bolting from ring.

D. Failure to keep proper course.

E. Jumping an obstacle not included on the course.

F. Horse and/or rider falling. Horse is considered to have fallen when shoulder and haunch on the same side touch the ground, or the obstacle and the ground.

12.5. General Information

A. Circling once upon entering the ring and once upon leaving is permissible.

B. After jumping the fence and prior to leaving the arena, the horse shall trot a small circle on a loose rein for soundness.
C. All horses must be serviceably sound. Any horse showing lameness, broken wind or impairment of vision shall be refused an award.
D. Horses shall not be requested to rejump the course.
E. Manners shall be emphasized.
F. When an obstacle is composed of several elements, any disturbance of these elements will be penalized; however, only a reduction in height of the top element shall be considered a knockdown.
G. In cases of broken equipment, the rider may either continue without penalty or stop and correct the difficulty and be penalized the same as any loss of forward impulsion.
H. When an obstacle requires two or more fences (in-and-out), faults committed at each obstacle are considered separately. In case of a refusal or runout at one element, entry may rejump the previous elements.
I. The course must be posted at least one hour before scheduled time of class.
J. Whenever possible, a schooling area should be provided with at least one practice jump.

13. Handy Working Hunters

13.1. Classes
A. Class 230 – Junior and senior members - Pony
B. Class 231 – Junior members - Horse
C. Class 232 – Senior members - Horse

13.2. Fences shall simulate those found in trappy hunting country.

13.3. Horses are required to trot over one fence toward the end of the course and may be asked to lead over one fence.

13.4. Course will consist of eight jumps. Heights of the fences are as follows:
A. Small ponies 54 inches and under – 2 feet 6 inches
B. Large ponies over 54 inches not exceeding 58 inches – 2 feet 6 inches
C. Horses – 3 feet

13.5. Distances of in-and-outs
A. Small ponies = 22 feet
B. Large ponies = 22 feet
C. Horses = 24 feet

13.5. Horses and ponies in these classes can not enter Green Working Hunter (Classes 224, 225 and 226).

14. Trail Horse

14.1. Classes
A. Class 233 – Junior members
B. Class 234 – Junior high members
C. Class 235 – Senior members

14.2. See class description starting on page 35

Walking and Racking Division

Walking Horses and Racking Horses cannot cross enter performances classes except Trail (Class 337 and 338). Walking and Racking Horses show together in showmanship and halter (in-hand) classes.

Walking Horse performance classes: 309, 310, 313, 314, 315, 316, 317, 318, 319, 320, 321, 322, 323, 324, 325, 326, 327 and 328.

Racking Horse performance classes: 311, 312, 329, 330, 331, 332, 333, 334, 335 and 336.

1. Showmanship and Grooming (Walking and Racking)

1.1. Classes

A. Class 301 – Junior members

B. Class 302 – Junior high members

C. Class 303 – Senior members

1.2. Horses and ponies are to be shown in hand at bridle or halter at a walk, running walk/slow rack and pose.

1.3. To be judged according to the 4-H Horse Project Showmanship and Grooming Score Card.

2. Walking and Racking Mares

2.1. Classes

A. Class 304 – Mares (5 years and under)

B. Class 305 – Mares (6 years and over)

2.2. Mares to be shown in hand at bridle or halter.

2.3. To be judged on conformation, soundness and condition. Each entry to be shown individually at the walk and running walk or appropriate gait. Shown by age of horse, not age or grade of exhibitor.

3. Walking and Racking Geldings

3.1. Classes

A. Class 306 – Geldings (5 years and under)

B. Class 307 – Geldings (6 years and over)

3.2. Geldings to be shown in hand at halter or bridle.

3.3. To be judged on conformation, soundness and condition. Every entry to be shown individually at the walk and running walk or appropriate gait.

3.4. Shown by age of horse, not age or grade of exhibitor.

4. Walking and Racking Ponies

4.1. Class 308 – Mares and geldings of all ages.

4.2. To be shown in hand at halter or bridle.

4.3. To be judged on conformation, soundness and condition. Every entry to be shown individually at the walk and running walk or appropriate gait.

5. Qualifying Gaits for Walking Horses

5.1. Flat Walk

A. The flat walk should be true; bold; and four-cornered, with the fore legs moving straight in an elevated arc; and with a pronounced and cadenced head motion.

B. The rear legs should follow through close to the ground, comfortable and over striding the front tracks. Stiff-legged front or rear leg motion and an irregular gait, especially when entering the ring, are typical of the movement of a sore horse. The judge must immediately excuse any horse exhibiting this type of motion from the ring.

5.2. Running Walk

A. The running walk should be the same general motion as the flat walk, but with additional speed.

B. The horse shall exhibit a smooth, gliding, overstepping, four-cornered gait, with greater stride and accelerated head motion.

C. The running walk should be a free and easy gait. Horses exhibiting an exaggerated, hesitating way of going, with a tendency to point with the front feet, are not in form. Twisting of the hocks or stiff-legged rear leg motion shall also be considered a deviation from the true running walk, and a horse exhibiting these ways of going should be penalized.

5.3. Canter

A. The canter should be smooth and straight on both leads, not walking behind, but cantering on both ends with a rolling, rocking chair motion, comfortably in hand.

B. Exaggerated "pumping" of the horse at the canter is not considered good form.

5.4. General Information

A. The Walking Horse should move freely in each gait and proceed in a smooth, fluid, rhythmic manner.

B. At all gaits, the horse should be flexed at the poll with muzzle slightly tucked. Stiff front or rear leg motion; stumbling; bucking knees; lack of rhythmic timing; pointing or favoring a particular leg; the necessity for excessive pumping or bumping of the horse; or any tendency to rack, pace or other deviation from the true walk, are not typical of the breed. The preceding mannerisms are not considered good form and shall be penalized in judging.

6. Shoeing Requirements for Walking Horses

6.1. Lite-Shod Plantation Horse

A. The shoe for the Lite-Shod Plantation Pleasure Horse must be no wider than 3/4 inch and no thicker than 3/8 inch with the exception of the caulk, which must be no thicker than 3/4 inch and the turnback shall not exceed 1 inch.

B. The shoe is not to extend beyond the bulb of the horse's heel when a perpendicular line is drawn from the bulb of the horse's heel to the ground.

C. The use of borium is permitted on the caulks of the pleasure shoes, but the thickness of the shoe and caulk with the borium must not exceed 7/8 inches.

D. The use of hoof bands and welded-on clips IS permitted EXCEPT in Plantation Pleasure classes and Country Pleasure. Clips that are drawn from the shoe itself are permitted.

E. No additional weight shall be allowed on or in the hoof, other than the shoe and nails.

6.2. Heavy-Shod Plantation Horse

A. The plantation shoe must not exceed 1/2 inch in thickness or 1 1/2 inches in width; with no bare plate or other weight inside the shoe. The caulk must not exceed a 1-inch turnback, and the shoe must not extend more than 1/4 inch beyond the hoof at the toe.

B. The heel of the shoe must not extend beyond the bulb of the horse's heel, when a perpendicular line is drawn from the bulb of the horse's heel to the ground.

C. The use of borium is permitted on the caulks of the pleasure shoes, but the thickness of the shoe and caulk with the borium must not exceed 1 1/8 inches. The use of hoof bands and welded-on clips are not permitted on pleasure horses. Clips that are drawn from the shoe itself are permitted.

D. No additional weight shall be allowed on or in the hoof, other than the shoe and nails.

6.3. Lubricants in the pastern area, action devices and artificial appliances are prohibited on the Plantation Pleasure Horses.

7. Attire and Tack

7.1. Proper Walking/Racking attire must be adhered to at all times. However, in excessively hot weather and with the approval of the judge, coats may be removed. FORMAL OR SEMI-FORMAL ATTIRE (i.e., tuxedo shirt and bow tie) should not be worn before 6:00 p.m.

7.2. Typical Walking or Racking Horse equipment and tack should be used at all times. Bit shanks may not exceed 9 1/2 inches in length (English or Western) EXCEPT IN OPEN WALKING PERFORMANCE WHERE BIT LENGTH IS UNRESTRICTED.

8. Walking Seat Equitation

8.1. Classes

A. Class 309 – Junior members

B. Class 310 – Senior members

8.2. Personal Attire

A. The rider of Walking Seat Equitation is to be judged on his/her skill and form on a horse. The horse and rider should be groomed to meticulous perfection. The rider

should exercise good taste right down to the smallest, most minute detail. The rider is required to choose a neat, well-fitted habit with accompanying accessories within the guidelines based on tradition and present-day customs.

B. The two- or three-button saddle suit of a solid conservative color is correct both day and evening. Suggested colors include black, blue, grey, green, beige or brown, with coordinated accessories. Vests may be worn and may either match or contrast with the habit color. Careful attention should be given the fit of the habit. The coat length should be at least 3 inches below the fingertips when standing. The jodhpurs should be long enough to rest on the rider's boot top and the bottom of the boot heel when mounted. Jodhpur underpasses should always be worn. A moderate fullness is better than a suit that fits too snugly.

C. A matching or coordinated homburg or wide-brimmed saddle derby should be worn by girls. Boys should wear a snap-brimmed hat. A four-in hand tie matching or coordinating with the suit color should be worn with a man's style white or pastel shirt. Boots should be of the English type in either calf or patent leather. Gloves should be of the English type in either calf or patent leather. Gloves shall be worn and may match the suit or be off-white. English type spurs (either blunt or small rowel) and a short riding crop are optional.

D. The semi-formal or tuxedo-type one-button coat suit is suitable to be worn at night only. The acceptable colors are dark blue, brown, grey or black, with collar or lapels of the same color. Top hat, dark bow tie, cummerbund, gloves and dark boutonniere complete the outfit.

E. The rider's hair must be neat and well groomed. Girls with long hair should have it styled so the back number can be seen easily.

F. Earrings and bracelets, as well as large rings, do not belong in the show ring; neither do flying hair ribbons, corsages and large flowers. Nothing should detract from the genuine beauty of a well-trained horse and skilled rider.

8.3. Tack

A. Bridles should be of the type commonly used by Walking Horses, with a single pair of reins. Colored brow bands are appropriate; however, rhinestones, etc., are not acceptable. Clean, well-kept bridles and shining silver bits are far more attractive. Martingales or similar tie-downs are prohibited.

B. Saddles should be of the flat, English type and of the correct size for the rider. They should be clean and well-kept with white girth and shining irons. Forward seat or Western saddles are prohibited.

C. Braids should be neatly attached at foretop and mane. Colors should blend well with rider's habit, brow band

and color of horse. Braids should be of the straight plaited variety with no butterflies or other ornamentations.

8.4. Tests from Which Judges Must Choose

A. Enter ring at the flat-walk, turning to right and proceeding in counter clockwise direction. The class shall proceed at least once around the ring at each gait (flat-walk, running-walk and canter) and, on command, reverse and repeat. Riders may reverse mounts either toward or away from the rail. The gesture of stopping, leaning forward in the saddle and feeling of the curb chain is permissible, if necessary, but certainly not desirable and should be avoided.

B. Entries shall line up on command and any or all riders may be required to execute any tests listed. All entries padded or unpadded can participate in equitation classes.

C. Test may be performed either individually or as a group and may be asked for before or after rail work.

D. Test elements include the following:

(1) Pick up reins – A quick check on muscular control and sensitivity of hands.

(2) Backing – Must be required as a check on hands, arms, thighs, knees and lower legs, feet and voice commands.

(3) Dismount and mount – To be done quietly and as gracefully as possible.

(4) Group performance around ring – To check on maneuverability, ring generalship, etiquette and sportsmanship.

(5) Individual performance on rail – Any or all gaits and test may be required, including change of canter leads. See rider in motion from both front and rear at all three walking-horse gaits.

(6) Rider without stirrups – Any or all gaits may be requested.

(7) Change canter leads down center of ring – Change leads, stopping at each change.

(8) Figure eight at canter on correct lead – Full stop required on each change of lead. Pattern to begin at center of two circles so as to work lead change.

(9) Perform demonstration ride of approximately one minute on own mount. Rider must write down and give to judge beforehand what patterns he/she plans to demonstrate. To be used for close placing of top riders in class.

8.5. General Information

A. It should be stressed that the required Equitation Walking Seat is a natural, coordinated and comfortable riding position and should in no way be rigid or exaggerated.

B. A rider should convey the impression of effective and easy control, with the general appearance of being able to ride for a considerable length of time with pleasure.

C. To show a horse well, rider should show himself or herself to the best advantage. Ring generalship shall be taken into consideration by the judge. The appearance, presentation and alertness of the rider and his/her mount make the overall picture of utmost importance.

8.6. Mounting and Dismounting

A. To mount, take up reins in left hand and place hand on withers. Grasp stirrup leather with right hand and insert left foot in stirrup and mount.

B. To dismount, rider may either step down or slide down.

8.7. Hand Positioning

A. The hands should be held in an easy position, waist or elbow high; over pommel, with palms downward and slightly turned toward body; wrist rounded slightly.

B. The hands should be in unison with the horse's mouth, showing adaptability as well as control. How and where the horse carries its head determines the height the hands are held above the horse's withers.

C. Hands and wrists should be flexible and not held extremely separated. (From the rider's view, the hands should be in a "V" shape, close enough for thumbs to touch.) The fingers should be closed over reins, firm but not rigid. Pressure between thumb and index fingers to secure ends. Closed (or crossed) reins shall be used, with both hands on the reins, and the bight of the rein should be on the off-side.

8.8. Basic Position

A. To obtain proper position, rider should sit comfortably in the middle of the saddle and find his/her center of gravity by sitting with a slight bend at the knees, without use of the stirrups. While in this position, have stirrup leathers adjusted to fit so that irons will be under ball of foot with even pressure on entire width of sole and center of iron.

B. The foot position will be natural and comfortable if the knee and thigh are rolled inward and the heel is slightly lower than the toes. From the front or rear view, the lower leg will be held naturally away from the horse, depending on the anatomy of the rider and the size of the horse.

C. The knee should rest against saddle.

8.9. Position in Motion

A. The position in motion should be natural, coordinated and graceful, which is attained only with practice.

B. From the side view a straight line can be drawn perpendicu-lar to the ground through the rider's head, neck, shoulder, hip and ankle.

C. The rider's toe should never be any more forward than his/her knee, thereby keeping his/her center of balance directly above the feet and ankles.

D. Upper arms should fall naturally from the shoulders toward the hip bones, and should be flexible, never clutched to the body, extended forward or spread away from the body.

E. Hands should be in a comfortable waist-level position, depending on how and where the horse carries its head. The use of the hands should be smooth and gradual, without jerking or pumping at any of the gaits, or jerks on the reins parked.

9. Racking Equitation (Saddle Seat)

9.1. Classes

A. Class 311 – Junior members

B. Class 312 – Senior members

9.2. Tests from Which Judges Must Choose

A. Enter ring at the flat walk, turning to right and proceeding in counter-clockwise direction.

B. The class shall proceed at least once around the ring at each gait: slow walk, slow rack and fast rack and, on command, reverse and repeat. Riders may reverse mounts either toward or away from the rail.

C. The gesture of stopping, leaning forward in the saddle and feeling of the curb chain is permissible, if necessary, but certainly not desirable and should be avoided.

D. Entries shall line up on command, and any or all riders may be required to execute any tests listed.

E. Tests may be performed either individually or as a group and may be asked for before or after rail work.

F. Test elements include the following:

(1) Pick up reins – A quick check on muscular control and sensitivity of hands.

(2) Backing – Must be required, as a check on hands, arms, thighs, knees and lower legs, feet and voice commands (four to eight steps).

(3) Dismount and mount – To be done quietly and as gracefully as possible.

(4) Ride without stirrups – Any or all gaits may be requested.

(5) Change gaits downs center of ring in straight line.

(6) Walk and/or rack horses in circle or figure eight.

(7) Perform demonstration ride of approximately one minute on own mount.

(8) Rider must write out and give to judge beforehand what pattern he/she plans to demonstrate. To be used for close placing of top riders in class.

9.3. General Information

A. It should be stressed that the required Equitation Racking Seat is a natural, coordinated and comfortable riding position and should in no way be rigid or exaggerated.

B. A rider should convey the impression of effective and easy control, with the general appearance of being able to ride for a considerable length of time with pleasure.

C. To show a horse well, the rider should show himself or herself to the best advantage. Ring generalship shall be

taken into consideration by the judges. The appearance, presentation and alertness of the rider and his/her mount make the overall picture of utmost importance.

9.4. Mounting and Dismounting

A. To mount, take up reins in left hand and place hand on withers. Grasp stirrup leather with right hand and insert left foot in stirrup and mount.

B. To dismount, rider may either step down or slide down.

9.5. Hand Positioning

A. The hands should be held in an easy position: waist or elbow high, over pommel, with palms downward, slightly turned toward body, with wrist rounded slightly.

B. The hands should be in unison with the horse's mouth, showing adaptability as well as control. How and where the horse carries its head determines the height the hands are held above the horse's withers.

C. Hands and wrists should be flexible and not held extremely separated (from the rider's view the hands should be in a "V" shape, close enough for thumbs to touch). The fingers should be closed over reins, firm but not rigid. Pressure between thumb and index fingers to secure ends.

D. Closed (or crossed) reins shall be used, with both hands on the reins, and the bight of the rein should be on the off-side.

9.6. Basic Position

A. To obtain proper position, the rider should sit comfortably in the middle of the saddle and find his/her center of gravity by sitting with a slight bend at the knees, without use of the stirrups. While in this position, have stirrup leathers adjusted to fit, so that irons will be under the ball of the foot with even pressure on entire width of sole and center of iron.

B. The foot position will be natural and comfortable if the knee and thigh are rolled inward and the heel is slightly lower than the toes.

C. From the front or rear view, the lower leg will be held naturally away from the horse, depending on the anatomy of the rider and the size of the horse.

D. Knee should rest against saddle.

9.7. Position in Motion

A. The position in motion should be natural, coordinated and graceful, which is attained only with practice.

B. From the side view, a straight line can be drawn perpendicular to the ground through the rider's head, neck, shoulder, hip and ankle.

C. The rider's toe should never be any more forward than his/her knee, thereby keeping his/her center of balance directly above the feet and ankles.

D. Upper arms should fall naturally from the shoulders toward the hip bones and should be flexible, never clutched to the body, extended forward or spread away from the body.

E. Hands should be in a comfortable waist-level position, depending on how and where the horse carries its head. The use of the hands should be smooth and gradual, without jerking or pumping at any of the gaits, or jerks on the reins when parked.

9.8. Tack

A. Bridles should be of type commonly used on Racking Horses, with a single pair of reins. Brow bands decorated with rhinestones, etc., do not belong in equitation classes. Clean, well-kept bridles and shining silver bits are far more attractive.

B. Martingales or similar tie-downs are prohibited. Saddles should be of the saddle-seat type and of the correct size for the rider. Forward seat or western saddles are prohibited.

C. Boots may or may not be used. Clean, white boots of proper weight and design should be well fastened before horse enters ring. Boots are not removed during class, as horses are not being judged.

E. All tack should be neat and clean, in good condition and fit correctly on the horse.

9.9. Braiding

A. Neatly attached at forelock and mane.

B. Color should blend well with rider's habit and brow band.

10. Plantation Pleasure Specialty: No Canter - Heavy Shod

10.1. Classes

A. Class 313 – Junior members

B. Class 314 – Senior members

10.2. Horses will be shown at the flat walk and running walk in both directions of the ring.

10.3. The Plantation Pleasure Horse should display brilliance and show presence while performing true-walking gaits.

10.4. Any tendency to rack, pace or trot should be penalized. Form is not to be sacrificed for speed.

10.5. The horse is to be well-mannered and manageable on a light rein. Manners are paramount for a pleasure horse and should be given serious consideration in judging.

10.6. The horse should be well-balanced, both front and rear. The horse must back readily on command and respond to rider signals to perform all gaits without the necessity for bumping and pumping of the reins.

10.7. Horses shown in these classes may not enter corresponding classes 315 or 316, 317 or 318 and 319 or 320.

11. Plantation Pleasure Specialty: No Canter - Lite Shod

11.1. Classes

A. Class 315 – Junior members

B. Class 316 – Senior Members

11.2. Horse will be shown at the flat walk and running walk in both directions of the ring.

11.3. The Lite-Shod Plantation Pleasure Horse should perform the true walking gaits in a relaxed fashion with an alert and willing attitude. Any tendency to pace, rack or trot should be penalized.

11.4. The Lite-Shod Horse should display pleasure qualities necessary for road and trail riding, such as good manners, responsiveness, manageability on a light rein, etc. The horse must stand quietly and back readily on command.

11.5. Horses shown in these classes may not enter corresponding classes 317 or 318 and 319 or 320.

12. Plantation Pleasure: 3 Gait - Heavy Shod

12.1. Classes

A. Class 317 – Junior members

B. Class 318 – Senior members

12.2. Horses are to be shown at the flat walk, running walk and canter in both directions of the ring.

12.3. The Plantation Pleasure Horse should display brilliance and show presence while performing true walking gaits.

12.4. Any tendency to rack, pace or trot should be penalized. Form is not to be sacrificed for speed.

12.5. The horse is to be well-mannered and manageable on a light rein. Manners are paramount for a pleasure horse and should be given serious consideration in judging.

12.6. The horse should be well-balanced, both front and rear. The horse must back readily on command, and respond to rider signals to perform all gaits without the necessity for bumping and pumping of the reins.

12.7. Horses shown in these classes may not enter corresponding classes 313 or 314, 315 or 316 and 319 or 320.

13. Plantation Pleasure: 3 Gait - Lite Shod

13.1. Classes

A. Class 319 – Junior members

B. Class 320 – Senior members

13.2. Horses are to be shown at the flat walk, running walk and canter in both directions of the ring.

13.3. The Lite-Shod Plantation Pleasure Horse should perform the true walking gaits in a relaxed fashion with an alert and willing attitude.

13.4. Any tendency to pace, rack or trot should be penalized.

13.5. The Lite-Shod Horse should display pleasure qualities necessary for road and trail riding, such as good manners,

responsiveness, manageability on a light rein, etc. The horse must stand quietly and back readily on command.

13.6. Horses entered in these classes may not enter corresponding classes 313 or 314 and 315 or 316.

14. Country Pleasure: Speciality

14.1. Classes

A. Class 321 – Junior members

B. Class 322 – Senior members

14.2. This is a two-gaited class. Horses should display a walk and a smooth, easy, comfortable intermediate gait. Excessive speed in the intermediate gait will be penalized.

14.3. Neat attire is acceptable with tack optional.

14.4. Shoeing requirements are the same as for Plantation Pleasure Lite Shod.

14.5. Horses entered in Country Pleasure are only eligible to show in the following classes: Conformation (Halter), Showmanship and Grooming, Walking Seat Equitation and Trail.

15. Open Walking Performance: Speciality

15.1. Classes

A. Class 323 – Junior members

B. Class 324 – Senior members

15.2. This is a two-gaited class for PADDED HORSES only.

15.3. Horses in this class should move freely in each gait and proceed in a smooth, fluid, rhythmic manner. At both gaits – the flat walk and running walk – the horse should be flexed at the poll with muzzle slightly tucked.

15.4. Horses will not be required to back.

15.5. Stiff front or rear leg motion; stumbling; bucking knees; lack of rhythmic timing; pointing or favoring a particular leg; the necessity for excessive bumping of the horse; or any tendency to rack, pace or other deviation from the true walk, are not typical of the breed. The preceding mannerisms are not considered good form and shall be penalized.

15.6. Horse MUST show with pads and may or may not show with action devices, braced tails and boots.

16. Western Pleasure: 3 Gait – Any Regulated Shoe

16.1. Classes

A. Class 325 – Junior members

B. Class 326 – Senior members

16.2. Entry shall reflect suitability of the TWH (Tennessee Walking Horse) as a western working horse, exhibiting qualities suitable for ranch work.

16.3. The western pleasure horse works quietly, exhibiting an exceptionally smooth, comfortable ride. The horse should be semi-collected and ridden with a loose rein. The head set should be natural.

16.4. Reins must be held in one hand and cannot be changed during performance. Hand around reins, one finger between reins is permitted. While the horse is in motion, the rider's hands shall be clear of horse and saddle.
16.5. The judge may call for a halt on the rail to test for quietness. The horse must stand quietly and back readily. (At the discretion of judge or show management, the horse may be asked to back clear of the line-up and do a 360-degree, neck-reined turn to either the right or the left, rider's discretion.)
16.6. The horse should wear a western bridle with no cavesson and bits with shanks not to exceed 9 1/2 inches.
16.7. Western tack and attire including hat, boots and long sleeved shirt are mandatory. Chaps and spurs may be worn at the option of the rider. Australian stock saddles are not permitted.

17. Stock Seat Equitation (Western Horsemanship)

17.1. Classes
- A. Class 327 – Junior members
- B. Class 328 – Senior members

17.2. General Information
- A. Riders will be judged on seat, hands, and the ability to control and show the horse. Results as shown by performance of the horse are NOT to be considered more important than the method used by the rider.
- B. Attire and Tack
  - (1) See Western Division for additional information on tack and attire.
  - (2) Australian stock saddles are not permitted.

17.3. Basic Position
- A. Rider should sit in center of saddle with legs under rider forming a straight vertical line through ear, center of shoulder, center of hip and back of heel.
- B. Stirrup length should allow heels to be lower than toes, with slight bend in knee and toe directly under knee.
- C. Body should always appear comfortable, relaxed and flexible. The back should be nearly flat. Stiff and/or arched lower back should be avoided.
- D. Feet may be placed home in the stirrup, with boot heel touching the stirrup, or may be placed with ball of foot in the stirrup. Riding with toes only in stirrup will be penalized.

17.4. Hand Positioning
- A. Both hands and arms shall be held in a relaxed easy manner, with the shoulders back and down, and upper arm in a straight line with the body.
- B. The arm holding the reins should be bent at the elbow, forming a straight line from the elbow to the horse's mouth.
- C. When using a romal, the rider's off-hand shall be around the romal with a least 16 inches of rein between the hands.

D. Wrists are to be kept straight and relaxed, with thumb on top and fingers closed around the reins. One finger between the reins is permitted when using split reins, but not romal.

E. Some movement of the arm is permissible, but excessive pumping will be penalized.

F. Reins are to be carried immediately above or slightly in front of saddle horn. Only one hand is to be used for reining, and that hand shall not be changed.

G. Reins should be carried so as to have light contact with the horse's mouth and at no time shall reins be carried more than a slight hand movement from the horse's mouth.

H. Excessively loose reins will be penalized.

I. In the event a horse (5 years of age or younger) is shown with snaffle bit or hackamore, it is legal for a rider to show with two hands on the reins.

17.5. Position in Motion

A. At the lope, the rider should remain seated.

B. Rider should maintain a vertical position at all gaits.

C. All movements of horse should be governed by the use of imperceptible aids.

D. Exaggerated shifting of the rider's weight is not desirable.

E. Moving of the lower legs of riders who are short shall not be penalized.

17.6. Mounting and Dismounting

A. To mount, take up the reins in left hand and place hand on withers. Grasp stirrup with right hand and insert left foot in stirrup. Placing right hand on horn, mount.

B. To dismount, rider may either step down or slide down.

C. The size of the rider must be taken into consideration.

17.7. Class Routine

A. The judge will ask each rider to work individually. These individual works will be any of the maneuvers the judge feels are necessary to determine the horsemanship ability of the rider.

B. Individual work may be comprised of any of the following:

(1) Walk, running walk or lope in a straight line, curve or circle, or any combination of these gaits and patterns, such as a figure eight, etc.

(2) Stop

(3) Back

(4) Turn

(5) Sidepass

(6) Simple change of lead through walk, or halt, in a straight line, figure eight or any other pattern

(7) Flying change of lead in a straight line, figure eight or any other pattern

(8) Counter canter

(9) Dismount and mount

(10) Ride without stirrups

17.8. Use of markers helps to standardize patterns and guide riders, but it also increases the degree of difficulty somewhat. Placement should be carefully planned and indicated in the posted pattern, and placement in the arena should be well-supervised.

A. The judge must post the pattern in ample time for each exhibitor to understand the pattern.

B. Judging of individual work will begin at the indication of the judge, and it stops at the end of the 30-second time period, indicated by a signal from the ring steward or timer. Exhibitors shall leave the arena at the signal, regardless of whether or not they have completed work prescribed by the judge.

C. Failure to complete the pattern will not be a disqualification, but shall be scored accordingly.

17.9. The judge will use these individual works to determine the top riders to be called back for rail work, and those selected riders will be required to work on the rail. Horses need not be worked both directions on the rail.

18. Gaits for Racking Horses

The Racking Horse is shown in each of the three natural gaits: the show walk, the slow rack and the fast rack. (Exceptions: Trail Pleasure).

18.1. The SHOW WALK is a smooth, collected, slow and easy gait. It is a distinctive four-beat gait displaying both style and grace. The horse is alert and mounted well in the bridle. The Trail Pleasure Walk is a true walk in which the rider and his/her mount are at complete ease. The rein is light and there is no evidence of any strain on the part of horse or rider.

18.2. The SLOW RACK is a relaxed four-beat gait with both style and action, neither a pace nor a trot. The neck should be arched with the head and ears alert. This gait should be straight and square and in form at all times. The Trail Pleasure Rack is considered to be a true four- beat gait (very smooth). It is recognized as being the ultimate for a pleasure horse, in which ease of riding and comfort are paramount. There is no evidence of strain on the part of the horse or the rider, and the reins are lightly held in two hands. Speed shall not be considered a factor in judging this division.

18.3. The FAST RACK is in the same form as the slow rack, displaying style, speed and action. The fast rack is faster than either of the other gaits, but at no time should the horse sacrifice form for speed.

18.4. In each of the three gaits, the horse must be collected and presented well, and the rider must be relaxed and smooth in the saddle. At no time should the horse display a gait with animated hock action.

18.5. The Racking Horse must exhibit good conformation and be free of blemishes and unsoundness, other than healed permanent-type scars.

18.6. Abusive treatment and/or training techniques to produce an alteration of the gaits shall not be condoned.

19. Tack and Attire for Racking Horses

19.1. All tack must be neat and clean and fit the horse correctly.

19.2. No boots, set tails or artificial appliances are permitted in any Racking Horse class.

19.3. Bridles

A. Hackamores, martingales and tie-downs are prohibited.

B. Bridles should be the type commonly used by Racking Horses, with single reins.

C. Bit shanks (ring to ring) can be no longer than 9 1/2 inches, except in style and open racking where bit length is unrestricted.

19.4. Saddles

A. Saddles should be the flat English type.

B. Forward seat saddles are prohibited.

C. Western saddles are prohibited except in designated Western and/or Country Pleasure classes.

19.5. Braiding should be attached neatly at forelock and mane.

19.6. Dress

A. Following the tradition of the show ring, it is necessary that the exhibitors be neatly attired for competition.

B. The exhibitor will wear an English riding habit, with the exception of designated Western or Country Pleasure Racking classes.

C. All riding attire shall be neat and properly fitted.

D. A proper hat is required for a gentleman; a lady's hat is optional.

19.7. Breast straps may be used and must be free of any imprinting of names or symbols.

20. Shoeing Requirements for Racking Horses

20.1. Flat Shod shall be construed as being hoof-to-shoe with no pad being used for any purpose, which shall include corrective shoeing. Weighted shoes are allowed.

A. Shoe must not exceed 1/2 inch thickness or 1 1/2 inch in width, with no bare plates or other weight inside the shoe. The caulk must not exceed 3/4 inch and the shoe must not exceed more than 1 inch behind the hoof at the toe.

B. The use of shoeing bands IS permitted EXCEPT in Trail Pleasure Racking.

C. The use of welded clips are prohibited in all flat shod classes. However, clips that are drawn from the shoe itself are allowed.

D. No additional weights shall be allowed in or on the hoof other than shoe and nails.

20.2. Open Shod shall be construed as having pads which can be flat pads or wedge pads.

A. Weighted shoes are allowed.
B. Shoeing requirements for open shod horses are outlined in the "Rules and Regulations of the Racking Horse Breeders Association of America."

21. Trail Pleasure Racking – Horse and Pony

21.1. Classes
A. Class 329 – Junior members
B. Class 330 – Senior members

21.2. Entries shall be shown with a flat English saddle and English bridle equipped with a curb or any standard racking horse bit. Martingales and tiedowns are prohibited.

21.3. Horses and ponies shall be flat shod, hoof-to-shoe (no pads or bands), and shoe shall be made in a manner either conventional or hand made.

21.4. Use of chains, boots and any other artificial appliances is prohibited.

21.5. Riders shall wear neat, clean appropriate English attire including a coat and tie or collar. Spurs, bats, short whips, crops and similar equipment are all optional.

21.6. Horses and ponies are to be shown at the trail pleasure walk, trail pleasure rack and are to be backed to be judged as follows:
A. 30 percent trail pleasure walk.
B. 40 percent trail pleasure rack.
C. 20 percent conformation.
D. 10 percent manners.
E. Suitability to rider is to be considered.

22. Show Pleasure Racking – Horse and Pony

22.1. Classes
A. Class 331 – Junior members
B. Class 332 – Senior members

22.2. Entries shall be shown with a flat English saddle and English bridle equipped with a curb or any standard racking horse bit. Martingales and tiedowns are prohibited.

22.3. Horses and ponies will be open shod with pads being allowed at the discretion of the owner. Shoeing requirements regarding length of hoof, toe-to-heel, are as required by USDA rules and regulations.

22.4. A show pleasure Racking Horse shall be shown with a light rein, but not loose, shall be mounted in the bridle and will be shown at three gaits: show pleasure walk, show pleasure slow rack and show pleasure fast rack.

22.5. To be judged as follows:
A. 20 percent show pleasure walk.
B. 30 percent show pleasure slow rack.
C. 30 percent show pleasure fast rack.
D. 20 percent conformation.
E. Manners and suitability to rider are to be considered.

23. Style Racking – Horse and Pony

23.1. Classes

A. Class 333 – Junior members

B. Class 334 – Senior members

23.2. Entries shall be shown with a flat English saddle and English bridle equipped with a curb or any standard racking horse bit. Martingales and tie-downs are prohibited.

23.3. Horses and ponies will be open shod with pads being allowed at the discretion of the owner. Shoeing requirements regarding length of hoof, toe-to-heel, are as required by USDA rules and regulations.

23.4. Use of chains, boots and any other artificial appliance is prohibited.

23.5. Riders shall wear neat, clean appropriate English attire, including a coat and tie or collar. Spurs, bits, short whips, crops and similar equipment are all optional.

23.6. Class shall be judged on the horse and pony's disposition, mouth, manners and response to rider at the show walk and style rack both ways of the arena with moderate animation.

23.7. To be judged as follows:

A. 40 percent show walk

B. 40 percent style rack

C. 20 conformation.

D. Manners and suitability to rider are to be considered.

24. Open Racking – Horse and Pony

24.1. Classes

A. Class 335 – Junior members

B. Class 336 – Senior members

24.2. Entries shall be shown with a flat English saddle and English bridle equipped with a curb or any standard racking horse bit. Martingale and tie-downs are prohibited.

24.5. Horses and ponies will be open shod with pads being allowed at the discretion of the owner. Shoeing requirements regarding length of hoof, toe-to-heel, are as required by USDA rules and regulations.

24.6. The head set shall be collected and will be shown at three gaits: show walk, slow rack and fast rack. Form is never sacrificed for speed.

24.7. To be judged as follows:

A. 20 percent show walk.

B. 30 percent slow rack.

C. 30 percent fast rack.

D. 20 percent on conformation.

E. Manners and suitability to rider are to be considered.

25. Walking/Racking Trail Horse

25.1. Classes

A. Class 337 – Junior members

B. Class 338 – Senior members

25.2. See class description starting on page 35

Saddle and English Division

This division is designed for "pleasure type" horses (Arabian, Morgan, Saddlebred, etc.) and will be judged according to those standards. Stock type horses should NOT enter this division. Proper attire must be maintained at all times. However, in excessively hot weather, with the approval of the judge, coats may be removed.

1. Saddle/English Showmanship and Grooming

1.1. Classes

A. Class 401 – Junior members

B. Class 402 – Senior members

1.2. Horse and ponies are to be shown in hand at halter or bridle at a walk, trot and pose.

1.3. To be judged according to 4-H Horse Project Showmanship and Grooming Scorecard.

2. Saddle/English Mares

2.1. Class 403 – Mares Horse and pony (all ages)

2.2. Mares to be shown in hand, at halter or bridle.

2.3. To be judged on conformation, soundness and condition.

2.4. Each entry will be shown individually at the walk and trot.

2.5. Show by age of horse, not age or grade of exhibitor.

3. Saddle/English Geldings

3.1. Class 404 – Geldings – Horse and pony (all ages)

3.2. Geldings to be shown in hand at halter or bridle.

3.3. To be judged on conformation, soundness and condition.

3.4. Each entry will be shown individually at the walk and trot.

3.5. Shown by age of horse, not age or grade of exhibitor.

4. Saddle Seat Equitation

4.1. Classes

A. Class 405 – Junior members

B. Class 406 – Senior members

4.2. The rider only is being judged.

4.3. Rider to show horses at a walk, trot and canter both ways of the ring.

4.4. Rider will be judged on his/her seat, hands, legs, feet, position, balance and control of mount.

4.5. Suitability of horse to rider shall be considered.

4.6. Rider should maintain a seat that is thoroughly efficient and in balance with the horse for riding at any gait. Rider should convey the impression of effective and easy control.

4.7. Riders may be asked to back their horses or perform any of the individual tests which follow:

A. Address the reins (pick up reins).

B. Back up for not more than eight steps.

C. Perform on rail.

D. Perform around ring.

E. Execute figure-eight at trot, demonstration change of diagonal. Unless specified, it may be started either facing the center or away from the center. If started facing the center, it must be commenced from a halt.

(1) At left diagonal, rider should be sitting the saddle when left front leg is on ground.

(2) At right diagonal, rider should be sitting saddle when right front leg is on the ground.

(3) When circling clockwise, rider should be on left diagonal.

(4) When circling counter clockwise, rider should be on right diagonal.

F. Execute figure-eight at canter on correct lead, demonstrating simple change of lead. (This is a change whereby the horse is brought back into a walk and restarted into a canter on the opposite lead.) Unless specified, it may be started either facing the center or away from the center. If started facing the center, it must be commenced from a halt. Figure-eight commenced in center of two circles so that one lead change is shown.

G. Execute serpentine at a trot and/or canter on correct lead, demonstrating simple change of lead. Administer a series of left and right half circles off-center of imaginary line where correct diagonal or lead must be shown.

H. Change leads down center to ring or on the rail, demonstrating simple change of lead. Judge to specify exact lead changes to be executed as well as to specify the beginning lead.

I. Ride without stirrups for a brief period of time. No more than one minute at the trotting phase.

J. Perform demonstration ride of approximately one minute on own mount.

4.8. Rider must write down and give to judge beforehand what pattern he/she plans to demonstrate. To be used for close placing of top riders in class. The test must be stopped at the end of one minute, but the rider will not be penalized for not completing it.

5. Three-gaited Saddle Horse and Pony

5.1. Classes

A. Class 407 – Junior members

B. Class 408 – Senior Members

5.2. Entries shall be shown in a flat English saddle with a full English bridle equipped with a snaffle and a curb, pelham or curb bit.

5.3. Use of a single snaffle, bosal, mechanical hackamore, martingale, draw-reins and/or tie-down is prohibited.

5.4. Entries may have pads of any thickness and may have clipped manes and tails. Horses and ponies may be braided, braced, have their tails set and have artificial hair pieces applied.

5.5. Spurs, bats, short whips, crops and similar equipment are all optional.

5.6. Class shall be judged on the horse and pony's manners and performance at the walk, trot and canter both ways of the ring. A. Horses and ponies should have an animated, graceful walk.

B. A square, collected and balanced trot.

C. A slow, smooth canter straight on both leads.

D. Horses and ponies may be asked to reverse at the walk and trot only and shall be penalized for wrong leads, excessive speed and/or breaking gaits.

E. Entries should back readily and stand quietly.

F. Judges may use conformation in cases of extremely close performances.

6. English Pleasure – Horse and Pony

6.1. Classes

A. Class 409 – Junior members

B. Class 410 – Senior members

6.2. Horses shall be shown in a flat English saddle with a full English bridle with snaffle and curb, pelham or curb bit. Use of single snaffles, bosals, mechanical hackamores, martingales, draw-reins and/or tie-downs are prohibited.

6.3. Horses must be plain shod (flat) without pads and/or bands, and may have a full mane and tail that may be braided. However, horses may not be braced, gingered, have their tails set or have artificial hair pieces applied.

6.4. Spurs, bats, short whips, crops and similar equipment are all optional.

6.5. Class shall be judged on the horse's manners and ability to give a pleasurable ride on a reasonably loose rein (without loss of contact with the horse's mouth) at the flat walk, square trot and canter both ways of the ring, without extreme animation.

A. Horses may be asked to reverse at the walk and trot only, and shall be penalized for wrong leads, excessive speed and/or breaking gaits.

B. Horses should back readily and stand quietly.

C. Judges may ask for extension of any gait, additional work and may use conformation in cases of extremely close performances.

6.6. Horses shown in this class can not enter Class 411 or 412.

7. Show Pleasure Horse and Pony

7.1. Classes

A. Class 411 – Junior members

B. Class 412 – Senior members

7.2. Horses shall be shown in a flat English saddle with a full English bridle with a snaffle and a curb, a pelham or curb bit. Use of a single snaffle, bosal, mechanical hackamore, martingale, draw-reins and/or tie-down is prohibited.

7.3. Use of a single snaffle, bosal, mechanical hackamore, martingale, draw reins and/or tie-down is prohibited.
7.4. Horse may have pads that may be of any thickness and may have full manes and tails that may be braided. Use of artificial hair pieces is optional. However, horses may not be braced, gingered or have set tails.
7.5. Spurs, bats, short whips, crops and similar equipment are all optional.
7.6. Class shall be judged on the horse's manners and ability to give a pleasurable ride with light contact with the horse's mouth at the flat walk, square trot and canter both ways of the ring with moderately animated action.

A. Horses may be asked to reverse at the walk and trot only and shall be penalized for wrong leads, excessive speed and/or breaking gaits.
B. Horses should back readily and stand quietly.
C. Judges may ask for extension of any gait, additional work and may use conformation in cases of extremely close performances.

7.7. Horses shown in this class can not enter Class 409 or 410.

8. Road Hack – Horse and Pony

8.1. Classes

A. Class 413 – Junior members
B. Class 414 – Senior members

8.2. Horses/ponies will be shown at a walk, trot, extended trot, canter and hand gallop at least once around the ring in each direction. Horses and ponies may be reversed by turning either towards the rail or the center of the ring.
8.3. All horses and ponies should stand quietly and back readily.
8.4. Only a safe number (maximum of eight) of horses and ponies will gallop at any one time.
8.3. Horses and ponies will be judged as follows:

A. 75 percent on manners and way of going.
B. 25 percent on suitability of horse to rider, cleanliness and neatness of rider, horse and tack.

9. Western Pleasure – Horse and Pony

9.1. Classes

A. Class 415 – Junior members
B. Class 416 – Senior members

9.2. To be shown in western tack with one hand.
9.3. To be shown at a walk, jog-trot and lope both ways of the ring on a light rein with contact. Horses/ponies will be backed.
9.4. Horses and ponies will be judged as follows:

A. 75 percent on manners and performance.
B. 25 percent on suitability of horse to rider, cleanliness, neatness of rider, horse and tack.

10. Trail Horse – Horse and Pony

10.1. Classes

A. Class 417 – Junior members

B. Class 418 – Senior members

10.2. See class description starting on page 35

Spotted Saddle Horse Division

1. General Rules

This division is designed for Spotted Saddle Horses and will be judged according to those standards.

2. Equipment for Riders and Horses for Show Purposes

2.1. Riders' attire – It is the tradition of the show ring that riders, drivers and handlers be correctly attired for the classes in which they compete; that attendants be neatly dressed; and horses properly presented. The exhibitor of each entry shall conduct themselves in a sportsmanlike manner at all times. A show committee or judge shall excuse any entry or person from showing if not properly attired as shown below. Exhibitors will show in WESTERN attire in all classes EXCEPT designated ENGLISH classes.

A. Correct attire for English presentation

(1) English riding habit.

(2) Polished shoes or boots (worn with jodhpur tie-downs)

(3) Jodhpur pants, clean shirt (long-sleeved) and tie

(4) Matching vest

(5) Gloves (optional)

(6) English Spurs (optional)

B. Correct attire for Western presentation (not specifying English)

(1) Western shirt

(2) Western pants and/or clean jeans

(3) Western boots

(4) Western hat

(5) Western tie (optional)

(6) Western spurs (optional)

(7) Western chaps (optional)

(8) Western skirts and gauchos (optional)

(9) A Western dress coat or jacket will be optional.

(10) Four-foot whips will be optional except to four-wheeled vehicle classes.

(11) Rain gear is permissible with back number being clear to view.

2.2. Horses – All entries shall be clean, neatly trimmed, in good flesh presenting a healthy appearance and outfitted in clean and appropriate tack.

A. Correct tack for English presentation
(1) English saddle, show, cutback or park type
(2) English bridle and bit
(3) Braids
(4) Breast strap (optional)
(5) Whip (optional)

Prohibited equipment:
(1) Artificial Appliances
(2) Western saddles
(3) Side saddles

B. Correct tack for Western presentation
(1) Western saddle
(2) Western bridle
(3) Western saddle pad
(4) Western breast strap (optional)
(5) Western leather show halter with matching lead (silver optional)

Prohibited equipment:
(1) Hackamores
(2) Vinyl, rhinestones and patent leather
(3) Running or standing martingales
(4) Tie-downs
(5) Braids
(6) Cross-Chain Cavesson
(7) Training devices such as cables, pulleys, chains, ropes, etc., which are strictly prohibited.

2.3. In certain specialty classes and pleasure classes, the correct tack and attire that is required for the specific class should be used.

2.4. Name plates or names of horses, stables, trainers or exhibitors are prohibited on show equipment or attendant's attire (caps, shirts, jackets, etc.) in the show ring. Failure to observe this rule is cause for dismissal from the show ring of the entry in violation or of the entry of the stable whose name is observed in the ring (except name plates on saddles).

2.5. In all Spotted Saddle Horse performance classes, an exhibitor may show with 1 or 2 hands, but must maintain the same "hand hold" throughout the class.

3. Artificial Markings and Appliances

3.1. Any change in color of markings other than hoof is prohibited.

3.2. Only clear grooming materials are allowed on the hide and hair. Materials may be used to remove stains.

3.3. All artificial appliances are prohibited.

3.4. No chains or action devices shall be used on any horse. Chains on the show grounds are basis for expulsion from the show grounds.

3.5. Whips – No item may be used inside or from outside the ring while showing a horse, either in performance or in model classes, except one whip per handler no longer than 4 feet, including the

snapper. No lashes or appendages or any other appliances of any kind are permitted to be attached to the whip. A whip of this kind is not permitted in the warm up ring or show ring.

3.6. Hoof bands – Are permitted; however, must be 1/2 inch from bottom of coronary band.

3.7. Clips – 1/2 inch beat on clip drawn from the shoe, with no welding. Limit of three clips to a shoe. One on toe and one on each side is permitted.

3.8. Shoes – Entries shall be plain shod with no pads or plates welded inside or on to the shoe.

A. The shoe may not exceed 1 1/2 inch wide by 1/2 inch thick with the exception of caulk, which must be no thicker than 1 inch, and the turnback, which shall not exceed 1 inch.

B. The shoe cannot extend more than 1/4 inch beyond the hoof.

C. No additional weight shall be allowed on or in the hoof, other than the shoe and nails.

D. All horses must be flat shod or barefooted.

E. Barefooted horses may be shown; however, judges must disqualify lame or tenderfooted horses.

F. All shoe rules apply to all four feet.

3.9. Lite shod – Entries shall be plain shod with no pads or plates welded inside or on to the shoe.

A. The shoe may not exceed 1 inch wide by 3/8 inch thick with the exception of caulk, which must be no thicker than 3/4 inch, and the turnback, which shall not exceed 3/4 inch.

B. The shoe is not to extend beyond the bulb of the heel when a perpendicular line is drawn from the bulb of the heel to the ground.

C. No additional weight shall be allowed on or in the hoof, other than the shoe and nails.

D. All horses must be flat shod or barefooted.

E. Barefooted horses may be shown; however, judges must disqualify lame or tenderfooted horses. In compliance with the USDA for Yearlings, shoes must not exceed 16 ounces.

3.10. Bits – Severe bits will be penalized in the final judging. Bits with shanks of more than 10 inches must be eliminated from the show ring. Shanks are measured from the top of the metal of the top ring to bottom of the metal of the bottom ring, if the ring is welded to the bridle. If the bottom ring is broken or will twist or turn, then it is not considered a part of the shank and should not be measured as such; however, the top ring will always be included in the measurement of the shank.

A. If the bottom ring is welded to the shank, then it shall be considered a part of the shank and the measurement should include all of the bottom ring.

B. If the bottom ring of the shank is “broken” so that this bottom ring will turn or twist in any way, it is not considered

a part of the shank and should not be included in the shank measurement.

C. If the bottom ring of the shank is not broken, that is the bottom ring is welded or joined to the shank so that this bottom ring will not turn or twist, then it is a part of the shank and must be included in the shank measurement.

3.11. Gag bits – They may be used but no training paraphernalia, rope or rollers; leather with pulleys; or gag bits without shanks are allowed in show ring under saddle classes.

3.12. Curb chains or straps – They must lie flat against the jaw and be at least 1/2-inch wide.

3.13. Type of equipment – The type of equipment used may be either English or Western. However, the attire of the rider must correspond with the type of equipment used on the horse. Do not combine English and Western equipment and attire.

3.14. Gingering – The gingering of tails is prohibited and any horse suspected of having a gingered tail will be asked to leave the show ring.

3.15. Lubricants – The placing of lubricants and foreign substances of any kind in the pastern area is prohibited on Spotted Saddle Horses.

4. Gaits

4.1. Show walk – The show walk is a smooth, easy gait, smooth-back end, with the horse under control and the head set. Stiff-legged front or rear leg motion and an irregular gait, especially when entering the ring, are typical of the movement of a sore horse and the judge must immediately excuse any horse exhibiting this type of motion from the ring.

4.2. Show gait – An increase in speed from the show walk still being under control with the head set. Head shake or nodding of the horse's head is acceptable and will not be penalized. The back end should be smooth and the rider should exhibit an easy comfortable ride. A good show gait should never sacrifice form for speed.

4.3. Canter – The canter or lope is basically a collected gallop. It should be smooth and naturally rolling. Excessive pumping will be penalized. A collected movement is enjoyable to ride. The horse should be under control and on the correct lead when cantering. Horses not on the correct lead will be penalized.

5. Showmanship and Grooming

5.1. Classes

A. Class 501 – Junior members

B. Class 502 – Junior high members

C. Class 503 – Senior members

5.2. Showmanship and Grooming Scorecard

5.3 To be shown in hand at halter or bridle

5.4. Judged according to 4-H Horse Project

6. Spotted Saddle Horse Mares

6.1. Classes

A. Class 504 – Mares (5 years and under)

B. Class 505 – Mares (6 years and over)

6.2. To be shown in hand at halter or bridle with natural or roached mane.

6.3. To be judged on conformation, soundness and condition.

6.4. Each entry will be shown individually.

6.5. Shown by age of horse, not by age or grade of exhibitor.

7. Spotted Saddle Horse Geldings

7.1. Classes

A. Class 506 – Geldings (5 years and under)

B. Class 507 – Geldings (6 years and over)

7.2. To be shown in hand at halter or bridle with natural or roached mane.

7.3. To be judged on conformation, soundness and condition.

7.5. Each entry will be shown individually.

7.6. Shown by age of horse, not by age or grade of exhibitor.

8. Spotted Saddle Horse Ponies

8.1. Class 508 – Mares and geldings (all ages)

8.2. To be shown in hand at halter or bridle with natural or roached mane.

8.3. To be judged on conformation, soundness and condition.

8.4. Each entry will be shown individually.

8.65 Shown by age of horse, not by age or grade of exhibitor.

9. Spotted Saddle Horse Western Horsemanship (equitation)

9.1. Classes

A. Class 509 – Junior members

B. Class 510 – Junior high members

C. Class 511 – Senior members

9.2. General Information

A. Class to enter the ring at a show walk turning to the right and proceeding in that direction.

B. Senior members will be required to work at a show walk, show gait and canter. Junior members will work at the show walk and show gait. Junior members will not be required to canter.

C. Senior members can still show in class 513 although they cantered in this horsemanship class.

D. Riders must always be on the correct lead. When reversing to go the other direction, horses must turn away from the rail.

E. When lined up, horses are to stand quietly and back readily on command.

F. Senior riders may be asked to mount and dismount.

G. The judge may deem necessary to judge the rider's ability by having them work individually.

9.3. Rider's Position

A. Hands – In repose, arms are to be in a straight line with the body.

B. The rider should sit the saddle in a balanced, relaxed manner, with his/her back straight and shoulders even, and arms close to the body.

C. The stirrup should be just short enough to allow the heels to be lower than the toes.

D. Knees should be slightly bent and weight be directly over the balls of the feet.

E. Body always should appear comfortable, relaxed and flexible.

F. Feet should be placed in the stirrups, which vary on Western saddles.

G. The leg must maintain contact with the horse, to give aids to the horse.

Riders are to be judged on seat and hands and on their ability to ride and control a horse properly. Results as shown by the performance of the horse are not to be considered more important than the method used in obtaining them. Good hands are paramount. To be shown in Western tack and attire.

10. Spotted Saddle Horse Pleasure – No Canter

10.1. Classes

A. Class 512 – Junior members

B. Class 513 – Junior high members

C. Class 514 – Senior members

10.2. Horses shall enter the ring at a show walk and when the gate is closed the judge shall call for order of gaits starting with show walk then show gait, then back to the show walk.

10.3. Horses will then reverse directions and repeat the same.

10.4. Horses will be asked to back when lined up.

10.5. While the horse is in motion, the rider's hands shall be clear of horse and saddle.

10.6. Western tack including a Western saddle and a Western leather bridle will be used.

10.7. Horses shown in this class may not enter classes 515 and 516.

11. Spotted Saddle Horse Pleasure

11.1. Classes

A. Class 515 – Junior members

B. Class 516 – Senior members

11.2. Horses shall enter the ring at a show walk and when the gate is closed the judge shall call for the order of gaits starting with show walk, show gait, show walk and canter.

11.3. Horses shall be reversed and the order of gaits repeated.

11.4. Horses will be asked to back when lined up.

11.5. While the horse is in motion, the rider's hands shall be clear of horse and saddle.
11.6. Western tack including a Western saddle and a Western leather bridle will be used.
11.7. Horses shown in this class may not enter classes 512, 513 and 514.

12. Spotted Saddle Horse English Pleasure

12.1. Classes
A. Class 517 – Junior members (no canter)
B. Class 518 – Senior members
12.2. English Pleasure
A. Horses shall enter the ring at a show walk and, when the gate is closed, the judge shall call for gaits in the order of show walk, show gait, show walk and canter for seniors. Juniors will NOT CANTER.
B. Horses shall be worked both ways of the ring.
C. Horses are to back easily and stand quietly.
D. Workouts may be held.
E. English tack and attire are mandatory in this class. Snap brim or derby hats may be worn at the option of the exhibitor. Neatness and taste in attire is encouraged and should be a consideration of the judge in the final judging.
F. Whips or crops not to exceed 4 feet are permitted in English Pleasure.

13. SPOTTED SADDLE HORSE TRAIL

13.1. Classes
A. Class 519 – Junior members
B. Class 520 – Senior members
13.2. See class description starting on page 35

Pleasure Driving Class

1. Pleasure Driving – Horse and Pony

1.1. Classes

A. Class 601 – Junior members

B. Class 602 – Senior members

1.2. The Pleasure Driving Class is designed to be a fun class with awards but no points accumulated for the exhibitor.

1.3. All equipment and attire is legal provided it is safe and humane.

1.4. This is a pleasure class. A good entry is one that will provide a pleasant, responsive drive for a 4-H member.

1.5. This class tests equally the performance of the horse or pony and the skill of the driver.

1.6. To be judged as follows:

A. 50 percent on suitability, manners, way of going and performance of the horse or pony.

B. 50 percent on the driving skill, posture and overall appearance of the driver.

1.7. Entries are to be worked both ways of the ring at a walk, ordinary trot (pleasure) or favorite gait, and extended trot (road trot) or favorite gait.

1.8. Entries should be on the bit with light contact and no loose flapping reins.

1.9. The animal should stand quietly at the halt.

1.10. All entries will be asked to back.

1.11. "Heading" by a passenger is allowed.

1.12. Appropriate tack.

A. The harness and any suitable two- or four-wheel vehicle, which must be in safe condition, clean, with the harness fitting properly.

B. The metal fittings should be uniform, secure and polished.

C. Overchecks, side checks and running martingales are optional, but an animal without them should have a good natural head carriage.

D. Proper driving bits include: snaffle, liverpool, buxton, elbow and gig.

1.13. Appropriate driver attire.

A. The driver should be neatly dressed.

B. Driving aprons, hats, whips and gloves may be used.

1.14. The recommended method of driving is as follows:

A. All reins lead to the left hand, the right hand being used for assistance on turn, halts, etc.

B. The only person to handle the reins and whip is the driver.

C. An exhibitor in the driving class is encouraged to be accompanied by an adult for safety reasons, provided the cart or buggy is appropriate for two occupants. The passenger may not assist in the presentation in any way or the entry will be disqualified.

D. No animals are allowed in the vehicle during competition.

1.15. For safety, there will be no more than 10 entries permitted in the ring at one time.
1.16. Horses, ponies and miniatures from all other divisions may enter pleasure driving classes.

Dressage

SPECIAL NOTE: Dressage will be a "point earning" class. Points will be assigned to exhibitor and horse combination in the hunter division ONLY.

1. Dressage – Horse and Pony

May enter only one class

A. Class 701 – Junior members (training level)
B. Class 702 – Junior high members (training level)
C. Class 703 – Senior members (training level)
D. Class 704 – Junior and senior members (first level)

2. Object and General Principles

The object of dressage is the harmonious development of the physique and ability of the horse. The result is a horse that is more supple, calm, loose and flexible, but also confident, attentive and alert, thus developing perfect union between horse and rider.

3. Appointments

3.1. Personal

A. Suitable attire would include, but would not be limited to, a short riding coat of a dark color, white shirt, choker or stock tie, white or light colored breeches or jodhpurs, tall boots or paddock boots.
B. Clothing must be neat, clean and appropriate for hunter or dressage classes.
C. Properly fitted head gear with harness (S.E.I., ASTM helmets) is required. Blunt (unrowelled) spurs and a whip that does not exceed 4 feet including lash are allowed.
D. Gloves are preferred.

3.2. Tack

A. Horses are to be ridden in a PLAIN SNAFFLE with or without a drop, flash or figure-eight noseband.
B. Tack may be inspected prior to each ride.
C. Martingales are not allowed.
D. Any English type saddle may be used (i.e., dressage, forward seat, flat or cutback).
E. No curb bits of any fashion will be allowed, including Kimberwick. All bits must be smooth without corkscrew or twisted wire. Roller bits are prohibited.

4. The Gaits and Movements

4.1. Halt

A. Horse stands obediently quiet with equal weight on all four legs.

B. The horse should maintain a soft contact with the rider without allowing its poll to drop below its withers nor its nose to fall behind the vertical.

4.2. Working Walk – A marching four-beat rhythm on light contact with the rider.

4.3. Free Walk on a Long Rein

A. A four-beat rhythm with the horse stretching his topline and stride.

B. The rider still maintains contact with the horse but the horse must stretch its nose ahead of the vertical.

4.4. Working Trot – A forward two-beat rhythm that maintains a consistent tempo while remaining on the bit.

4.5. Working Canter – A forward three-beat rhythm with a quiet consistent tempo while remaining on the bit.

5. Tests

5.1. Tests for the current year will be sent to county Extension offices at an appropriate time.

5.2. Times will be scheduled approximately seven minutes apart.

5.3. Rider may begin schooling around the dressage arena when the rider before him/her has received a final salute from the judge and begins to exit the arena.

5.4. Upon audible signal (whistle or bell) from the judge, the competitor has 60 seconds to enter the dressage arena.

5.5. The dressage tests may be called by someone standing behind the letter E or B, or else the test may be ridden from memory.

A. Should a rider go off course, the judge will sound an audible sound.

B. The rider should stop and allow the judge to instruct him/her how to proceed. The rider then proceeds from memory or the caller starts calling the test from the point instructed by the judge.

C. Being off course constitutes an error. However, if the caller aids the rider in any fashion other than calling the test, the rider is eliminated.

D. Errors and points

(1) 1st error – 2 points

(2) 2nd error – 4 points

(3) 3rd error – elimination

6. Elimination

6.1. Automatic elimination occurs if the rider fails to enter the dressage arena within 60 seconds of the judge's audible signal.
6.2. All four of the horse's feet leave the arena after the test has begun.
6.3. Unauthorized assistance, obvious lameness or use of illegal equipment.

7. Scoring

10	Excellent	5	Sufficient
9	Very Good	4	Insufficient
8	Good	3	Fairly Badly
7	Fairly Good	2	Bad
6	Satisfactory	1	Very Bad
		0	Not performed

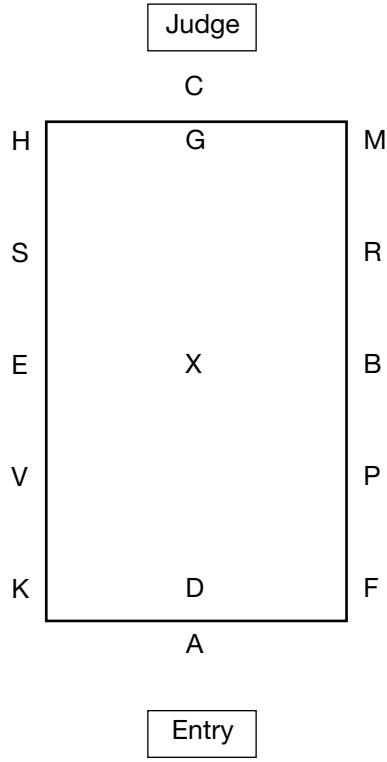

8. Schedules

8.1. A schedule denoting the time an exhibitor must perform the dressage class will be available and posted at office at the Tennessee State 4-H Horse Championships.

8.2. An exhibitor may not change his/her scheduled time of performance.

9. Arena

A small or large dressage arena may be used. The letters set around the arena are placed as pictured on the previous page.

Miniature Horse Classes

1. Showmanship

1.1. Classes

A. Class 801 – Miniature Showmanship – Junior and Senior members

B. Class 802 – Miniature Halter Mares and Geldings – All ages - Junior and Senior members

• These are non-point-earning classes. Miniatures MUST show in these two classes IF they show in showmanship and halter. However, miniatures will also be eligible to show in PLEASURE DRIVING.

4-H Horse Project Showmanship and Grooming Scorecard

Listed below are points on which youth shows are to be judged. Only the exhibitor is to be judged. The horse is merely a prop to show the ability of the exhibitor. Showmanship at halter shall be a separate class from all other halter classes. This performance class shall be judged strictly on the contestants' ability to fit and show in a halter class.

1. Appearance of Horse (40 Points)

1.1. Condition and Thriftiness (15 Points)

1.2. Grooming (15 Points)

A. Hair coat clean, well-brushed.

B. Mane, tail, foretop and wither tufts free of tangles and clean. Manes, tails, foretops and wither tufts may be English-braided or manes, foretops and wither tufts may be western-braided, if the exhibitor so desires or the schedule of classes dictates due to time.

C. Hoofs trimmed properly. If shod, shoes must fit properly and clinches should be neat.

1.3. Trimming (5 Points)

A. Manes may be roached, but foretop and tuft over withers must be left. Manes may be long or short, banded or unbanded.

B. Inside of ears may be clipped.

C. Long hair on jaw, legs and pasterns should be clipped.

1.4. Tack (5 Points)

A. Tack should be neat, clean and in good repair.

B. Whips are prohibited in all divisions.

C. May show in halter or bridle.

2. Appearance of Exhibitor (10 Points)

2.1. Clothes and person – neat and clean.

2.2. Suitable western or English attire clothes.

3. Showing Horse in Ring (50 Points)

3.1. Leading (15 points)

A. Enter ring leading animal at an alert walk in a counterclockwise direction unless otherwise directed by judge. Walk on animal's left side, holding lead shank in right hand, near halter. The remaining portion of lead is held neatly and safely in left hand. Animal should lead readily at a walk or trot.

B. The judge will call on each exhibitor to move his/her horse individually. When moving the horse, be sure that the judge gets a clear, unobstructed view of the horse's action. Allow the horse sufficient lead so that it can move freely and in a straight line. Lead the horse from the left side the required distance, stop and turn to the right around the horse.

C. It is mandatory that the judge post the pattern at least one hour prior to the commencing of the class; however, if the judge chooses to bring back exhibitors for consideration of final placing, the finals pattern need not be posted.

3.2. Posing (15 Points)

A. When posing your horse, stand toward the front facing the horse, but not directly in front of the horse and always in position where you can keep your eye on the judge.

B. Do most of the showing with lead strap. Never kick horse's leg into position.

C. Do not crowd the exhibitor next to you when in a side-by-side position. Do not crowd exhibitor in front when lined up head to tail.

D. When the judge is observing other animals, let your horse stand if posed reasonably well.

E. Be natural; overshowing, undue fussing and maneuvering are objectionable.

3.3. Poise, Alertness and Merits (20 Points)

A. Keep alert and be aware of the position of the judge at all times. Don't be distracted by persons or things outside the ring.

B. Show the animal at all times, not yourself.
C. Respond quickly to requests from the judge and officials.
D. Be courteous and sportsmanlike at all times.
E. Recognize quickly and correct faults of your horse.
F. Keep showing until the entire class has been placed and has been excused from the ring.

The Quarter Method

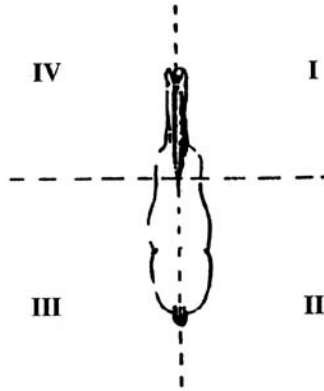

Figure A

NOTE: THE QUARTER METHOD: Suggested Guidelines of Movement – The following guidelines are meant to serve as an illustration of movement around the horse while showing in Showmanship at Halter and are for the exhibitor's information:

A. Imaginary lines bisect the horse into four equal parts as seen in Figure A. (Note: The quadrants will be numbered I, II, III and IV for ease of identification.) One line runs across the horse just behind the withers. The other imaginary line runs from head to tail.
B. When the judge is in I, the handler should be in IV. As the judge moves to II, handler should move to I. When the judge moves to III, the handler moves to IV. As the judge moves up the horse to IV, the handler returns once more to I.
C. This method is based on safety as the handler can keep the horse's hindquarters from swinging toward the judge should the horse become fractious.

State Horse Public Speaking Contest

1. Eligibility

Senior 4-H members (9th- to 12th-graders) will be eligible to participate in these activities. Members MAY NOT compete in a contest in which they have previously won FIRST place.

2. General Contest Rules

2.1. Subject must pertain to the horse industry. Speeches not appropriately related to the horse industry can be disqualified at the discretion of the judge(s)

2.2. No visual aids may be used.

2.3. Contestants may use notes. However, excessive use of notes may be counted against the contestant. This will be at the discretion of the judge(s).

2.4. A public address system will not be used during the contest, but a lectern will be provided.

2.5. During the event, the contestants may introduce themselves by name, state and speech topic.

2.6. Speeches should be seven to 10 minutes in length. Three points will be deducted from the total score on each judge's score sheet for every minute (or fraction of a minute) under seven minutes or over 10 minutes.

2.7. Contestants should cite their major reference after the conclusions of their speech. This time will not be counted in the allotted time.

2.8. Only the moderator may read questions to the contestant in the contest. Judges may compose questions on cards that the moderator reads. There is no minimum or maximum number of questions that may be asked. Question time will not be counted in the allotted time. Contestants should repeat the question, then answer it.

2.9. Contestant order will be determined by a random drawing and announced at the coaches' meeting.

2.10. Ties will be broken first by the judges' accumulated delivery score, second by the judges' accumulated organization score and third on content and accuracy scores.

3. Scoring of Speech

3.1. Introduction (10 Points)

A. Did the introduction serve to create interest in the subject?

B. Was the introduction short and to the point?

3.2. Organization (15 Points)

A. Were the main points easy to follow?

B. Were the main points arranged in the best order?

C. Were the sentences short and easy to understand?

D. Was the speech interesting?

3.3. Contest and Accuracy (20 Points)

A. Were the facts and information accurate?

B. Was there enough information concerning the subject?

C. Was credit given to the sources of information, if appropriate?
D. Was the content appropriately related to the horse industry?

3.4. Stage Presence (15 Points)
A. Was the speaker neat and appropriately dressed?
B. Did the speaker talk directly to and look at the audience?
C. Was the speaker's posture erect, but not stiff?
D. Did the speaker refrain from leaning on the lectern?
E. Did the speaker seem relaxed and at ease?

3.5. Delivery (20 Points)
A. Did the speaker have appropriate voice control?
B. Were all the words pronounced correctly?
C. Did the speaker's facial expressions reflect the mood of the speech?
D. If notes were used, was it done without distracting from the speech?
E. Did the speaker seem to choose words at the time they were spoken as opposed to a memorized or ready-type delivery?

3.6. General (10 Points)
A. Did the speaker convey to the audience a sense of wanting to communicate?
B. Did the speech reflect the thoughts and personality of the speaker?

3.7. Conclusion (10 Points)
A. Was the conclusion short and interesting?
B. Did the conclusion properly wrap up the speech?
C. Could the speaker handle questions easily?

State Horse Individual Presentation Contest

1. Eligibility

Senior 4-H members (9th- to 12th-graders) will be eligible to participate in these activities. Members MAY NOT compete in a contest in which they have previously won FIRST place.

2. General Contest Rules

2.1. The subject must pertain to the horse industry. Presentations not appropriately related to the horse industry can be disqualified at the discretion of the judge(s).

2.2. This may be a demonstration or an illustrated presentation. No live animals may be used.

2.3. Contestants may use notes. However, excessive use of notes may be counted against the contestant. This will be at the discretion of the judge(s).

2.4. A public address system will not be used during the contest.

2.5. Contestants must supply their own easels, but tables will be available.

2.6. Creative audiovisual aids may be used, but the contestant must be involved in making or designing them.
2.7. During the contest, the contestants may introduce themselves by name, state and presentation topic.
2.8. Presentations should be 9-12 minutes in length. Three points will be deducted from the total score on each judge's score card for every minute (or fraction of a minute) under nine minutes or over 12 minutes.
2.9. Contestants should cite their major references after the conclusion of their presentation. This will not be counted in the allotted time.
2.10. Only the moderator may read questions to the contestant in the contest. Judges may compose questions on cards that the moderator reads. There is no minimum or maximum number of questions that may be asked. Question time will not be counted in the allotted time. Contestants should repeat the question, then answer it.
2.11. Contestant order will be determined by a random drawing and will be announced before the start of the contest.
2.12. Ties will be broken first by the judges' accumulated delivery score, second by the judges accumulated organization score and third on content and accuracy score.
2.13. Judges will consider the questions listed under each section.

3. Scoring the Presentation Contest

3.1. Introduction (10 Points)
- A. Did the introduction serve to create interest in the subject?
- B. Was the introduction short and to the point?

3.2. Organization (25 Points)
- A. Was only one main idea demonstrated or presented?
- B. Did the discussion relate directly to each step as it was shown?
- C. Was each step shown just as it should be done in an actual situation or was an explanation given for any discrepancies?
- D. Could the audience see each step?
- E. Were the materials and equipment carefully selected, neatly arranged and well organized?
- F. Were charts and posters used if and when they were needed?
- G. Were the key points for each step stressed?

3.3. Content and Accuracy (25 Points)
- A. Were the facts and information presented accurate?
- B. Was there enough information presented about the subject?
- C. Were approved practices used?
- D. Was credit given to the sources of information, if appropriate?
- E. Was the content appropriately related to the horse industry?

3.4. Stage Presence (10 Points)
- A. Was the presentor neat and appropriately dressed for the subject of the demonstration?

B. Did the presentor speak directly to and look at the audience?
C. Was the presentor too fast or too slow?

3.5. Delivery (15 Points)
A. Did the presentor appear to enjoy giving a demonstration?
B. Did the presentor have good voice control?
C. Were all words pronounced correctly?
D. If notes were used, was it done without distracting from the presentation?
E. Did the presentor seem to choose words at the time they were spoken as opposed to a memorized presentation?

3.6. Effect on the Audience (5 Points)
A. Did the audience show an interest in the presentation?
B. Could the audience go home and carry out the idea?

3.7. Summary (10 Points)
A. Was the summary short and interesting?
B. Were the key points briefly reviewed?
C. Did the summary properly wrap up the presentation?
D. Could the presentor handle questions easily?

State Horse Team Presentation Contest

1. Eligibility

Senior 4-H members (9th- to 12th-graders) will be eligible to participate in these activities. Members MAY NOT compete in a contest in which they have previously won FIRST place.

2. General Contest Rules

2.1. The subject must pertain to the horse industry. Presentations not appropriately related to the horse industry can be disqualified at the discretion of the judge(s).
2.2. This may be a demonstration or an illustrated presentation. No live animals may be used.
2.3. Contestants may use notes. However, excessive use of notes may be counted against the contestant. This will be at the discretion of the judge(s).
2.4. A public address system will not be used during the contest.
2.5. Participants must supply their own props. Tables will be available for contestants.
2.6. Creative audiovisual aids may be used, but the contestants must be involved in making or designing them.
2.7. During the contest, the contestants may introduce themselves by name, state and presentation topic.
2.8. Presentations should be 10 to 15 minutes in length. Three points will be deducted from the total score on each judge's score card for every minute (or fraction of minute) under 10 minutes or over 15 minutes.

2.9. Contestants should cite their major references after the conclusion of their presentation. This will not be counted in the allotted time.
2.10. Only the moderator may read questions to the contestants in the contest. Judges may compose questions on cards that the moderator reads. There is no minimum or maximum number of questions that may be asked. Question time will not be counted in the allotted time. Contestants should repeat the question, then answer it.
2.11. Contestant order will be determined by a random drawing and will be announced at the specialist meeting.
2.12. Ties will be broken first by the judges' accumulated delivery score, second by the judges accumulated organization score and third on content and accuracy score.
2.13. Judges will consider the questions listed under each section. The point on the score card will be as follows:

3. Scoring the Team Demonstration

3.1. Introduction (10 Points)
- A. Did the introduction serve to create interest in the subject?
- B. Was the introduction short and to the point?

3.2. Organization (25 Points)
- A. Was only one main idea presented?
- B. Did the discussion relate directly to each step as it was shown?
- C. Was each step shown just as it should be done in an actual situation or was an explanation given for any discrepancies?
- D. Could the audience see each step?
- E. Were the materials and equipment carefully selected, neatly arranged and well organized?
- F. Were charts and posters used if and when they were needed?
- G. Were the key points for each step stressed?

3.3. Content and Accuracy (25 Points)
- A. Were the facts and information presented accurate?
- B. Was there enough information presented about the subject?
- C. Were approved practices used?
- D. Was credit given to the sources of information, if appropriate?
- E. Was the content appropriately related to the horse industry?

3.4. Stage Presence (10 Points)
- A. Were the presentors neat and appropriately dressed for the subject of the demonstration?
- B. Did the presentors speak directly to and look at the audience?
- C. Was the presentation too fast or too slow?

3.5. Delivery (15 Points)
- A. Did the presentors appear to enjoy giving a demonstration?
- B. Did the presentors have good voice control?

C. Were all words pronounced correctly?
D. If notes were used, was it done without distracting from the presentation?
E. Did the presentors seem to choose words at the time they were spoken as opposed to a memorized presentation?

3.6. Effect on the Audience (5 Points)
A. Did the audience show an interest in the presentation?
B. Could the audience go home and carry out the idea?

3.7. Summary (10 Points)
A. Was the summary short and interesting?
B. Were the key points briefly reviewed?
C. Did the summary properly wrap up the demonstration?
D. Could the presentors handle questions easily?

Tennessee State 4-H Horse Judging Contest

1. Eligibility

The top four senior 4-H horse judging teams from each of the three regions are eligible.

2. Classes

Classes will be indicative of the varied horse population in Tennessee.

2.1. Halter classes can include, but are not limited to, Quarter Horses, Tennessee Walking Horses, Arabian, Hunters, Saddlebred and Spotted Saddle Horses.

2.2. Performance classes can include, but are not limited to, Western Pleasure, Hunter Under Saddle, Plantation Pleasure, Western Riding, English Pleasure, Reining, Hunter Hack, Western Horsemanship and Hunt Seat Equitation.

3. Reasons

Oral reasons will not exceed two halter and two performance classes. A minimum of three sets of reasons will be given.

4. Out-of-State Trips

4.1. The first-place team will represent Tennessee at the Eastern National 4-H Horse Judging Contest in Louisville, KY.

4.2. The winning team will receive $500 toward total team expenses for the Eastern National.

4.3. The first and second place team will represent Tennessee at the Southern Regional 4-H Horse Championship Judging Contest held annually in the South or Southwest. No expenses provided

4.4. It is possible that lower-placing teams can represent Tennessee at other contests (Congress, AQHYA World, Paint Nationals, Arabian Nationals, etc.). However, higher-ranking teams will receive priority.

NOTES

Nomination Form
Tennessee 4-H Horse Project
Volunteer Leader Award

Due May 15 in the county Extension office. County offices forward forms to the appropriate regional office for evaluation

Name _____

Address _____County _____

City _____State _____

ZIP _____

Phone: Home (___) _____ Work (___) _____

Number of years as a 4-H Volunteer Leader _____

Number of years as a 4-H "Horse Project" Volunteer Leader _____

- List/discuss activities and accomplishments with the county 4-H horse project on the LOCAL level.

_____

_____

_____

_____

- List/discuss activities and accomplishments with the county 4-H horse project on the STATE AND NATIONAL level.

_____

_____

_____

_____

- Involvement of the horse project volunteer leader in community service work other than 4-H.

_____

_____

- Attach additional sheets and/or documentation to support the nomination.

- More than one nomination will be accepted from each county.

Visit the UT Extension Web site at
http://www.utextension.utk.edu/

THE UNIVERSITY of TENNESSEE

PB1760 5M 12/05(REV) E12-4415-00-006-06 06-0137

Programs in agriculture and natural resources, 4-H youth development, family and consumer sciences, and resource development. University of Tennessee Institute of Agriculture, U.S. Department of Agriculture and county governments cooperating. UT Extension provides equal opportunities in programs and employment.