Pursuit: The Journal of Undergraduate Research at the University of Tennessee
Copyright © The University of Tennessee

Pursuit

Multilevel DC-AC Converter Interface with Solar Panels

YUE CAO
Advisor: Leon Tolbert

Department of Electrical Engineering and Computer Science,
University of Tennessee, Knoxville

This paper presents a single-phase 11-level (5 H-bridge) cascaded multi-level DC-AC converter that has implemented a Phase Locked Loop (PLL) and Maximum Power Point Tracking (MPPT) with 5 separate solar panel DC sources. This topology upgrades the conventional 3-level Pulse Width Modulation (PWM) controlled converter with advantages such as smoother output waveforms, more flexibility in voltage range, smaller filter size, and switching angle control. Simulation results of voltage synchronization using PLL and experimental setup and results implementing the entire converter interface are also presented.

Introduction

Because energy resources and their utilization will be a prominent issue of this century, the problems of natural resource depletion, environmental impacts, and the rising demand for new energy resources have been discussed fervently in recent years. Several forms of renewable zero-pollution energy resources, including wind, solar, bio, geothermal and so forth, have gained more prominence and are being researched by many scientists and engineers [1-2]. In the solar energy field, several companies continuously research and manufacture more efficient solar panels to convert solar energy into electric energy, and more specifically, in the form of a DC source. Power electronics engineers, on the other hand, have come up with ways to convert DC voltage into AC voltage for direct use with AC loads or to interface with the existing AC electric grid.

Most solar cell installations involve the use of multiple solar panels or modules, which are connected in series or parallel. The cascaded H-bridge multilevel converter topology requires a separate DC source for each H-bridge, so the combination of the multiple modules with a multilevel converter makes it one of the suitable options for this type of

application. Traditional multilevel converters include the cascaded H-bridge converter, diode clamped converter, and flying capacitors converter [3-6]. This paper presents a single-phase 11-level (5 H-bridge) cascaded multilevel converter that has implemented a Phase Locked Loop (PLL), which allows synchronization and interaction of the inverter with the grid, and a Maximum Power Point Tracking (MPPT), which assures optimum operation of the solar panels, with 5 separate solar panel DC sources. This new topology upgrades the conventional three-level PWM converter with advantages such as smoother output waveforms, more flexibility in voltage range, smaller filter size, switching angle control, etc.

Multilevel Converter and PV Interface

The overview of the Photovoltaic (PV) inverter can be illustrated by Fig. 1. The details of each part are discussed below.

The core component of this inverter design is the four-switch combination shown in Fig. 1. By connecting the DC source to the AC output by different combinations of the four switches, Q_{11}, Q_{12}, Q_{13}, and Q_{14}, three different voltage output levels can be generated, $+V_{dc}$, 0, and $-V_{dc}$. The DC source in the inverter comes from the PV arrays, and the switching signals come from the PWM controller. The 11-level converter connects five H-bridges in series controlled by five sets of different PWM signals so that a near sinusoidal waveform can be generated by turning on each level at different times.

Figure 1. Control block diagram of solar panel and multilevel converter.

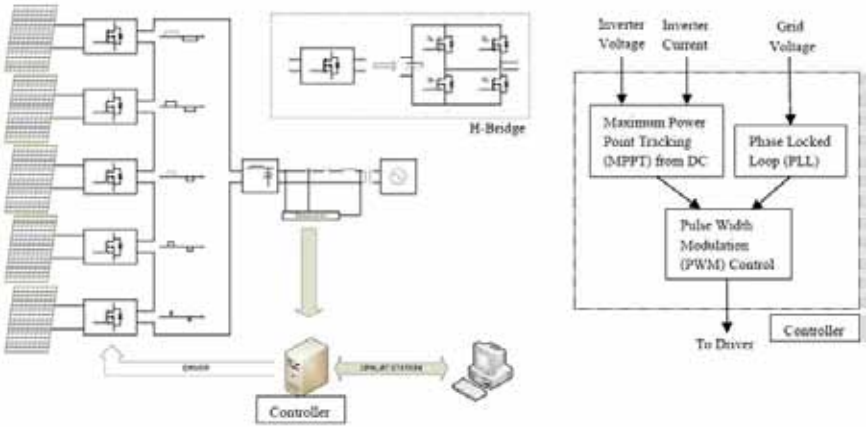

The switches are modulated using the well known Sinusoidal Pulse Width Modulation (SPWM), however, each of the five inverters has its own triangular carrier that is compared with the same reference waveform (sine wave) to generate the driving signals. If the reference signal is greater than the carrier, then the output signal is 1. Since there are five H-bridges, and within each H-bridge there are two PWM signals, one controlling switches Q_{11} and Q_{13} and the other controlling switches Q_{12} and Q_{14}, there are totally ten PWM signals required for the single-phase 11-level multilevel converter. Notice that the sum of all the five signals for switches Q_{11} and Q_{13} and the sum of all the five signals for switches Q_{12} and Q_{14} actually produce a near sinusoidal waveform [7-9]. To smooth this near sinusoidal waveform, an LC filter is added to the inverter output. To achieve best filtering results, the values of the capacitor and the inductor are added as 50μF and 1mH, respectively.

To synchronize the inverter with the grid, it is necessary that the inverter produce an output voltage in phase with the grid. In addition, the reference signal to the inverter must be noise proof with respect to the grid. To generate an in-phase reference signal, a Phase Locked Loop (PLL) algorithm is used. Typical PLL algorithms include inverse Park-based PLL, Hilbert transformer-based PLL, and transport delay-based PLL [10-13]. The one to be included in this design is the transport delay-based PLL. Fig. 2(a) shows the block diagram of this PLL algorithm. Notice that the delayed angle can be directly controlled at the computer during the experiment to provide the signal in quadrature with the grid, which is the input to the park transform block. The PLL output is the actual angle position of the grid voltage. This signal is used to generate the sine wave that is used as the reference signal to the control system, which will drive the switches. The time required for synchronization will be dependent on the PI block parameters. Fig. 2(b) shows the PLL synchronization simulation. In that figure, the PLL starts its synchronization at 0.03 second, and it is in synchronization after about 0.13 second. Since the angle is now known, it is possible to control the phase difference between inverter and grid by controlling θ_{grid}. This allows the power flow to be controlled according to equation,

$$P = \frac{V_{inv} \cdot V_{grid}}{X_L} \sin\delta$$

where V_{inv} is the inverter voltage, V_{grid} is the grid voltage, X_L is the connection impedance, and δ is the angle between grid and inverter.

Figure 2a. Transport delay-based PLL algorithm.

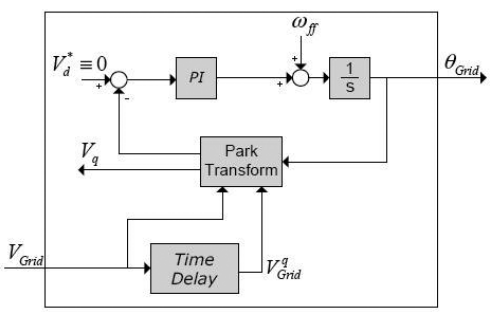

Figure 2b. Voltage synchronization and phase shift using PLL.

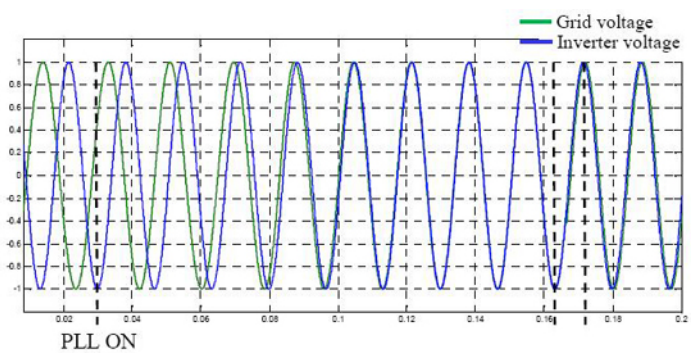

The addition of a Maximum Power Point Tracking (MPPT) system helps in determining the most efficient point of operation of the solar panel voltage. It monitors voltage and current parameters by making small changes on the phase angle and looking at the power variation, as in a hill climbing optimization method to track the maximum power point [14-15]. Thus, there exists a point where the maximum power, $P = VI$, can be obtained.

Experimental Demonstration

Each one of the five H-bridge has its own PV set connected as an independent source. The control signals to the bridges are sent by the OPAL-RT workstation where software and I/O boards are installed. The system acquires grid voltage and inverter output current and voltage to the control block to generate the driven signals to the inverter. Fig. 3 shows the experimental solar panel and the multilevel converter setup.

Figure 3. Experimental setups. (a) PV Module comprised of five solar panels. (b) 11-level (5 H-bridges) cascaded multilevel converter.

The RT-Lab control platform, which connects the software (PWM, PLL, MPPT) with the hardware (solar panel, grid, 11-level cascaded H-bridge converter, RLC filter) to create a real time workshop, is the main tool to perform the experiments. After carefully installing diodes on the solar panels to prevent reverse current flow that may cause damage, a 2000 Hz discrete-time RT-Lab drives the converter with five solar panels as DC inputs and the 120 V 60 Hz AC as grid. Fig. 4(a) shows unfiltered and filtered sinusoidal voltages with all five levels of H-bridge converter under PWM control. On a sunny day, each solar panel can ideally output 24 V (however, the output voltage is 20 V on average), so the maximum possible input is 120 V. Fig. 4(a) shows the inverter unfiltered voltage before the transformer, which is used to step up the voltage at grid levels. It can be noticed that they are in synchronization and have the same RMS (root mean squared) value. In Fig. 4(b), a 15° phase shift is applied and power is transmitted from the solar panel to the grid. Inverter voltage and current are shown together with the grid voltage in this case.

Figure 4. Experimental voltage and current waveforms. (a) Utility voltage and unfiltered output voltage of multilevel inverter. (b) Current waveform for grid connected multilevel converter.

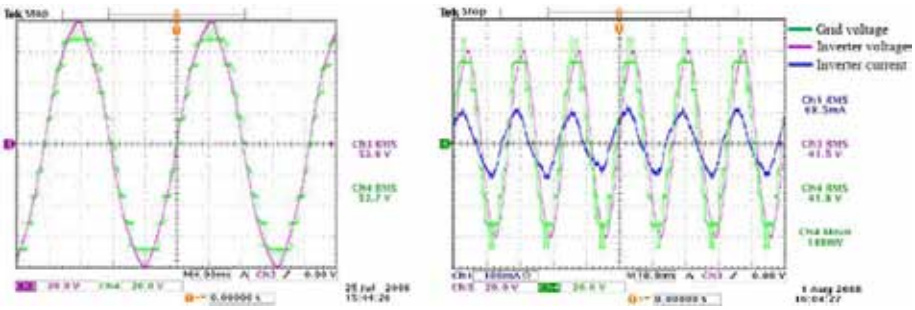

Conclusions

This paper presents an 11-level PWM H-bridge cascaded PV converter, which uses PLL and MPPT with separate solar panel DC sources to enable grid interaction. The entire PV inverter structure and each core component of the inverter are analyzed in detail. The Simulink simulations provide a solid theoretical basis for the functions of the PV inverter, including PWM signal generation, PLL phase delay, LC filtering, and the feedback sinusoidal AC current. Furthermore, experimental results indicate that a significant amount of solar panel voltage can be applied using the 11-level, and that clearly a certain amount of power can be drawn and fed back to grid from the solar panel. Future application of this model can be implemented for solar-powered houses, for example, on which a large array of solar panels can be installed and electric power up to a few kilowatts can be generated.

References

[1] J.M. Carrasco, L.G. Franquelo, J.T. Bialasiewicz, E. Galvan, R.C.P. Guisado, Ma. A.M. Prats, J.I. Leon, N. Moreno-Alfonso, "Power-Electronic Systems for the Grid Integration of Renewable Energy Sources: A Survey," *IEEE Transactions on Industrial Electronics*, vol. 53, no. 4, June 2006, pp. 1002-1016.

[2] A.J. Morrison, "Global Demand Projections for Renewable Energy Resources," *IEEE Canada Electrical Power Conference*, Oct. 25-26, 2007, pp. 537-542.

[3] L.M. Tolbert, F.Z. Peng, "Multilevel Converters as a Utility Interface for Renewable Energy Systems," *IEEE Power Engineering Society Summer Meeting*, Seattle, Washington, July 15-20, 2000, pp. 1271-1274.

[4] S. Khomfoi, L.M. Tolbert, "Multilevel Power Converters," *Power Electronics Handbook*, 2nd Edition Elsevier, 2007, ISBN 978-0-12-088479-7, Chapter 17, pp. 451-482.

[5] S. Busquets-Monge, J. Rocabert, P. Rodriguez, S. Alepuz, J. Bordonau, "Multilevel Diode-clamped Converter for Photovoltaic Generators with Independent Voltage Control of Each Solar Array," *IEEE Transactions on Industrial Electronics,* vol. 55, July 2008, pp. 2713-2723.

[6] E. Ozdemir, S. Ozdemir, L.M. Tolbert, B. Ozpineci, "Fundamental Frequency Modulated Multilevel Inverter for Three-phase Stand-alone Photovoltaic Application," *IEEE Applied Power Electronics Conference and Exposition*, Feb. 24-28, 2008, pp. 148-153.

[7] S. Ozdemir, E. Ozdemir, L.M. Tolbert, S. Khomfoi, "Elimination of Harmonics in a Five-level Diode-clamped Multilevel Inverter Using Fundamental Modulation," *International Conference on Power Electronics and Drive Systems*, Nov. 27-30, 2007, pp. 850-854.

[8] J.S. Lai, F.Z. Peng, "Multilevel Converters - A New Breed of Power Converters," *IEEE Transactions on Industry Applications,* Vol. 32, No. 3, May/Jun 1996, pp.509-517.

[9] B. Kavidha, K. Rajambal, "Transformerless Cascaded inverter Topology for Photovoltaic Applications," *India International Conference on Power Electronics*, Chennai, India, Dec. 19-21, 2006, pp. 328-331.

[10] E. Villanueva, P. Correa, J. Rodriguez, "Control of a Single Phase H-bridge Multilevel Inverter for Grid-connected PV Applications," *Power Electronics and Motion Control Conference*, Poznan, Poland, Sept. 1-3, 2008, pp. 451-455.

[11] R.B. Godoy, H.Z. Maia, F.J.T. Filho, L.G. Junior, J.O.P. Pinto, G.S. Tatibana, "Design and Implementation of a Utility Interactive Converter for Small Distributed Generation," *IEEE Industry Applications Conference*, vol. 2, Oct. 8-12, 2006, pp. 1032-1038.

[12] S.M. Silva, B.M. Lopes, B.J.C. Filho, R.P. Campana, W.C. Boaventura, "Performance Evaluation of PLL Algorithms for Single-phase Grid-connected Systems," *IEEE Industry Applications Society Annual Meeting*, Seattle, Washington, October 3-7, 2004, pp. 2259-2263.

[13] A. Pandey, N. Dasgupta, A.K. Mukerjee, "A Simple Single-sensor MPPT Solution," *IEEE Transactions on Power Electronics*, vol. 22, No. 2, March 2007, pp. 698-700.

[14] T. Esram, P. L. Chapman, "Comparison of Photovoltaic Array Maximum Power Point Tracking Techniques," *IEEE Transactions on Energy Conversion*, vol. 22, no. 2, June 2007, pp. 439-449.

[15] O. Alonso, P. Sanchis, E. Gubia, L. Marroyo, "Cascaded H-bridge Multilevel Converter for Grid Connected Photovoltaic Generators with Independent Maximum Power Point Tracking of Each Solar Array," *IEEE Power Electronics Specialist Conference*, Vol. 2, June 15-19 2003, pp. 731-735.

About the Author

Yue Cao is a third-year Chancellor's Honors student with a primary major in electrical engineering and a secondary major in mathematics. Yue is an international student and lived in Dalian, China until the 10th grade, when he moved to Knoxville, Tennessee, in 2005. Yue's current research interest is power electronics with a concentration on multilevel converter interface with alternative energy resources. His research advisor is Dr. Leon Tolbert, associate professor of Department of Electrical Engineering and Computer Science (EECS). Yue is also advised by Faete Filho, a Ph.D. student in electrical engineering.

About the Advisor

Dr. Leon Tolbert is the associate department head of the Department of Electrical Engineering and Computer Science. He does research in the areas of electric power conversion, SiC power devices, multilevel converters, hybrid electric vehicles, and power quality. He is also a participating faculty member of the Graduate Automotive Technology Education (GATE) Center at UT. Dr. Tolbert is an adjunct participant at the Oak Ridge National Laboratory and conducts joint research at the National Transportation Research Center (NTRC). At UT, he has received the 2003 Engineering Research Fellow Award, the Chancellor's Citation for Professional Promise in Research and Creative Achievement in 2003, the 2004 Gonzalez Family Faculty Excellence Award in Research, and the Weston Fulton Award for Excellence in Research and Teaching in 2001.